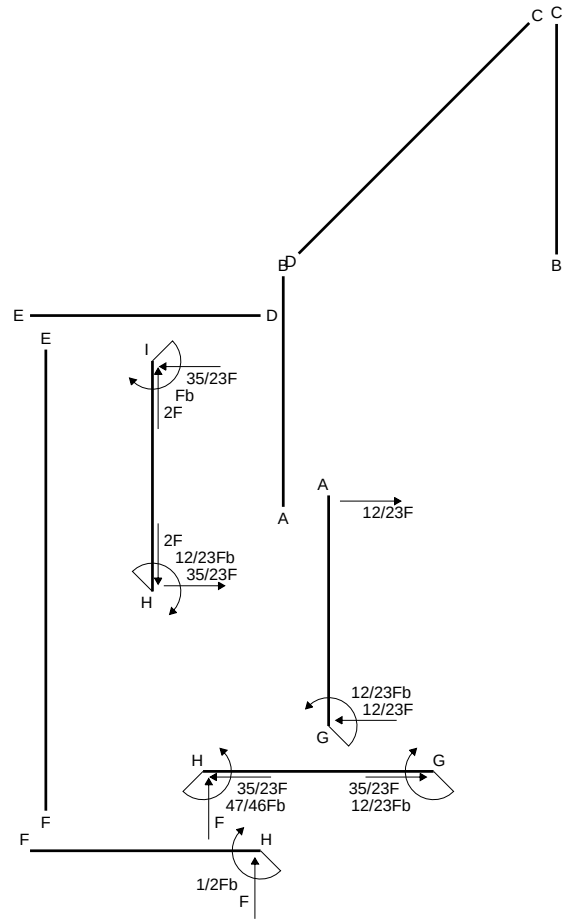
C C
B D
B
E D
E
I
35/23F
Fb
2F
A
A
12/23F
2F
12/23Fb
35/23F
H
12/23Fb
12/23F
G
H
G
35/23F
47/46Fb
35/23F
12/23Fb
F
F
F
H
1/2Fb
F

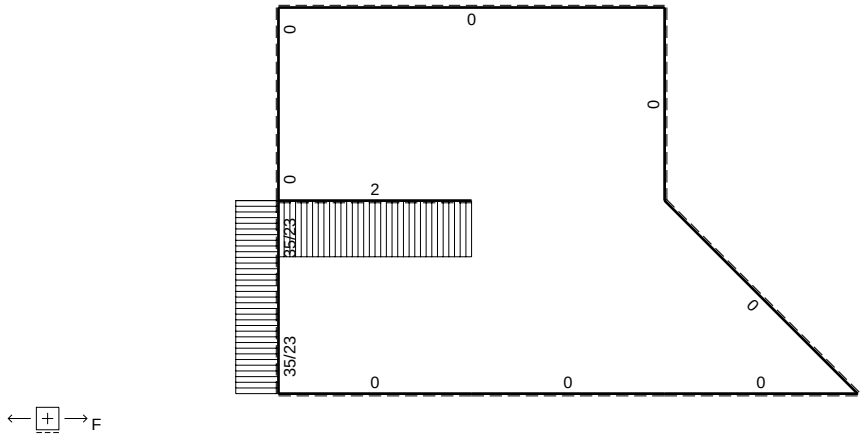
0
0
0
0
2
35/23
35/23
0
0
0
0
F

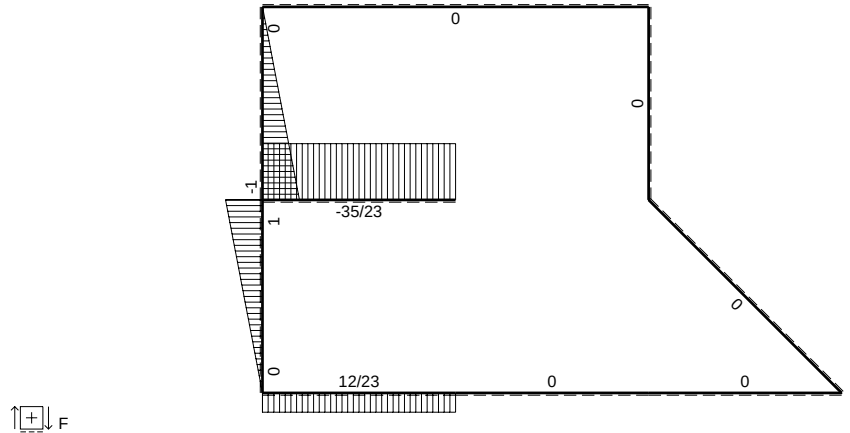
0
0
0
-1
-35/23
1
0
0
12/23
0
0
F

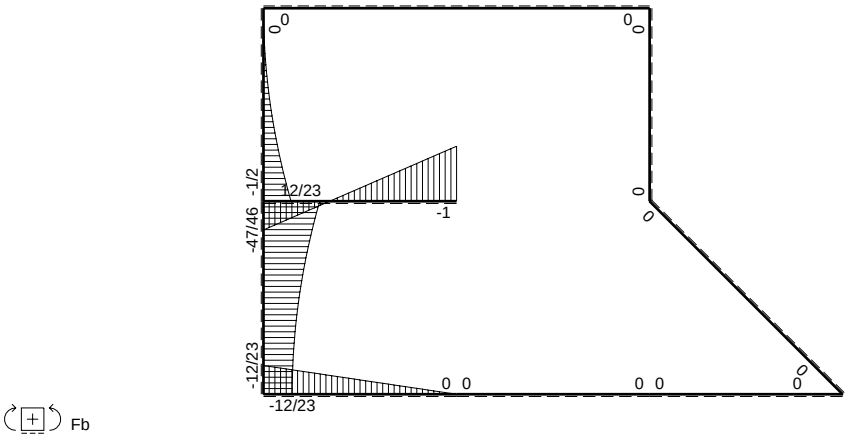
0
0
0
0
-1/2
12/23
-1
-47/46
0
0
-12/23
0 0
0 0
0
-12/23
Fb

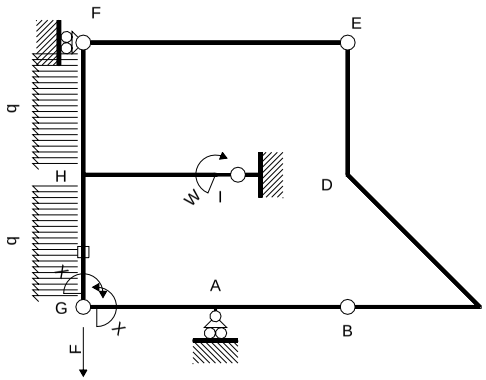

Schema di calcolo iperstatico

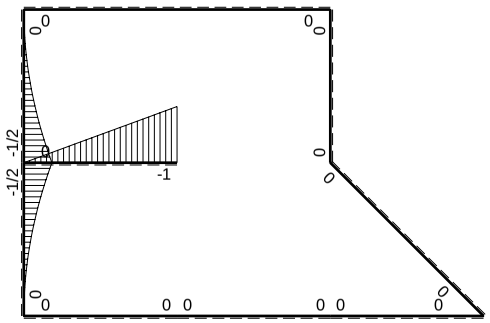

M_0 flessione da carichi assegnati

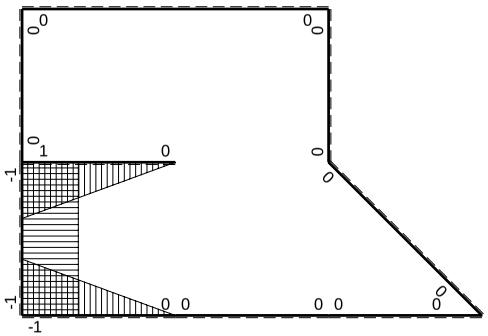

M_x flessione da iperstatica X=1

Quadro contributi PLV per iperstatica $X=W_{GA}$

→	$M_x(x)$	$M_o(x)$	M_xM_o	M_xM_x	$\int M_xM_o/EJdx$	$\int XM_xM_x/EJdx$
AB b	0	0	0	0	0	0
BA b	0	0	0	0		
BC b	0	0	0	0	0	0
CB b	0	0	0	0		
CD √2b	0	0	0	0	0	0
DE b	0	0	0	0	0	0
ED b	0	0	0	0		
EF 2b	0	0	0	0	0	0
FE 2b	0	0	0	0		
GA b	-1+x/b	0	0	$1-2x/b+x^2/b^2$	0	1/3Xb/EJ
AG b	x/b	0	0	x^2/b^2		
FH b	0	$-1/2qx^2$	0	0	0	0
HF b	0	$1/2Fb-Fx+1/2qx^2$	0	0		
HI b	1-x/b	-Fx	$-Fx+Fx^2/b$	$1-2x/b+x^2/b^2$	$-1/6Fb^2/EJ$	1/3Xb/EJ
IH b	-x/b	Fb-Fx	$-Fx+Fx^2/b$	x^2/b^2		
HG b	-1	$-1/2Fb+Fx-1/2qx^2$	$1/2Fb-Fx+1/2Fx^2/b$	1	$1/6Fb^2/EJ$	Xb/EJ
GH b	1	$1/2qx^2$	$1/2Fx^2/b$	1		
HG	elongazione asta $N_{1HG}\varepsilon_{HG}L_{HG}$				$-Fb^2/EJ$	
A	molla nodo $-V_{1A}(V_{0A}+XV_{1A})/k_A$					1/4Xb/EJ
	totali				$-Fb^2/EJ$	23/12Xb/EJ
	iperstatica $X=W_{GA}$				12/23Fb	

Sviluppi di calcolo iperstatica

$L^{XX}_{GA} = \int_o^b (1 - 2\,x/b + x^2/b^2)\ 1/EJ\ dx = [\,x - x^2/b + 1/3\,x^3/b^2\,]_o^b\ 1/EJ$

$= (\,b - b + 1/3\,b\,)\ 1/EJ = 1/3\ b/EJ$

$L^{XX}_{AG} = \int_o^b (\,x^2/b^2\,)\ 1/EJ\ dx = [1/3\,x^3/b^2\,]_o^b\ 1/EJ$

$= (1/3\,b)\ 1/EJ = 1/3\ b/EJ$

$L^{XX}_{HI} = \int_o^b (1 - 2\,x/b + x^2/b^2)\ 1/EJ\ dx = [\,x - x^2/b + 1/3\,x^3/b^2\,]_o^b\ 1/EJ$

$= (\,b - b + 1/3\,b\,)\ 1/EJ = 1/3\ b/EJ$

$L^{XX}_{IH} = \int_o^b (\,x^2/b^2\,)\ 1/EJ\ dx = [1/3\,x^3/b^2\,]_o^b\ 1/EJ$

$= (1/3\,b)\ 1/EJ = 1/3\ b/EJ$

$L^{XX}_{HG} = \int_o^b (1)\ 1/EJ\ dx = [\,x\,]_o^b\ 1/EJ$

$= (\,b\,)\ 1/EJ = b/EJ$

$L^{XX}_{GH} = \int_o^b (1)\ 1/EJ\ dx = [\,x\,]_o^b\ 1/EJ$

$= (\,b\,)\ 1/EJ = b/EJ$

$L^{Xo}_{HI} = \int_o^b (-\,x/b + x^2/b^2)\ Fb\ 1/EJ\ dx = [-1/2\,x^2/b + 1/3\,x^3/b^2\,]_o^b\ Fb\ 1/EJ$

$= (-1/2\,b + 1/3\,b\,)\ Fb\ 1/EJ = -1/6\ Fb^2/EJ$

$L^{Xo}_{IH} = \int_o^b (-\,x/b + x^2/b^2)\ Fb\ 1/EJ\ dx = [-1/2\,x^2/b + 1/3\,x^3/b^2\,]_o^b\ Fb\ 1/EJ$

$= (-1/2\,b + 1/3\,b\,)\ Fb\ 1/EJ = -1/6\ Fb^2/EJ$

$L^{Xo}_{HG} = \int_o^b (1/2 - x/b + 1/2\,x^2/b^2)\ Fb\ 1/EJ\ dx - 1\ \ (-1)\ \ (-1)\ \ Fb^2/EJ$

$= [1/2\,x - 1/2\,x^2/b + 1/6\,x^3/b^2\,]_o^b\ Fb\ 1/EJ\ -\ 1\ \ (-1)\ \ (-1)\ \ Fb^2/EJ$

$= (1/2\,b - 1/2\,b + 1/6\,b)\ Fb\ 1/EJ\ -\ 1\ \ (-1)\ \ (-1)\ \ Fb^2/EJ = -5/6\ \ Fb^2/EJ$

$L^{Xo}_{GH} = \int_o^b (1/2\,x^2/b^2)\ Fb\ 1/EJ\ dx - 1\ \ (-1)\ \ (-1)\ \ Fb^2/EJ = [1/6\,x^3/b^2\,]_o^b\ Fb\ 1/EJ\ -\ 1\ \ (-1)\ \ (-1)\ \ Fb^2/EJ$

$= (1/6\,b)\ Fb\ 1/EJ\ -\ 1\ \ (-1)\ \ (-1)\ \ Fb^2/EJ = -5/6\ \ Fb^2/EJ$

PROCEDIMENTO E RISULTATI 237316 ESΣ05.xxxx.001

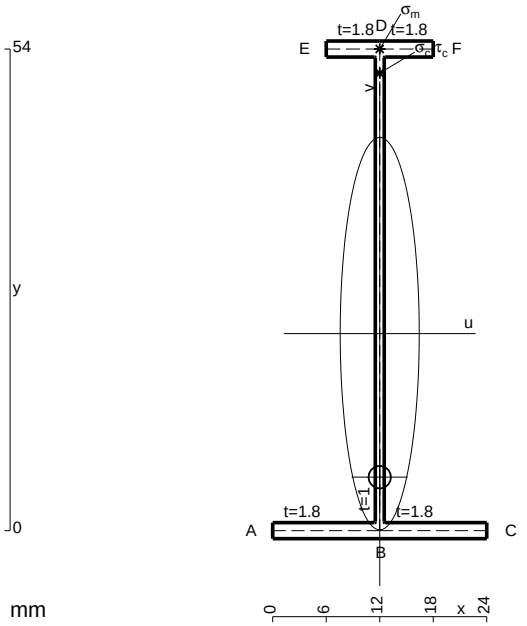

A = 118.8 mm^2
J_u = 57498. mm^4
J_v = 2333. mm^4
J_t = 87.98 mm^4
y_o = -16.09 mm
y_g = 22.09 mm
T_y = -1510. N
M_x = -377500. Nmm
x_m = 12. mm
y_m = 54. mm
v_m = 31.91 mm
$\sigma_m = -Mv/J_u$ = 209.5 N/mm^2
y_c = 2. mm
u_c = -12. mm
v_c = -20.09 mm
$\sigma_c = -Mv/J_u$ = 209.5 N/mm^2
$\tau_c = TS^*/tJ_u$ = 18.1 N/mm^2
$\tau_g = TS^*/tJ_u$ = 18.1 N/mm^2
t_c = 1510. mm
$\sigma_o = \sqrt{\sigma^2 + 3\tau^2}$ = 211.8 N/mm^2

@ Adolfo Zavelani Rossi, Politecnico di Milano, vers.27.03.13 01.12.25

ESΣ05.xxxx.001

@ Adolfo Zavelani Rossi, Politecnico di Milano, vers.27.03.13 01.12.25

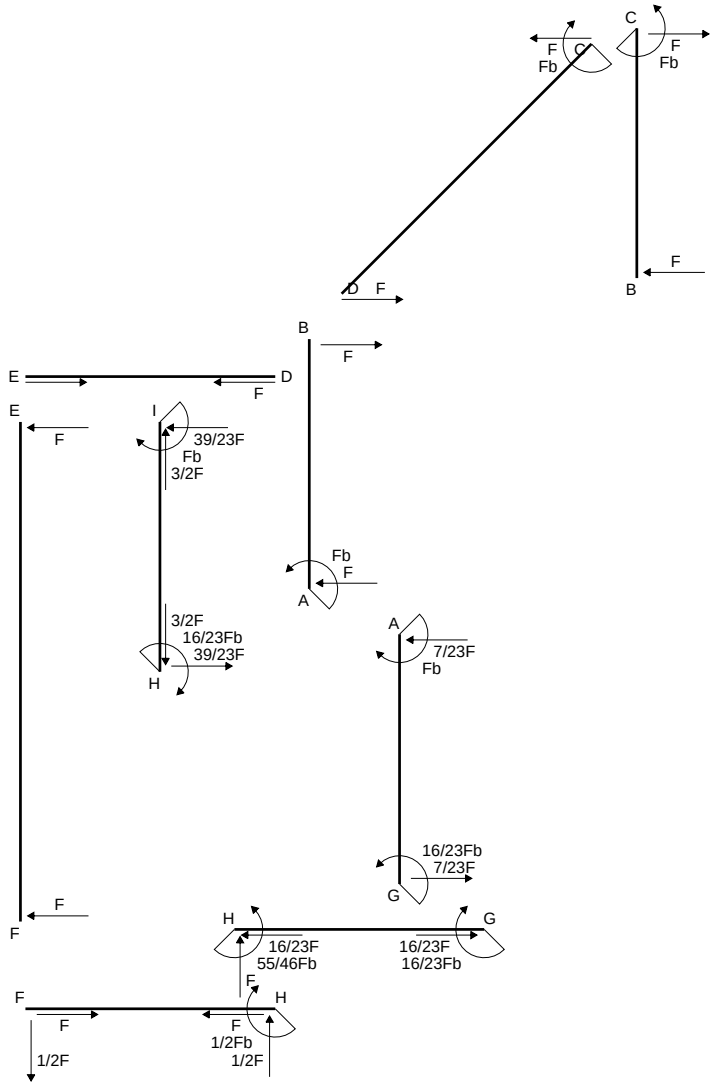
C
F
Fb
C
F
Fb
F
D
F
B
B
F
E
D
F
E
F
I
39/23F
Fb
3/2F
Fb
F
A
3/2F
16/23Fb
39/23F
H
A
7/23F
Fb
16/23Fb
7/23F
G
F
F
H
G
16/23F
55/46Fb
16/23F
16/23Fb
F
F
H
F
F
1/2Fb
1/2F
1/2F

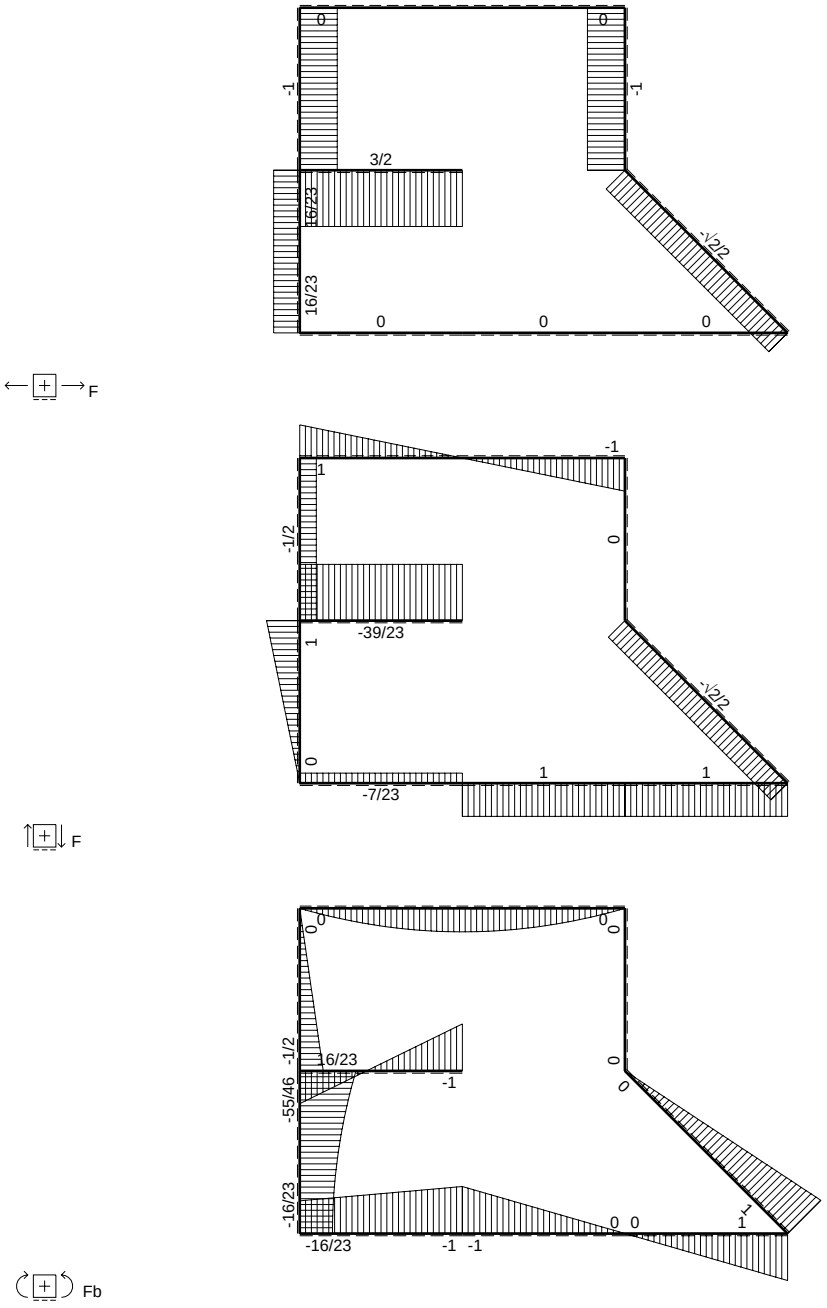
0
0
-1
-1
3/2
16/23
-√2/2
16/23
0
0
0
F
-1
1
-1/2
0
-39/23
1
-√2/2
0
-7/23
1
1
F
0
0
0
0
-1/2
16/23
-1
0
0
-55/46
-16/23
1
1
0 0
-16/23
-1 -1
Fb

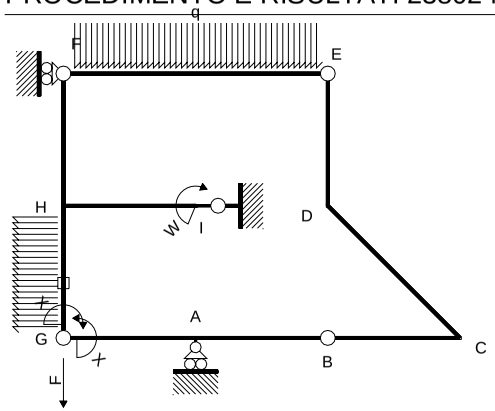

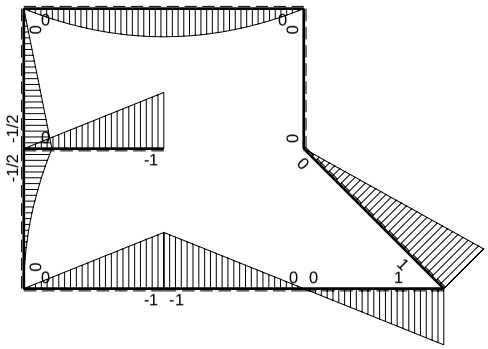

M_0 flessione da carichi assegnati

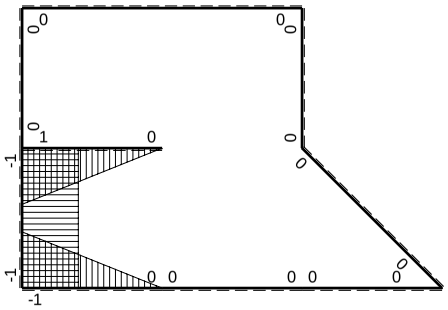

M_x flessione da iperstatica X=1

Quadro contributi PLV per iperstatica $X=W_{GA}$

→	$M_x(x)$	$M_o(x)$	M_xM_o	M_xM_x	$\int M_xM_o/EJdx$	$\int XM_xM_x/EJdx$
AB b	0	-Fb+Fx	0	0	0	0
BA b	0	Fx	0	0		
BC b	0	Fx	0	0	0	0
CB b	0	-Fb+Fx	0	0		
CD √2b	0	Fb-√2/2Fx	0	0	0	0
DE b	0	0	0	0	0	0
ED b	0	0	0	0		
EF 2b	0	$-Fx+1/2qx^2$	0	0	0	0
FE 2b	0	$Fx-1/2qx^2$	0	0		
GA b	-1+x/b	-Fx	$Fx-Fx^2/b$	$1-2x/b+x^2/b^2$	$1/6Fb^2/EJ$	1/3Xb/EJ
AG b	x/b	Fb-Fx	$Fx-Fx^2/b$	x^2/b^2		
FH b	0	-1/2Fx	0	0	0	0
HF b	0	1/2Fb-1/2Fx	0	0		
HI b	1-x/b	-Fx	$-Fx+Fx^2/b$	$1-2x/b+x^2/b^2$	$-1/6Fb^2/EJ$	1/3Xb/EJ
IH b	-x/b	Fb-Fx	$-Fx+Fx^2/b$	x^2/b^2		
HG b	-1	$-1/2Fb+Fx-1/2qx^2$	$1/2Fb-Fx+1/2Fx^2/b$	1	$1/6Fb^2/EJ$	Xb/EJ
GH b	1	$1/2qx^2$	$1/2Fx^2/b$	1		
HG	elongazione asta $N_{1HG}\varepsilon_{HG}L_{HG}$				$-Fb^2/EJ$	
A	molla nodo $-V_{1A}(V_{0A}+XV_{1A})/k_A$				$-1/2Fb^2/EJ$	1/4Xb/EJ
	totali				$-4/3Fb^2/EJ$	23/12Xb/EJ
	iperstatica $X=W_{GA}$				16/23Fb	

Sviluppi di calcolo iperstatica

$L^{XX}_{GA} = \int_o^b (1 - 2\,x/b + x^2/b^2)\ 1/EJ\ dx = [\,x - x^2/b + 1/3\,x^3/b^2\,]_o^b\ 1/EJ$

$= (\,b - b + 1/3\,b\,)\ 1/EJ = 1/3\ b/EJ$

$L^{XX}_{AG} = \int_o^b (\,x^2/b^2\,)\ 1/EJ\ dx = [1/3\,x^3/b^2\,]_o^b\ 1/EJ$

$= (1/3\,b)\ 1/EJ = 1/3\ b/EJ$

$L^{XX}_{HI} = \int_o^b (1 - 2\,x/b + x^2/b^2)\ 1/EJ\ dx = [\,x - x^2/b + 1/3\,x^3/b^2\,]_o^b\ 1/EJ$

$= (\,b - b + 1/3\,b\,)\ 1/EJ = 1/3\ b/EJ$

$L^{XX}_{IH} = \int_o^b (\,x^2/b^2\,)\ 1/EJ\ dx = [1/3\,x^3/b^2\,]_o^b\ 1/EJ$

$= (1/3\,b)\ 1/EJ = 1/3\ b/EJ$

$L^{XX}_{HG} = \int_o^b (1)\ 1/EJ\ dx = [\,x\,]_o^b\ 1/EJ$

$= (\,b\,)\ 1/EJ = b/EJ$

$L^{XX}_{GH} = \int_o^b (1)\ 1/EJ\ dx = [\,x\,]_o^b\ 1/EJ$

$= (\,b\,)\ 1/EJ = b/EJ$

$L^{Xo}_{GA} = \int_o^b (\,x/b - x^2/b^2\,)\ Fb\ 1/EJ\ dx = [1/2\,x^2/b - 1/3\,x^3/b^2\,]_o^b\ Fb\ 1/EJ$

$= (1/2\,b - 1/3\,b\,)\ Fb\ 1/EJ = 1/6\ Fb^2/EJ$

$L^{Xo}_{AG} = \int_o^b (\,x/b - x^2/b^2\,)\ Fb\ 1/EJ\ dx = [1/2\,x^2/b - 1/3\,x^3/b^2\,]_o^b\ Fb\ 1/EJ$

$= (1/2\,b - 1/3\,b\,)\ Fb\ 1/EJ = 1/6\ Fb^2/EJ$

$L^{Xo}_{HI} = \int_o^b (-\,x/b + x^2/b^2\,)\ Fb\ 1/EJ\ dx = [-1/2\,x^2/b + 1/3\,x^3/b^2\,]_o^b\ Fb\ 1/EJ$

$= (-1/2\,b + 1/3\,b\,)\ Fb\ 1/EJ = -1/6\ Fb^2/EJ$

$L^{Xo}_{IH} = \int_o^b (-\,x/b + x^2/b^2\,)\ Fb\ 1/EJ\ dx = [-1/2\,x^2/b + 1/3\,x^3/b^2\,]_o^b\ Fb\ 1/EJ$

$= (-1/2\,b + 1/3\,b\,)\ Fb\ 1/EJ = -1/6\ Fb^2/EJ$

$L^{Xo}_{HG} = \int_o^b (1/2 - x/b + 1/2\,x^2/b^2\,)\ Fb\ 1/EJ\ dx - 1\ \ (-1)\ \ (-1)\ \ Fb^2/EJ$

$= [1/2\,x - 1/2\,x^2/b + 1/6\,x^3/b^2\,]_o^b\ Fb\ 1/EJ\ -\ 1\ \ (-1)\ \ (-1)\ \ Fb^2/EJ$

$= (1/2\,b - 1/2\,b + 1/6\,b\,)\ Fb\ 1/EJ\ -\ 1\ \ (-1)\ \ (-1)\ \ Fb^2/EJ = -5/6\ \ Fb^2/EJ$

$L^{Xo}_{GH} = \int_o^b (1/2\,x^2/b^2\,)\ Fb\ 1/EJ\ dx - 1\ \ (-1)\ \ (-1)\ \ Fb^2/EJ = [1/6\,x^3/b^2\,]_o^b\ Fb\ 1/EJ\ -\ 1\ \ (-1)\ \ (-1)\ \ Fb^2/EJ$

$= (1/6\,b)\ Fb\ 1/EJ\ -\ 1\ \ (-1)\ \ (-1)\ \ Fb^2/EJ = -5/6\ \ Fb^2/EJ$

PROCEDIMENTO E RISULTATI 238024 ESΣ05.xxxx.002

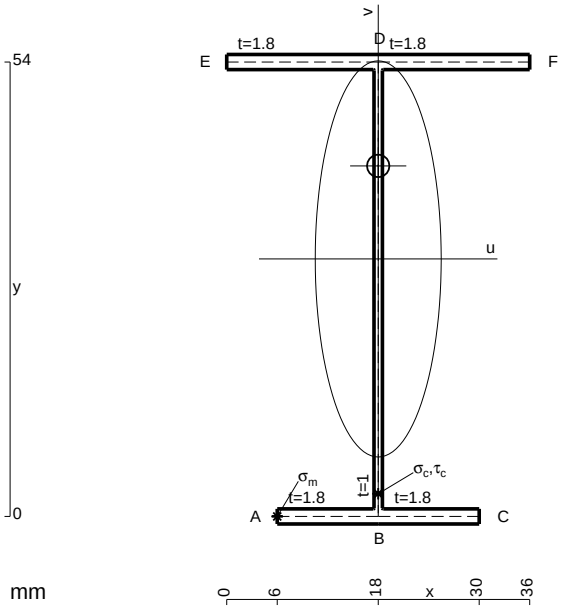

A = 162. mm^2
J_u = 89755. mm^4
J_v = 9072. mm^4
J_t = 134.6 mm^4
y_o = 11.06 mm
y_g = 30.6 mm
T_y = 1170. N
M_x = -643500. Nmm
x_m = 6. mm
u_m = -12. mm
v_m = -30.6 mm
$\sigma_m = -Mv/J_u$ = -219.4 N/mm^2
x_c = 18. mm
v_c = -30.6 mm
$\sigma_c = -Mv/J_u$ = -219.4 N/mm^2
$\tau_c = TS^*/tJ_u$ = 17.23 N/mm^2
$\tau_g = TS^*/tJ_u$ = 17.23 N/mm^2
t_c = 1170. mm
$\sigma_o = \sqrt{\sigma^2 + 3\tau^2}$ = 221.4 N/mm^2

@ Adolfo Zavelani Rossi, Politecnico di Milano, vers.27.03.13 01.12.25

ESΣ05.xxxx.002

@ Adolfo Zavelani Rossi, Politecnico di Milano, vers.27.03.13 01.12.25

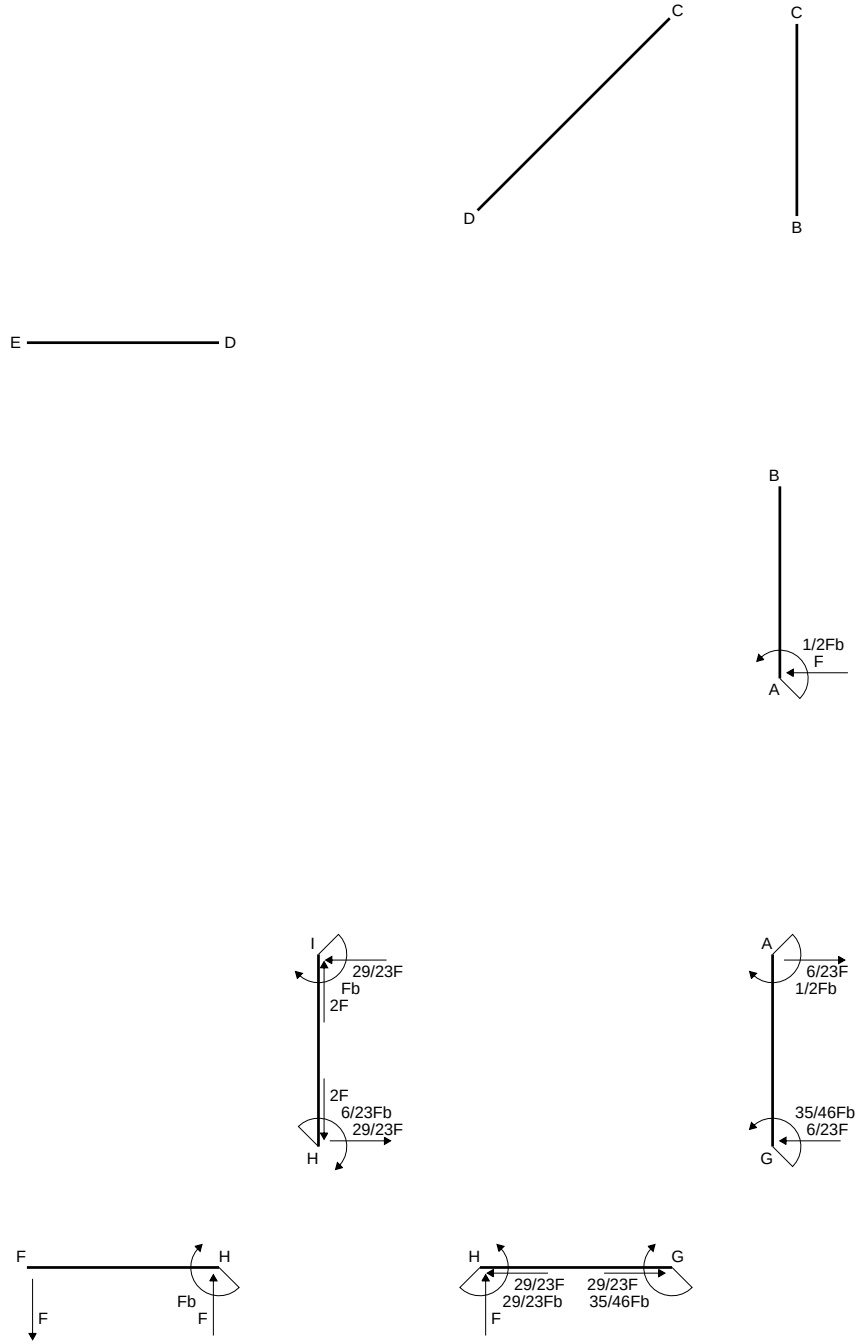
C
D
C
B
E
D
B
1/2Fb
F
A
E
F
I
29/23F
Fb
2F
2F
6/23Fb
29/23F
H
A
6/23F
1/2Fb
35/46Fb
6/23F
G
F
H
Fb
F
H
G
29/23F
29/23Fb
F
29/23F
35/46Fb

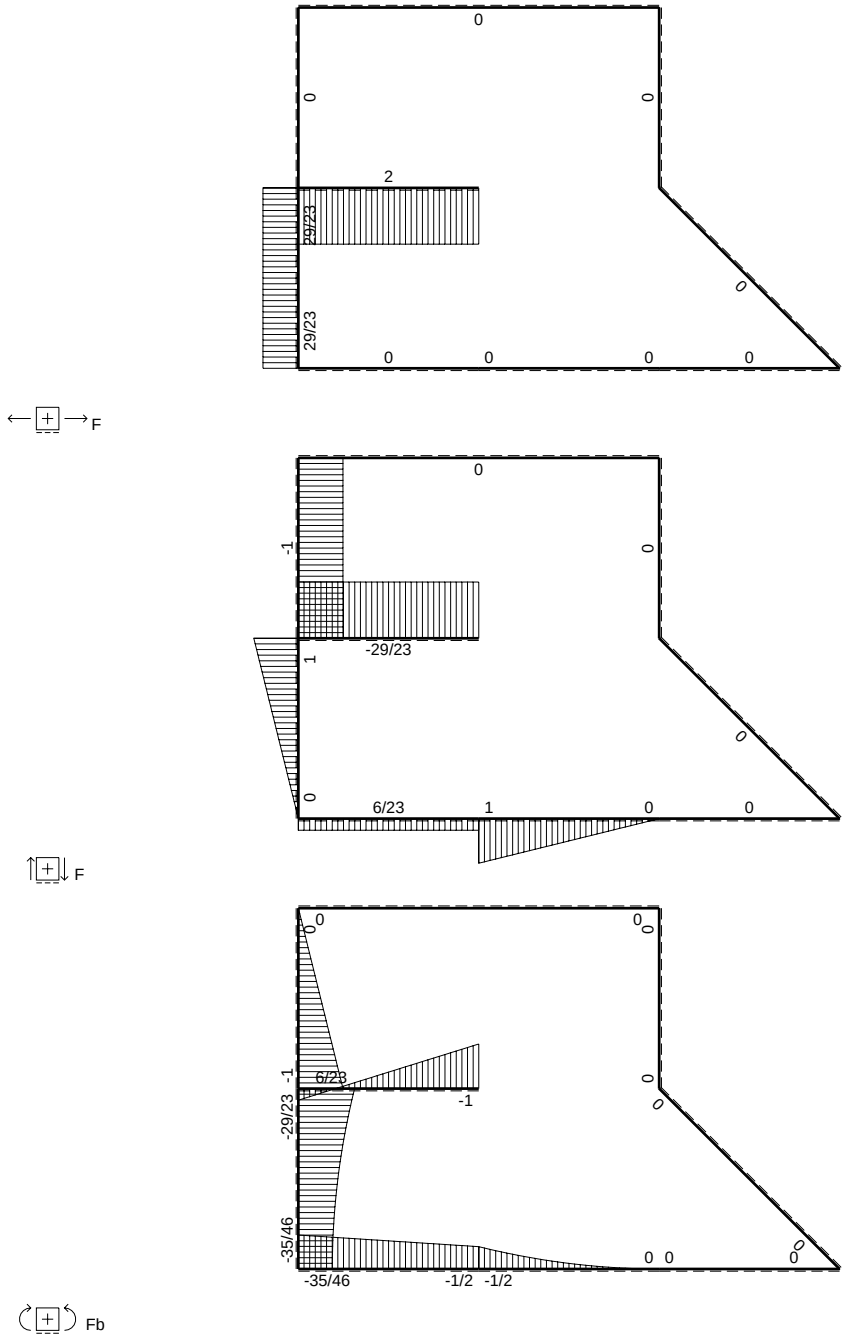
0
0
0
2
29/23
29/23
0
0
0
0
0
F
0
-1
0
-29/23
1
0
0
6/23
1
0
0
F
0
0
0
0
-1
6/23
-1
-29/23
0
0
-35/46
0 0
0
-35/46
-1/2 -1/2
Fb

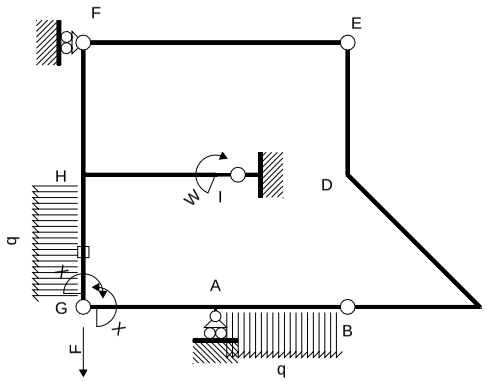

Schema di calcolo iperstatico

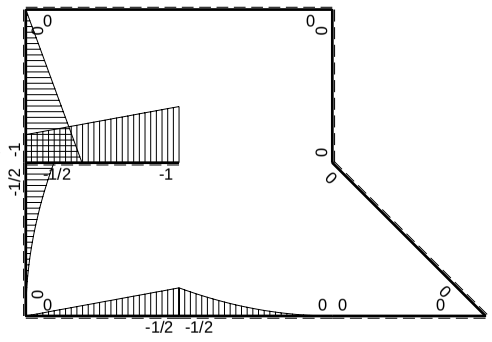

M_0 flessione da carichi assegnati

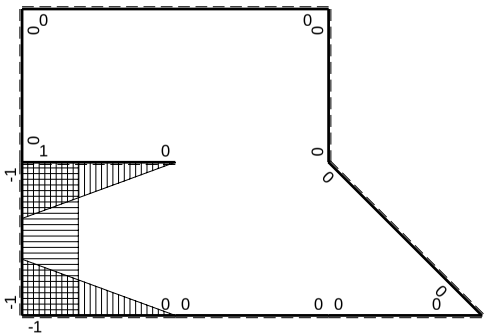

M_x flessione da iperstatica X=1

Quadro contributi PLV per iperstatica $X=W_{GA}$

→	$M_x(x)$	$M_o(x)$	M_xM_o	M_xM_x	$\int M_xM_o/EJdx$	$\int XM_xM_x/EJdx$
AB b	0	$-1/2Fb+Fx-1/2qx^2$	0	0	0	0
BA b	0	$1/2qx^2$	0	0		
BC b	0	0	0	0	0	0
CB b	0	0	0	0		
CD √2b	0	0	0	0	0	0
DE b	0	0	0	0	0	0
ED b	0	0	0	0		
EF 2b	0	0	0	0	0	0
FE 2b	0	0	0	0		
GA b	-1+x/b	-1/2Fx	$1/2Fx-1/2Fx^2/b$	$1-2x/b+x^2/b^2$	$1/12Fb^2/EJ$	$1/3Xb/EJ$
AG b	x/b	1/2Fb-1/2Fx	$1/2Fx-1/2Fx^2/b$	x^2/b^2		
FH b	0	-Fx	0	0	0	0
HF b	0	Fb-Fx	0	0		
HI b	1-x/b	-1/2Fb-1/2Fx	$-1/2Fb+1/2Fx^2/b$	$1-2x/b+x^2/b^2$	$-1/3Fb^2/EJ$	$1/3Xb/EJ$
IH b	-x/b	Fb-1/2Fx	$-Fx+1/2Fx^2/b$	x^2/b^2		
HG b	-1	$-1/2Fb+Fx-1/2qx^2$	$1/2Fb-Fx+1/2Fx^2/b$	1	$1/6Fb^2/EJ$	Xb/EJ
GH b	1	$1/2qx^2$	$1/2Fx^2/b$	1		
HG	elongazione asta $N_{1HG}\varepsilon_{HG}L_{HG}$				$-Fb^2/EJ$	
A	molla nodo $-V_{1A}(V_{0A}+XV_{1A})/k_A$				$-3/8Fb^2/EJ$	$1/4Xb/EJ$
	totali				$-35/24Fb^2/EJ$	$23/12Xb/EJ$
	iperstatica $X=W_{GA}$				35/46Fb	

Sviluppi di calcolo iperstatica

$L^{XX}_{GA} = \int_o^b (1 - 2\,x/b + x^2/b^2)\ 1/EJ\ dx = [\ x - x^2/b + 1/3\ x^3/b^2\ ]_o^b\ 1/EJ$

$= (\ b - b + 1/3\ b\ )\ 1/EJ\ = 1/3\ b/EJ$

$L^{XX}_{AG} = \int_o^b (\ x^2/b^2\ )\ 1/EJ\ dx = [1/3\ x^3/b^2\ ]_o^b\ 1/EJ$

$= (1/3\ b\ )\ 1/EJ\ = 1/3\ b/EJ$

$L^{XX}_{HI} = \int_o^b (1 - 2\,x/b + x^2/b^2)\ 1/EJ\ dx = [\ x - x^2/b + 1/3\ x^3/b^2\ ]_o^b\ 1/EJ$

$= (\ b - b + 1/3\ b\ )\ 1/EJ\ = 1/3\ b/EJ$

$L^{XX}_{IH} = \int_o^b (\ x^2/b^2\ )\ 1/EJ\ dx = [1/3\ x^3/b^2\ ]_o^b\ 1/EJ$

$= (1/3\ b\ )\ 1/EJ\ = 1/3\ b/EJ$

$L^{XX}_{HG} = \int_o^b (1\ )\ 1/EJ\ dx = [\ x\ ]_o^b\ 1/EJ$

$= (\ b\ )\ 1/EJ\ =\ b/EJ$

$L^{XX}_{GH} = \int_o^b (1\ )\ 1/EJ\ dx = [\ x\ ]_o^b\ 1/EJ$

$= (\ b\ )\ 1/EJ\ =\ b/EJ$

$L^{Xo}_{GA} = \int_o^b (1/2\ x/b - 1/2\ x^2/b^2\ )\ Fb\ 1/EJ\ dx = [1/4\ x^2/b - 1/6\ x^3/b^2\ ]_o^b\ Fb\ 1/EJ$

$= (1/4\ b - 1/6\ b\ )\ Fb\ 1/EJ\ = 1/12\ Fb^2/EJ$

$L^{Xo}_{AG} = \int_o^b (1/2\ x/b - 1/2\ x^2/b^2\ )\ Fb\ 1/EJ\ dx = [1/4\ x^2/b - 1/6\ x^3/b^2\ ]_o^b\ Fb\ 1/EJ$

$= (1/4\ b - 1/6\ b\ )\ Fb\ 1/EJ\ = 1/12\ Fb^2/EJ$

$L^{Xo}_{HI} = \int_o^b (-1/2 + 1/2\ x^2/b^2\ )\ Fb\ 1/EJ\ dx = [-1/2\ x + 1/6\ x^3/b^2\ ]_o^b\ Fb\ 1/EJ$

$= (-1/2\ b + 1/6\ b\ )\ Fb\ 1/EJ\ = -1/3\ Fb^2/EJ$

$L^{Xo}_{IH} = \int_o^b (-\ x/b + 1/2\ x^2/b^2\ )\ Fb\ 1/EJ\ dx = [-1/2\ x^2/b + 1/6\ x^3/b^2\ ]_o^b\ Fb\ 1/EJ$

$= (-1/2\ b + 1/6\ b\ )\ Fb\ 1/EJ\ = -1/3\ Fb^2/EJ$

$L^{Xo}_{HG} = \int_o^b (1/2 - x/b + 1/2\ x^2/b^2\ )\ Fb\ 1/EJ\ dx - 1\ \ (-1)\ \ (-1)\ \ Fb^2/EJ$

$= [1/2\ x - 1/2\ x^2/b + 1/6\ x^3/b^2\ ]_o^b\ Fb\ 1/EJ\ -\ 1\ \ (-1)\ \ (-1)\ \ Fb^2/EJ$

$= (1/2\ b - 1/2\ b + 1/6\ b\ )\ Fb\ 1/EJ\ -\ 1\ \ (-1)\ \ (-1)\ \ Fb^2/EJ = -5/6\ \ Fb^2/EJ$

$L^{Xo}_{GH} = \int_o^b (1/2\ x^2/b^2\ )\ Fb\ 1/EJ\ dx - 1\ \ (-1)\ \ (-1)\ \ Fb^2/EJ = [1/6\ x^3/b^2\ ]_o^b\ Fb\ 1/EJ\ -\ 1\ \ (-1)\ \ (-1)\ \ Fb^2/EJ$

$= (1/6\ b\ )\ Fb\ 1/EJ\ -\ 1\ \ (-1)\ \ (-1)\ \ Fb^2/EJ = -5/6\ \ Fb^2/EJ$

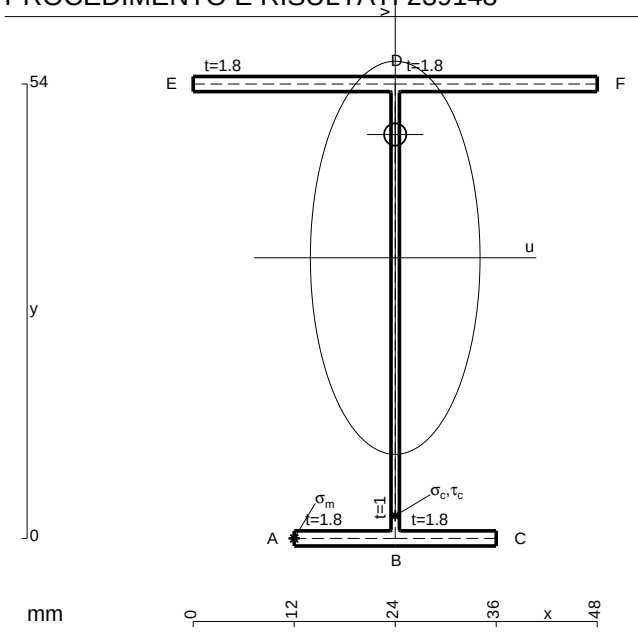

A = 183.6 mm^2
J_u = 100190. mm^4
J_v = 18662. mm^4
J_t = 158. mm^4
y_o = 14.65 mm
y_g = 33.35 mm
T_y = -1170. N
M_x = -690300. Nmm
x_m = 12. mm
u_m = -12. mm
v_m = -33.35 mm
$\sigma_m = -Mv/J_u$ = -229.8 N/mm^2
x_c = 24. mm
v_c = -33.35 mm
$\sigma_c = -Mv/J_u$ = -229.8 N/mm^2
$\tau_c = TS^*/tJ_u$ = 16.83 N/mm^2
$\tau_g = TS^*/tJ_u$ = 16.83 N/mm^2
t_c = 1170. mm
$\sigma_o = \sqrt{\sigma^2 + 3\tau^2}$ = 231.6 N/mm^2

ESΣ05.xxxx.003

@ Adolfo Zavelani Rossi, Politecnico di Milano, vers.27.03.13 01.12.25

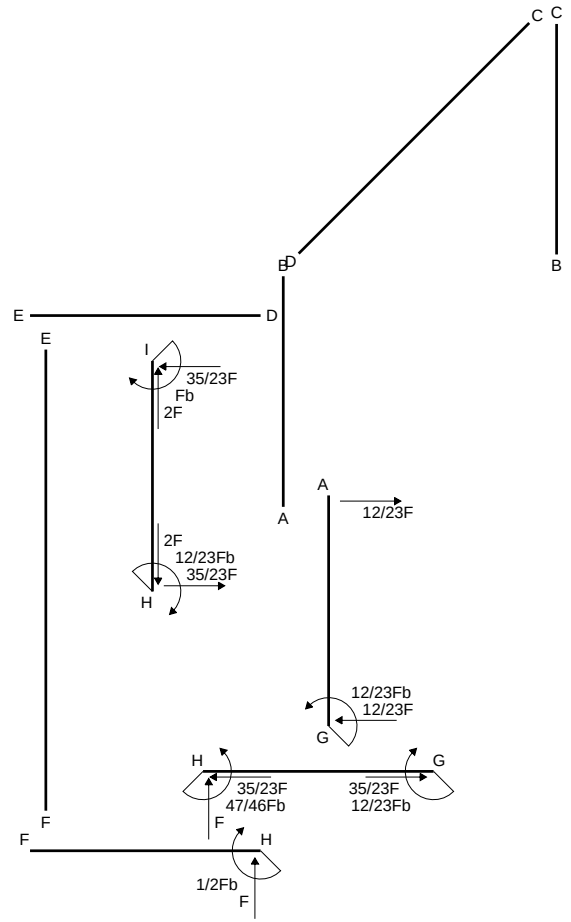
C C
B D
B
E D
E
I
35/23F
Fb
2F
A
A
12/23F
2F
12/23Fb
35/23F
H
12/23Fb
12/23F
G
H
G
35/23F
47/46Fb
35/23F
12/23Fb
F
F
F
H
1/2Fb
F

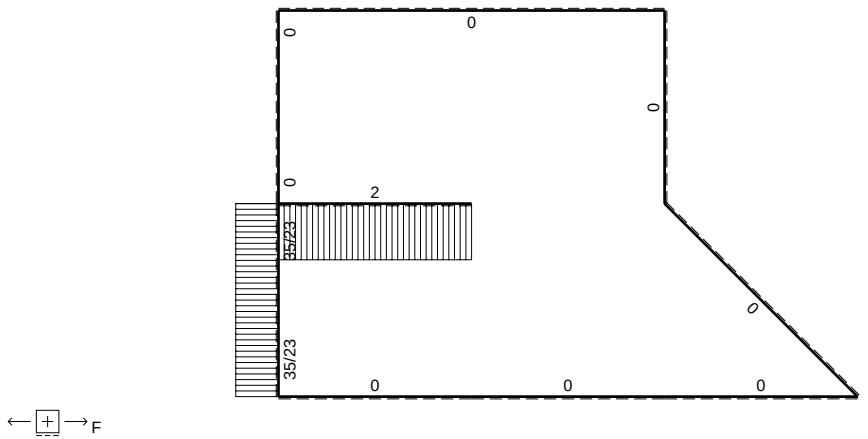
0
0
0
0
2
35/23
35/23
0
0
0
0
F

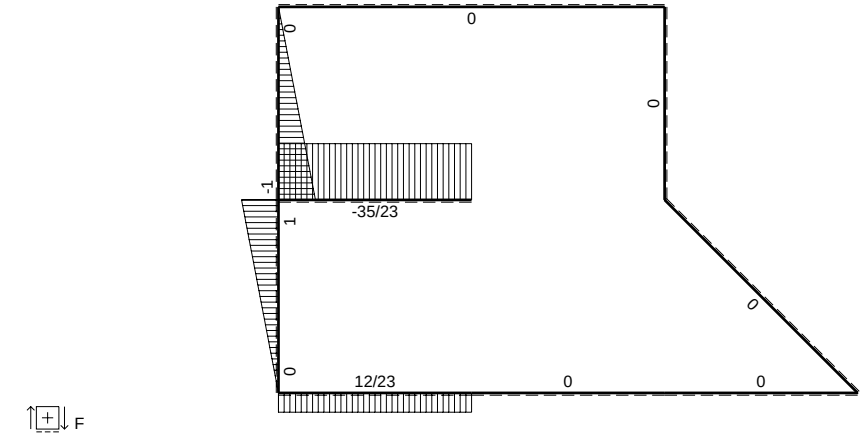
0
0
0
-1
-35/23
1
0
0
12/23
0
0
F

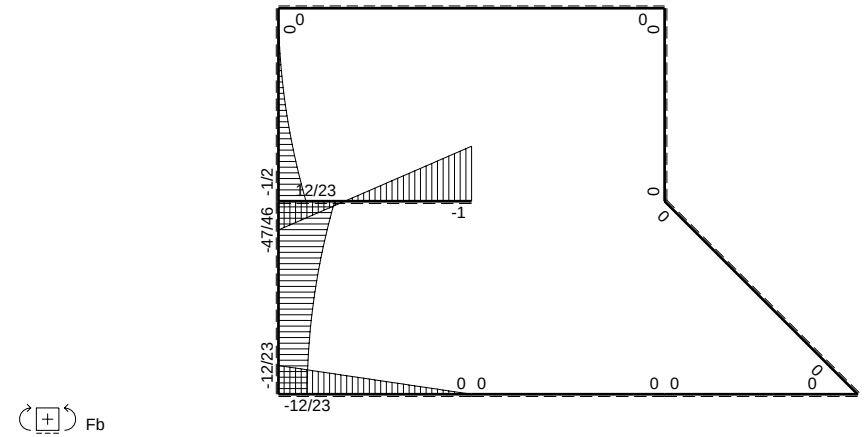
0
0
0
0
-1/2
12/23
-1
-47/46
0
0
-12/23
0 0
0 0
0
-12/23
Fb

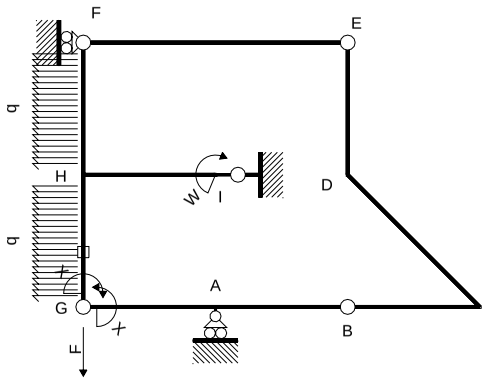

Schema di calcolo iperstatico

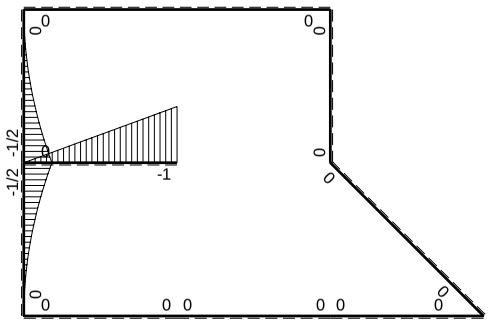

M_0 flessione da carichi assegnati

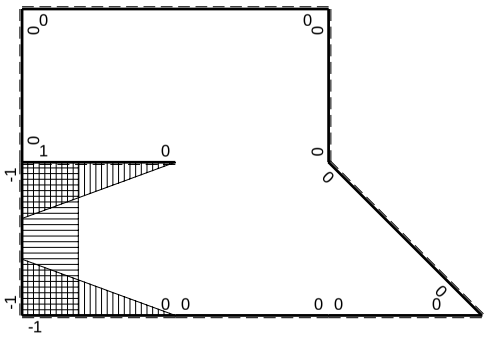

M_x flessione da iperstatica X=1

Quadro contributi PLV per iperstatica $X=W_{GA}$

→	$M_x(x)$	$M_o(x)$	M_xM_o	M_xM_x	$\int M_xM_o/EJdx$	$\int XM_xM_x/EJdx$
AB b	0	0	0	0	0	0
BA b	0	0	0	0		
BC b	0	0	0	0	0	0
CB b	0	0	0	0		
CD $\sqrt{2}$b	0	0	0	0	0	0
DE b	0	0	0	0	0	0
ED b	0	0	0	0		
EF 2b	0	0	0	0	0	0
FE 2b	0	0	0	0		
GA b	-1+x/b	0	0	$1-2x/b+x^2/b^2$	0	1/3Xb/EJ
AG b	x/b	0	0	x^2/b^2		
FH b	0	$-1/2qx^2$	0	0	0	0
HF b	0	$1/2Fb-Fx+1/2qx^2$	0	0		
HI b	1-x/b	-Fx	$-Fx+Fx^2/b$	$1-2x/b+x^2/b^2$	$-1/6Fb^2/EJ$	1/3Xb/EJ
IH b	-x/b	Fb-Fx	$-Fx+Fx^2/b$	x^2/b^2		
HG b	-1	$-1/2Fb+Fx-1/2qx^2$	$1/2Fb-Fx+1/2Fx^2/b$	1	$1/6Fb^2/EJ$	Xb/EJ
GH b	1	$1/2qx^2$	$1/2Fx^2/b$	1		
HG	elongazione asta $N_{1HG}\varepsilon_{HG}L_{HG}$				$-Fb^2/EJ$	
A	molla nodo $-V_{1A}(V_{0A}+XV_{1A})/k_A$					1/4Xb/EJ
	totali				$-Fb^2/EJ$	23/12Xb/EJ
	iperstatica $X=W_{GA}$				12/23Fb	

Sviluppi di calcolo iperstatica

$L^{XX}_{GA} = \int_o^b (1 - 2\,x/b + x^2/b^2)\ 1/EJ\ dx = [\,x - x^2/b + 1/3\,x^3/b^2\,]_o^b\ 1/EJ$

$= (\,b - b + 1/3\,b\,)\ 1/EJ = 1/3\ b/EJ$

$L^{XX}_{AG} = \int_o^b (\,x^2/b^2\,)\ 1/EJ\ dx = [1/3\,x^3/b^2\,]_o^b\ 1/EJ$

$= (1/3\,b)\ 1/EJ = 1/3\ b/EJ$

$L^{XX}_{HI} = \int_o^b (1 - 2\,x/b + x^2/b^2)\ 1/EJ\ dx = [\,x - x^2/b + 1/3\,x^3/b^2\,]_o^b\ 1/EJ$

$= (\,b - b + 1/3\,b\,)\ 1/EJ = 1/3\ b/EJ$

$L^{XX}_{IH} = \int_o^b (\,x^2/b^2\,)\ 1/EJ\ dx = [1/3\,x^3/b^2\,]_o^b\ 1/EJ$

$= (1/3\,b)\ 1/EJ = 1/3\ b/EJ$

$L^{XX}_{HG} = \int_o^b (1)\ 1/EJ\ dx = [\,x\,]_o^b\ 1/EJ$

$= (\,b\,)\ 1/EJ = b/EJ$

$L^{XX}_{GH} = \int_o^b (1)\ 1/EJ\ dx = [\,x\,]_o^b\ 1/EJ$

$= (\,b\,)\ 1/EJ = b/EJ$

$L^{Xo}_{HI} = \int_o^b (-\,x/b + x^2/b^2)\ Fb\ 1/EJ\ dx = [-1/2\,x^2/b + 1/3\,x^3/b^2\,]_o^b\ Fb\ 1/EJ$

$= (-1/2\,b + 1/3\,b\,)\ Fb\ 1/EJ = -1/6\ Fb^2/EJ$

$L^{Xo}_{IH} = \int_o^b (-\,x/b + x^2/b^2)\ Fb\ 1/EJ\ dx = [-1/2\,x^2/b + 1/3\,x^3/b^2\,]_o^b\ Fb\ 1/EJ$

$= (-1/2\,b + 1/3\,b\,)\ Fb\ 1/EJ = -1/6\ Fb^2/EJ$

$L^{Xo}_{HG} = \int_o^b (1/2 - x/b + 1/2\,x^2/b^2)\ Fb\ 1/EJ\ dx - 1\ \ (-1)\ \ (-1)\ \ Fb^2/EJ$

$= [1/2\,x - 1/2\,x^2/b + 1/6\,x^3/b^2\,]_o^b\ Fb\ 1/EJ\ -\ 1\ \ (-1)\ \ (-1)\ \ Fb^2/EJ$

$= (1/2\,b - 1/2\,b + 1/6\,b)\ Fb\ 1/EJ\ -\ 1\ \ (-1)\ \ (-1)\ \ Fb^2/EJ = -5/6\ \ Fb^2/EJ$

$L^{Xo}_{GH} = \int_o^b (1/2\,x^2/b^2)\ Fb\ 1/EJ\ dx - 1\ \ (-1)\ \ (-1)\ \ Fb^2/EJ = [1/6\,x^3/b^2\,]_o^b\ Fb\ 1/EJ\ -\ 1\ \ (-1)\ \ (-1)\ \ Fb^2/EJ$

$= (1/6\,b)\ Fb\ 1/EJ\ -\ 1\ \ (-1)\ \ (-1)\ \ Fb^2/EJ = -5/6\ \ Fb^2/EJ$

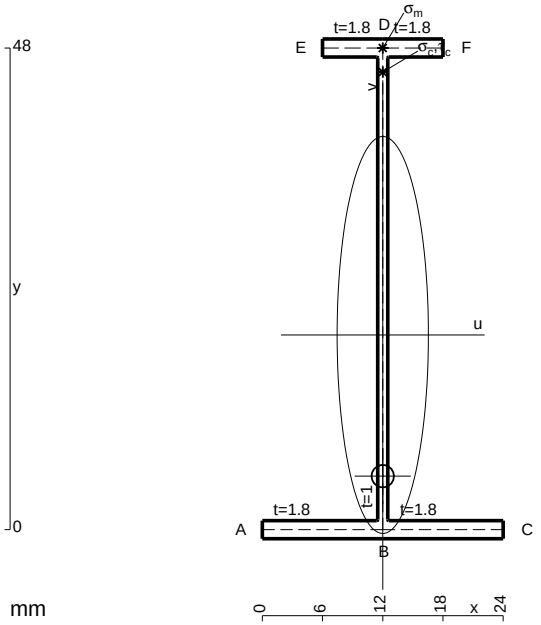

A = 112.8 mm^2
J_u = 44158. mm^4
J_v = 2333. mm^4
J_t = 85.98 mm^4
y_o = -14.07 mm
y_g = 19.4 mm
T_y = -1300. N
M_x = -370500. Nmm
x_m = 12. mm
y_m = 48. mm
v_m = 28.6 mm
$\sigma_m = -Mv/J_u$ = 239.9 N/mm^2
y_c = 2. mm
u_c = -12. mm
v_c = -17.4 mm
$\sigma_c = -Mv/J_u$ = 239.9 N/mm^2
$\tau_c = TS^*/tJ_u$ = 18.18 N/mm^2
$\tau_g = TS^*/tJ_u$ = 18.18 N/mm^2
t_c = 1300. mm
$\sigma_o = \sqrt{\sigma^2 + 3\tau^2}$ = 242. N/mm^2

ESΣ05.xxxx.004

@ Adolfo Zavelani Rossi, Politecnico di Milano, vers.27.03.13 01.12.25

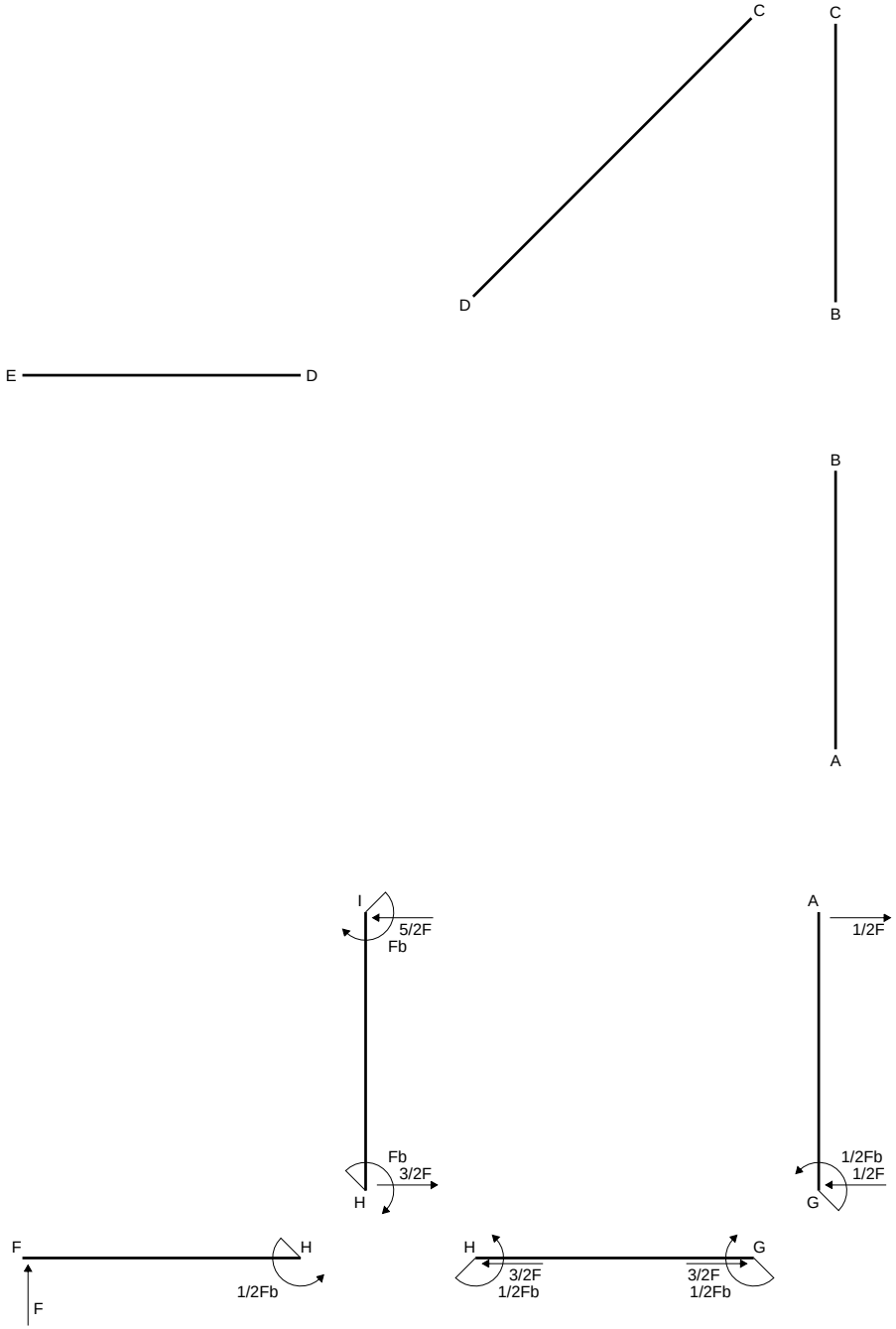
C
C
D
B
E
D
B
E
A
F
I
5/2F
Fb
A
1/2F
Fb
3/2F
H
1/2Fb
1/2F
G
F
H
1/2Fb
F
H
G
3/2F
1/2Fb
3/2F
1/2Fb

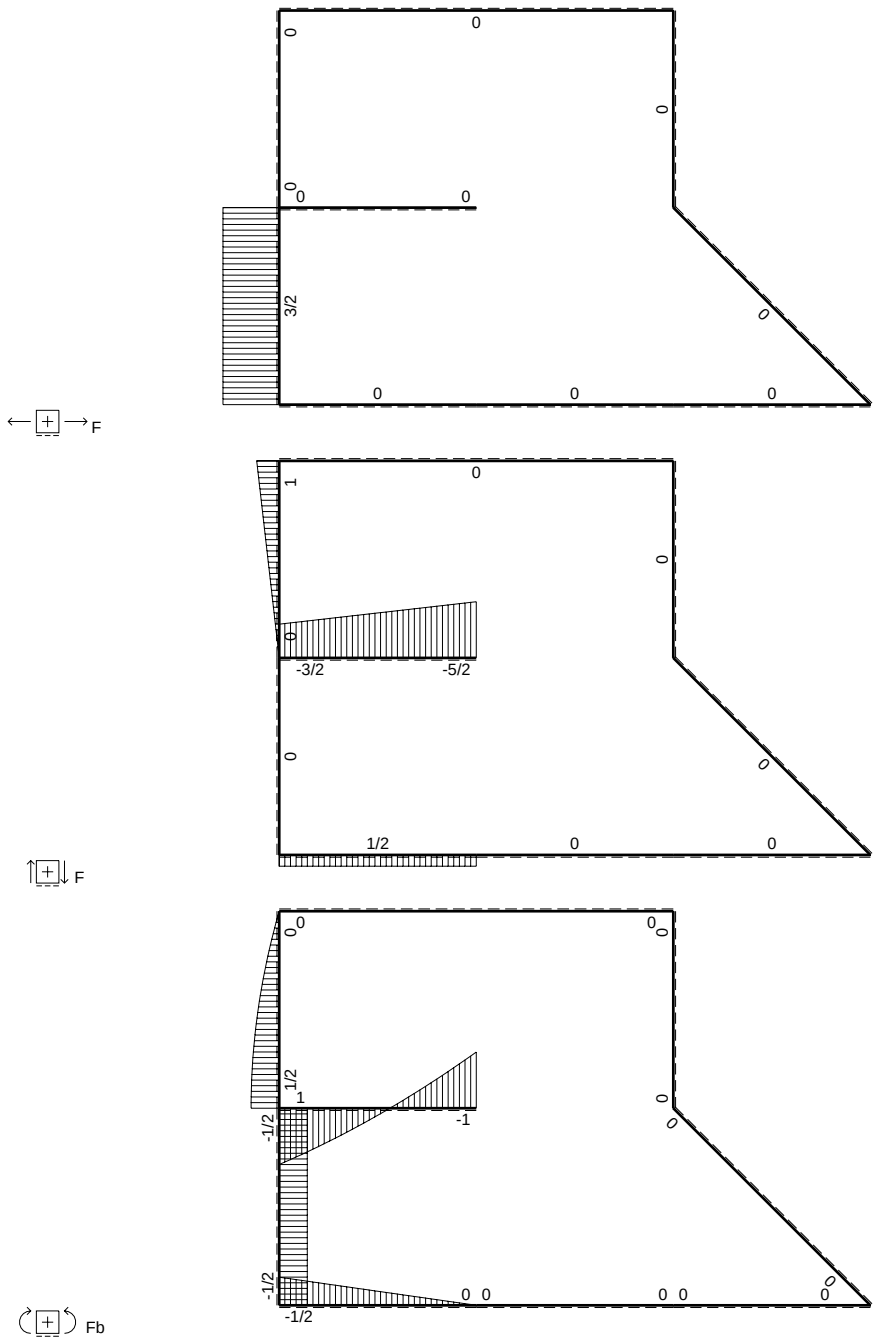
F
F
Fb

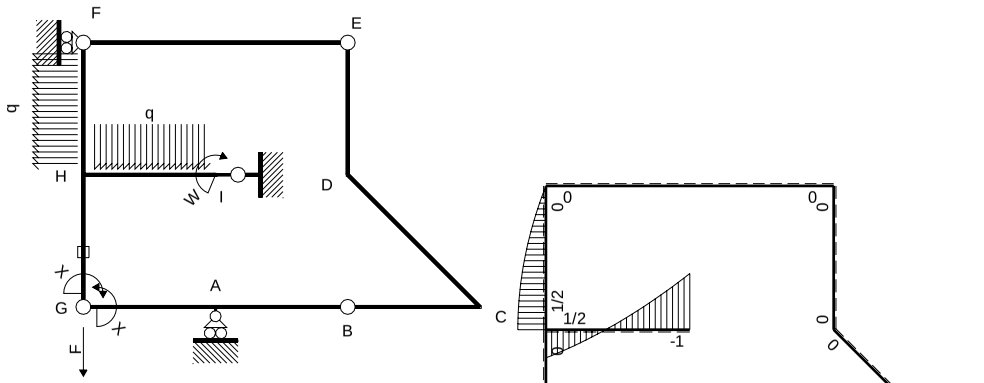

Schema di calcolo iperstatico

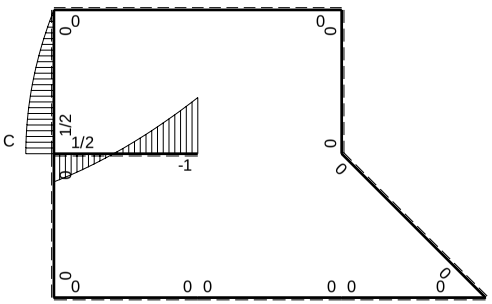

M_0 flessione da carichi assegnati

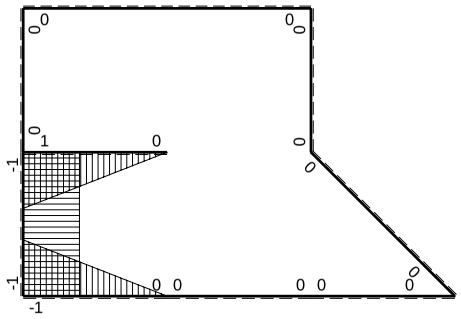

M_x flessione da iperstatica X=1

PROCEDIMENTO E RISULTATI 238304 ESΣ05.xxxx.005

@ Adolfo Zavelani Rossi, Politecnico di Milano, vers.27.03.13 01.12.25

Quadro contributi PLV per iperstatica $X=W_{GA}$

→	$M_x(x)$	$M_o(x)$	M_xM_o	M_xM_x	$\int M_xM_o/EJdx$	$\int XM_xM_x/EJdx$
AB b	0	0	0	0	0	0
BA b	0	0	0	0		
BC b	0	0	0	0	0	0
CB b	0	0	0	0		
CD √2b	0	0	0	0	0	0
DE b	0	0	0	0	0	0
ED b	0	0	0	0		
EF 2b	0	0	0	0	0	0
FE 2b	0	0	0	0		
GA b	-1+x/b	0	0	$1-2x/b+x^2/b^2$	0	1/3Xb/EJ
AG b	x/b	0	0	x^2/b^2		
FH b	0	$Fx-1/2qx^2$	0	0	0	0
HF b	0	$-1/2Fb+1/2qx^2$	0	0		
HI b	1-x/b	$1/2Fb-Fx-1/2qx^2$	$1/2Fb-3/2Fx+1/2Fx^2/b+1/2qx^3/b$	$1-2x/b+x^2/b^2$	$1/24Fb^2/EJ$	1/3Xb/EJ
IH b	-x/b	$Fb-2Fx+1/2qx^2$	$-Fx+2Fx^2/b-1/2qx^3/b$	x^2/b^2		
HG b	-1	0	0	1	0	Xb/EJ
GH b	1	0	0	1		
HG	elongazione asta $N_{1HG}\varepsilon_{HG}L_{HG}$				$-Fb^2/EJ$	
A	molla nodo $-V_{1A}(V_{oA}+XV_{1A})/k_A$					1/4Xb/EJ
	totali				$-23/24Fb^2/EJ$	23/12Xb/EJ
	iperstatica $X=W_{GA}$				1/2Fb	

PROCEDIMENTO E RISULTATI 238304 ESΣ05.xxxx.005

Sviluppi di calcolo iperstatica

@ Adolfo Zavelani Rossi, Politecnico di Milano, vers.27.03.13 01.12.25

$L^{XX}_{GA} = \int_o^b (1 - 2\,x/b + x^2/b^2)\ 1/EJ\ dx = [\,x - x^2/b + 1/3\,x^3/b^2\,]_o^b\ 1/EJ$

$= (\,b - b + 1/3\,b\,)\ 1/EJ\ = 1/3\ b/EJ$

$L^{XX}_{AG} = \int_o^b (\,x^2/b^2\,)\ 1/EJ\ dx = [1/3\,x^3/b^2\,]_o^b\ 1/EJ$

$= (1/3\,b\,)\ 1/EJ\ = 1/3\ b/EJ$

$L^{XX}_{HI} = \int_o^b (1 - 2\,x/b + x^2/b^2)\ 1/EJ\ dx = [\,x - x^2/b + 1/3\,x^3/b^2\,]_o^b\ 1/EJ$

$= (\,b - b + 1/3\,b\,)\ 1/EJ\ = 1/3\ b/EJ$

$L^{XX}_{IH} = \int_o^b (\,x^2/b^2\,)\ 1/EJ\ dx = [1/3\,x^3/b^2\,]_o^b\ 1/EJ$

$= (1/3\,b\,)\ 1/EJ\ = 1/3\ b/EJ$

$L^{XX}_{HG} = \int_o^b (1)\ 1/EJ\ dx = [\,x\,]_o^b\ 1/EJ$

$= (\,b\,)\ 1/EJ\ =\ b/EJ$

$L^{XX}_{GH} = \int_o^b (1)\ 1/EJ\ dx = [\,x\,]_o^b\ 1/EJ$

$= (\,b\,)\ 1/EJ\ =\ b/EJ$

$L^{Xo}_{HI} = \int_o^b (1/2 - 3/2\,x/b + 1/2\,x^2/b^2 + 1/2\,x^3/b^3\,)\ Fb\ 1/EJ\ dx$

$= [1/2\,x - 3/4\,x^2/b + 1/6\,x^3/b^2 + 1/8\,x^4/b^3\,]_o^b\ Fb\ 1/EJ$

$= (1/2\,b - 3/4\,b + 1/6\,b + 1/8\,b\,)\ Fb\ 1/EJ\ = 1/24\ Fb^2/EJ$

$L^{Xo}_{IH} = \int_o^b (-\,x/b + 2\,x^2/b^2 - 1/2\,x^3/b^3\,)\ Fb\ 1/EJ\ dx = [-1/2\,x^2/b + 2/3\,x^3/b^2 - 1/8\,x^4/b^3\,]_o^b\ Fb\ 1/EJ$

$= (-1/2\,b + 2/3\,b - 1/8\,b\,)\ Fb\ 1/EJ\ = 1/24\ Fb^2/EJ$

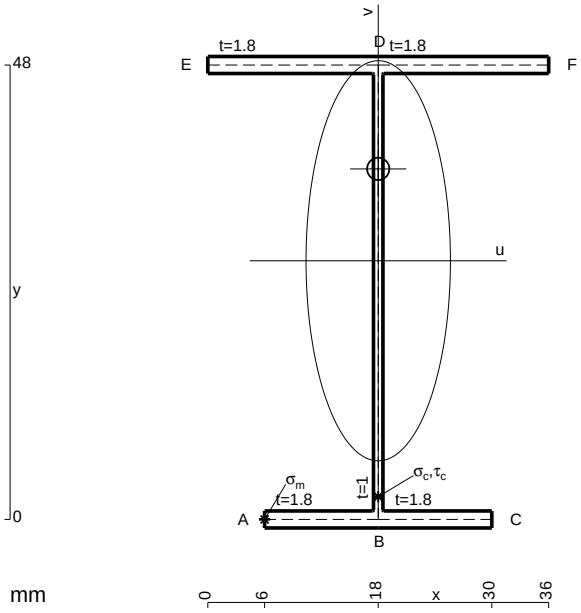

A = 156. mm^2
J_u = 69701. mm^4
J_v = 9072. mm^4
J_t = 132.6 mm^4
y_o = 9.705 mm
y_g = 27.32 mm
T_y = 1115. N
M_x = 510113. Nmm
x_m = 6. mm
u_m = -12. mm
v_m = -27.32 mm
$\sigma_m = -Mv/J_u$ = 200. N/mm^2
x_c = 18. mm
v_c = -27.32 mm
$\sigma_c = -Mv/J_u$ = 200. N/mm^2
$\tau_c = TS^*/tJ_u$ = 18.88 N/mm^2
$\tau_g = TS^*/tJ_u$ = 18.88 N/mm^2
t_c = 2230. mm
$\sigma_o = \sqrt{\sigma^2 + 3\tau^2}$ = 202.6 N/mm^2

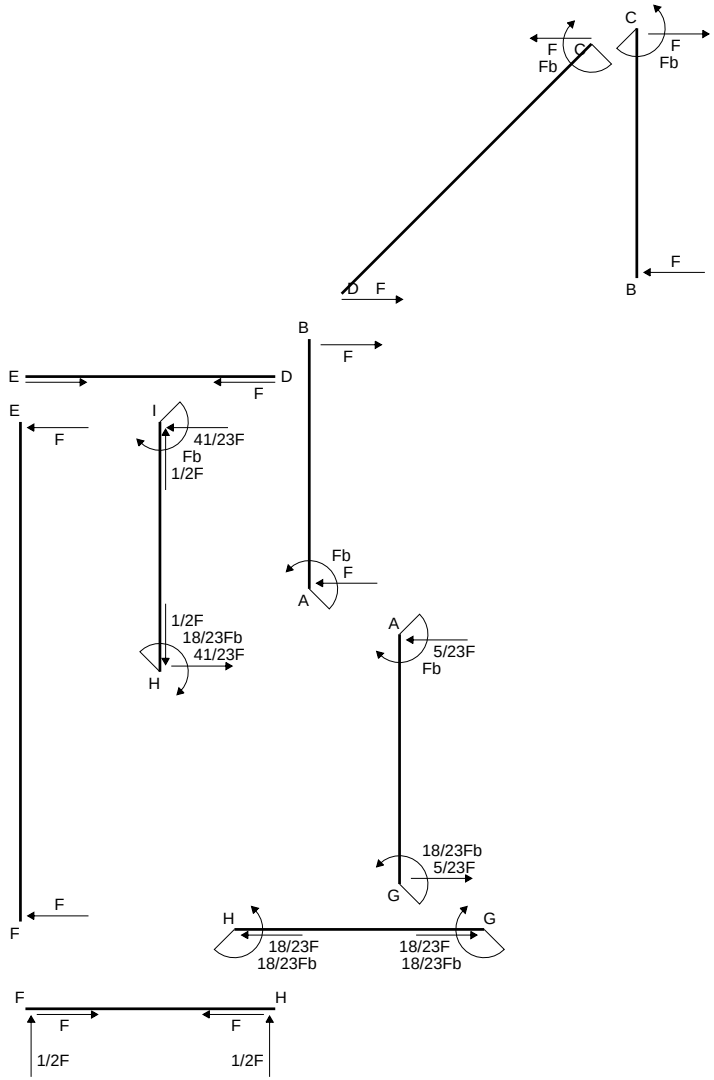
C
F
Fb
C
F
Fb
D
F
B
F
B
F
E
D
F
E
F
I
41/23F
Fb
1/2F
Fb
F
A
1/2F
18/23Fb
41/23F
H
A
5/23F
Fb
18/23Fb
5/23F
G
F
F
H
G
18/23F
18/23Fb
18/23F
18/23Fb
F
H
F
F
1/2F
1/2F

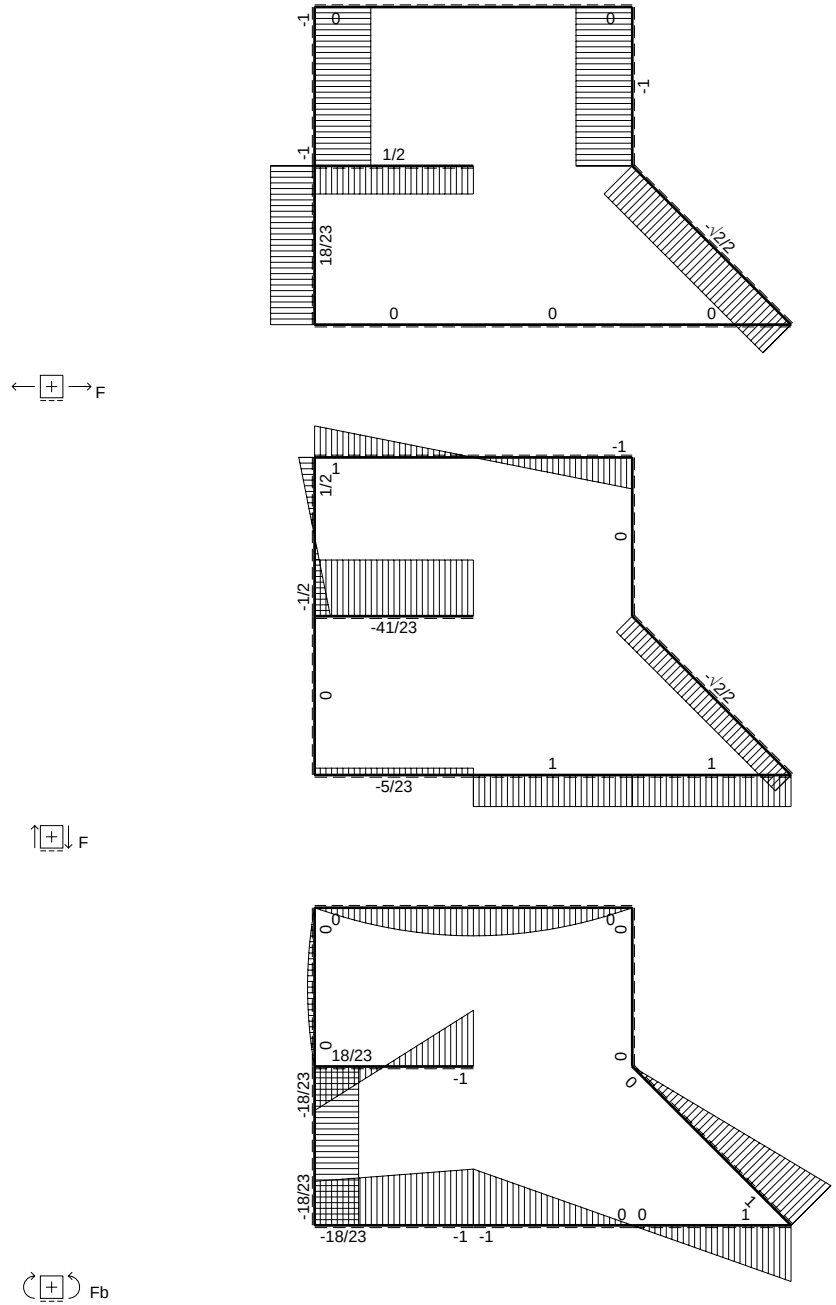
-1
0
0
-1
-1
1/2
18/23
-√2/2
0
0
0
F
-1
1
1/2
0
-1/2
-41/23
0
-√2/2
1
1
-5/23
F
0
0
0
0
0
18/23
-1
0
0
-18/23
-18/23
-18/23
-1
-1
0
0
1
1
Fb

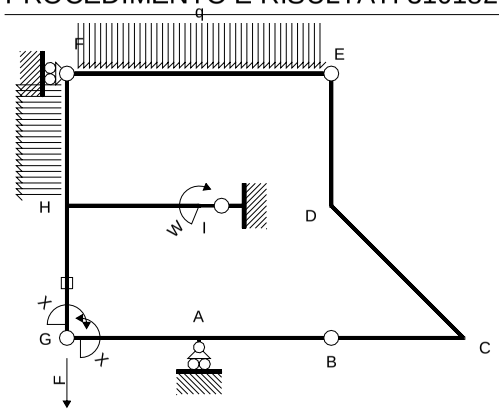

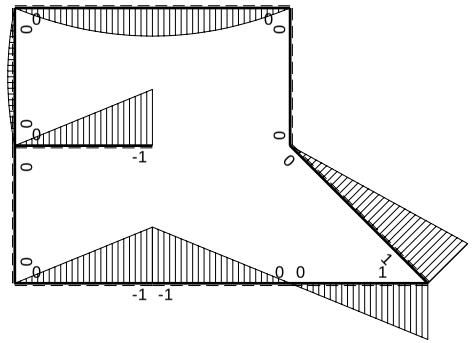

M_0 flessione da carichi assegnati

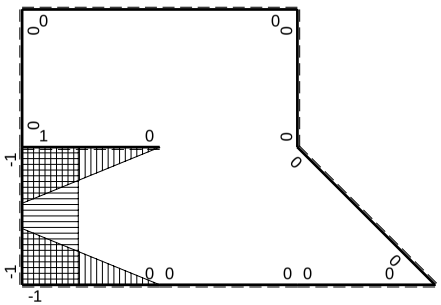

M_x flessione da iperstatica X=1

Quadro contributi PLV per iperstatica $X=W_{GA}$

→	$M_x(x)$	$M_0(x)$	M_xM_0	M_xM_x	$\int M_xM_0/EJdx$	$\int XM_xM_x/EJdx$
AB b	0	-Fb+Fx	0	0	0	0
BA b	0	Fx	0	0		
BC b	0	Fx	0	0	0	0
CB b	0	-Fb+Fx	0	0		
CD √2b	0	Fb-√2/2Fx	0	0	0	0
DE b	0	0	0	0	0	0
ED b	0	0	0	0		
EF 2b	0	$-Fx+1/2qx^2$	0	0	0	0
FE 2b	0	$Fx-1/2qx^2$	0	0		
GA b	-1+x/b	-Fx	$Fx-Fx^2/b$	$1-2x/b+x^2/b^2$	$1/6Fb^2/EJ$	1/3Xb/EJ
AG b	x/b	Fb-Fx	$Fx-Fx^2/b$	x^2/b^2		
FH b	0	$1/2Fx-1/2qx^2$	0	0	0	0
HF b	0	$-1/2Fx+1/2qx^2$	0	0		
HI b	1-x/b	-Fx	$-Fx+Fx^2/b$	$1-2x/b+x^2/b^2$	$-1/6Fb^2/EJ$	1/3Xb/EJ
IH b	-x/b	Fb-Fx	$-Fx+Fx^2/b$	x^2/b^2		
HG b	-1	0	0	1	0	Xb/EJ
GH b	1	0	0	1		
HG	elongazione asta $N_{1HG}\varepsilon_{HG}L_{HG}$				$-Fb^2/EJ$	
A	molla nodo $-V_{1A}(V_{0A}+XV_{1A})/k_A$				$-1/2Fb^2/EJ$	1/4Xb/EJ
	totali				$-3/2Fb^2/EJ$	23/12Xb/EJ
	iperstatica $X=W_{GA}$				18/23Fb	

Sviluppi di calcolo iperstatica

$L^{XX}_{GA} = \int_o^b (1 - 2\,x/b + x^2/b^2)\ 1/EJ\ dx = [\,x - x^2/b + 1/3\,x^3/b^2\,]_o^b\ 1/EJ$

$= (\,b - b + 1/3\,b\,)\ 1/EJ = 1/3\ b/EJ$

$L^{XX}_{AG} = \int_o^b (\,x^2/b^2\,)\ 1/EJ\ dx = [1/3\,x^3/b^2\,]_o^b\ 1/EJ$

$= (1/3\,b\,)\ 1/EJ = 1/3\ b/EJ$

$L^{XX}_{HI} = \int_o^b (1 - 2\,x/b + x^2/b^2)\ 1/EJ\ dx = [\,x - x^2/b + 1/3\,x^3/b^2\,]_o^b\ 1/EJ$

$= (\,b - b + 1/3\,b\,)\ 1/EJ = 1/3\ b/EJ$

$L^{XX}_{IH} = \int_o^b (\,x^2/b^2\,)\ 1/EJ\ dx = [1/3\,x^3/b^2\,]_o^b\ 1/EJ$

$= (1/3\,b\,)\ 1/EJ = 1/3\ b/EJ$

$L^{XX}_{HG} = \int_o^b (1)\ 1/EJ\ dx = [\,x\,]_o^b\ 1/EJ$

$= (\,b\,)\ 1/EJ = b/EJ$

$L^{XX}_{GH} = \int_o^b (1)\ 1/EJ\ dx = [\,x\,]_o^b\ 1/EJ$

$= (\,b\,)\ 1/EJ = b/EJ$

$L^{Xo}_{GA} = \int_o^b (\,x/b - x^2/b^2\,)\ Fb\ 1/EJ\ dx = [1/2\,x^2/b - 1/3\,x^3/b^2\,]_o^b\ Fb\ 1/EJ$

$= (1/2\,b - 1/3\,b\,)\ Fb\ 1/EJ = 1/6\ Fb^2/EJ$

$L^{Xo}_{AG} = \int_o^b (\,x/b - x^2/b^2\,)\ Fb\ 1/EJ\ dx = [1/2\,x^2/b - 1/3\,x^3/b^2\,]_o^b\ Fb\ 1/EJ$

$= (1/2\,b - 1/3\,b\,)\ Fb\ 1/EJ = 1/6\ Fb^2/EJ$

$L^{Xo}_{HI} = \int_o^b (-\,x/b + x^2/b^2\,)\ Fb\ 1/EJ\ dx = [-1/2\,x^2/b + 1/3\,x^3/b^2\,]_o^b\ Fb\ 1/EJ$

$= (-1/2\,b + 1/3\,b\,)\ Fb\ 1/EJ = -1/6\ Fb^2/EJ$

$L^{Xo}_{IH} = \int_o^b (-\,x/b + x^2/b^2\,)\ Fb\ 1/EJ\ dx = [-1/2\,x^2/b + 1/3\,x^3/b^2\,]_o^b\ Fb\ 1/EJ$

$= (-1/2\,b + 1/3\,b\,)\ Fb\ 1/EJ = -1/6\ Fb^2/EJ$

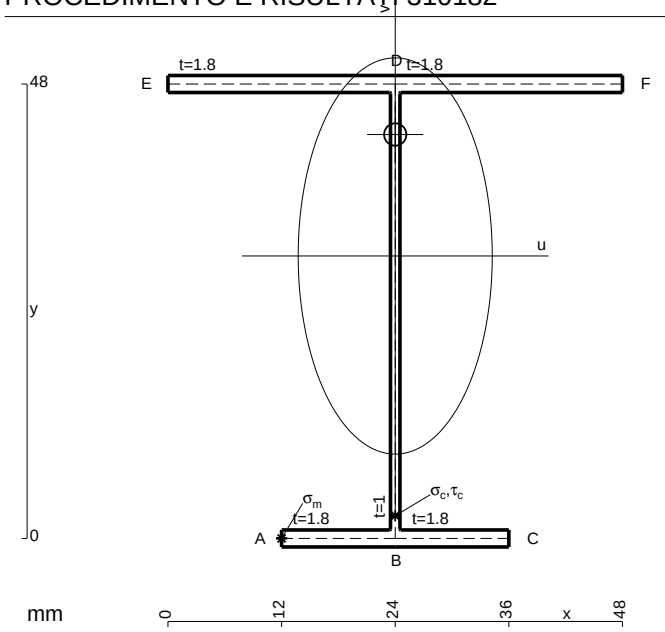

$A = 177.6\ mm^2$
$J_u = 77813.\ mm^4$
$J_v = 18662.\ mm^4$
$J_t = 156.\ mm^4$
$y_o = 12.83\ mm$
$y_g = 29.84\ mm$
$T_y = 840.\ N$
$M_x = -546000.\ Nmm$
$x_m = 12.\ mm$
$u_m = -12.\ mm$
$v_m = -29.84\ mm$
$\sigma_m = -Mv/J_u = -209.4\ N/mm^2$
$x_c = 24.\ mm$
$v_c = -29.84\ mm$
$\sigma_c = -Mv/J_u = -209.4\ N/mm^2$
$\tau_c = TS^*/tJ_u = 13.91\ N/mm^2$
$\tau_g = TS^*/tJ_u = 13.91\ N/mm^2$
$t_c = 840.\ mm$
$\sigma_o = \sqrt{\sigma^2 + 3\tau^2} = 210.8\ N/mm^2$

ESΣ05.xxxx.006

@ Adolfo Zavelani Rossi, Politecnico di Milano, vers.27.03.13 01.12.25

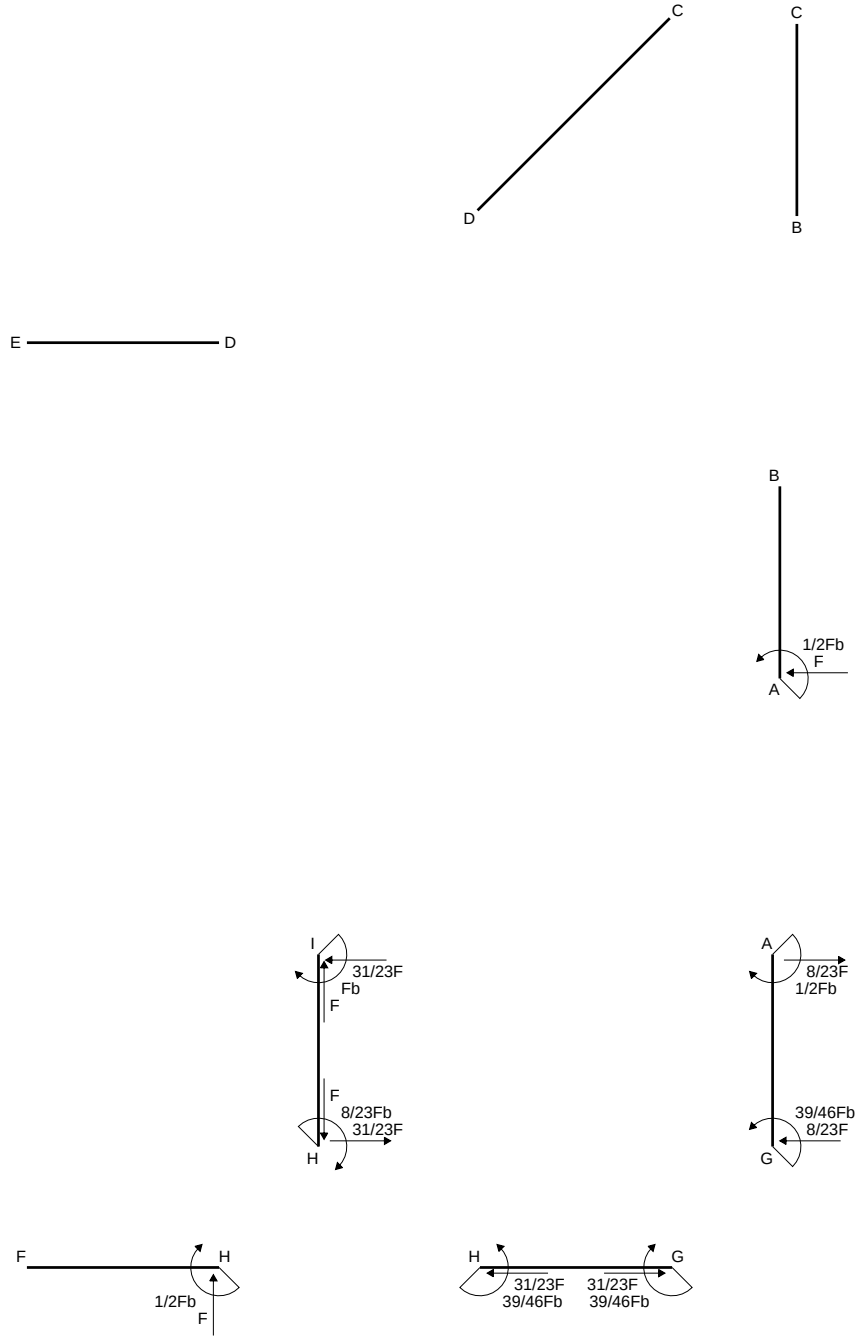
C
D
C
B
E
D
B
1/2Fb
F
A
E
F
I
31/23F
Fb
F
F
8/23Fb
31/23F
H
A
8/23F
1/2Fb
39/46Fb
8/23F
G
F
H
1/2Fb
F
H
G
31/23F
39/46Fb
31/23F
39/46Fb

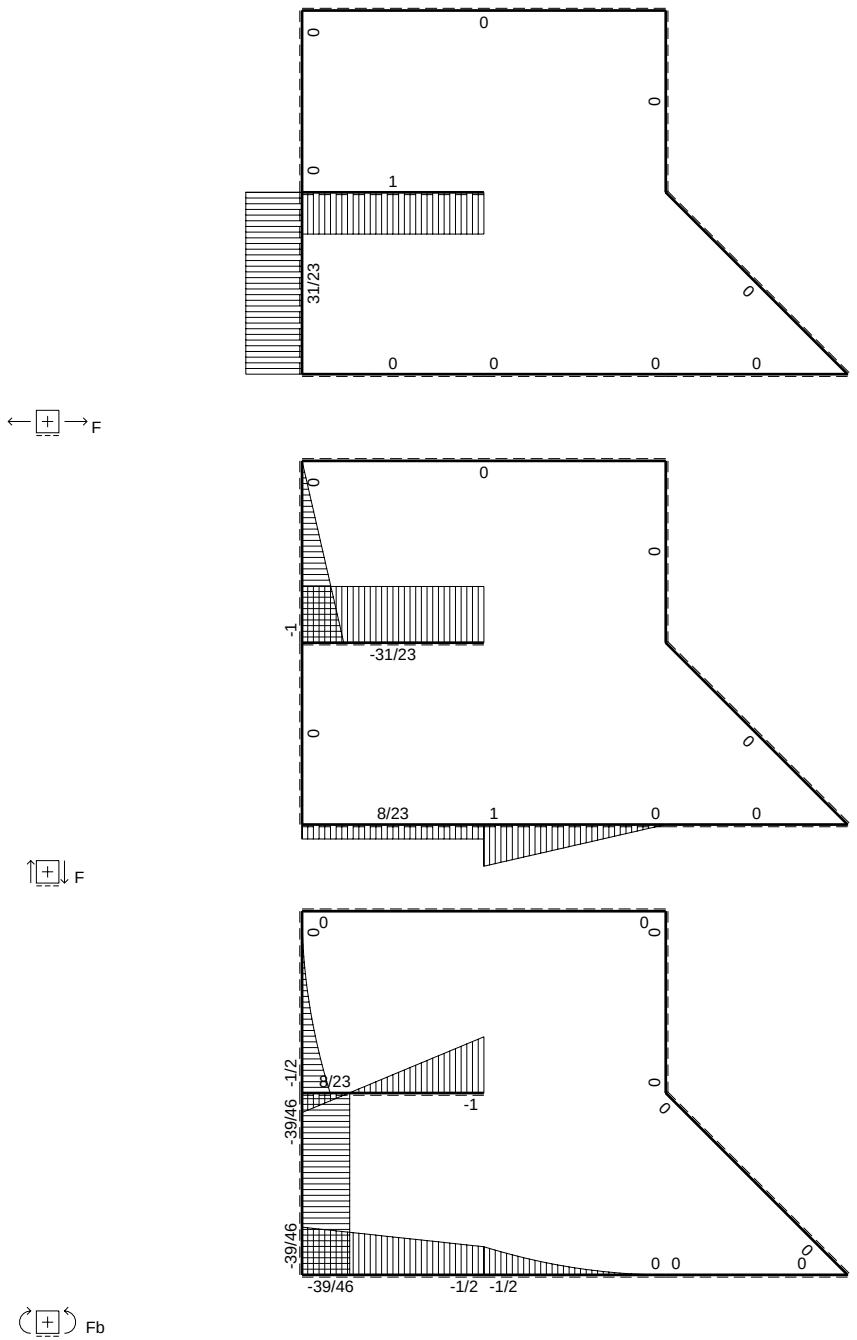
0
0
0
0
1
31/23
0
0
0
0
0
F
0
0
0
0
-1
-31/23
0
0
8/23
1
0
0
F
0
0
0
0
-1/2
8/23
-1
-39/46
0
0
-39/46
0 0
0
-39/46
-1/2 -1/2
Fb

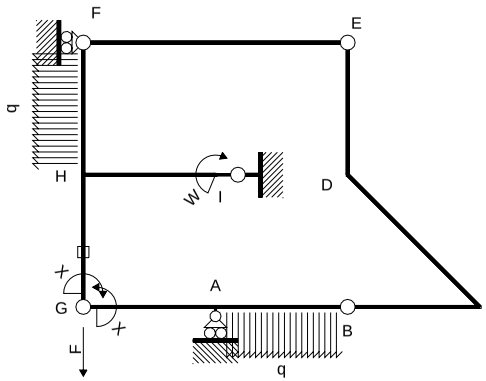

Schema di calcolo iperstatico

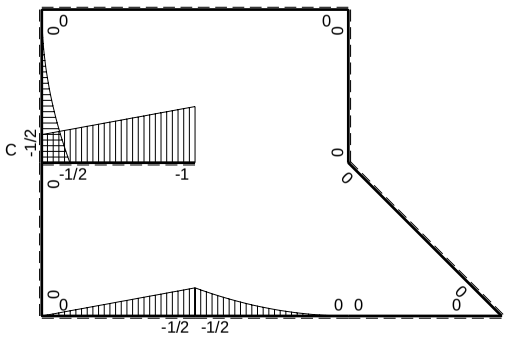

M_0 flessione da carichi assegnati

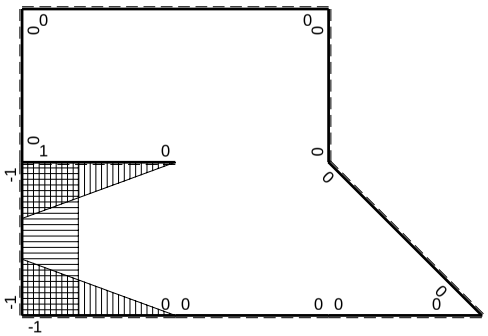

M_x flessione da iperstatica X=1

Quadro contributi PLV per iperstatica $X=W_{GA}$

→	$M_x(x)$	$M_o(x)$	M_xM_o	M_xM_x	$\int M_xM_o/EJdx$	$\int XM_xM_x/EJdx$
AB b	0	$-1/2Fb+Fx-1/2qx^2$	0	0	0	0
BA b	0	$1/2qx^2$	0	0		
BC b	0	0	0	0	0	0
CB b	0	0	0	0		
CD $\sqrt{2}$b	0	0	0	0	0	0
DE b	0	0	0	0	0	0
ED b	0	0	0	0		
EF 2b	0	0	0	0	0	0
FE 2b	0	0	0	0		
GA b	-1+x/b	$-1/2Fx$	$1/2Fx-1/2Fx^2/b$	$1-2x/b+x^2/b^2$	$1/12Fb^2/EJ$	$1/3Xb/EJ$
AG b	x/b	$1/2Fb-1/2Fx$	$1/2Fx-1/2Fx^2/b$	x^2/b^2		
FH b	0	$-1/2qx^2$	0	0	0	0
HF b	0	$1/2Fb-Fx+1/2qx^2$	0	0		
HI b	1-x/b	$-1/2Fb-1/2Fx$	$-1/2Fb+1/2Fx^2/b$	$1-2x/b+x^2/b^2$	$-1/3Fb^2/EJ$	$1/3Xb/EJ$
IH b	-x/b	$Fb-1/2Fx$	$-Fx+1/2Fx^2/b$	x^2/b^2		
HG b	-1	0	0	1	0	Xb/EJ
GH b	1	0	0	1		
HG	elongazione asta $N_{1HG}\varepsilon_{HG}L_{HG}$				$-Fb^2/EJ$	
A	molla nodo $-V_{1A}(V_{0A}+XV_{1A})/k_A$				$-3/8Fb^2/EJ$	$1/4Xb/EJ$
	totali				$-13/8Fb^2/EJ$	$23/12Xb/EJ$
	iperstatica $X=W_{GA}$				39/46Fb	

Sviluppi di calcolo iperstatica

$L^{XX}_{GA} = \int_o^b (1 - 2\,x/b + x^2/b^2)\ 1/EJ\ dx = [\,x - x^2/b + 1/3\,x^3/b^2\,]_o^b\ 1/EJ$

$= (\,b - b + 1/3\,b\,)\ 1/EJ = 1/3\ b/EJ$

$L^{XX}_{AG} = \int_o^b (\,x^2/b^2\,)\ 1/EJ\ dx = [1/3\,x^3/b^2\,]_o^b\ 1/EJ$

$= (1/3\,b\,)\ 1/EJ = 1/3\ b/EJ$

$L^{XX}_{HI} = \int_o^b (1 - 2\,x/b + x^2/b^2)\ 1/EJ\ dx = [\,x - x^2/b + 1/3\,x^3/b^2\,]_o^b\ 1/EJ$

$= (\,b - b + 1/3\,b\,)\ 1/EJ = 1/3\ b/EJ$

$L^{XX}_{IH} = \int_o^b (\,x^2/b^2\,)\ 1/EJ\ dx = [1/3\,x^3/b^2\,]_o^b\ 1/EJ$

$= (1/3\,b\,)\ 1/EJ = 1/3\ b/EJ$

$L^{XX}_{HG} = \int_o^b (1)\ 1/EJ\ dx = [\,x\,]_o^b\ 1/EJ$

$= (\,b\,)\ 1/EJ = b/EJ$

$L^{XX}_{GH} = \int_o^b (1)\ 1/EJ\ dx = [\,x\,]_o^b\ 1/EJ$

$= (\,b\,)\ 1/EJ = b/EJ$

$L^{Xo}_{GA} = \int_o^b (1/2\,x/b - 1/2\,x^2/b^2)\ Fb\ 1/EJ\ dx = [1/4\,x^2/b - 1/6\,x^3/b^2\,]_o^b\ Fb\ 1/EJ$

$= (1/4\,b - 1/6\,b\,)\ Fb\ 1/EJ = 1/12\ Fb^2/EJ$

$L^{Xo}_{AG} = \int_o^b (1/2\,x/b - 1/2\,x^2/b^2\,)\ Fb\ 1/EJ\ dx = [1/4\,x^2/b - 1/6\,x^3/b^2\,]_o^b\ Fb\ 1/EJ$

$= (1/4\,b - 1/6\,b\,)\ Fb\ 1/EJ = 1/12\ Fb^2/EJ$

$L^{Xo}_{HI} = \int_o^b (-1/2 + 1/2\,x^2/b^2\,)\ Fb\ 1/EJ\ dx = [-1/2\,x + 1/6\,x^3/b^2\,]_o^b\ Fb\ 1/EJ$

$= (-1/2\,b + 1/6\,b\,)\ Fb\ 1/EJ = -1/3\ Fb^2/EJ$

$L^{Xo}_{IH} = \int_o^b (-\,x/b + 1/2\,x^2/b^2\,)\ Fb\ 1/EJ\ dx = [-1/2\,x^2/b + 1/6\,x^3/b^2\,]_o^b\ Fb\ 1/EJ$

$= (-1/2\,b + 1/6\,b\,)\ Fb\ 1/EJ = -1/3\ Fb^2/EJ$

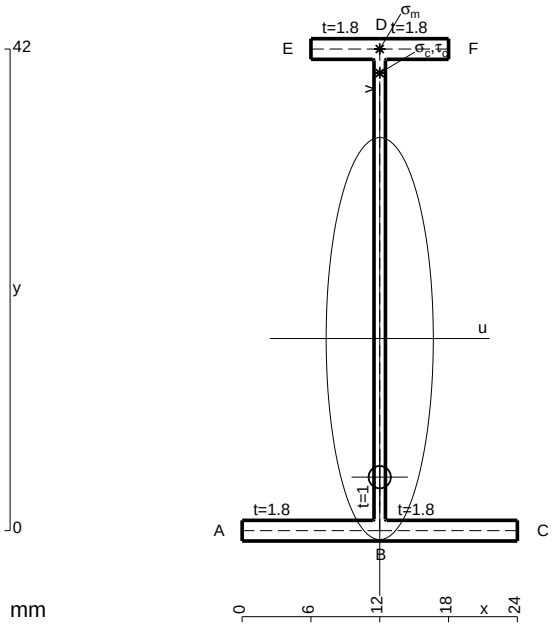

A = 106.8 mm^2
J_u = 32824. mm^4
J_v = 2333. mm^4
J_t = 83.98 mm^4
y_o = -12.09 mm
y_g = 16.75 mm
T_y = 930. N
M_x = -283650. Nmm
x_m = 12. mm
y_m = 42. mm
v_m = 25.25 mm
$\sigma_m = -Mv/J_u$ = 218.2 N/mm^2
y_c = 2. mm
u_c = -12. mm
v_c = -14.75 mm
$\sigma_c = -Mv/J_u$ = 218.2 N/mm^2
$\tau_c = TS^*/tJ_u$ = 15.45 N/mm^2
$\tau_g = TS^*/tJ_u$ = 15.45 N/mm^2
t_c = 930. mm
$\sigma_o = \sqrt{\sigma^2 + 3\tau^2}$ = 219.8 N/mm^2

ESΣ05.xxxx.007

@ Adolfo Zavelani Rossi, Politecnico di Milano, vers.27.03.13 01.12.25

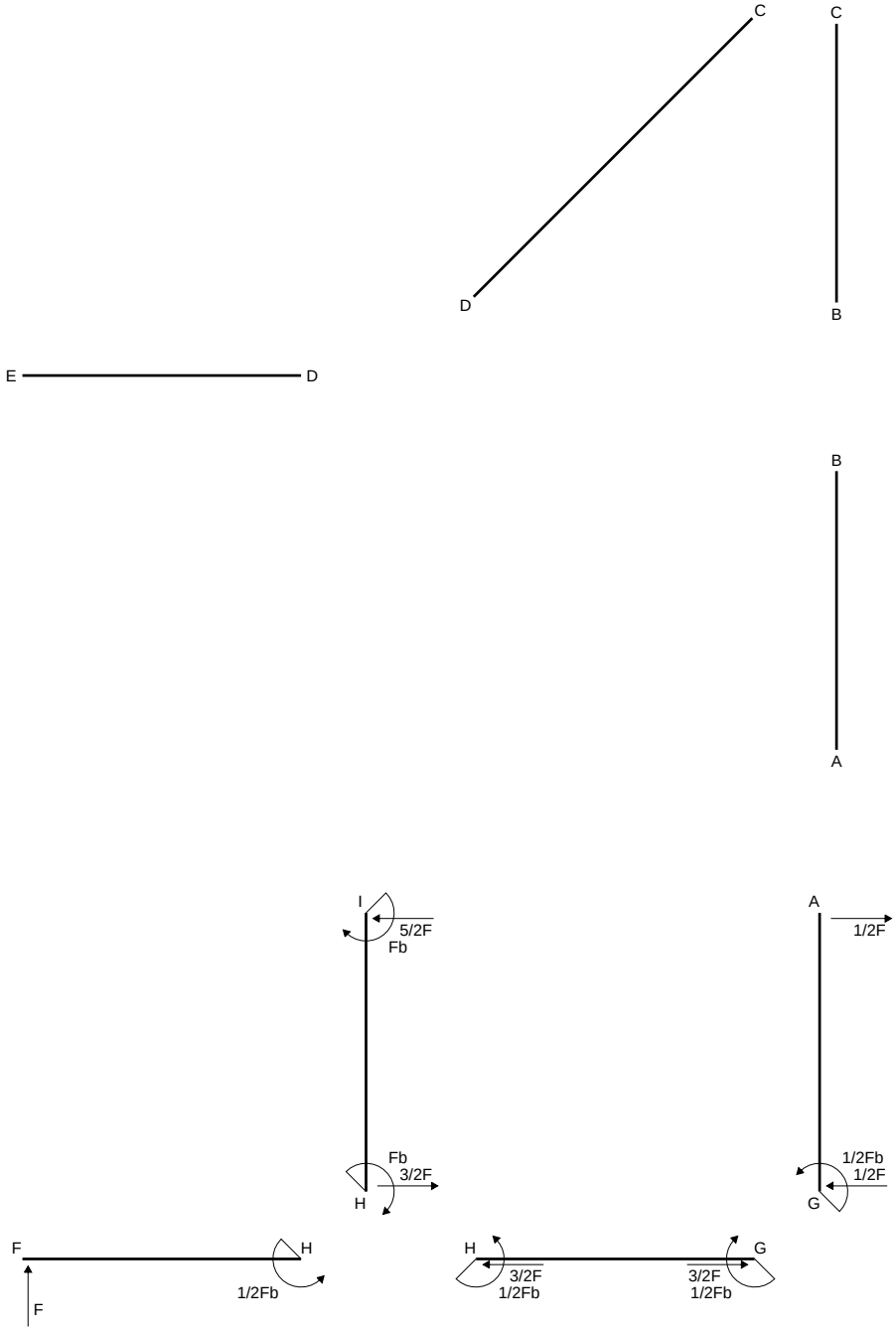
C
C
D
B
E
D
B
E
A
F
I
5/2F
Fb
A
1/2F
Fb
3/2F
H
1/2Fb
1/2F
G
F
H
1/2Fb
F
H
G
3/2F
1/2Fb
3/2F
1/2Fb

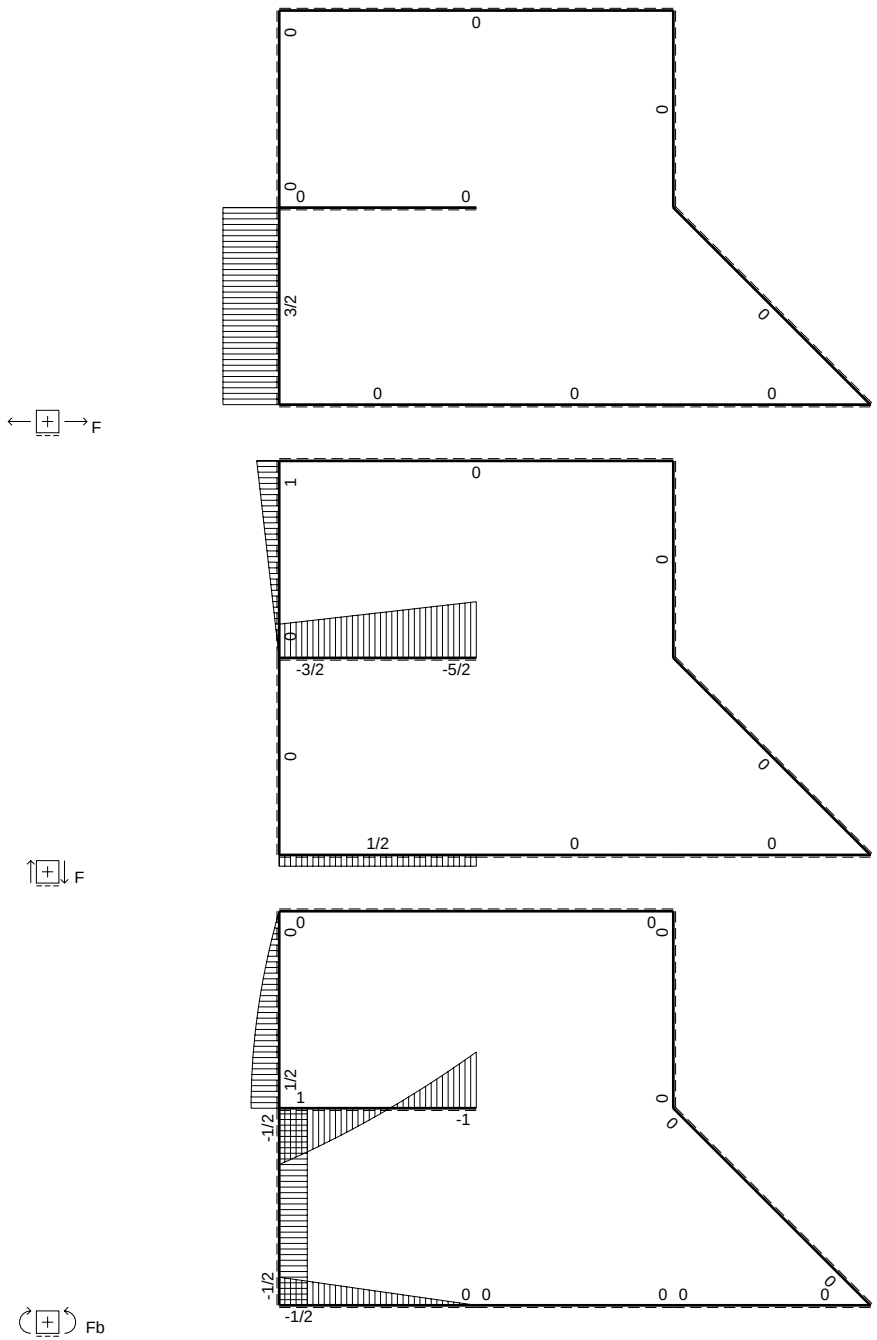
F
F
Fb

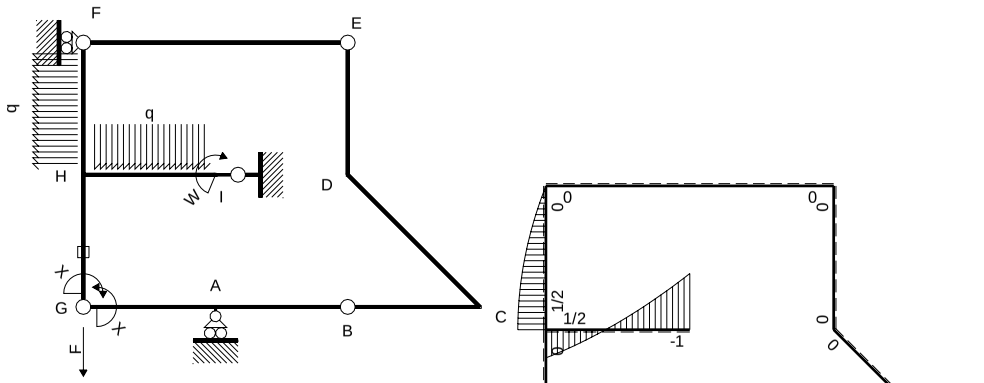

Schema di calcolo iperstatico

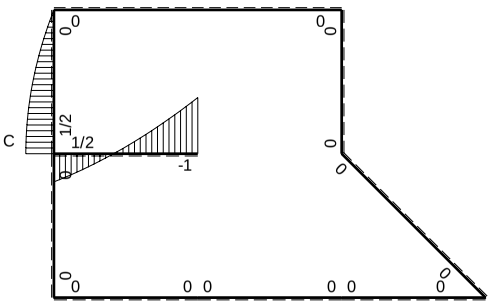

M_0 flessione da carichi assegnati

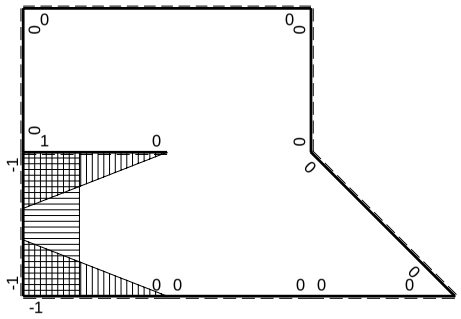

M_x flessione da iperstatica X=1

PROCEDIMENTO E RISULTATI 957348 ESΣ05.xxxx.008

@ Adolfo Zavelani Rossi, Politecnico di Milano, vers.27.03.13 01.12.25

Quadro contributi PLV per iperstatica $X=W_{GA}$

→	$M_x(x)$	$M_o(x)$	M_xM_o	M_xM_x	$\int M_xM_o/EJdx$	$\int XM_xM_x/EJdx$
AB b	0	0	0	0	0	0
BA b	0	0	0	0		
BC b	0	0	0	0	0	0
CB b	0	0	0	0		
CD √2b	0	0	0	0	0	0
DE b	0	0	0	0	0	0
ED b	0	0	0	0		
EF 2b	0	0	0	0	0	0
FE 2b	0	0	0	0		
GA b	-1+x/b	0	0	$1-2x/b+x^2/b^2$	0	1/3Xb/EJ
AG b	x/b	0	0	x^2/b^2		
FH b	0	$Fx-1/2qx^2$	0	0	0	0
HF b	0	$-1/2Fb+1/2qx^2$	0	0		
HI b	1-x/b	$1/2Fb-Fx-1/2qx^2$	$1/2Fb-3/2Fx+1/2Fx^2/b+1/2qx^3/b$	$1-2x/b+x^2/b^2$	$1/24Fb^2/EJ$	1/3Xb/EJ
IH b	-x/b	$Fb-2Fx+1/2qx^2$	$-Fx+2Fx^2/b-1/2qx^3/b$	x^2/b^2		
HG b	-1	0	0	1	0	Xb/EJ
GH b	1	0	0	1		
HG	elongazione asta $N_{1HG}\varepsilon_{HG}L_{HG}$				$-Fb^2/EJ$	
A	molla nodo $-V_{1A}(V_{oA}+XV_{1A})/k_A$					1/4Xb/EJ
	totali				$-23/24Fb^2/EJ$	23/12Xb/EJ
	iperstatica $X=W_{GA}$				1/2Fb	

PROCEDIMENTO E RISULTATI 957348 ESΣ05.xxxx.008

Sviluppi di calcolo iperstatica

@ Adolfo Zavelani Rossi, Politecnico di Milano, vers.27.03.13 01.12.25

$L^{XX}_{GA} = \int_o^b (1 - 2\,x/b + x^2/b^2)\ 1/EJ\ dx = [\ x - x^2/b + 1/3\ x^3/b^2\ ]_o^b\ 1/EJ$

$= (\ b - b + 1/3\ b\ )\ 1/EJ\ = 1/3\ b/EJ$

$L^{XX}_{AG} = \int_o^b (\ x^2/b^2\ )\ 1/EJ\ dx = [1/3\ x^3/b^2\ ]_o^b\ 1/EJ$

$= (1/3\ b\ )\ 1/EJ\ = 1/3\ b/EJ$

$L^{XX}_{HI} = \int_o^b (1 - 2\,x/b + x^2/b^2)\ 1/EJ\ dx = [\ x - x^2/b + 1/3\ x^3/b^2\ ]_o^b\ 1/EJ$

$= (\ b - b + 1/3\ b\ )\ 1/EJ\ = 1/3\ b/EJ$

$L^{XX}_{IH} = \int_o^b (\ x^2/b^2\ )\ 1/EJ\ dx = [1/3\ x^3/b^2\ ]_o^b\ 1/EJ$

$= (1/3\ b\ )\ 1/EJ\ = 1/3\ b/EJ$

$L^{XX}_{HG} = \int_o^b (1\ )\ 1/EJ\ dx = [\ x\ ]_o^b\ 1/EJ$

$= (\ b\ )\ 1/EJ\ =\ b/EJ$

$L^{XX}_{GH} = \int_o^b (1\ )\ 1/EJ\ dx = [\ x\ ]_o^b\ 1/EJ$

$= (\ b\ )\ 1/EJ\ =\ b/EJ$

$L^{Xo}_{HI} = \int_o^b (1/2 - 3/2\ x/b + 1/2\ x^2/b^2 + 1/2\ x^3/b^3\ )\ Fb\ 1/EJ\ dx$

$= [1/2\ x - 3/4\ x^2/b + 1/6\ x^3/b^2 + 1/8\ x^4/b^3\ ]_o^b\ Fb\ 1/EJ$

$= (1/2\ b - 3/4\ b + 1/6\ b + 1/8\ b\ )\ Fb\ 1/EJ\ = 1/24\ Fb^2/EJ$

$L^{Xo}_{IH} = \int_o^b (-\ x/b + 2\ x^2/b^2 - 1/2\ x^3/b^3\ )\ Fb\ 1/EJ\ dx = [-1/2\ x^2/b + 2/3\ x^3/b^2 - 1/8\ x^4/b^3\ ]_o^b\ Fb\ 1/EJ$

$= (-1/2\ b + 2/3\ b - 1/8\ b\ )\ Fb\ 1/EJ\ = 1/24\ Fb^2/EJ$

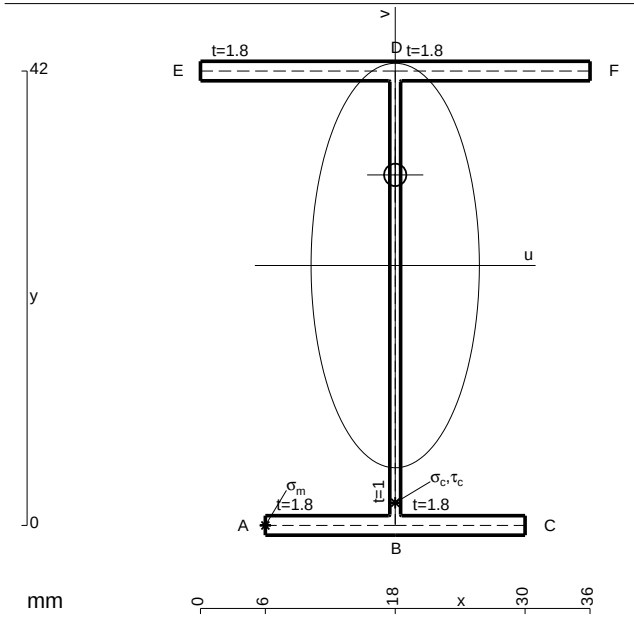

A = 150. mm^2
J_u = 52430. mm^4
J_v = 9072. mm^4
J_t = 130.6 mm^4
y_o = 8.376 mm
y_g = 24.02 mm
T_y = 1045. N
M_x = 501600. Nmm
x_m = 6. mm
u_m = -12. mm
v_m = -24.02 mm
$\sigma_m = -Mv/J_u$ = 229.8 N/mm^2
x_c = 18. mm
v_c = -24.02 mm
$\sigma_c = -Mv/J_u$ = 229.8 N/mm^2
$\tau_c = TS^*/tJ_u$ = 20.69 N/mm^2
$\tau_g = TS^*/tJ_u$ = 20.69 N/mm^2
t_c = 2090. mm
$\sigma_o = \sqrt{\sigma^2 + 3\tau^2}$ = 232.6 N/mm^2

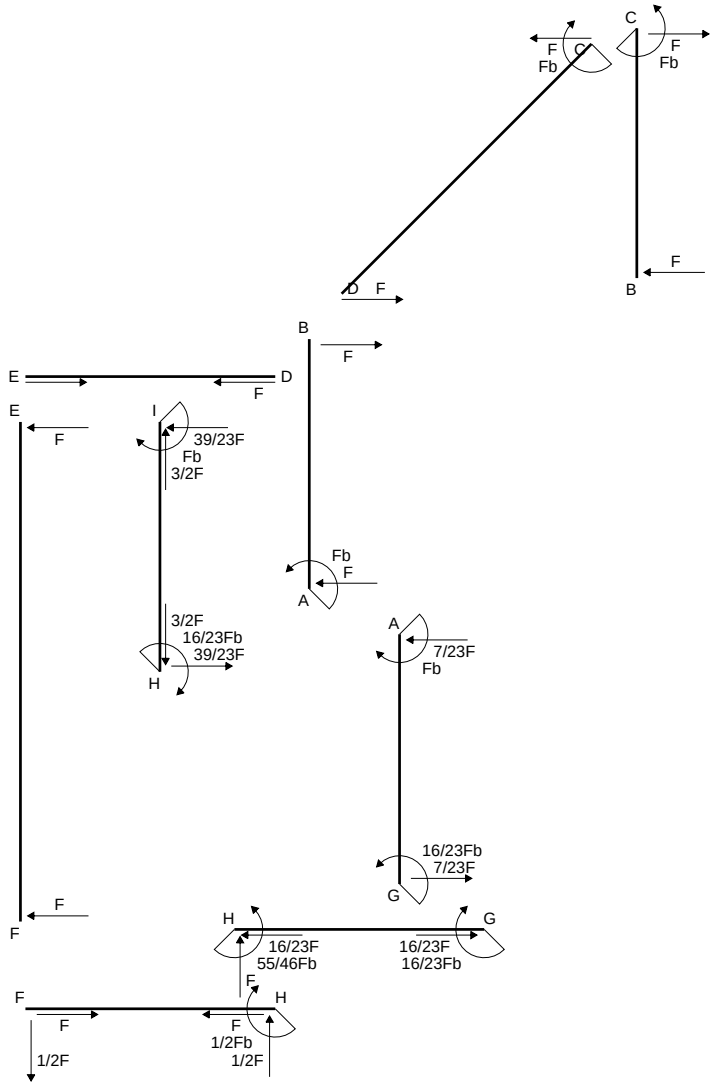
C
F
Fb
C
F
Fb
F
D
F
B
B
F
E
D
F
E
F
I
39/23F
Fb
3/2F
Fb
F
A
3/2F
16/23Fb
39/23F
H
A
7/23F
Fb
16/23Fb
7/23F
G
F
F
H
G
16/23F
55/46Fb
16/23F
16/23Fb
F
F
H
F
F
1/2Fb
1/2F
F
1/2F

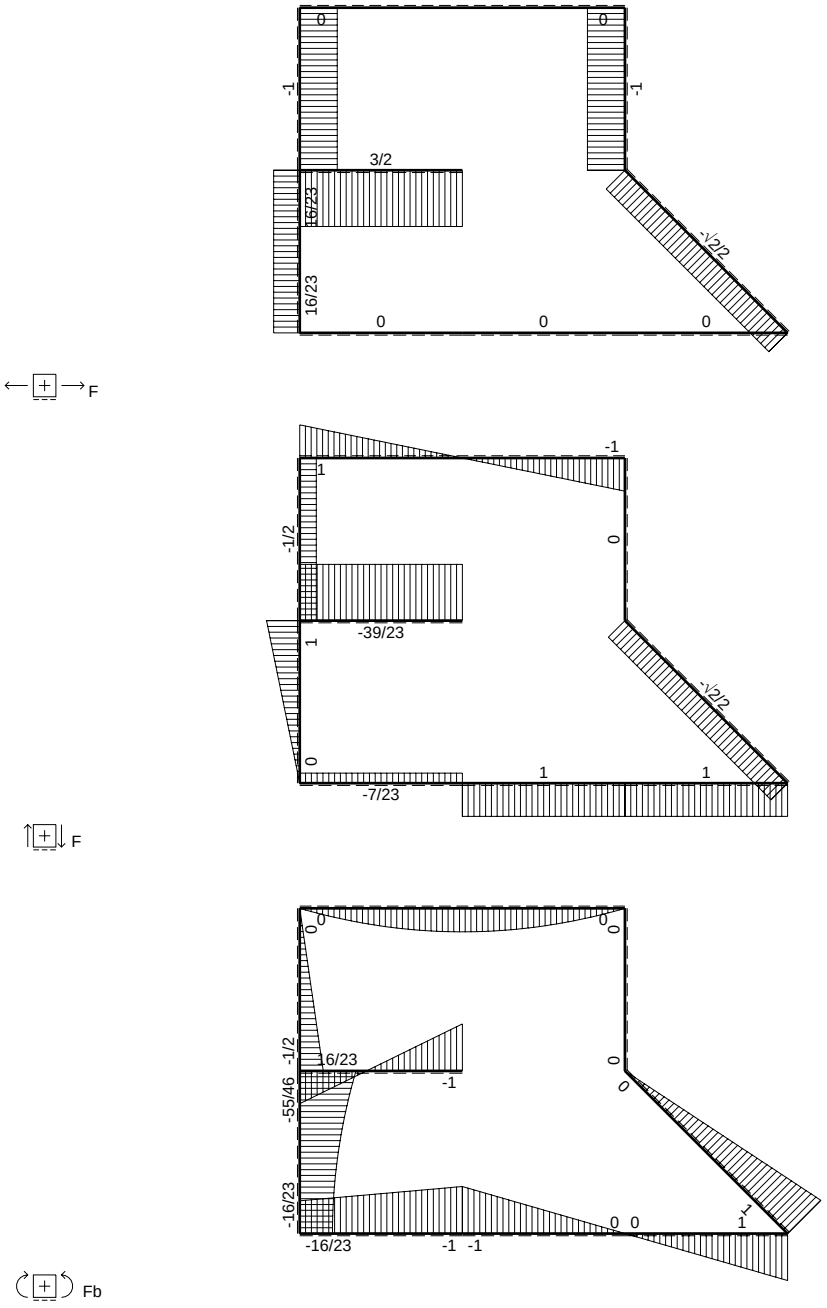
F
0
0
-1
-1
3/2
16/23
-√2/2
16/23
0
0
0
F
-1
1
-1/2
0
-39/23
1
-√2/2
0
1
1
-7/23
F
0
0
0
0
-1/2
16/23
-1
0
0
-55/46
-16/23
0 0
1
1
-16/23
-1 -1
Fb

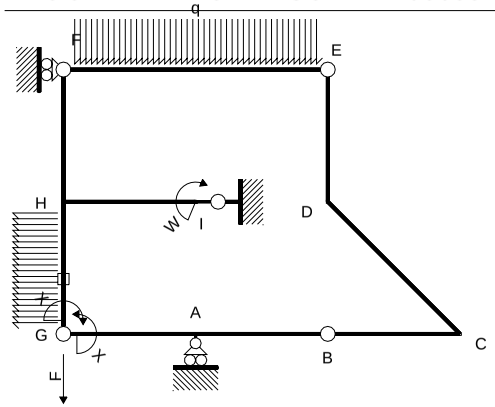

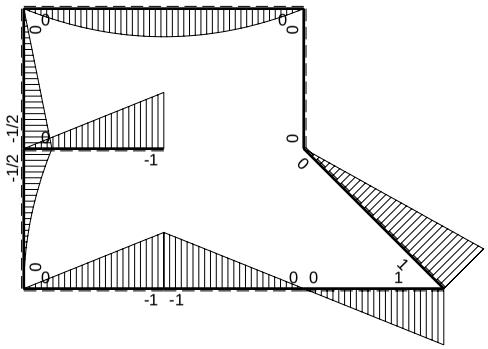

M_0 flessione da carichi assegnati

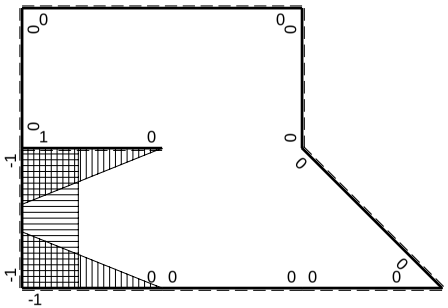

M_x flessione da iperstatica X=1

Quadro contributi PLV per iperstatica $X=W_{GA}$

→	$M_x(x)$	$M_o(x)$	M_xM_o	M_xM_x	$\int M_xM_o/EJdx$	$\int XM_xM_x/EJdx$
AB b	0	-Fb+Fx	0	0	0	0
BA b	0	Fx	0	0		
BC b	0	Fx	0	0	0	0
CB b	0	-Fb+Fx	0	0		
CD √2b	0	Fb-√2/2Fx	0	0	0	0
DE b	0	0	0	0	0	0
ED b	0	0	0	0		
EF 2b	0	$-Fx+1/2qx^2$	0	0	0	0
FE 2b	0	$Fx-1/2qx^2$	0	0		
GA b	-1+x/b	-Fx	$Fx-Fx^2/b$	$1-2x/b+x^2/b^2$	$1/6Fb^2/EJ$	1/3Xb/EJ
AG b	x/b	Fb-Fx	$Fx-Fx^2/b$	x^2/b^2		
FH b	0	-1/2Fx	0	0	0	0
HF b	0	1/2Fb-1/2Fx	0	0		
HI b	1-x/b	-Fx	$-Fx+Fx^2/b$	$1-2x/b+x^2/b^2$	$-1/6Fb^2/EJ$	1/3Xb/EJ
IH b	-x/b	Fb-Fx	$-Fx+Fx^2/b$	x^2/b^2		
HG b	-1	$-1/2Fb+Fx-1/2qx^2$	$1/2Fb-Fx+1/2Fx^2/b$	1	$1/6Fb^2/EJ$	Xb/EJ
GH b	1	$1/2qx^2$	$1/2Fx^2/b$	1		
HG	elongazione asta $N_{1HG}\varepsilon_{HG}L_{HG}$				$-Fb^2/EJ$	
A	molla nodo $-V_{1A}(V_{0A}+XV_{1A})/k_A$				$-1/2Fb^2/EJ$	1/4Xb/EJ
	totali				$-4/3Fb^2/EJ$	23/12Xb/EJ
	iperstatica $X=W_{GA}$				16/23Fb	

Sviluppi di calcolo iperstatica

$L^{XX}_{GA} = \int_o^b (1 - 2\,x/b + x^2/b^2)\ 1/EJ\ dx = [\ x - x^2/b + 1/3\ x^3/b^2\ ]_o^b\ 1/EJ$

$= (\ b - b + 1/3\ b\ )\ 1/EJ\ = 1/3\ b/EJ$

$L^{XX}_{AG} = \int_o^b (\ x^2/b^2\ )\ 1/EJ\ dx = [1/3\ x^3/b^2\ ]_o^b\ 1/EJ$

$= (1/3\ b\ )\ 1/EJ\ = 1/3\ b/EJ$

$L^{XX}_{HI} = \int_o^b (1 - 2\,x/b + x^2/b^2)\ 1/EJ\ dx = [\ x - x^2/b + 1/3\ x^3/b^2\ ]_o^b\ 1/EJ$

$= (\ b - b + 1/3\ b\ )\ 1/EJ\ = 1/3\ b/EJ$

$L^{XX}_{IH} = \int_o^b (\ x^2/b^2\ )\ 1/EJ\ dx = [1/3\ x^3/b^2\ ]_o^b\ 1/EJ$

$= (1/3\ b\ )\ 1/EJ\ = 1/3\ b/EJ$

$L^{XX}_{HG} = \int_o^b (1\ )\ 1/EJ\ dx = [\ x\ ]_o^b\ 1/EJ$

$= (\ b\ )\ 1/EJ\ =\ b/EJ$

$L^{XX}_{GH} = \int_o^b (1\ )\ 1/EJ\ dx = [\ x\ ]_o^b\ 1/EJ$

$= (\ b\ )\ 1/EJ\ =\ b/EJ$

$L^{Xo}_{GA} = \int_o^b (\ x/b - x^2/b^2\ )\ Fb\ 1/EJ\ dx = [1/2\ x^2/b - 1/3\ x^3/b^2\ ]_o^b\ Fb\ 1/EJ$

$= (1/2\ b - 1/3\ b\ )\ Fb\ 1/EJ\ = 1/6\ Fb^2/EJ$

$L^{Xo}_{AG} = \int_o^b (\ x/b - x^2/b^2\ )\ Fb\ 1/EJ\ dx = [1/2\ x^2/b - 1/3\ x^3/b^2\ ]_o^b\ Fb\ 1/EJ$

$= (1/2\ b - 1/3\ b\ )\ Fb\ 1/EJ\ = 1/6\ Fb^2/EJ$

$L^{Xo}_{HI} = \int_o^b (-\ x/b + x^2/b^2\ )\ Fb\ 1/EJ\ dx = [-1/2\ x^2/b + 1/3\ x^3/b^2\ ]_o^b\ Fb\ 1/EJ$

$= (-1/2\ b + 1/3\ b\ )\ Fb\ 1/EJ\ = -1/6\ Fb^2/EJ$

$L^{Xo}_{IH} = \int_o^b (-\ x/b + x^2/b^2\ )\ Fb\ 1/EJ\ dx = [-1/2\ x^2/b + 1/3\ x^3/b^2\ ]_o^b\ Fb\ 1/EJ$

$= (-1/2\ b + 1/3\ b\ )\ Fb\ 1/EJ\ = -1/6\ Fb^2/EJ$

$L^{Xo}_{HG} = \int_o^b (1/2 - x/b + 1/2\ x^2/b^2\ )\ Fb\ 1/EJ\ dx - 1\ \ (-1)\ \ (-1)\ \ Fb^2/EJ$

$= [1/2\ x - 1/2\ x^2/b + 1/6\ x^3/b^2\ ]_o^b\ Fb\ 1/EJ\ -\ 1\ \ (-1)\ \ (-1)\ \ Fb^2/EJ$

$= (1/2\ b - 1/2\ b + 1/6\ b\ )\ Fb\ 1/EJ\ -\ 1\ \ (-1)\ \ (-1)\ \ Fb^2/EJ = -5/6\ \ Fb^2/EJ$

$L^{Xo}_{GH} = \int_o^b (1/2\ x^2/b^2\ )\ Fb\ 1/EJ\ dx - 1\ \ (-1)\ \ (-1)\ \ Fb^2/EJ = [1/6\ x^3/b^2\ ]_o^b\ Fb\ 1/EJ\ -\ 1\ \ (-1)\ \ (-1)\ \ Fb^2/EJ$

$= (1/6\ b\ )\ Fb\ 1/EJ\ -\ 1\ \ (-1)\ \ (-1)\ \ Fb^2/EJ = -5/6\ \ Fb^2/EJ$

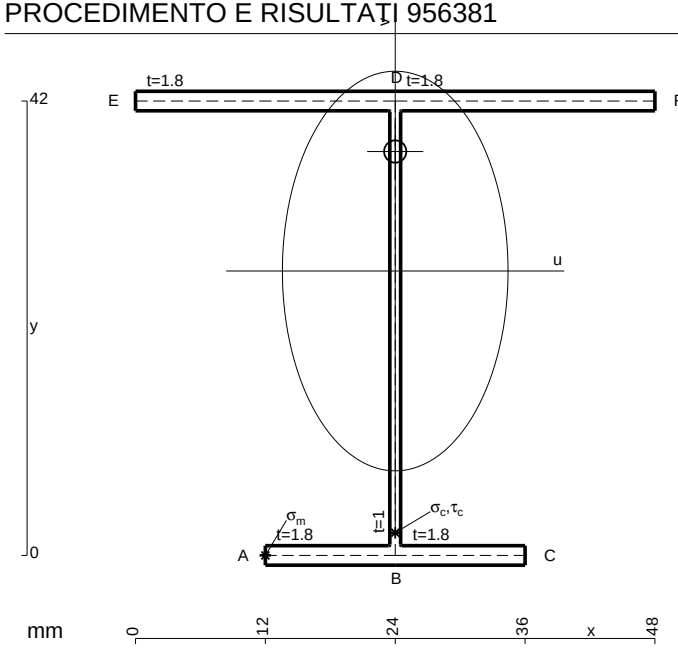

A = 171.6 mm^2
J_u = 58532. mm^4
J_v = 18662. mm^4
J_t = 154. mm^4
y_o = 11.05 mm
y_g = 26.29 mm
T_y = 780. N
M_x = -530400. Nmm
x_m = 12. mm
u_m = -12. mm
v_m = -26.29 mm
$\sigma_m = -Mv/J_u$ = -238.2 N/mm^2
x_c = 24. mm
v_c = -26.29 mm
$\sigma_c = -Mv/J_u$ = -238.2 N/mm^2
$\tau_c = TS^*/tJ_u$ = 15.13 N/mm^2
$\tau_g = TS^*/tJ_u$ = 15.13 N/mm^2
t_c = 780. mm
$\sigma_o = \sqrt{\sigma^2 + 3\tau^2}$ = 239.6 N/mm^2

ESΣ05.xxxx.009

@ Adolfo Zavelani Rossi, Politecnico di Milano, vers.27.03.13 01.12.25

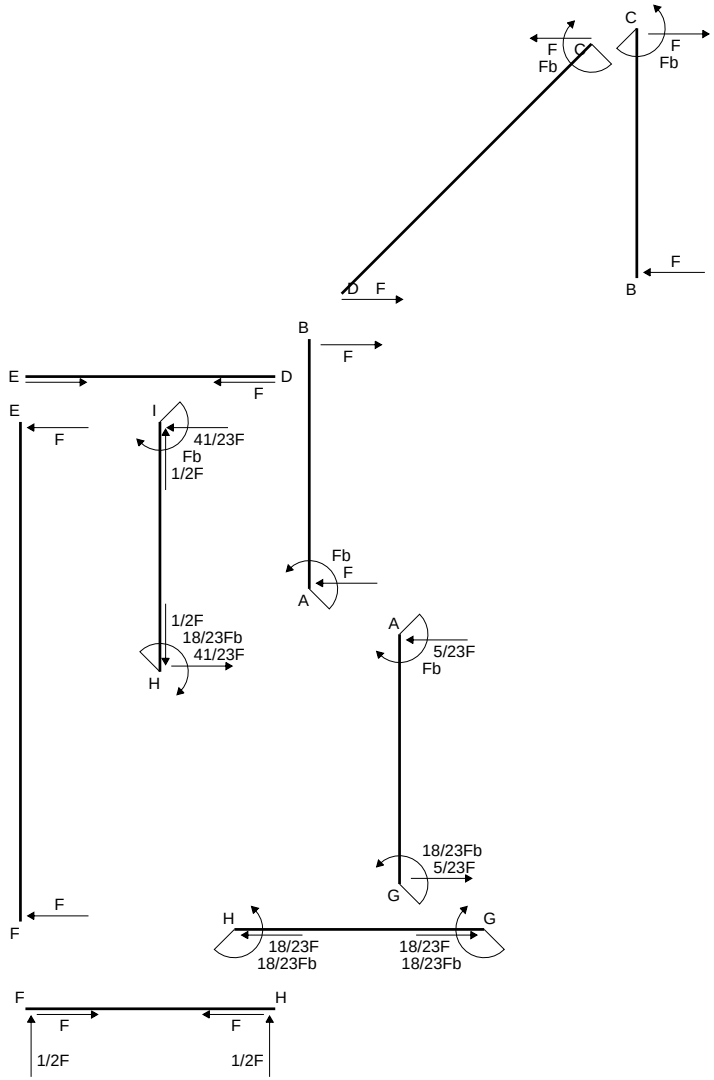
C
F
Fb
C
F
Fb
D
F
B
F
B
F
E
D
F
E
F
I
41/23F
Fb
1/2F
Fb
F
A
1/2F
18/23Fb
41/23F
H
A
5/23F
Fb
18/23Fb
5/23F
G
F
F
H
G
18/23F
18/23Fb
18/23F
18/23Fb
F
H
F
F
1/2F
1/2F

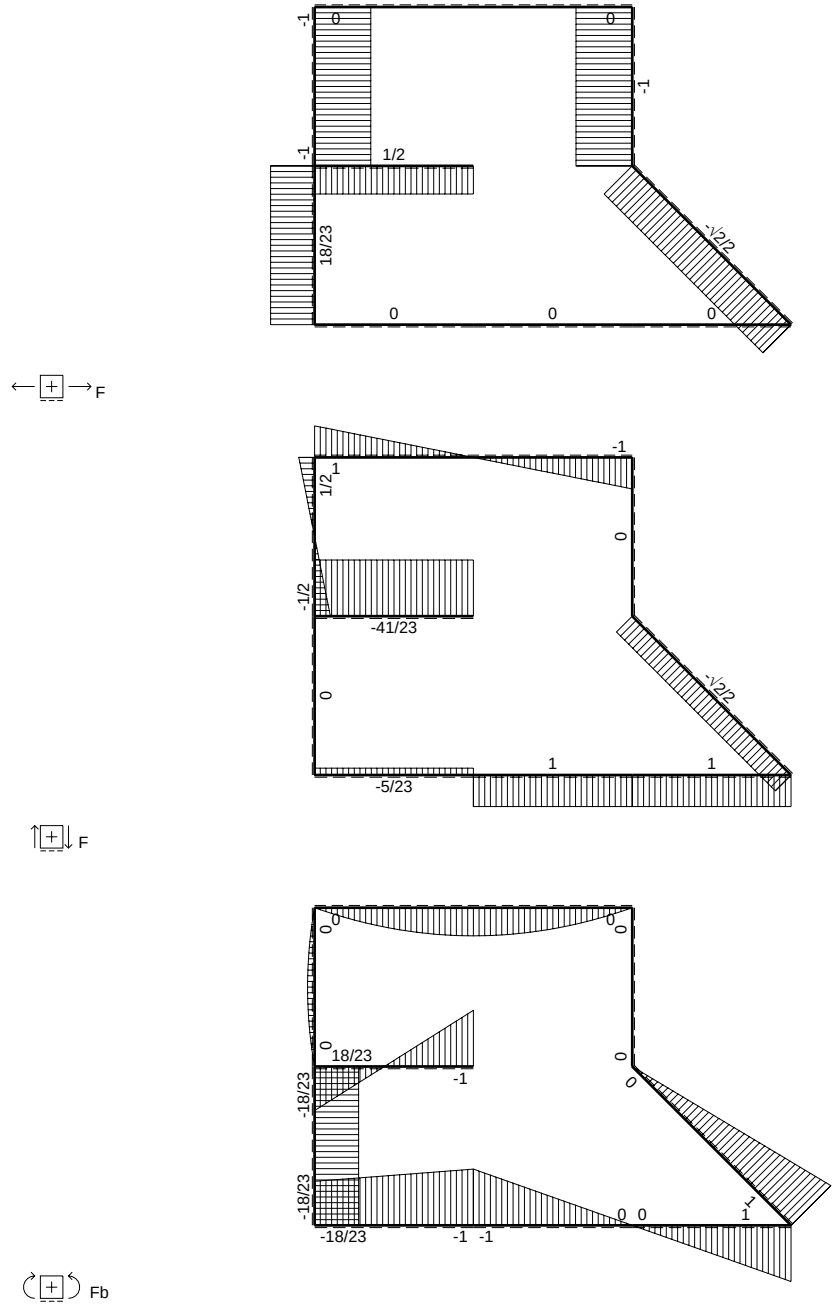
-1
0
0
-1
-1
1/2
18/23
-√2/2
0
0
0
F
-1
1
1/2
0
-1/2
-41/23
0
-√2/2
1
1
-5/23
F
0
0
0
0
0
18/23
-1
0
0
-18/23
-18/23
-18/23
-1
-1
0
0
1
1
Fb

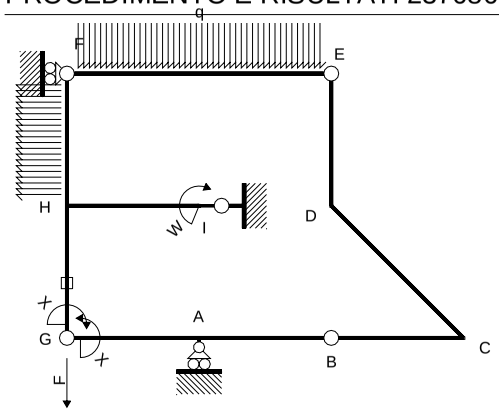

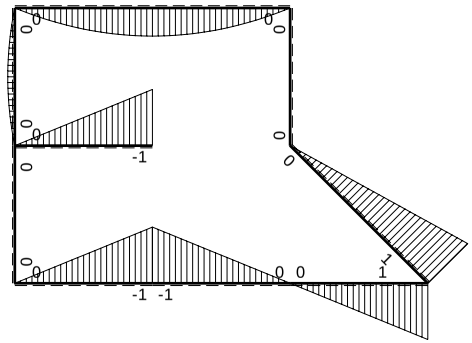

M_0 flessione da carichi assegnati

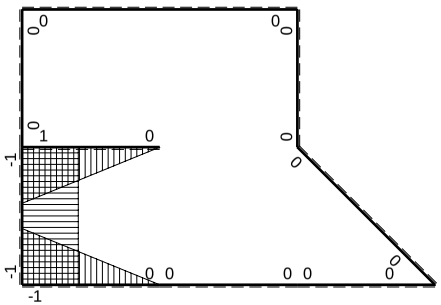

M_x flessione da iperstatica X=1

Quadro contributi PLV per iperstatica $X=W_{GA}$

→	$M_x(x)$	$M_0(x)$	M_xM_0	M_xM_x	$\int M_xM_0/EJdx$	$\int XM_xM_x/EJdx$
AB b	0	-Fb+Fx	0	0	0	0
BA b	0	Fx	0	0		
BC b	0	Fx	0	0	0	0
CB b	0	-Fb+Fx	0	0		
CD √2b	0	Fb-√2/2Fx	0	0	0	0
DE b	0	0	0	0	0	0
ED b	0	0	0	0		
EF 2b	0	$-Fx+1/2qx^2$	0	0	0	0
FE 2b	0	$Fx-1/2qx^2$	0	0		
GA b	-1+x/b	-Fx	$Fx-Fx^2/b$	$1-2x/b+x^2/b^2$	$1/6Fb^2/EJ$	1/3Xb/EJ
AG b	x/b	Fb-Fx	$Fx-Fx^2/b$	x^2/b^2		
FH b	0	$1/2Fx-1/2qx^2$	0	0	0	0
HF b	0	$-1/2Fx+1/2qx^2$	0	0		
HI b	1-x/b	-Fx	$-Fx+Fx^2/b$	$1-2x/b+x^2/b^2$	$-1/6Fb^2/EJ$	1/3Xb/EJ
IH b	-x/b	Fb-Fx	$-Fx+Fx^2/b$	x^2/b^2		
HG b	-1	0	0	1	0	Xb/EJ
GH b	1	0	0	1		
HG	elongazione asta $N_{1HG}\varepsilon_{HG}L_{HG}$				$-Fb^2/EJ$	
A	molla nodo $-V_{1A}(V_{0A}+XV_{1A})/k_A$				$-1/2Fb^2/EJ$	1/4Xb/EJ
	totali				$-3/2Fb^2/EJ$	23/12Xb/EJ
	iperstatica $X=W_{GA}$				18/23Fb	

Sviluppi di calcolo iperstatica

$L^{XX}_{GA} = \int_o^b (1 - 2\,x/b + x^2/b^2)\ 1/EJ\ dx = [\,x - x^2/b + 1/3\,x^3/b^2\,]_o^b\ 1/EJ$

$= (\,b - b + 1/3\,b\,)\ 1/EJ\ = 1/3\ b/EJ$

$L^{XX}_{AG} = \int_o^b (\,x^2/b^2\,)\ 1/EJ\ dx = [1/3\,x^3/b^2\,]_o^b\ 1/EJ$

$= (1/3\,b\,)\ 1/EJ\ = 1/3\ b/EJ$

$L^{XX}_{HI} = \int_o^b (1 - 2\,x/b + x^2/b^2)\ 1/EJ\ dx = [\,x - x^2/b + 1/3\,x^3/b^2\,]_o^b\ 1/EJ$

$= (\,b - b + 1/3\,b\,)\ 1/EJ\ = 1/3\ b/EJ$

$L^{XX}_{IH} = \int_o^b (\,x^2/b^2\,)\ 1/EJ\ dx = [1/3\,x^3/b^2\,]_o^b\ 1/EJ$

$= (1/3\,b\,)\ 1/EJ\ = 1/3\ b/EJ$

$L^{XX}_{HG} = \int_o^b (1)\ 1/EJ\ dx = [\,x\,]_o^b\ 1/EJ$

$= (\,b\,)\ 1/EJ\ = b/EJ$

$L^{XX}_{GH} = \int_o^b (1)\ 1/EJ\ dx = [\,x\,]_o^b\ 1/EJ$

$= (\,b\,)\ 1/EJ\ = b/EJ$

$L^{Xo}_{GA} = \int_o^b (\,x/b - x^2/b^2\,)\ Fb\ 1/EJ\ dx = [1/2\,x^2/b - 1/3\,x^3/b^2\,]_o^b\ Fb\ 1/EJ$

$= (1/2\,b - 1/3\,b\,)\ Fb\ 1/EJ\ = 1/6\ Fb^2/EJ$

$L^{Xo}_{AG} = \int_o^b (\,x/b - x^2/b^2\,)\ Fb\ 1/EJ\ dx = [1/2\,x^2/b - 1/3\,x^3/b^2\,]_o^b\ Fb\ 1/EJ$

$= (1/2\,b - 1/3\,b\,)\ Fb\ 1/EJ\ = 1/6\ Fb^2/EJ$

$L^{Xo}_{HI} = \int_o^b (-\,x/b + x^2/b^2\,)\ Fb\ 1/EJ\ dx = [-1/2\,x^2/b + 1/3\,x^3/b^2\,]_o^b\ Fb\ 1/EJ$

$= (-1/2\,b + 1/3\,b\,)\ Fb\ 1/EJ\ = -1/6\ Fb^2/EJ$

$L^{Xo}_{IH} = \int_o^b (-\,x/b + x^2/b^2\,)\ Fb\ 1/EJ\ dx = [-1/2\,x^2/b + 1/3\,x^3/b^2\,]_o^b\ Fb\ 1/EJ$

$= (-1/2\,b + 1/3\,b\,)\ Fb\ 1/EJ\ = -1/6\ Fb^2/EJ$

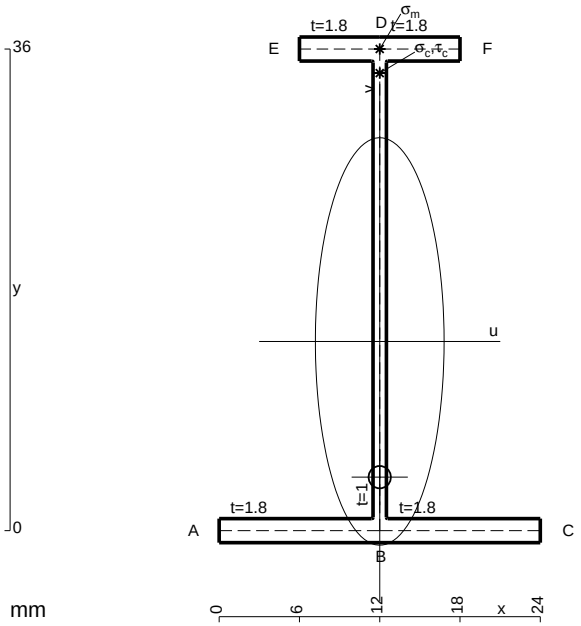

A = 100.8 mm^2
J_u = 23384. mm^4
J_v = 2333. mm^4
J_t = 81.98 mm^4
y_o = -10.14 mm
y_g = 14.14 mm
T_y = 690. N
M_x = -213900. Nmm
x_m = 12. mm
y_m = 36. mm
v_m = 21.86 mm
$\sigma_m = -Mv/J_u$ = 199.9 N/mm^2
y_c = 2. mm
u_c = -12. mm
v_c = -12.14 mm
$\sigma_c = -Mv/J_u$ = 199.9 N/mm^2
$\tau_c = TS^*/tJ_u$ = 13.93 N/mm^2
$\tau_g = TS^*/tJ_u$ = 13.93 N/mm^2
t_c = 690. mm
$\sigma_o = \sqrt{\sigma^2 + 3\tau^2}$ = 201.4 N/mm^2

ESΣ05.xxxx.010

@ Adolfo Zavelani Rossi, Politecnico di Milano, vers.27.03.13 01.12.25

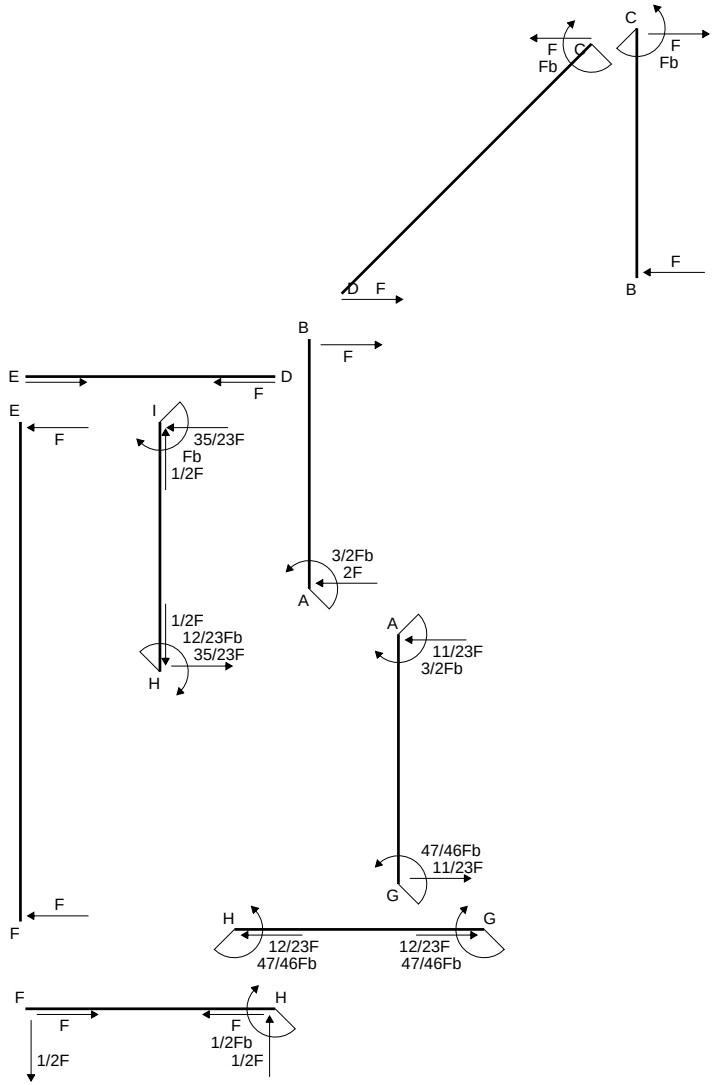
C
F
Fb
C
F
Fb
F
D
F
B
B
F
E
D
F
E
F
I
35/23F
Fb
1/2F
3/2Fb
2F
A
1/2F
12/23Fb
35/23F
H
A
11/23F
3/2Fb
47/46Fb
11/23F
G
F
F
H
G
12/23F
47/46Fb
12/23F
47/46Fb
F
F
H
F
1/2Fb
1/2F
1/2F

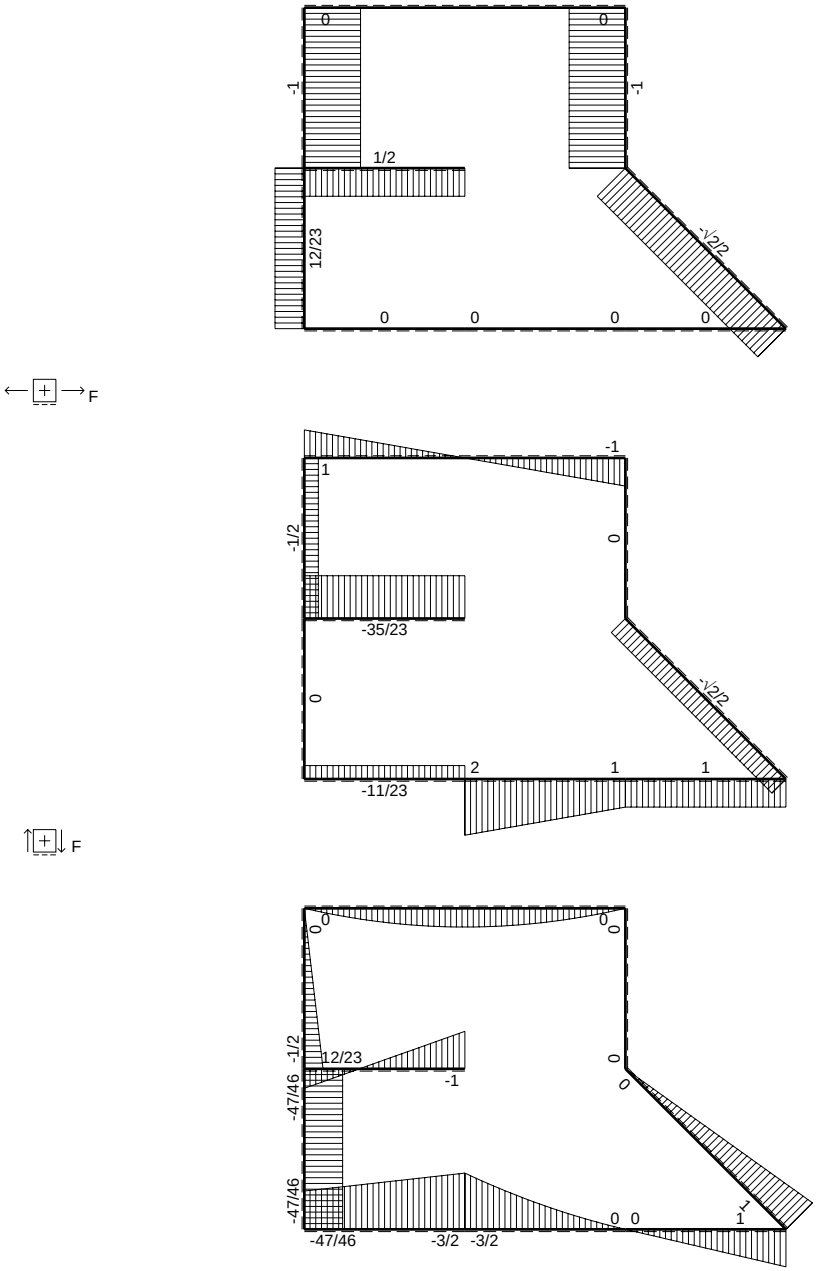
0
0
-1
-1
1/2
12/23
-1/2
0
0
0
0
F
-1
1
-1/2
0
-35/23
0
-1/2
2
1
1
-11/23
F
0
0
0
0
-1/2
12/23
-1
-47/46
0
0
-47/46
0 0
-1
1
-47/46
-3/2
-3/2
Fb

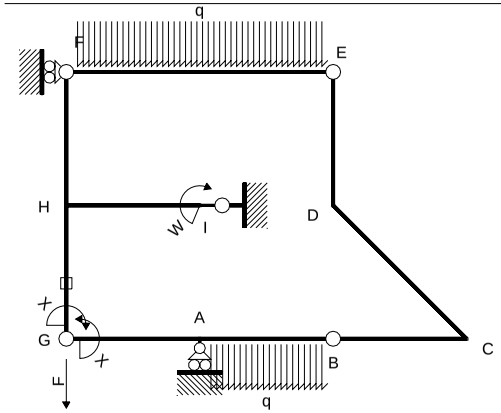

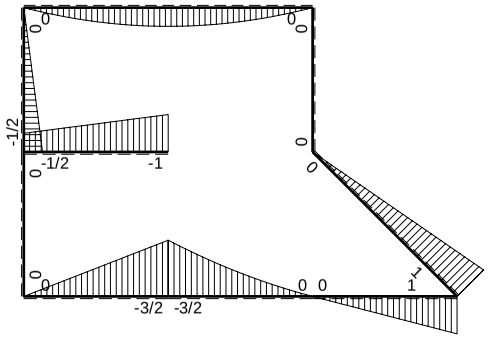

M_0 flessione da carichi assegnati

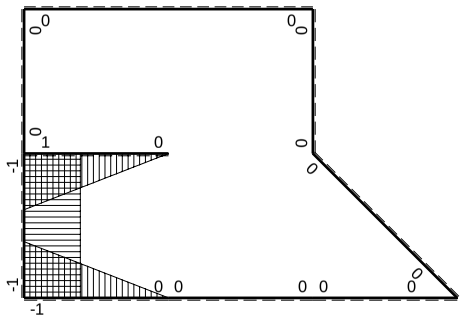

M_x flessione da iperstatica X=1

Quadro contributi PLV per iperstatica $X=W_{GA}$

→	$M_x(x)$	$M_o(x)$	M_xM_o	M_xM_x	$\int M_xM_o/EJdx$	$\int XM_xM_x/EJdx$
AB b	0	$-3/2Fb+2Fx-1/2qx^2$	0	0	0	0
BA b	0	$Fx+1/2qx^2$	0	0		
BC b	0	Fx	0	0	0	0
CB b	0	$-Fb+Fx$	0	0		
CD $\sqrt{2}b$	0	$Fb-\sqrt{2}/2Fx$	0	0	0	0
DE b	0	0	0	0	0	0
ED b	0	0	0	0		
EF 2b	0	$-Fx+1/2qx^2$	0	0	0	0
FE 2b	0	$Fx-1/2qx^2$	0	0		
GA b	-1+x/b	-3/2Fx	$3/2Fx-3/2Fx^2/b$	$1-2x/b+x^2/b^2$	$1/4Fb^2/EJ$	1/3Xb/EJ
AG b	x/b	3/2Fb-3/2Fx	$3/2Fx-3/2Fx^2/b$	x^2/b^2		
FH b	0	-1/2Fx	0	0	0	0
HF b	0	1/2Fb-1/2Fx	0	0		
HI b	1-x/b	-1/2Fb-1/2Fx	$-1/2Fb+1/2Fx^2/b$	$1-2x/b+x^2/b^2$	$-1/3Fb^2/EJ$	1/3Xb/EJ
IH b	-x/b	Fb-1/2Fx	$-Fx+1/2Fx^2/b$	x^2/b^2		
HG b	-1	0	0	1	0	Xb/EJ
GH b	1	0	0	1		
HG	elongazione asta $N_{1HG}\varepsilon_{HG}L_{HG}$				$-Fb^2/EJ$	
A	molla nodo $-V_{1A}(V_{0A}+XV_{1A})/k_A$				$-7/8Fb^2/EJ$	1/4Xb/EJ
	totali				$-47/24Fb^2/EJ$	23/12Xb/EJ
	iperstatica $X=W_{GA}$				47/46Fb	

Sviluppi di calcolo iperstatica

$$L^{XX}_{GA} = \int_o^b (1 - 2\,x/b + x^2/b^2)\ 1/EJ\ dx = [\,x - x^2/b + 1/3\,x^3/b^2\,]_o^b\ 1/EJ$$
$$= (\,b - b + 1/3\,b\,)\ 1/EJ = 1/3\ b/EJ$$

$$L^{XX}_{AG} = \int_o^b (\,x^2/b^2\,)\ 1/EJ\ dx = [1/3\,x^3/b^2\,]_o^b\ 1/EJ$$
$$= (1/3\,b\,)\ 1/EJ = 1/3\ b/EJ$$

$$L^{XX}_{HI} = \int_o^b (1 - 2\,x/b + x^2/b^2)\ 1/EJ\ dx = [\,x - x^2/b + 1/3\,x^3/b^2\,]_o^b\ 1/EJ$$
$$= (\,b - b + 1/3\,b\,)\ 1/EJ = 1/3\ b/EJ$$

$$L^{XX}_{IH} = \int_o^b (\,x^2/b^2\,)\ 1/EJ\ dx = [1/3\,x^3/b^2\,]_o^b\ 1/EJ$$
$$= (1/3\,b\,)\ 1/EJ = 1/3\ b/EJ$$

$$L^{XX}_{HG} = \int_o^b (1)\ 1/EJ\ dx = [\,x\,]_o^b\ 1/EJ$$
$$= (\,b\,)\ 1/EJ = b/EJ$$

$$L^{XX}_{GH} = \int_o^b (1)\ 1/EJ\ dx = [\,x\,]_o^b\ 1/EJ$$
$$= (\,b\,)\ 1/EJ = b/EJ$$

$$L^{Xo}_{GA} = \int_o^b (3/2\,x/b - 3/2\,x^2/b^2)\ Fb\ 1/EJ\ dx = [3/4\,x^2/b - 1/2\,x^3/b^2\,]_o^b\ Fb\ 1/EJ$$
$$= (3/4\,b - 1/2\,b\,)\ Fb\ 1/EJ = 1/4\ Fb^2/EJ$$

$$L^{Xo}_{AG} = \int_o^b (3/2\,x/b - 3/2\,x^2/b^2)\ Fb\ 1/EJ\ dx = [3/4\,x^2/b - 1/2\,x^3/b^2\,]_o^b\ Fb\ 1/EJ$$
$$= (3/4\,b - 1/2\,b\,)\ Fb\ 1/EJ = 1/4\ Fb^2/EJ$$

$$L^{Xo}_{HI} = \int_o^b (-1/2 + 1/2\,x^2/b^2)\ Fb\ 1/EJ\ dx = [-1/2\,x + 1/6\,x^3/b^2\,]_o^b\ Fb\ 1/EJ$$
$$= (-1/2\,b + 1/6\,b\,)\ Fb\ 1/EJ = -1/3\ Fb^2/EJ$$

$$L^{Xo}_{IH} = \int_o^b (-\,x/b + 1/2\,x^2/b^2)\ Fb\ 1/EJ\ dx = [-1/2\,x^2/b + 1/6\,x^3/b^2\,]_o^b\ Fb\ 1/EJ$$
$$= (-1/2\,b + 1/6\,b\,)\ Fb\ 1/EJ = -1/3\ Fb^2/EJ$$

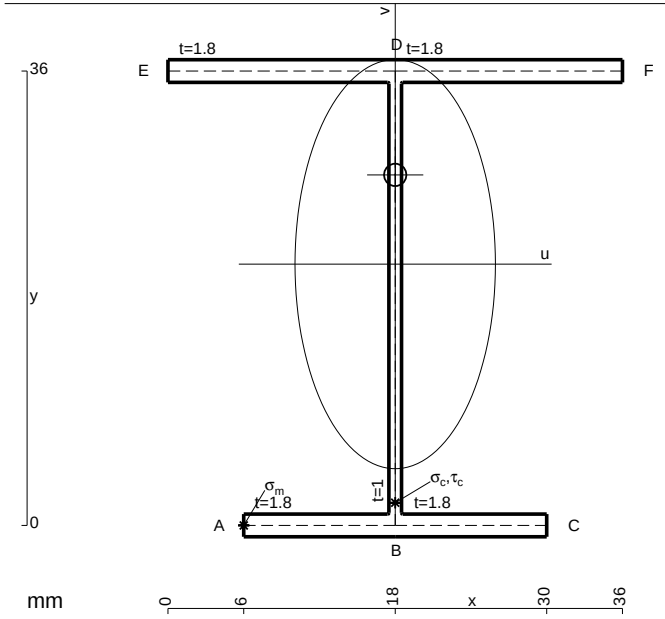

A = 144. mm^2
J_u = 37830. mm^4
J_v = 9072. mm^4
J_t = 128.6 mm^4
y_o = 7.071 mm
y_g = 20.7 mm
T_y = 1500. N
M_x = -382500. Nmm
x_m = 6. mm
u_m = -12. mm
v_m = -20.7 mm
$\sigma_m = -Mv/J_u$ = -209.3 N/mm^2
x_c = 18. mm
v_c = -20.7 mm
$\sigma_c = -Mv/J_u$ = -209.3 N/mm^2
$\tau_c = TS^*/tJ_u$ = 35.46 N/mm^2
$\tau_g = TS^*/tJ_u$ = 35.46 N/mm^2
t_c = 750. mm
$\sigma_o = \sqrt{\sigma^2 + 3\tau^2}$ = 218.1 N/mm^2

ESΣ05.xxxx.011

@ Adolfo Zavelani Rossi, Politecnico di Milano, vers.27.03.13 01.12.25

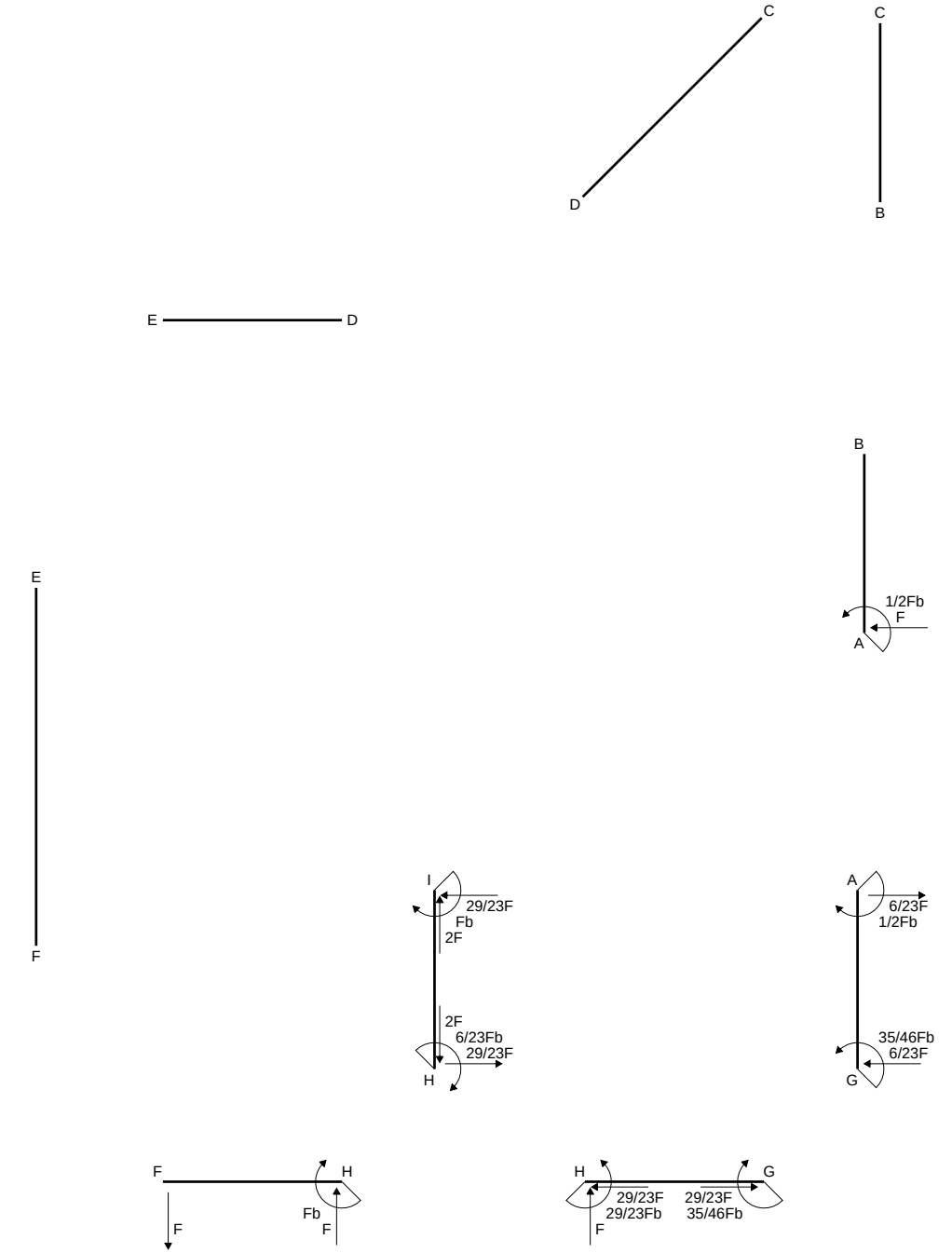
C
D
C
B
E
D
B
1/2Fb
F
A
E
F
I
29/23F
Fb
2F
2F
6/23Fb
29/23F
H
A
6/23F
1/2Fb
35/46Fb
6/23F
G
F
H
Fb
F
H
G
29/23F
29/23Fb
F
29/23F
35/46Fb

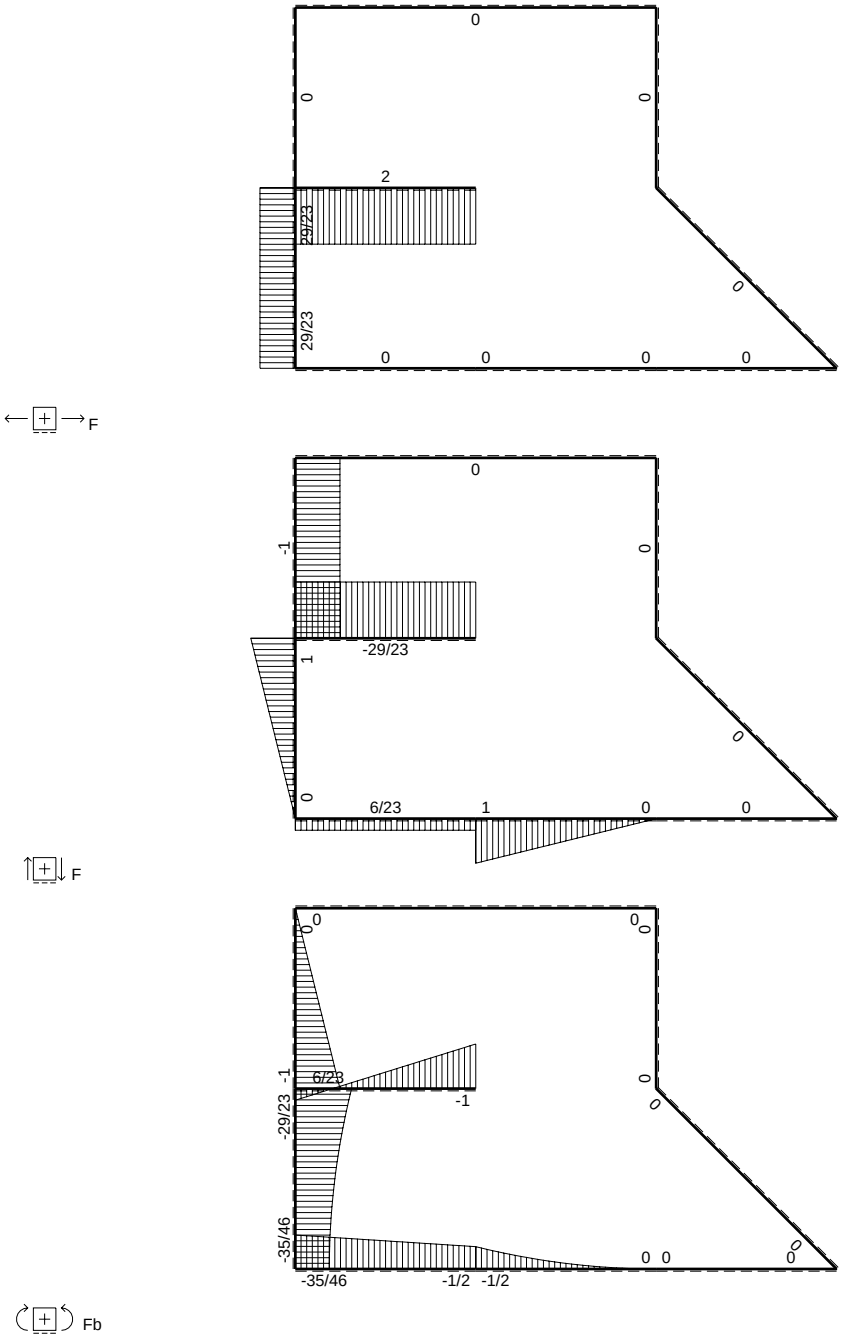
0
0
0
2
29/23
29/23
0
0
0
0
0
F
0
-1
0
-29/23
1
0
0
6/23
1
0
0
F
0
0
0
0
-1
6/23
-1
-29/23
0
0
-35/46
0 0
0
-35/46
-1/2 -1/2
Fb

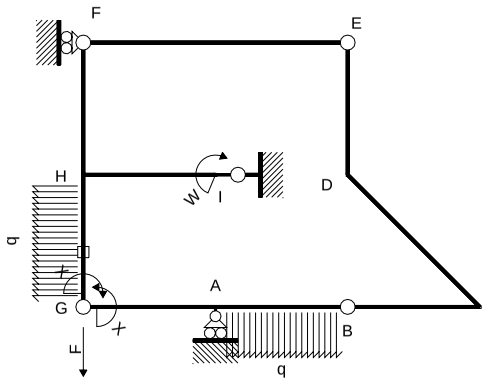

Schema di calcolo iperstatico

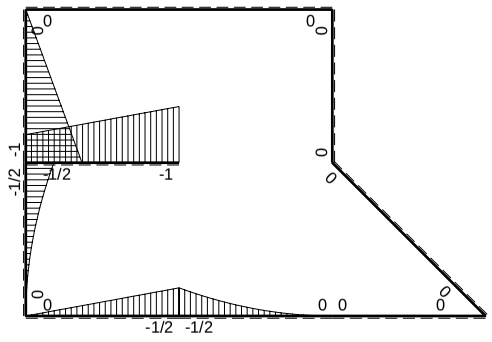

M_0 flessione da carichi assegnati

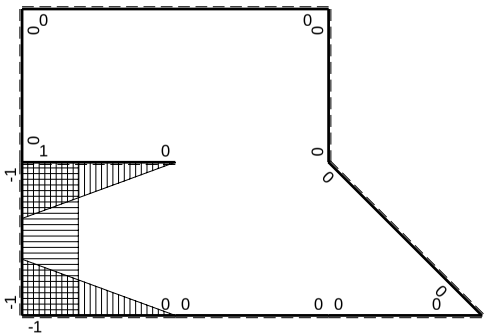

M_x flessione da iperstatica X=1

Quadro contributi PLV per iperstatica $X=W_{GA}$

→	$M_x(x)$	$M_o(x)$	M_xM_o	M_xM_x	$\int M_xM_o/EJdx$	$\int XM_xM_x/EJdx$
AB b	0	$-1/2Fb+Fx-1/2qx^2$	0	0	0	0
BA b	0	$1/2qx^2$	0	0		
BC b	0	0	0	0	0	0
CB b	0	0	0	0		
CD √2b	0	0	0	0	0	0
DE b	0	0	0	0	0	0
ED b	0	0	0	0		
EF 2b	0	0	0	0	0	0
FE 2b	0	0	0	0		
GA b	-1+x/b	-1/2Fx	$1/2Fx-1/2Fx^2/b$	$1-2x/b+x^2/b^2$	$1/12Fb^2/EJ$	1/3Xb/EJ
AG b	x/b	1/2Fb-1/2Fx	$1/2Fx-1/2Fx^2/b$	x^2/b^2		
FH b	0	-Fx	0	0	0	0
HF b	0	Fb-Fx	0	0		
HI b	1-x/b	-1/2Fb-1/2Fx	$-1/2Fb+1/2Fx^2/b$	$1-2x/b+x^2/b^2$	$-1/3Fb^2/EJ$	1/3Xb/EJ
IH b	-x/b	Fb-1/2Fx	$-Fx+1/2Fx^2/b$	x^2/b^2		
HG b	-1	$-1/2Fb+Fx-1/2qx^2$	$1/2Fb-Fx+1/2Fx^2/b$	1	$1/6Fb^2/EJ$	Xb/EJ
GH b	1	$1/2qx^2$	$1/2Fx^2/b$	1		
HG	elongazione asta $N_{1HG}\varepsilon_{HG}L_{HG}$				$-Fb^2/EJ$	
A	molla nodo $-V_{1A}(V_{0A}+XV_{1A})/k_A$				$-3/8Fb^2/EJ$	1/4Xb/EJ
	totali				$-35/24Fb^2/EJ$	23/12Xb/EJ
	iperstatica $X=W_{GA}$				35/46Fb	

Sviluppi di calcolo iperstatica

$L^{XX}_{GA} = \int_o^b (1 - 2\,x/b + x^2/b^2)\ 1/EJ\ dx = [\ x - x^2/b + 1/3\ x^3/b^2\ ]_o^b\ 1/EJ$

$= (\ b - b + 1/3\ b\ )\ 1/EJ\ = 1/3\ b/EJ$

$L^{XX}_{AG} = \int_o^b (\ x^2/b^2\ )\ 1/EJ\ dx = [1/3\ x^3/b^2\ ]_o^b\ 1/EJ$

$= (1/3\ b\ )\ 1/EJ\ = 1/3\ b/EJ$

$L^{XX}_{HI} = \int_o^b (1 - 2\,x/b + x^2/b^2)\ 1/EJ\ dx = [\ x - x^2/b + 1/3\ x^3/b^2\ ]_o^b\ 1/EJ$

$= (\ b - b + 1/3\ b\ )\ 1/EJ\ = 1/3\ b/EJ$

$L^{XX}_{IH} = \int_o^b (\ x^2/b^2\ )\ 1/EJ\ dx = [1/3\ x^3/b^2\ ]_o^b\ 1/EJ$

$= (1/3\ b\ )\ 1/EJ\ = 1/3\ b/EJ$

$L^{XX}_{HG} = \int_o^b (1\ )\ 1/EJ\ dx = [\ x\ ]_o^b\ 1/EJ$

$= (\ b\ )\ 1/EJ\ =\ b/EJ$

$L^{XX}_{GH} = \int_o^b (1\ )\ 1/EJ\ dx = [\ x\ ]_o^b\ 1/EJ$

$= (\ b\ )\ 1/EJ\ =\ b/EJ$

$L^{Xo}_{GA} = \int_o^b (1/2\ x/b - 1/2\ x^2/b^2\ )\ Fb\ 1/EJ\ dx = [1/4\ x^2/b - 1/6\ x^3/b^2\ ]_o^b\ Fb\ 1/EJ$

$= (1/4\ b - 1/6\ b\ )\ Fb\ 1/EJ\ = 1/12\ Fb^2/EJ$

$L^{Xo}_{AG} = \int_o^b (1/2\ x/b - 1/2\ x^2/b^2\ )\ Fb\ 1/EJ\ dx = [1/4\ x^2/b - 1/6\ x^3/b^2\ ]_o^b\ Fb\ 1/EJ$

$= (1/4\ b - 1/6\ b\ )\ Fb\ 1/EJ\ = 1/12\ Fb^2/EJ$

$L^{Xo}_{HI} = \int_o^b (-1/2 + 1/2\ x^2/b^2\ )\ Fb\ 1/EJ\ dx = [-1/2\ x + 1/6\ x^3/b^2\ ]_o^b\ Fb\ 1/EJ$

$= (-1/2\ b + 1/6\ b\ )\ Fb\ 1/EJ\ = -1/3\ Fb^2/EJ$

$L^{Xo}_{IH} = \int_o^b (-\ x/b + 1/2\ x^2/b^2\ )\ Fb\ 1/EJ\ dx = [-1/2\ x^2/b + 1/6\ x^3/b^2\ ]_o^b\ Fb\ 1/EJ$

$= (-1/2\ b + 1/6\ b\ )\ Fb\ 1/EJ\ = -1/3\ Fb^2/EJ$

$L^{Xo}_{HG} = \int_o^b (1/2 - x/b + 1/2\ x^2/b^2\ )\ Fb\ 1/EJ\ dx - 1\ \ (-1)\ \ (-1)\ \ Fb^2/EJ$

$= [1/2\ x - 1/2\ x^2/b + 1/6\ x^3/b^2\ ]_o^b\ Fb\ 1/EJ\ -\ 1\ \ (-1)\ \ (-1)\ \ Fb^2/EJ$

$= (1/2\ b - 1/2\ b + 1/6\ b\ )\ Fb\ 1/EJ\ -\ 1\ \ (-1)\ \ (-1)\ \ Fb^2/EJ = -5/6\ \ Fb^2/EJ$

$L^{Xo}_{GH} = \int_o^b (1/2\ x^2/b^2\ )\ Fb\ 1/EJ\ dx - 1\ \ (-1)\ \ (-1)\ \ Fb^2/EJ = [1/6\ x^3/b^2\ ]_o^b\ Fb\ 1/EJ\ -\ 1\ \ (-1)\ \ (-1)\ \ Fb^2/EJ$

$= (1/6\ b\ )\ Fb\ 1/EJ\ -\ 1\ \ (-1)\ \ (-1)\ \ Fb^2/EJ = -5/6\ \ Fb^2/EJ$

PROCEDIMENTO E RISULTATI 238503 ESΣ05.xxxx.012

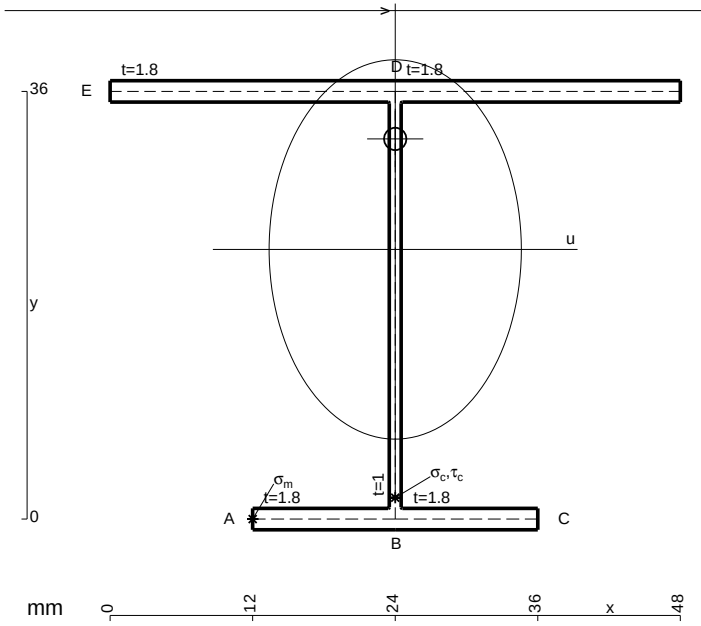

$A = 165.6\ mm^2$
$J_u = 42227.\ mm^4$
$J_v = 18662.\ mm^4$
$J_t = 152.\ mm^4$
$y_o = 9.304\ mm$
$y_g = 22.7\ mm$
$T_y = -1100.\ N$
$M_x = -407000.\ Nmm$
$x_m = 12.\ mm$
$u_m = -12.\ mm$
$v_m = -22.7\ mm$
$\sigma_m = -Mv/J_u = -218.7\ N/mm^2$
$x_c = 24.\ mm$
$v_c = -22.7\ mm$
$\sigma_c = -Mv/J_u = -218.7\ N/mm^2$
$\tau_c = TS^*/tJ_u = 25.54\ N/mm^2$
$\tau_g = TS^*/tJ_u = 25.54\ N/mm^2$
$t_c = 1100.\ mm$
$\sigma_o = \sqrt{\sigma^2 + 3\tau^2} = 223.2\ N/mm^2$

ESΣ05.xxxx.012

@ Adolfo Zavelani Rossi, Politecnico di Milano, vers.27.03.13 01.12.25

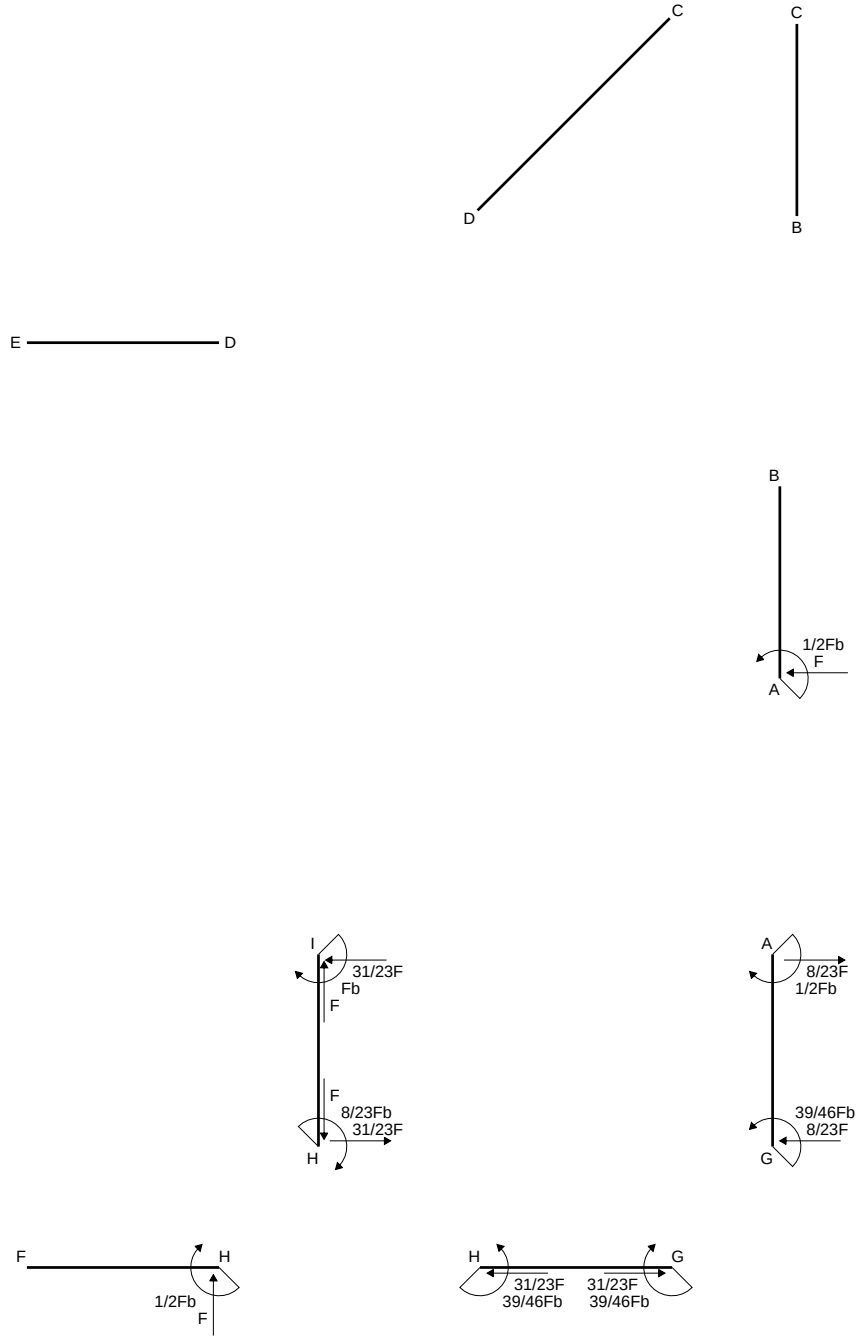
C
D
C
B
E
D
B
1/2Fb
F
A
E
F
I
31/23F
Fb
F
F
8/23Fb
31/23F
H
A
8/23F
1/2Fb
39/46Fb
8/23F
G
F
H
1/2Fb
F
H
G
31/23F
39/46Fb
31/23F
39/46Fb

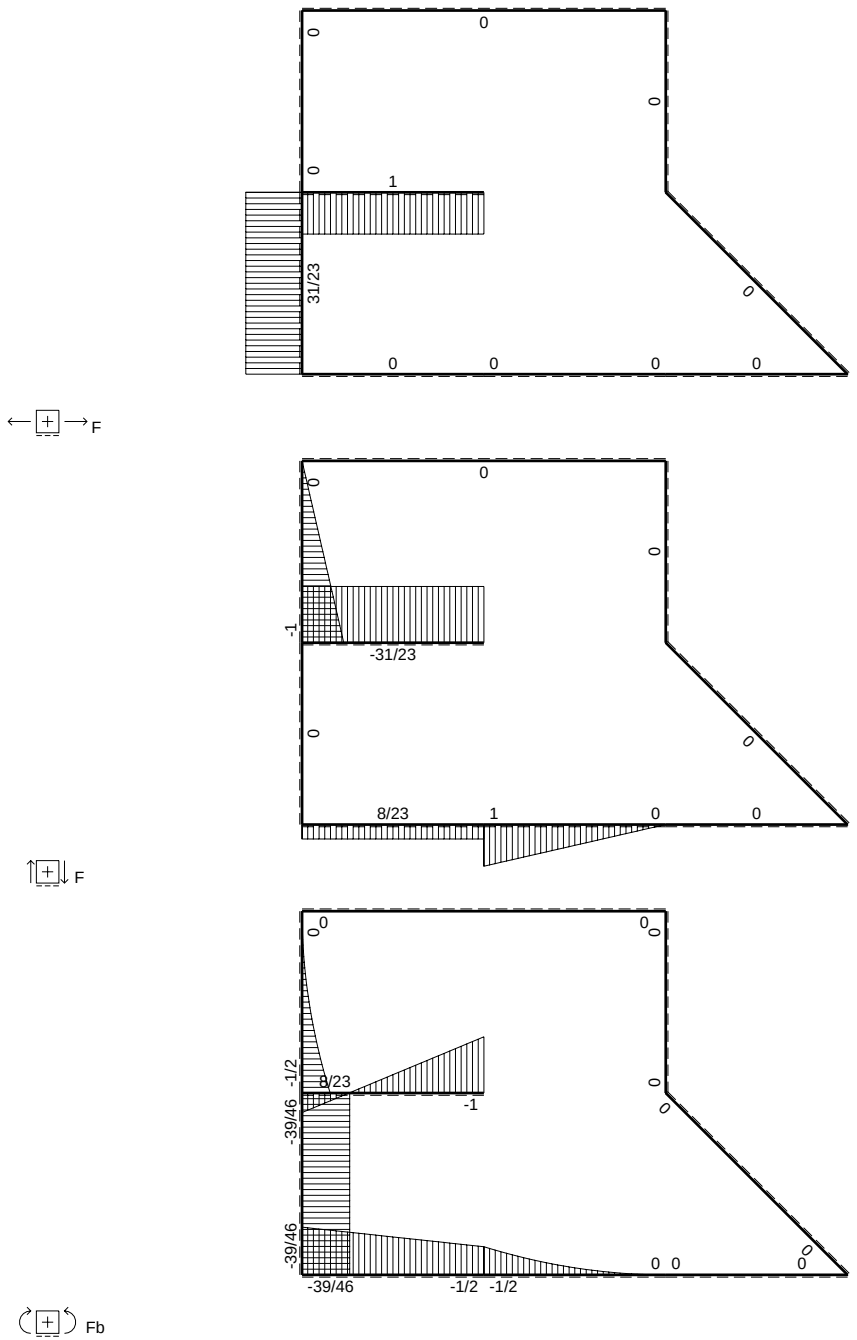
0
0
0
0
1
31/23
0
0
0
0
0
F
0
0
0
0
-1
-31/23
0
0
8/23
1
0
0
F
0
0
0
0
-1/2
8/23
-1
-39/46
0
0
-39/46
0 0
0
-39/46
-1/2 -1/2
Fb

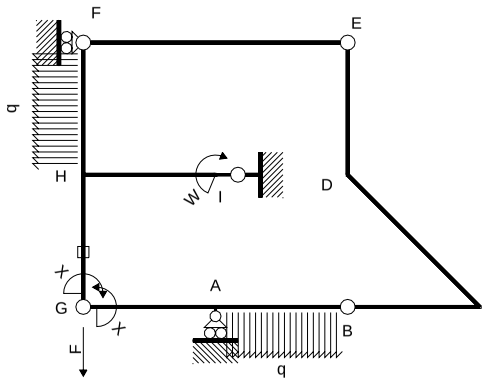

Schema di calcolo iperstatico

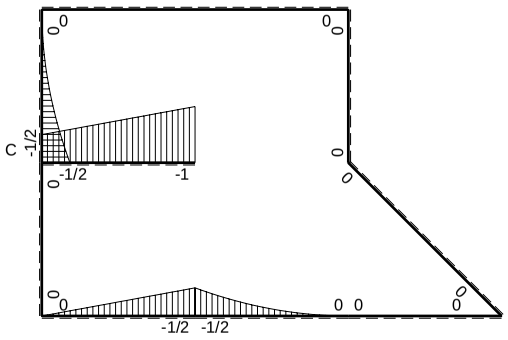

M_0 flessione da carichi assegnati

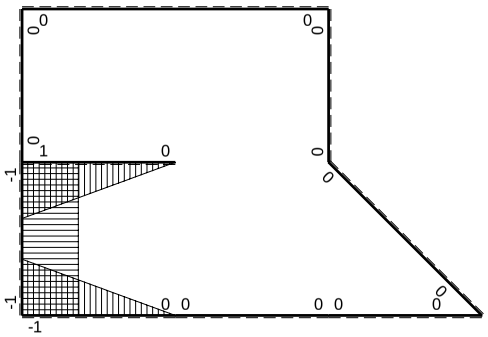

M_x flessione da iperstatica X=1

Quadro contributi PLV per iperstatica $X=W_{GA}$

→	$M_x(x)$	$M_0(x)$	M_xM_0	M_xM_x	$\int M_xM_0/EJdx$	$\int XM_xM_x/EJdx$
AB b	0	$-1/2Fb+Fx-1/2qx^2$	0	0	0	0
BA b	0	$1/2qx^2$	0	0		
BC b	0	0	0	0	0	0
CB b	0	0	0	0		
CD $\sqrt{2}$b	0	0	0	0	0	0
DE b	0	0	0	0	0	0
ED b	0	0	0	0		
EF 2b	0	0	0	0	0	0
FE 2b	0	0	0	0		
GA b	-1+x/b	-1/2Fx	$1/2Fx-1/2Fx^2/b$	$1-2x/b+x^2/b^2$	$1/12Fb^2/EJ$	1/3Xb/EJ
AG b	x/b	1/2Fb-1/2Fx	$1/2Fx-1/2Fx^2/b$	x^2/b^2		
FH b	0	$-1/2qx^2$	0	0	0	0
HF b	0	$1/2Fb-Fx+1/2qx^2$	0	0		
HI b	1-x/b	-1/2Fb-1/2Fx	$-1/2Fb+1/2Fx^2/b$	$1-2x/b+x^2/b^2$	$-1/3Fb^2/EJ$	1/3Xb/EJ
IH b	-x/b	Fb-1/2Fx	$-Fx+1/2Fx^2/b$	x^2/b^2		
HG b	-1	0	0	1	0	Xb/EJ
GH b	1	0	0	1		
HG	elongazione asta $N_{1HG}\varepsilon_{HG}L_{HG}$				$-Fb^2/EJ$	
A	molla nodo $-V_{1A}(V_{0A}+XV_{1A})/k_A$				$-3/8Fb^2/EJ$	1/4Xb/EJ
	totali				$-13/8Fb^2/EJ$	$23/12Xb/EJ$
	iperstatica $X=W_{GA}$				39/46Fb	

Sviluppi di calcolo iperstatica

$L^{XX}_{GA} = \int_o^b (1 - 2\,x/b + x^2/b^2)\ 1/EJ\ dx = [\ x - x^2/b + 1/3\ x^3/b^2\ ]_o^b\ 1/EJ$

$= (\ b - b + 1/3\ b\ )\ 1/EJ\ = 1/3\ b/EJ$

$L^{XX}_{AG} = \int_o^b (\ x^2/b^2\ )\ 1/EJ\ dx = [1/3\ x^3/b^2\ ]_o^b\ 1/EJ$

$= (1/3\ b\ )\ 1/EJ\ = 1/3\ b/EJ$

$L^{XX}_{HI} = \int_o^b (1 - 2\,x/b + x^2/b^2)\ 1/EJ\ dx = [\ x - x^2/b + 1/3\ x^3/b^2\ ]_o^b\ 1/EJ$

$= (\ b - b + 1/3\ b\ )\ 1/EJ\ = 1/3\ b/EJ$

$L^{XX}_{IH} = \int_o^b (\ x^2/b^2\ )\ 1/EJ\ dx = [1/3\ x^3/b^2\ ]_o^b\ 1/EJ$

$= (1/3\ b\ )\ 1/EJ\ = 1/3\ b/EJ$

$L^{XX}_{HG} = \int_o^b (1\ )\ 1/EJ\ dx = [\ x\ ]_o^b\ 1/EJ$

$= (\ b\ )\ 1/EJ\ =\ b/EJ$

$L^{XX}_{GH} = \int_o^b (1\ )\ 1/EJ\ dx = [\ x\ ]_o^b\ 1/EJ$

$= (\ b\ )\ 1/EJ\ =\ b/EJ$

$L^{Xo}_{GA} = \int_o^b (1/2\ x/b - 1/2\ x^2/b^2)\ Fb\ 1/EJ\ dx = [1/4\ x^2/b - 1/6\ x^3/b^2\ ]_o^b\ Fb\ 1/EJ$

$= (1/4\ b - 1/6\ b\ )\ Fb\ 1/EJ\ = 1/12\ Fb^2/EJ$

$L^{Xo}_{AG} = \int_o^b (1/2\ x/b - 1/2\ x^2/b^2)\ Fb\ 1/EJ\ dx = [1/4\ x^2/b - 1/6\ x^3/b^2\ ]_o^b\ Fb\ 1/EJ$

$= (1/4\ b - 1/6\ b\ )\ Fb\ 1/EJ\ = 1/12\ Fb^2/EJ$

$L^{Xo}_{HI} = \int_o^b (-1/2 + 1/2\ x^2/b^2)\ Fb\ 1/EJ\ dx = [-1/2\ x + 1/6\ x^3/b^2\ ]_o^b\ Fb\ 1/EJ$

$= (-1/2\ b + 1/6\ b\ )\ Fb\ 1/EJ\ = -1/3\ Fb^2/EJ$

$L^{Xo}_{IH} = \int_o^b (-\ x/b + 1/2\ x^2/b^2)\ Fb\ 1/EJ\ dx = [-1/2\ x^2/b + 1/6\ x^3/b^2\ ]_o^b\ Fb\ 1/EJ$

$= (-1/2\ b + 1/6\ b\ )\ Fb\ 1/EJ\ = -1/3\ Fb^2/EJ$

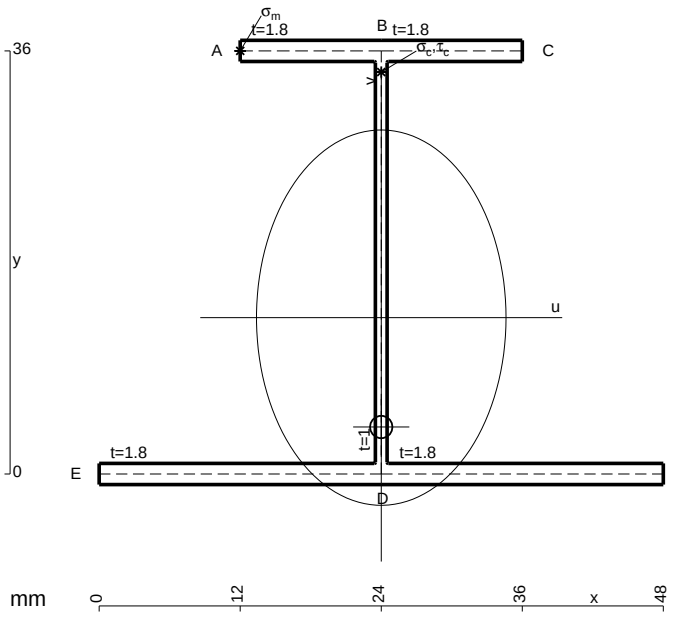

A = 165.6 mm^2
J_u = 42227. mm^4
J_v = 18662. mm^4
J_t = 152. mm^4
y_o = -9.304 mm
y_g = 13.3 mm
T_y = 2130. N
M_x = -426000. Nmm
x_m = 12. mm
y_m = 36. mm
u_m = -12. mm
v_m = 22.7 mm
$\sigma_m = -Mv/J_u$ = 229. N/mm^2
x_c = 24. mm
y_c = 36. mm
v_c = 22.7 mm
$\sigma_c = -Mv/J_u$ = 229. N/mm^2
$\tau_c = TS^*/tJ_u$ = 49.46 N/mm^2
$\tau_g = TS^*/tJ_u$ = 49.46 N/mm^2
t_c = 2130. mm
$\sigma_o = \sqrt{\sigma^2 + 3\tau^2}$ = 244.5 N/mm^2

ESΣ05.xxxx.013

@ Adolfo Zavelani Rossi, Politecnico di Milano, vers.27.03.13 01.12.25

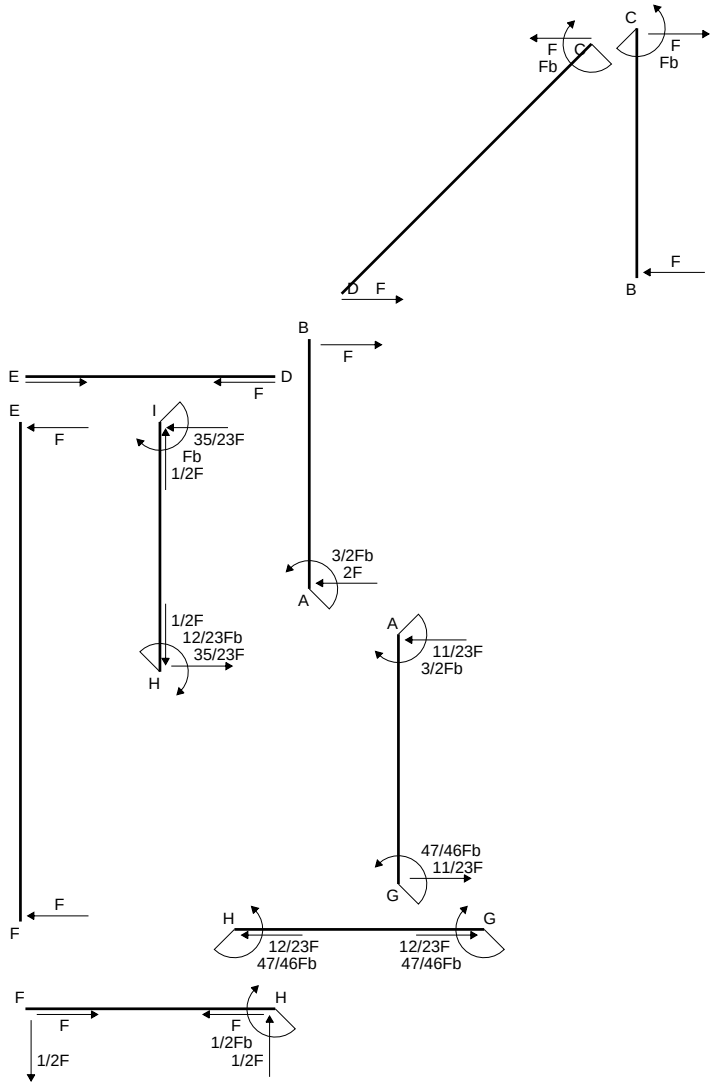
C
F
Fb
C
F
Fb
F
D
F
B
B
F
E
D
F
E
F
I
35/23F
Fb
1/2F
3/2Fb
2F
A
1/2F
12/23Fb
35/23F
H
A
11/23F
3/2Fb
47/46Fb
11/23F
G
F
F
H
G
12/23F
47/46Fb
12/23F
47/46Fb
F
H
F
F
1/2Fb
1/2F
1/2F

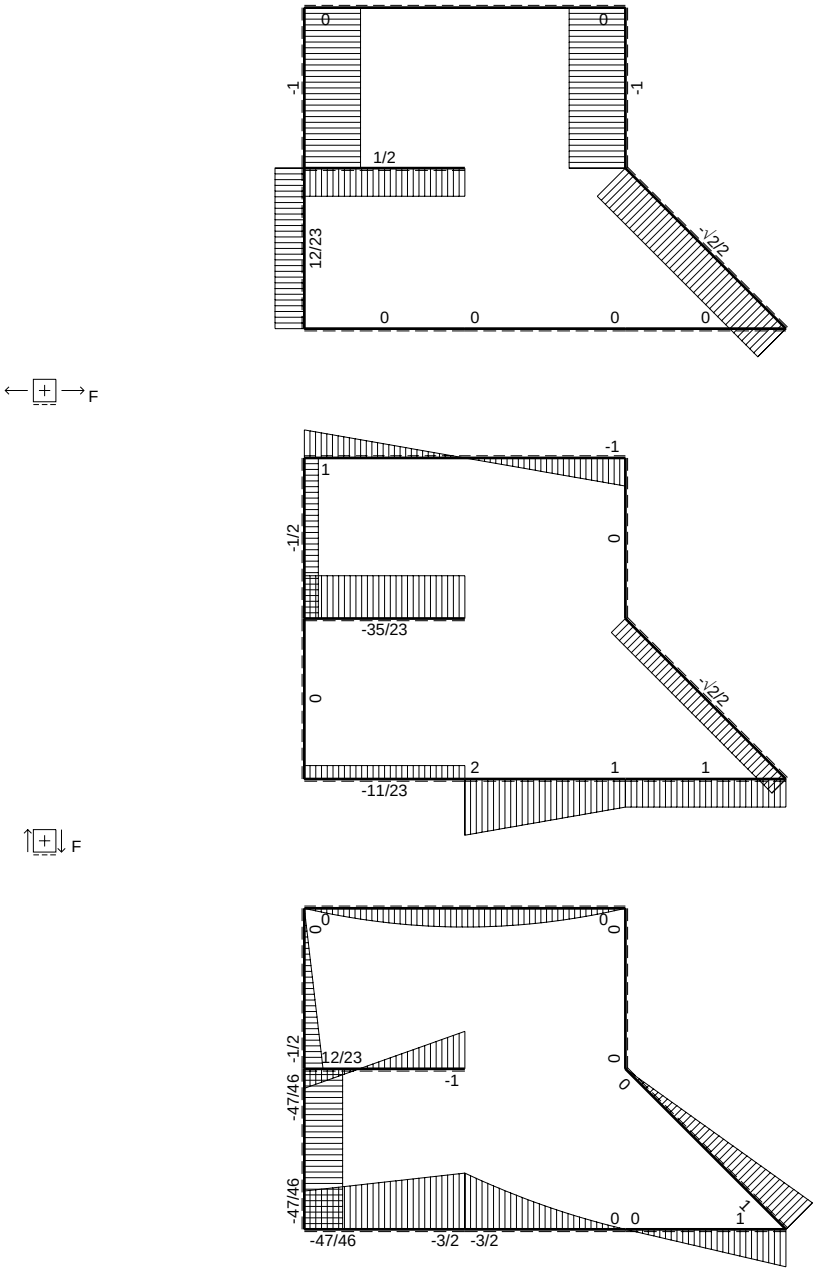
0
0
-1
-1
1/2
12/23
-1/2
0
0
0
0
F
-1
1
-1/2
0
-35/23
0
-1/2
2
1
1
-11/23
F
0
0
0
0
-1/2
12/23
-1
-47/46
0
0
-47/46
0 0
1
-1
-47/46
-3/2
-3/2
Fb

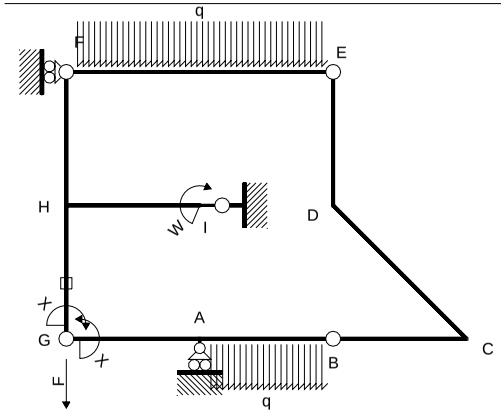

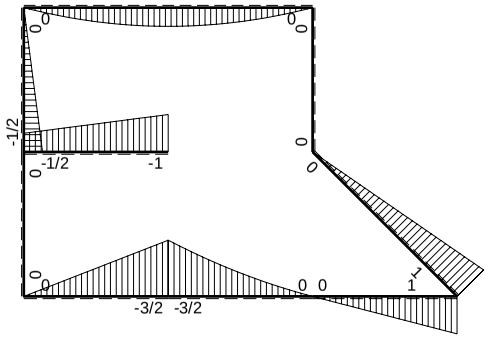

M_0 flessione da carichi assegnati

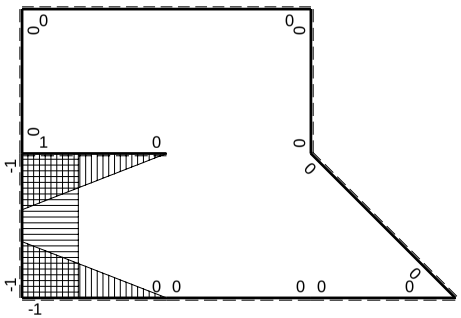

M_x flessione da iperstatica X=1

Quadro contributi PLV per iperstatica $X=W_{GA}$

→	$M_x(x)$	$M_o(x)$	M_xM_o	M_xM_x	$\int M_xM_o/EJdx$	$\int XM_xM_x/EJdx$
AB b	0	$-3/2Fb+2Fx-1/2qx^2$	0	0	0	0
BA b	0	$Fx+1/2qx^2$	0	0		
BC b	0	Fx	0	0	0	0
CB b	0	$-Fb+Fx$	0	0		
CD $\sqrt{2}b$	0	$Fb-\sqrt{2}/2Fx$	0	0	0	0
DE b	0	0	0	0	0	0
ED b	0	0	0	0		
EF 2b	0	$-Fx+1/2qx^2$	0	0	0	0
FE 2b	0	$Fx-1/2qx^2$	0	0		
GA b	-1+x/b	-3/2Fx	$3/2Fx-3/2Fx^2/b$	$1-2x/b+x^2/b^2$	$1/4Fb^2/EJ$	1/3Xb/EJ
AG b	x/b	3/2Fb-3/2Fx	$3/2Fx-3/2Fx^2/b$	x^2/b^2		
FH b	0	-1/2Fx	0	0	0	0
HF b	0	1/2Fb-1/2Fx	0	0		
HI b	1-x/b	-1/2Fb-1/2Fx	$-1/2Fb+1/2Fx^2/b$	$1-2x/b+x^2/b^2$	$-1/3Fb^2/EJ$	1/3Xb/EJ
IH b	-x/b	Fb-1/2Fx	$-Fx+1/2Fx^2/b$	x^2/b^2		
HG b	-1	0	0	1	0	Xb/EJ
GH b	1	0	0	1		
HG	elongazione asta $N_{1HG}\varepsilon_{HG}L_{HG}$				$-Fb^2/EJ$	
A	molla nodo $-V_{1A}(V_{0A}+XV_{1A})/k_A$				$-7/8Fb^2/EJ$	1/4Xb/EJ
	totali				$-47/24Fb^2/EJ$	23/12Xb/EJ
	iperstatica $X=W_{GA}$				47/46Fb	

Sviluppi di calcolo iperstatica

$L^{XX}_{GA} = \int_o^b (1 - 2\,x/b + x^2/b^2)\ 1/EJ\ dx = [\,x - x^2/b + 1/3\,x^3/b^2\,]_o^b\ 1/EJ$

$= (\,b - b + 1/3\,b\,)\ 1/EJ\ = 1/3\ b/EJ$

$L^{XX}_{AG} = \int_o^b (\,x^2/b^2\,)\ 1/EJ\ dx = [1/3\,x^3/b^2\,]_o^b\ 1/EJ$

$= (1/3\,b\,)\ 1/EJ\ = 1/3\ b/EJ$

$L^{XX}_{HI} = \int_o^b (1 - 2\,x/b + x^2/b^2)\ 1/EJ\ dx = [\,x - x^2/b + 1/3\,x^3/b^2\,]_o^b\ 1/EJ$

$= (\,b - b + 1/3\,b\,)\ 1/EJ\ = 1/3\ b/EJ$

$L^{XX}_{IH} = \int_o^b (\,x^2/b^2\,)\ 1/EJ\ dx = [1/3\,x^3/b^2\,]_o^b\ 1/EJ$

$= (1/3\,b\,)\ 1/EJ\ = 1/3\ b/EJ$

$L^{XX}_{HG} = \int_o^b (1)\ 1/EJ\ dx = [\,x\,]_o^b\ 1/EJ$

$= (\,b\,)\ 1/EJ\ = b/EJ$

$L^{XX}_{GH} = \int_o^b (1)\ 1/EJ\ dx = [\,x\,]_o^b\ 1/EJ$

$= (\,b\,)\ 1/EJ\ = b/EJ$

$L^{Xo}_{GA} = \int_o^b (3/2\,x/b - 3/2\,x^2/b^2)\ Fb\ 1/EJ\ dx = [3/4\,x^2/b - 1/2\,x^3/b^2\,]_o^b\ Fb\ 1/EJ$

$= (3/4\,b - 1/2\,b\,)\ Fb\ 1/EJ\ = 1/4\ Fb^2/EJ$

$L^{Xo}_{AG} = \int_o^b (3/2\,x/b - 3/2\,x^2/b^2)\ Fb\ 1/EJ\ dx = [3/4\,x^2/b - 1/2\,x^3/b^2\,]_o^b\ Fb\ 1/EJ$

$= (3/4\,b - 1/2\,b\,)\ Fb\ 1/EJ\ = 1/4\ Fb^2/EJ$

$L^{Xo}_{HI} = \int_o^b (-1/2 + 1/2\,x^2/b^2)\ Fb\ 1/EJ\ dx = [-1/2\,x + 1/6\,x^3/b^2\,]_o^b\ Fb\ 1/EJ$

$= (-1/2\,b + 1/6\,b\,)\ Fb\ 1/EJ\ = -1/3\ Fb^2/EJ$

$L^{Xo}_{IH} = \int_o^b (-\,x/b + 1/2\,x^2/b^2)\ Fb\ 1/EJ\ dx = [-1/2\,x^2/b + 1/6\,x^3/b^2\,]_o^b\ Fb\ 1/EJ$

$= (-1/2\,b + 1/6\,b\,)\ Fb\ 1/EJ\ = -1/3\ Fb^2/EJ$

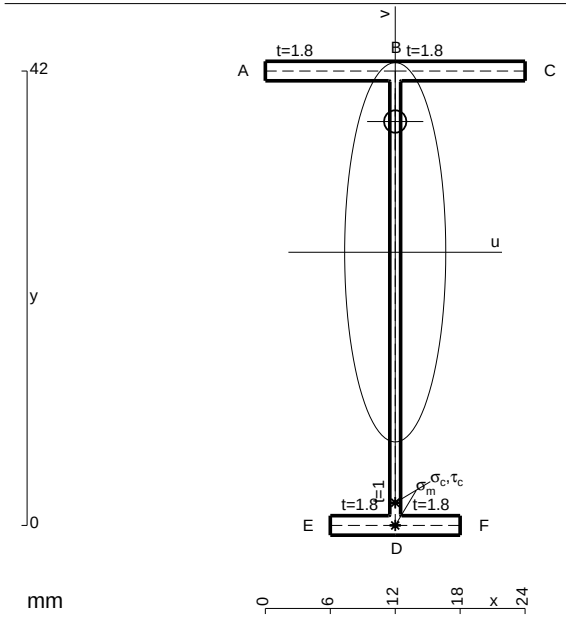

A = 106.8 mm^2
J_u = 32824. mm^4
J_v = 2333. mm^4
J_t = 83.98 mm^4
y_o = 12.09 mm
y_g = 25.25 mm
T_y = 820. N
M_x = -307500. Nmm
x_m = 12. mm
v_m = -25.25 mm
$\sigma_m = -Mv/J_u$ = -236.5 N/mm^2
y_c = 3. mm
u_c = -12. mm
v_c = -22.25 mm
$\sigma_c = -Mv/J_u$ = -236.5 N/mm^2
$\tau_c = TS^*/tJ_u$ = 13.62 N/mm^2
$\tau_g = TS^*/tJ_u$ = 13.62 N/mm^2
t_c = 410. mm
$\sigma_o = \sqrt{\sigma^2 + 3\tau^2}$ = 237.7 N/mm^2

ESΣ05.xxxx.014

@ Adolfo Zavelani Rossi, Politecnico di Milano, vers.27.03.13 01.12.25

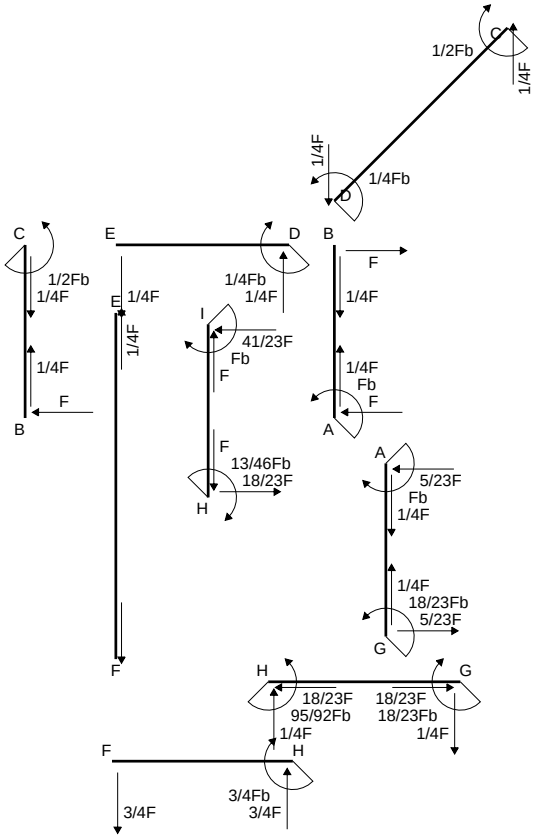
C
1/2Fb
1/4F
B
F
E
1/4F
D
1/4Fb
1/4F
I
41/23F
Fb
F
H
13/46Fb
18/23F
A
5/23F
Fb
1/4F
G
18/23Fb
5/23F
18/23F
95/92Fb
1/4F
18/23F
18/23Fb
1/4F
3/4Fb
3/4F

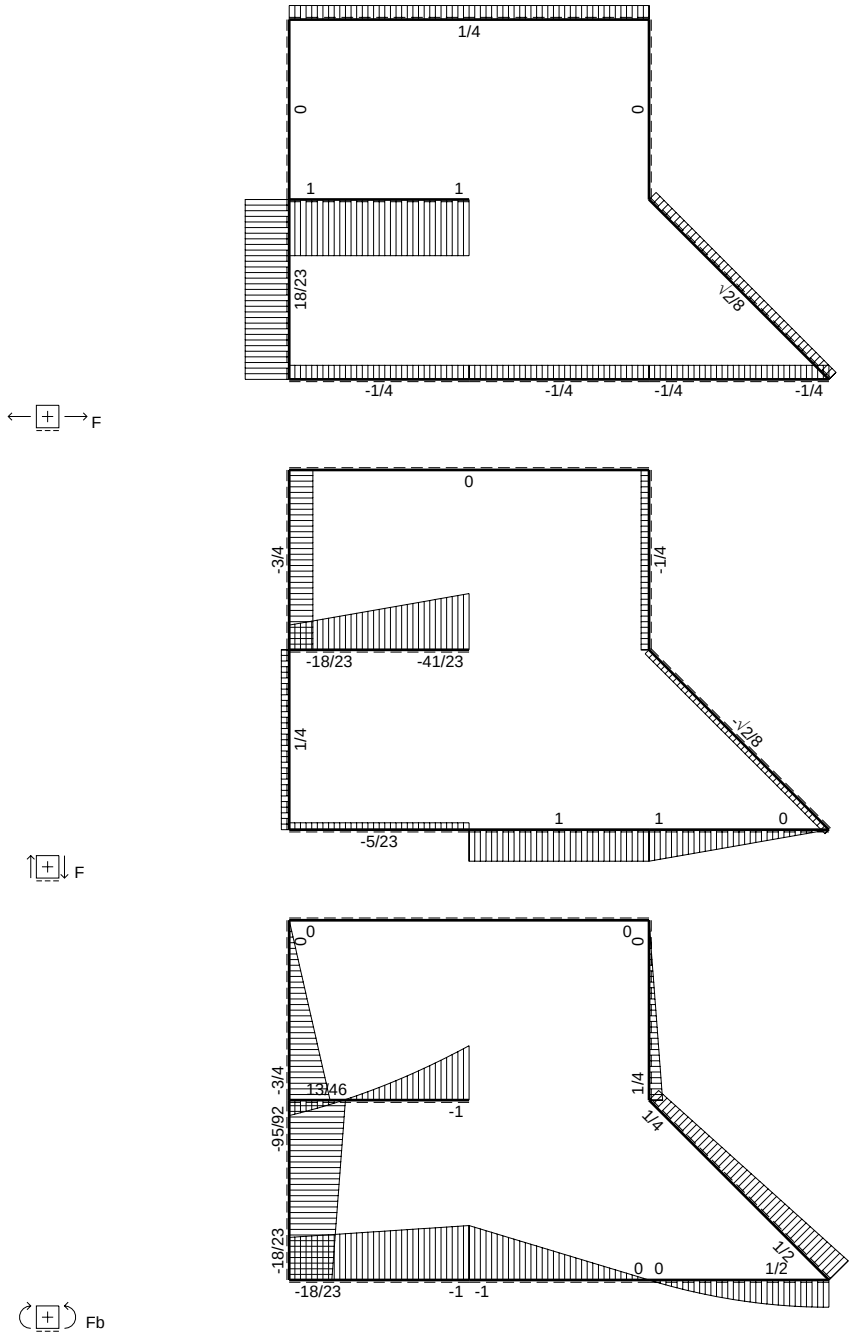
F
1/4
0
1
18/23
√2/8
-1/4
F
0
-3/4
-18/23
-41/23
-√2/8
1/4
-5/23
Fb
-95/92
13/46
-18/23
1/2

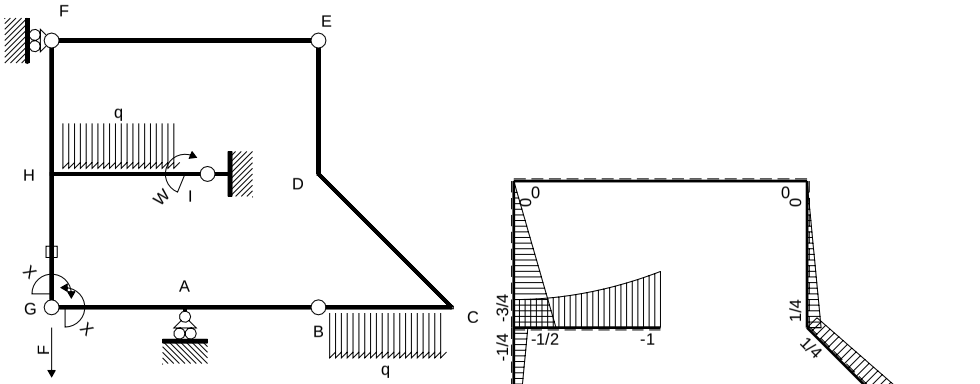

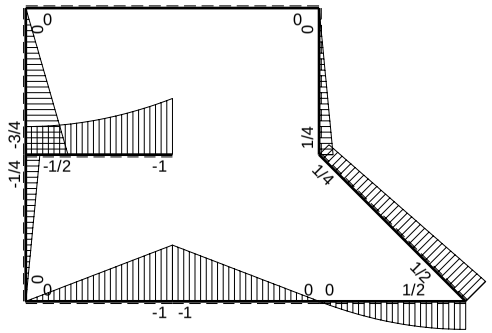

M_0 flessione da carichi assegnati

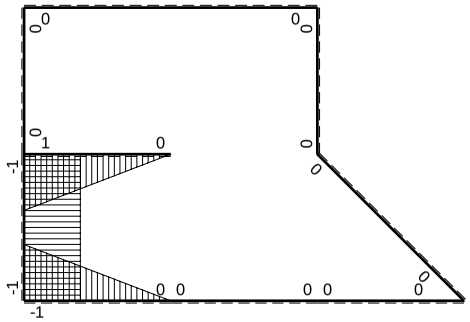

M_x flessione da iperstatica X=1

PROCEDIMENTO E RISULTATI 995596 ESΣ05.xxxx.015

@ Adolfo Zavelani Rossi, Politecnico di Milano, vers.27.03.13 01.12.25

Quadro contributi PLV per iperstatica $X=W_{GA}$

→	$M_x(x)$	$M_o(x)$	M_xM_o	M_xM_x	$\int M_xM_o/EJdx$	$\int XM_xM_x/EJdx$
AB b	0	-Fb+Fx	0	0	0	0
BA b	0	Fx	0	0		
BC b	0	$Fx-1/2qx^2$	0	0	0	0
CB b	0	$-1/2Fb+1/2qx^2$	0	0		
CD √2b	0	1/2Fb-√2/8Fx	0	0	0	0
DE b	0	1/4Fb-1/4Fx	0	0	0	0
ED b	0	-1/4Fx	0	0		
EF 2b	0	0	0	0	0	0
FE 2b	0	0	0	0		
GA b	-1+x/b	-Fx	$Fx-Fx^2/b$	$1-2x/b+x^2/b^2$	$1/6Fb^2/EJ$	1/3Xb/EJ
AG b	x/b	Fb-Fx	$Fx-Fx^2/b$	x^2/b^2		
FH b	0	-3/4Fx	0	0	0	0
HF b	0	3/4Fb-3/4Fx	0	0		
HI b	1-x/b	$-1/2Fb-1/2qx^2$	$-1/2Fb+1/2Fx-1/2Fx^2/b+1/2qx^3/b$	$1-2x/b+x^2/b^2$	$-7/24Fb^2/EJ$	1/3Xb/EJ
IH b	-x/b	$Fb-Fx+1/2qx^2$	$-Fx+Fx^2/b-1/2qx^3/b$	x^2/b^2		
HG b	-1	-1/4Fb+1/4Fx	1/4Fb-1/4Fx	1	$1/8Fb^2/EJ$	Xb/EJ
GH b	1	1/4Fx	1/4Fx	1		
HG	elongazione asta $N_{1HG}\varepsilon_{HG}L_{HG}$				$-Fb^2/EJ$	
A	molla nodo $-V_{1A}(V_{oA}+XV_{1A})/k_A$				$-1/2Fb^2/EJ$	1/4Xb/EJ
	totali				$-3/2Fb^2/EJ$	23/12Xb/EJ
	iperstatica $X=W_{GA}$				18/23Fb	

PROCEDIMENTO E RISULTATI 995596 ESΣ05.xxxx.015

Sviluppi di calcolo iperstatica

@ Adolfo Zavelani Rossi, Politecnico di Milano, vers.27.03.13 01.12.25

$L^{XX}_{GA} = \int_o^b (1 - 2\,x/b + x^2/b^2)\ 1/EJ\ dx = [\ x - x^2/b + 1/3\ x^3/b^2\ ]_o^b\ 1/EJ$

$= (\ b - b + 1/3\ b\ )\ 1/EJ\ = 1/3\ b/EJ$

$L^{XX}_{AG} = \int_o^b (\ x^2/b^2\ )\ 1/EJ\ dx = [1/3\ x^3/b^2\ ]_o^b\ 1/EJ$

$= (1/3\ b\ )\ 1/EJ\ = 1/3\ b/EJ$

$L^{XX}_{HI} = \int_o^b (1 - 2\,x/b + x^2/b^2)\ 1/EJ\ dx = [\ x - x^2/b + 1/3\ x^3/b^2\ ]_o^b\ 1/EJ$

$= (\ b - b + 1/3\ b\ )\ 1/EJ\ = 1/3\ b/EJ$

$L^{XX}_{IH} = \int_o^b (\ x^2/b^2\ )\ 1/EJ\ dx = [1/3\ x^3/b^2\ ]_o^b\ 1/EJ$

$= (1/3\ b\ )\ 1/EJ\ = 1/3\ b/EJ$

$L^{XX}_{HG} = \int_o^b (1\ )\ 1/EJ\ dx = [\ x\ ]_o^b\ 1/EJ$

$= (\ b\ )\ 1/EJ\ =\ b/EJ$

$L^{XX}_{GH} = \int_o^b (1\ )\ 1/EJ\ dx = [\ x\ ]_o^b\ 1/EJ$

$= (\ b\ )\ 1/EJ\ =\ b/EJ$

$L^{Xo}_{GA} = \int_o^b (\ x/b - x^2/b^2\ )\ Fb\ 1/EJ\ dx = [1/2\ x^2/b - 1/3\ x^3/b^2\ ]_o^b\ Fb\ 1/EJ$

$= (1/2\ b - 1/3\ b\ )\ Fb\ 1/EJ\ = 1/6\ \ Fb^2/EJ$

$L^{Xo}_{AG} = \int_o^b (\ x/b - x^2/b^2\ )\ Fb\ 1/EJ\ dx = [1/2\ x^2/b - 1/3\ x^3/b^2\ ]_o^b\ Fb\ 1/EJ$

$= (1/2\ b - 1/3\ b\ )\ Fb\ 1/EJ\ = 1/6\ \ Fb^2/EJ$

$L^{Xo}_{HI} = \int_o^b (-1/2 + 1/2\ x/b - 1/2\ x^2/b^2 + 1/2\ x^3/b^3\ )\ Fb\ 1/EJ\ dx$

$= [-1/2\ x + 1/4\ x^2/b - 1/6\ x^3/b^2 + 1/8\ x^4/b^3\ ]_o^b\ Fb\ 1/EJ$

$= (-1/2\ b + 1/4\ b - 1/6\ b + 1/8\ b\ )\ Fb\ 1/EJ\ = -7/24\ \ Fb^2/EJ$

$L^{Xo}_{IH} = \int_o^b (-\ x/b + x^2/b^2 - 1/2\ x^3/b^3\ )\ Fb\ 1/EJ\ dx = [-1/2\ x^2/b + 1/3\ x^3/b^2 - 1/8\ x^4/b^3\ ]_o^b\ Fb\ 1/EJ$

$= (-1/2\ b + 1/3\ b - 1/8\ b\ )\ Fb\ 1/EJ\ = -7/24\ \ Fb^2/EJ$

$L^{Xo}_{HG} = \int_o^b (1/4 - 1/4\ x/b\ )\ Fb\ 1/EJ\ dx - 1\ \ (-1)\ \ (-1)\ \ Fb^2/EJ$

$= [1/4\ x - 1/8\ x^2/b\ ]_o^b\ Fb\ 1/EJ\ -\ 1\ \ (-1)\ \ (-1)\ \ Fb^2/EJ$

$= (1/4\ b - 1/8\ b\ )\ Fb\ 1/EJ\ -\ 1\ \ (-1)\ \ (-1)\ \ Fb^2/EJ = -7/8\ \ Fb^2/EJ$

$L^{Xo}_{GH} = \int_o^b (1/4\ x/b\ )\ Fb\ 1/EJ\ dx - 1\ \ (-1)\ \ (-1)\ \ Fb^2/EJ = [1/8\ x^2/b\ ]_o^b\ Fb\ 1/EJ\ -\ 1\ \ (-1)\ \ (-1)\ \ Fb^2/EJ$

$= (1/8\ b\ )\ Fb\ 1/EJ\ -\ 1\ \ (-1)\ \ (-1)\ \ Fb^2/EJ = -7/8\ \ Fb^2/EJ$

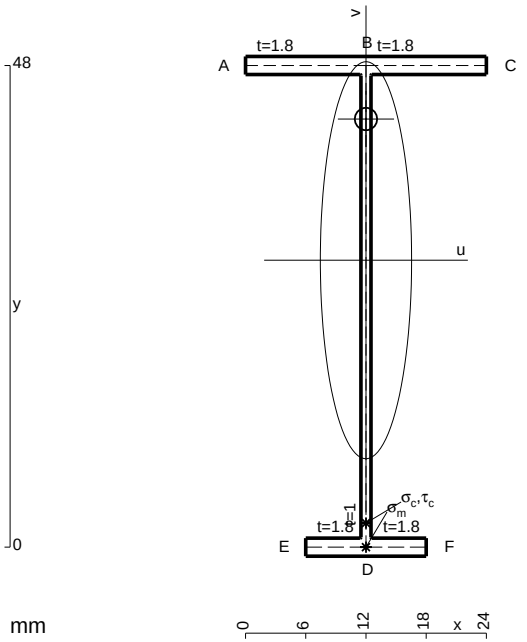

A = 112.8 mm^2
J_u = 44158. mm^4
J_v = 2333. mm^4
J_t = 85.98 mm^4
y_o = 14.07 mm
y_g = 28.6 mm
N = -125. N
T_y = 500. N
M_x = -305000. Nmm
x_m = 12. mm
v_m = -28.6 mm
$\sigma_m = N/A - Mv/J_u$ = -198.6 N/mm^2
y_c = 3. mm
u_c = -12. mm
v_c = -25.6 mm
$\sigma_c = N/A - Mv/J_u$ = -198.6 N/mm^2
$\tau_c = TS^*/tJ_u$ = 6.994 N/mm^2
$\tau_g = TS^*/tJ_u$ = 6.994 N/mm^2
t_c = 500. mm
$\sigma_o = \sqrt{\sigma^2 + 3\tau^2}$ = 199. N/mm^2

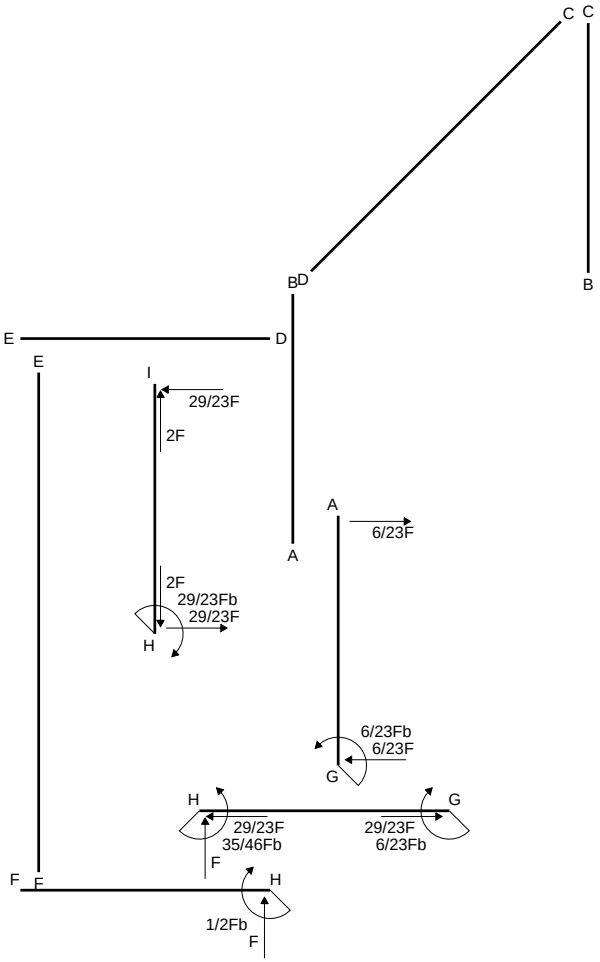
C C
B D
B
E
D
E
I
29/23F
2F
A
6/23F
A
2F
29/23Fb
29/23F
H
6/23Fb
6/23F
G
H
G
29/23F
35/46Fb
29/23F
6/23Fb
F
F F
H
1/2Fb
F

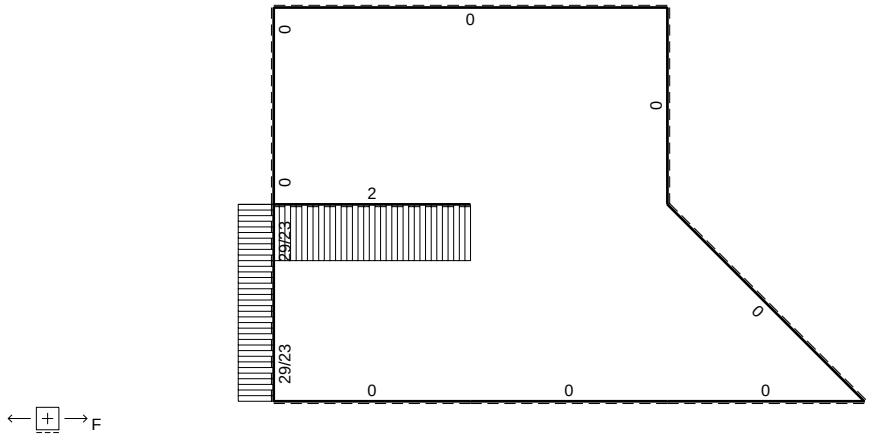
F
0
0
0
0
2
29/23
0
29/23
0
0
0

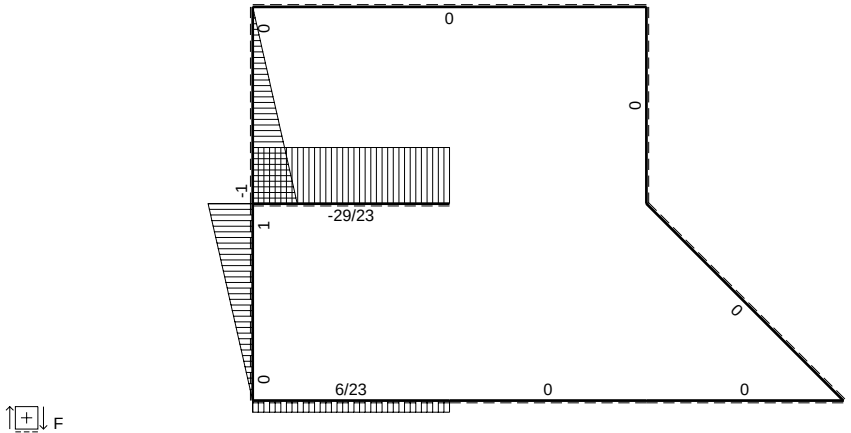
F
0
0
0
0
-1
1
-29/23
0
0
6/23
0
0

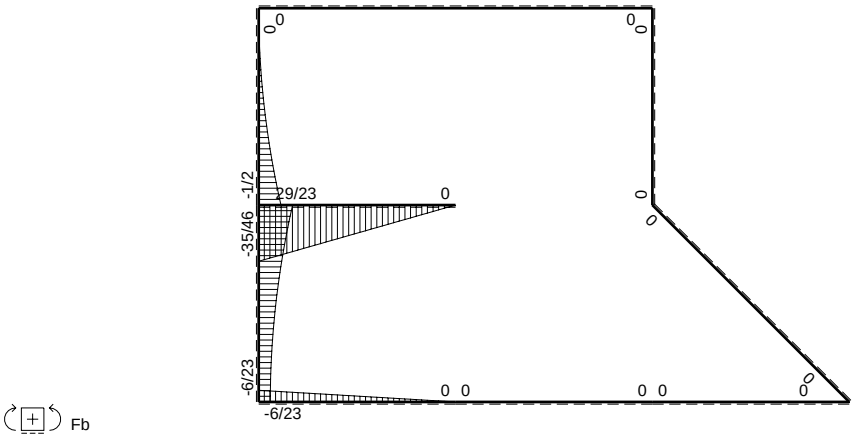
Fb
0
0
0
0
-1/2
29/23
0
-35/46
0
0
-6/23
0 0
0 0
0
-6/23

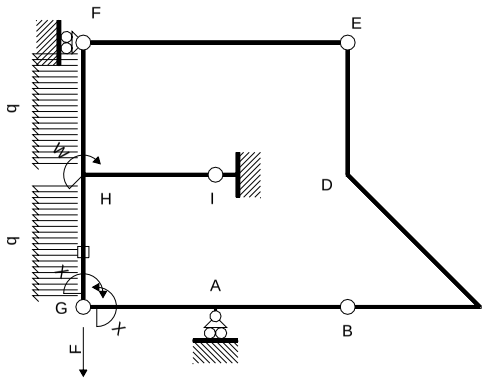

Schema di calcolo iperstatico

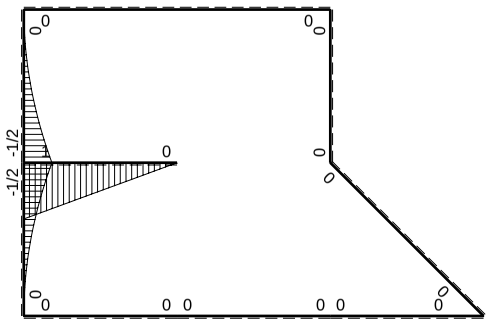

M_0 flessione da carichi assegnati

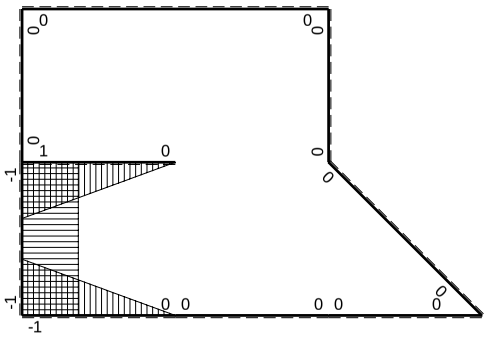

M_x flessione da iperstatica X=1

Quadro contributi PLV per iperstatica $X=W_{GA}$

→	$M_x(x)$	$M_o(x)$	M_xM_o	M_xM_x	$\int M_xM_o/EJdx$	$\int XM_xM_x/EJdx$
AB b	0	0	0	0	0	0
BA b	0	0	0	0		
BC b	0	0	0	0	0	0
CB b	0	0	0	0		
CD $\sqrt{2}$b	0	0	0	0	0	0
DE b	0	0	0	0	0	0
ED b	0	0	0	0		
EF 2b	0	0	0	0	0	0
FE 2b	0	0	0	0		
GA b	-1+x/b	0	0	$1-2x/b+x^2/b^2$	0	1/3Xb/EJ
AG b	x/b	0	0	x^2/b^2		
FH b	0	$-1/2qx^2$	0	0	0	0
HF b	0	$1/2Fb-Fx+1/2qx^2$	0	0		
HI b	1-x/b	Fb-Fx	$Fb-2Fx+Fx^2/b$	$1-2x/b+x^2/b^2$	$1/3Fb^2/EJ$	1/3Xb/EJ
IH b	-x/b	-Fx	Fx^2/b	x^2/b^2		
HG b	-1	$-1/2Fb+Fx-1/2qx^2$	$1/2Fb-Fx+1/2Fx^2/b$	1	$1/6Fb^2/EJ$	Xb/EJ
GH b	1	$1/2qx^2$	$1/2Fx^2/b$	1		
HG	elongazione asta $N_{1HG}\varepsilon_{HG}L_{HG}$				$-Fb^2/EJ$	
A	molla nodo $-V_{1A}(V_{0A}+XV_{1A})/k_A$					1/4Xb/EJ
	totali				$-1/2Fb^2/EJ$	23/12Xb/EJ
	iperstatica $X=W_{GA}$				6/23Fb	

Sviluppi di calcolo iperstatica

$L^{XX}_{GA} = \int_o^b (1 - 2\,x/b + x^2/b^2)\ 1/EJ\ dx = [\,x - x^2/b + 1/3\,x^3/b^2\,]_o^b\ 1/EJ$

$= (\,b - b + 1/3\,b\,)\ 1/EJ = 1/3\ b/EJ$

$L^{XX}_{AG} = \int_o^b (\,x^2/b^2\,)\ 1/EJ\ dx = [1/3\,x^3/b^2\,]_o^b\ 1/EJ$

$= (1/3\,b)\ 1/EJ = 1/3\ b/EJ$

$L^{XX}_{HI} = \int_o^b (1 - 2\,x/b + x^2/b^2)\ 1/EJ\ dx = [\,x - x^2/b + 1/3\,x^3/b^2\,]_o^b\ 1/EJ$

$= (\,b - b + 1/3\,b\,)\ 1/EJ = 1/3\ b/EJ$

$L^{XX}_{IH} = \int_o^b (\,x^2/b^2\,)\ 1/EJ\ dx = [1/3\,x^3/b^2\,]_o^b\ 1/EJ$

$= (1/3\,b)\ 1/EJ = 1/3\ b/EJ$

$L^{XX}_{HG} = \int_o^b (1)\ 1/EJ\ dx = [\,x\,]_o^b\ 1/EJ$

$= (\,b\,)\ 1/EJ = b/EJ$

$L^{XX}_{GH} = \int_o^b (1)\ 1/EJ\ dx = [\,x\,]_o^b\ 1/EJ$

$= (\,b\,)\ 1/EJ = b/EJ$

$L^{Xo}_{HI} = \int_o^b (1 - 2\,x/b + x^2/b^2)\ Fb\ 1/EJ\ dx = [\,x - x^2/b + 1/3\,x^3/b^2\,]_o^b\ Fb\ 1/EJ$

$= (\,b - b + 1/3\,b\,)\ Fb\ 1/EJ = 1/3\ Fb^2/EJ$

$L^{Xo}_{IH} = \int_o^b (\,x^2/b^2\,)\ Fb\ 1/EJ\ dx = [1/3\,x^3/b^2\,]_o^b\ Fb\ 1/EJ$

$= (1/3\,b)\ Fb\ 1/EJ = 1/3\ Fb^2/EJ$

$L^{Xo}_{HG} = \int_o^b (1/2 - x/b + 1/2\,x^2/b^2)\ Fb\ 1/EJ\ dx - 1\ \ (-1)\ \ (-1)\ \ Fb^2/EJ$

$= [1/2\,x - 1/2\,x^2/b + 1/6\,x^3/b^2\,]_o^b\ Fb\ 1/EJ\ -\ 1\ \ (-1)\ \ (-1)\ \ Fb^2/EJ$

$= (1/2\,b - 1/2\,b + 1/6\,b)\ Fb\ 1/EJ\ -\ 1\ \ (-1)\ \ (-1)\ \ Fb^2/EJ = -5/6\ \ Fb^2/EJ$

$L^{Xo}_{GH} = \int_o^b (1/2\,x^2/b^2)\ Fb\ 1/EJ\ dx - 1\ \ (-1)\ \ (-1)\ \ Fb^2/EJ = [1/6\,x^3/b^2\,]_o^b\ Fb\ 1/EJ\ -\ 1\ \ (-1)\ \ (-1)\ \ Fb^2/EJ$

$= (1/6\,b)\ Fb\ 1/EJ\ -\ 1\ \ (-1)\ \ (-1)\ \ Fb^2/EJ = -5/6\ \ Fb^2/EJ$

PROCEDIMENTO E RISULTATI 238641 ESΣ05.xxxx.016

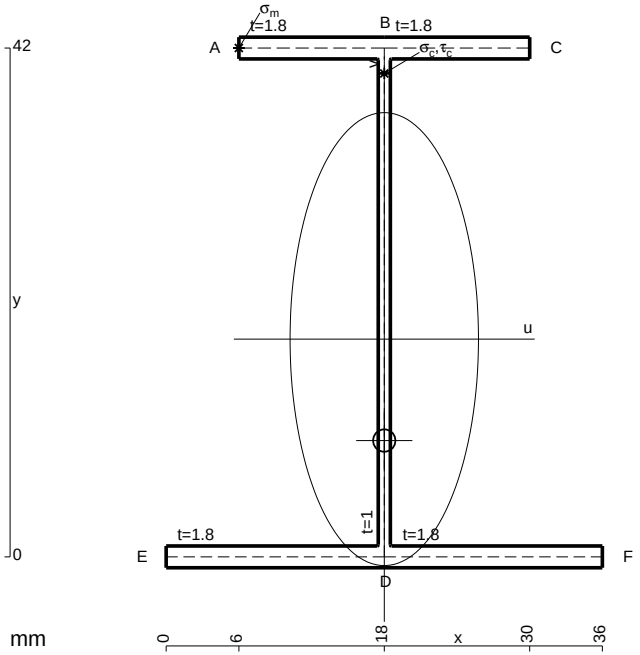

A = 150. mm^2
J_u = 52430. mm^4
J_v = 9072. mm^4
J_t = 130.6 mm^4
y_o = -8.376 mm
y_g = 17.98 mm
T_y = -1600. N
M_x = -456000. Nmm
x_m = 6. mm
y_m = 42. mm
u_m = -12. mm
v_m = 24.02 mm
$\sigma_m = -Mv/J_u$ = 208.9 N/mm^2
x_c = 18. mm
y_c = 42. mm
v_c = 24.02 mm
$\sigma_c = -Mv/J_u$ = 208.9 N/mm^2
$\tau_c = TS^*/tJ_u$ = 31.67 N/mm^2
$\tau_g = TS^*/tJ_u$ = 31.67 N/mm^2
t_c = 1600. mm
$\sigma_o = \sqrt{\sigma^2 + 3\tau^2}$ = 216. N/mm^2

@ Adolfo Zavelani Rossi, Politecnico di Milano, vers.27.03.13 01.12.25

ESΣ05.xxxx.016

@ Adolfo Zavelani Rossi, Politecnico di Milano, vers.27.03.13 01.12.25

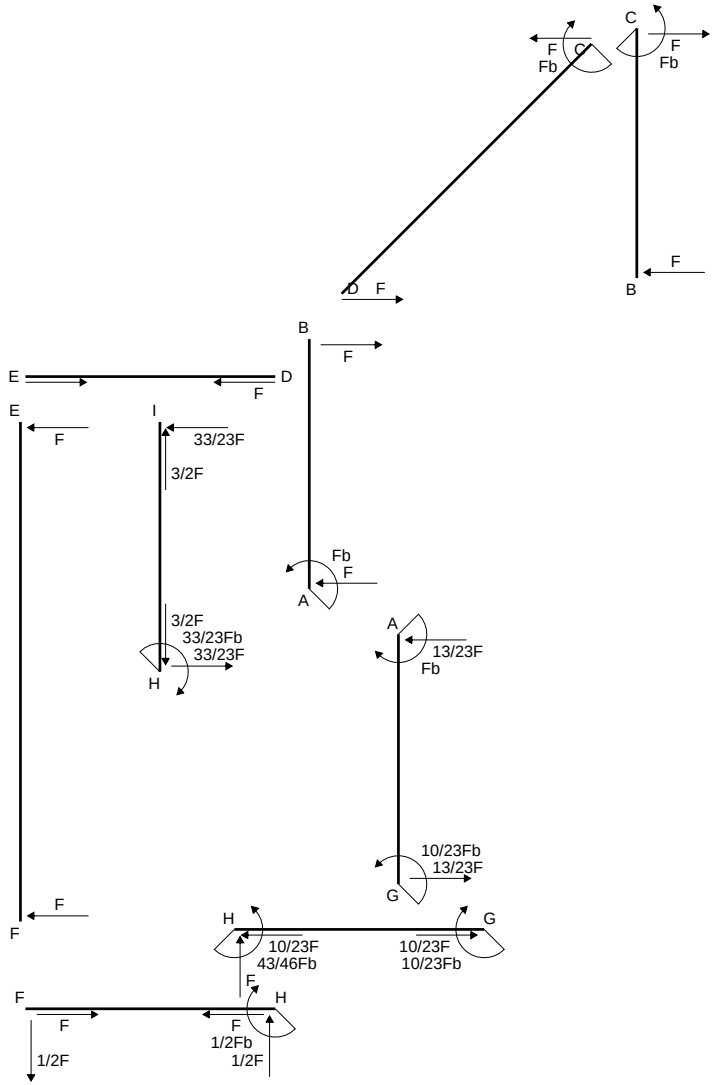
C
F
Fb
C
F
Fb
F
B
D F
B
F
E
D
F
E
F
I
33/23F
3/2F
Fb
F
A
3/2F
33/23Fb
33/23F
H
A
13/23F
Fb
10/23Fb
13/23F
G
F
F
H
G
10/23F
43/46Fb
10/23F
10/23Fb
F
F
H
F
F
1/2Fb
1/2F
1/2F

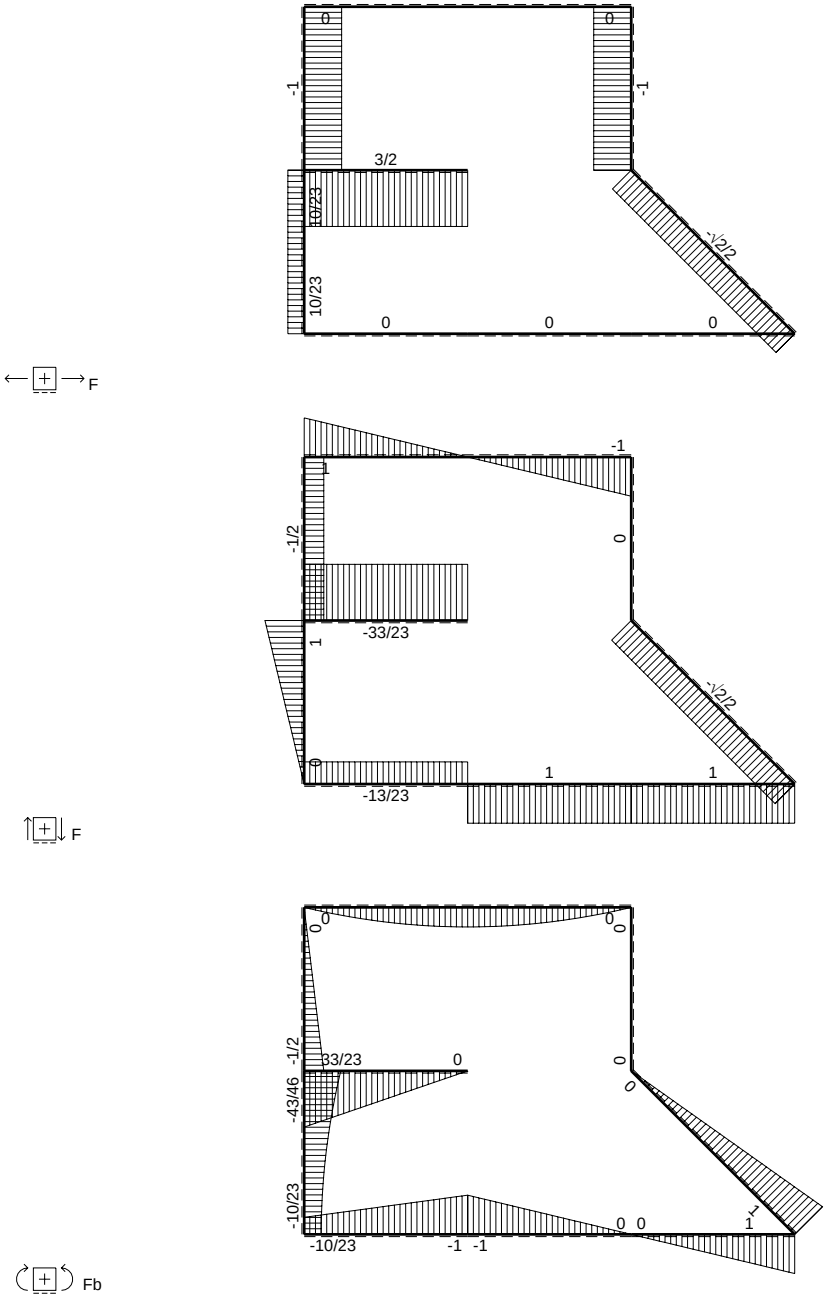
0
0
-1
-1
3/2
10/23
-√2/2
10/23
0
0
0
F
-1
1
-1/2
0
-33/23
1
-√2/2
0
1
1
-13/23
F
0
0
0
0
-1/2
33/23
0
0
0
-43/46
-10/23
0 0
1
-10/23
-1 -1
Fb

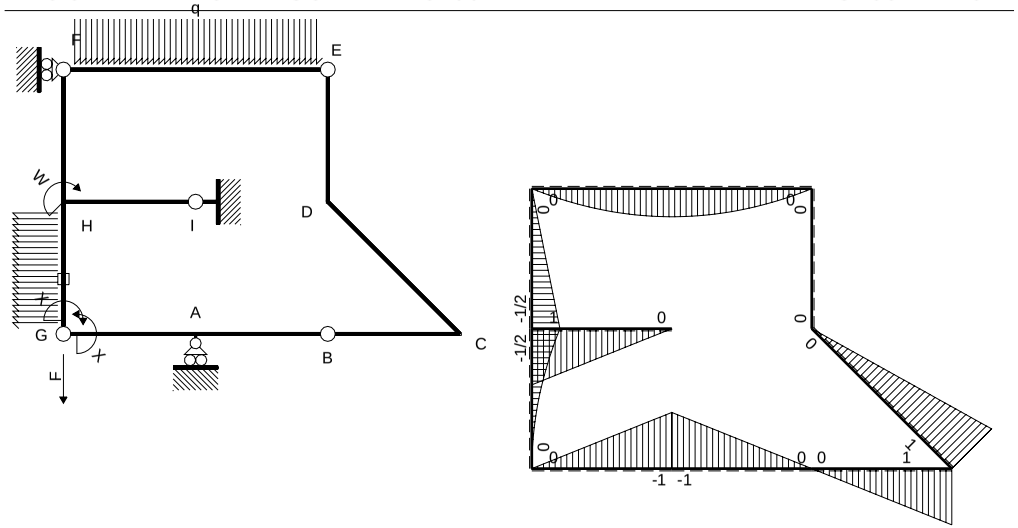

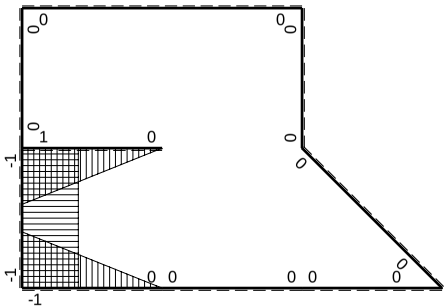

Quadro contributi PLV per iperstatica $X=W_{GA}$

→	$M_x(x)$	$M_o(x)$	M_xM_o	M_xM_x	$\int M_xM_o/EJdx$	$\int XM_xM_x/EJdx$
AB b	0	-Fb+Fx	0	0	0	0
BA b	0	Fx	0	0		
BC b	0	Fx	0	0	0	0
CB b	0	-Fb+Fx	0	0		
CD √2b	0	Fb-√2/2Fx	0	0	0	0
DE b	0	0	0	0	0	0
ED b	0	0	0	0		
EF 2b	0	$-Fx+1/2qx^2$	0	0	0	0
FE 2b	0	$Fx-1/2qx^2$	0	0		
GA b	-1+x/b	-Fx	$Fx-Fx^2/b$	$1-2x/b+x^2/b^2$	$1/6Fb^2/EJ$	1/3Xb/EJ
AG b	x/b	Fb-Fx	$Fx-Fx^2/b$	x^2/b^2		
FH b	0	-1/2Fx	0	0	0	0
HF b	0	1/2Fb-1/2Fx	0	0		
HI b	1-x/b	Fb-Fx	$Fb-2Fx+Fx^2/b$	$1-2x/b+x^2/b^2$	$1/3Fb^2/EJ$	1/3Xb/EJ
IH b	-x/b	-Fx	Fx^2/b	x^2/b^2		
HG b	-1	$-1/2Fb+Fx-1/2qx^2$	$1/2Fb-Fx+1/2Fx^2/b$	1	$1/6Fb^2/EJ$	Xb/EJ
GH b	1	$1/2qx^2$	$1/2Fx^2/b$	1		
HG	elongazione asta $N_{1HG}\varepsilon_{HG}L_{HG}$				$-Fb^2/EJ$	
A	molla nodo $-V_{1A}(V_{0A}+XV_{1A})/k_A$				$-1/2Fb^2/EJ$	1/4Xb/EJ
	totali				$-5/6Fb^2/EJ$	23/12Xb/EJ
	iperstatica $X=W_{GA}$				10/23Fb	

Sviluppi di calcolo iperstatica

$L^{XX}_{GA} = \int_o^b (1 - 2\,x/b + x^2/b^2)\ 1/EJ\ dx = [\,x - x^2/b + 1/3\,x^3/b^2\,]_o^b\ 1/EJ$

$= (\,b - b + 1/3\,b\,)\ 1/EJ = 1/3\ b/EJ$

$L^{XX}_{AG} = \int_o^b (\,x^2/b^2\,)\ 1/EJ\ dx = [1/3\,x^3/b^2\,]_o^b\ 1/EJ$

$= (1/3\,b)\ 1/EJ = 1/3\ b/EJ$

$L^{XX}_{HI} = \int_o^b (1 - 2\,x/b + x^2/b^2)\ 1/EJ\ dx = [\,x - x^2/b + 1/3\,x^3/b^2\,]_o^b\ 1/EJ$

$= (\,b - b + 1/3\,b\,)\ 1/EJ = 1/3\ b/EJ$

$L^{XX}_{IH} = \int_o^b (\,x^2/b^2\,)\ 1/EJ\ dx = [1/3\,x^3/b^2\,]_o^b\ 1/EJ$

$= (1/3\,b)\ 1/EJ = 1/3\ b/EJ$

$L^{XX}_{HG} = \int_o^b (1)\ 1/EJ\ dx = [\,x\,]_o^b\ 1/EJ$

$= (\,b\,)\ 1/EJ = b/EJ$

$L^{XX}_{GH} = \int_o^b (1)\ 1/EJ\ dx = [\,x\,]_o^b\ 1/EJ$

$= (\,b\,)\ 1/EJ = b/EJ$

$L^{Xo}_{GA} = \int_o^b (\,x/b - x^2/b^2\,)\ Fb\ 1/EJ\ dx = [1/2\,x^2/b - 1/3\,x^3/b^2\,]_o^b\ Fb\ 1/EJ$

$= (1/2\,b - 1/3\,b\,)\ Fb\ 1/EJ = 1/6\ Fb^2/EJ$

$L^{Xo}_{AG} = \int_o^b (\,x/b - x^2/b^2\,)\ Fb\ 1/EJ\ dx = [1/2\,x^2/b - 1/3\,x^3/b^2\,]_o^b\ Fb\ 1/EJ$

$= (1/2\,b - 1/3\,b\,)\ Fb\ 1/EJ = 1/6\ Fb^2/EJ$

$L^{Xo}_{HI} = \int_o^b (1 - 2\,x/b + x^2/b^2)\ Fb\ 1/EJ\ dx = [\,x - x^2/b + 1/3\,x^3/b^2\,]_o^b\ Fb\ 1/EJ$

$= (\,b - b + 1/3\,b\,)\ Fb\ 1/EJ = 1/3\ Fb^2/EJ$

$L^{Xo}_{IH} = \int_o^b (\,x^2/b^2\,)\ Fb\ 1/EJ\ dx = [1/3\,x^3/b^2\,]_o^b\ Fb\ 1/EJ$

$= (1/3\,b)\ Fb\ 1/EJ = 1/3\ Fb^2/EJ$

$L^{Xo}_{HG} = \int_o^b (1/2 - x/b + 1/2\,x^2/b^2)\ Fb\ 1/EJ\ dx - 1\ \ (-1)\ \ (-1)\ \ Fb^2/EJ$

$= [1/2\,x - 1/2\,x^2/b + 1/6\,x^3/b^2\,]_o^b\ Fb\ 1/EJ\ -\ 1\ \ (-1)\ \ (-1)\ \ Fb^2/EJ$

$= (1/2\,b - 1/2\,b + 1/6\,b\,)\ Fb\ 1/EJ\ -\ 1\ \ (-1)\ \ (-1)\ \ Fb^2/EJ = -5/6\ \ Fb^2/EJ$

$L^{Xo}_{GH} = \int_o^b (1/2\,x^2/b^2\,)\ Fb\ 1/EJ\ dx - 1\ \ (-1)\ \ (-1)\ \ Fb^2/EJ = [1/6\,x^3/b^2\,]_o^b\ Fb\ 1/EJ\ -\ 1\ \ (-1)\ \ (-1)\ \ Fb^2/EJ$

$= (1/6\,b)\ Fb\ 1/EJ\ -\ 1\ \ (-1)\ \ (-1)\ \ Fb^2/EJ = -5/6\ \ Fb^2/EJ$

PROCEDIMENTO E RISULTATI 237997 ESΣ05.xxxx.017

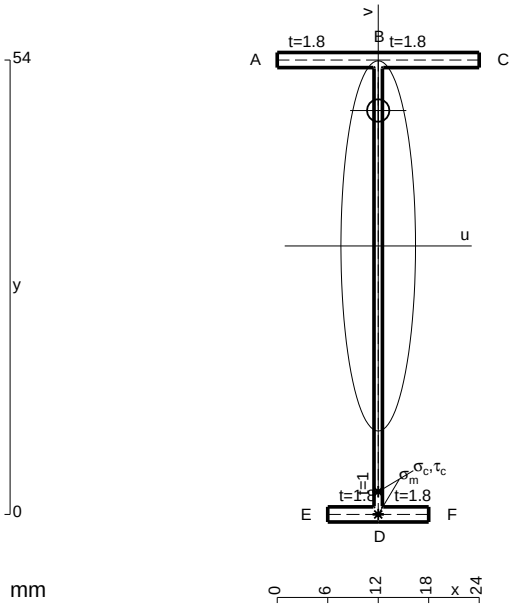

$A = 118.8\ mm^2$

$J_u = 57498.\ mm^4$

$J_v = 2333.\ mm^4$

$J_t = 87.98\ mm^4$

$y_o = 16.09\ mm$

$y_g = 31.91\ mm$

$T_y = 500.\ N$

$M_x = -390000.\ Nmm$

$x_m = 12.\ mm$

$v_m = -31.91\ mm$

$\sigma_m = -Mv/J_u = -216.4\ N/mm^2$

$y_c = 3.\ mm$

$u_c = -12.\ mm$

$v_c = -28.91\ mm$

$\sigma_c = -Mv/J_u = -216.4\ N/mm^2$

$\tau_c = TS^*/tJ_u = 5.994\ N/mm^2$

$\tau_g = TS^*/tJ_u = 5.994\ N/mm^2$

$t_c = 500.\ mm$

$\sigma_o = \sqrt{\sigma^2 + 3\tau^2} = 216.7\ N/mm^2$

@ Adolfo Zavelani Rossi, Politecnico di Milano, vers.27.03.13 01.12.25

ESΣ05.xxxx.017

@ Adolfo Zavelani Rossi, Politecnico di Milano, vers.27.03.13 01.12.25

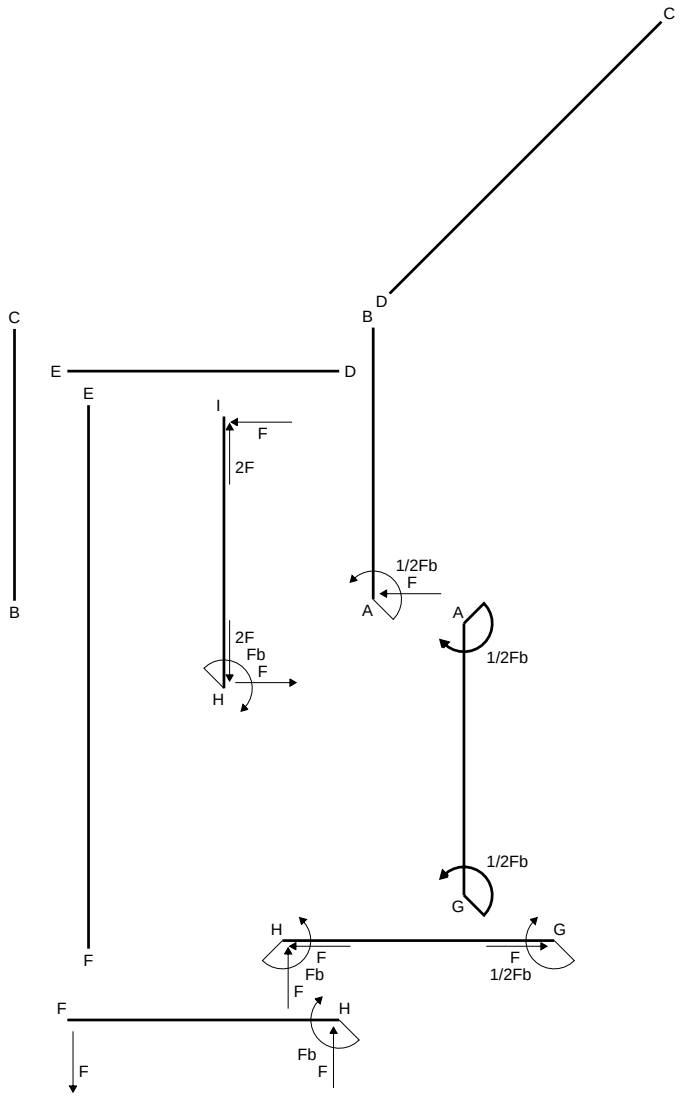
C
B
D
C
B
E
D
E
I
F
2F
1/2Fb
F
A
A
2F
Fb
F
H
1/2Fb
1/2Fb
G
H
G
F
F
Fb
F
1/2Fb
F
H
Fb
F
F

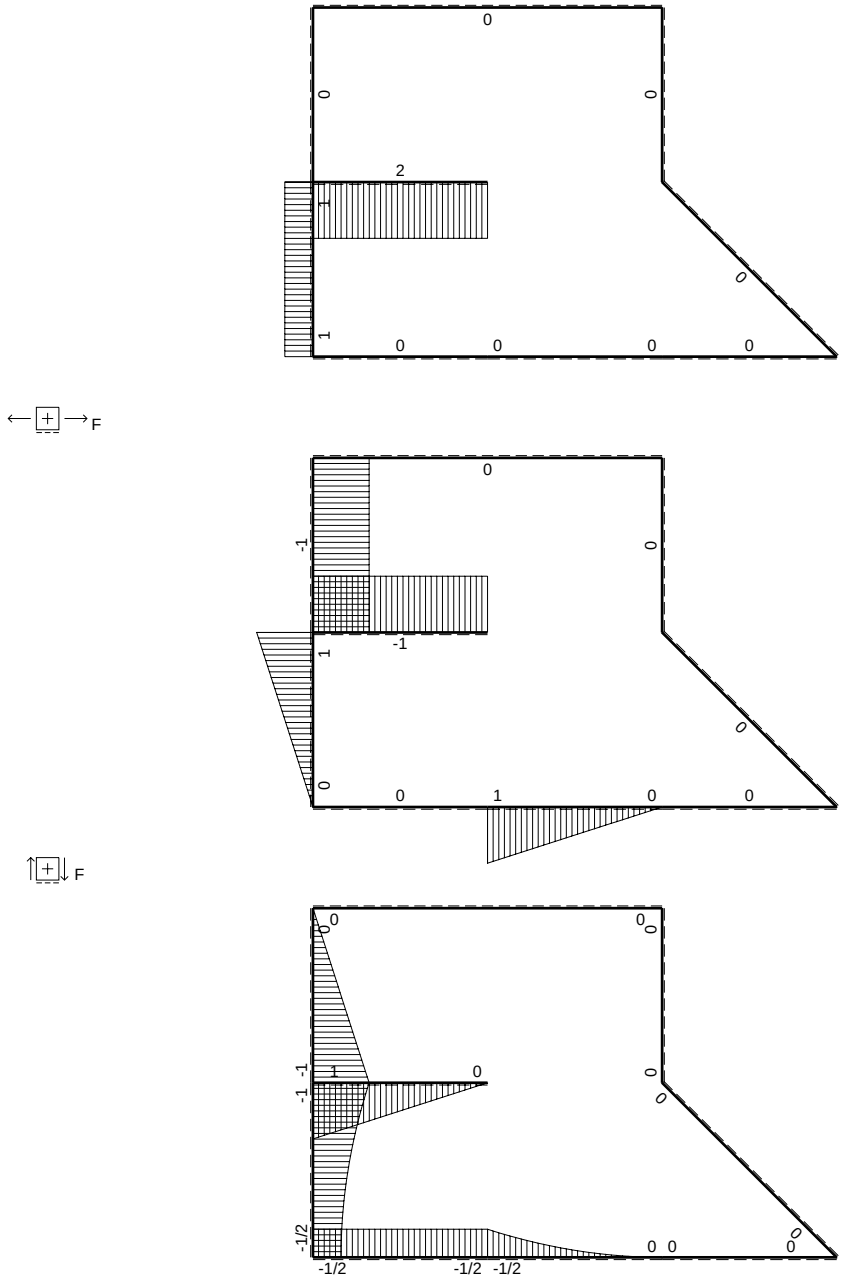
F
F
Fb

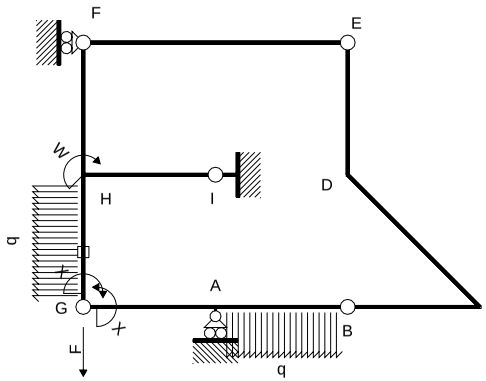

Schema di calcolo iperstatico

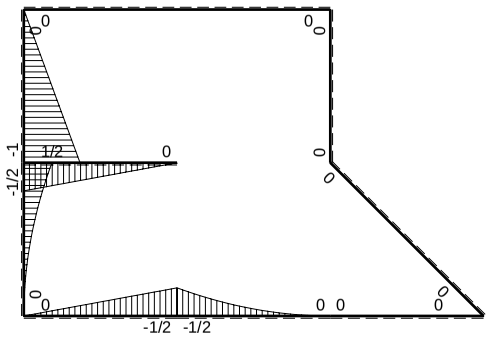

M_0 flessione da carichi assegnati

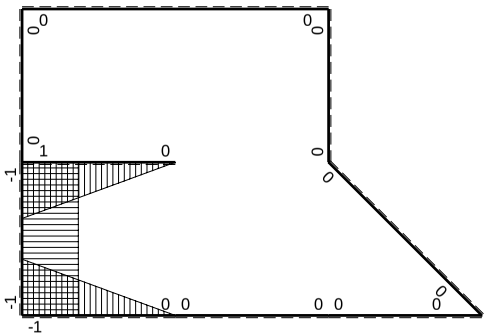

M_x flessione da iperstatica X=1

Quadro contributi PLV per iperstatica $X=W_{GA}$

→	$M_x(x)$	$M_o(x)$	M_xM_o	M_xM_x	$\int M_xM_o/EJdx$	$\int XM_xM_x/EJdx$
AB b	0	$-1/2Fb+Fx-1/2qx^2$	0	0	0	0
BA b	0	$1/2qx^2$	0	0		
BC b	0	0	0	0	0	0
CB b	0	0	0	0		
CD √2b	0	0	0	0	0	0
DE b	0	0	0	0	0	0
ED b	0	0	0	0		
EF 2b	0	0	0	0	0	0
FE 2b	0	0	0	0		
GA b	-1+x/b	-1/2Fx	$1/2Fx-1/2Fx^2/b$	$1-2x/b+x^2/b^2$	$1/12Fb^2/EJ$	$1/3Xb/EJ$
AG b	x/b	$1/2Fb-1/2Fx$	$1/2Fx-1/2Fx^2/b$	x^2/b^2		
FH b	0	-Fx	0	0	0	0
HF b	0	Fb-Fx	0	0		
HI b	1-x/b	$1/2Fb-1/2Fx$	$1/2Fb-Fx+1/2Fx^2/b$	$1-2x/b+x^2/b^2$	$1/6Fb^2/EJ$	$1/3Xb/EJ$
IH b	-x/b	$-1/2Fx$	$1/2Fx^2/b$	x^2/b^2		
HG b	-1	$-1/2Fb+Fx-1/2qx^2$	$1/2Fb-Fx+1/2Fx^2/b$	1	$1/6Fb^2/EJ$	Xb/EJ
GH b	1	$1/2qx^2$	$1/2Fx^2/b$	1		
HG	elongazione asta $N_{1HG}\varepsilon_{HG}L_{HG}$				$-Fb^2/EJ$	
A	molla nodo $-V_{1A}(V_{0A}+XV_{1A})/k_A$				$-3/8Fb^2/EJ$	$1/4Xb/EJ$
	totali				$-23/24Fb^2/EJ$	$23/12Xb/EJ$
	iperstatica $X=W_{GA}$				1/2Fb	

Sviluppi di calcolo iperstatica

$L^{XX}_{GA} = \int_o^b (1 - 2\,x/b + x^2/b^2)\ 1/EJ\ dx = [\,x - x^2/b + 1/3\,x^3/b^2\,]_o^b\ 1/EJ$

$= (\,b - b + 1/3\,b\,)\ 1/EJ = 1/3\ b/EJ$

$L^{XX}_{AG} = \int_o^b (\,x^2/b^2\,)\ 1/EJ\ dx = [1/3\,x^3/b^2\,]_o^b\ 1/EJ$

$= (1/3\,b\,)\ 1/EJ = 1/3\ b/EJ$

$L^{XX}_{HI} = \int_o^b (1 - 2\,x/b + x^2/b^2)\ 1/EJ\ dx = [\,x - x^2/b + 1/3\,x^3/b^2\,]_o^b\ 1/EJ$

$= (\,b - b + 1/3\,b\,)\ 1/EJ = 1/3\ b/EJ$

$L^{XX}_{IH} = \int_o^b (\,x^2/b^2\,)\ 1/EJ\ dx = [1/3\,x^3/b^2\,]_o^b\ 1/EJ$

$= (1/3\,b\,)\ 1/EJ = 1/3\ b/EJ$

$L^{XX}_{HG} = \int_o^b (1)\ 1/EJ\ dx = [\,x\,]_o^b\ 1/EJ$

$= (\,b\,)\ 1/EJ = b/EJ$

$L^{XX}_{GH} = \int_o^b (1)\ 1/EJ\ dx = [\,x\,]_o^b\ 1/EJ$

$= (\,b\,)\ 1/EJ = b/EJ$

$L^{Xo}_{GA} = \int_o^b (1/2\,x/b - 1/2\,x^2/b^2)\ Fb\ 1/EJ\ dx = [1/4\,x^2/b - 1/6\,x^3/b^2\,]_o^b\ Fb\ 1/EJ$

$= (1/4\,b - 1/6\,b\,)\ Fb\ 1/EJ = 1/12\ Fb^2/EJ$

$L^{Xo}_{AG} = \int_o^b (1/2\,x/b - 1/2\,x^2/b^2\,)\ Fb\ 1/EJ\ dx = [1/4\,x^2/b - 1/6\,x^3/b^2\,]_o^b\ Fb\ 1/EJ$

$= (1/4\,b - 1/6\,b\,)\ Fb\ 1/EJ = 1/12\ Fb^2/EJ$

$L^{Xo}_{HI} = \int_o^b (1/2 - x/b + 1/2\,x^2/b^2\,)\ Fb\ 1/EJ\ dx = [1/2\,x - 1/2\,x^2/b + 1/6\,x^3/b^2\,]_o^b\ Fb\ 1/EJ$

$= (1/2\,b - 1/2\,b + 1/6\,b\,)\ Fb\ 1/EJ = 1/6\ Fb^2/EJ$

$L^{Xo}_{IH} = \int_o^b (1/2\,x^2/b^2\,)\ Fb\ 1/EJ\ dx = [1/6\,x^3/b^2\,]_o^b\ Fb\ 1/EJ$

$= (1/6\,b\,)\ Fb\ 1/EJ = 1/6\ Fb^2/EJ$

$L^{Xo}_{HG} = \int_o^b (1/2 - x/b + 1/2\,x^2/b^2\,)\ Fb\ 1/EJ\ dx - 1\ \ (-1)\ \ (-1)\ \ Fb^2/EJ$

$= [1/2\,x - 1/2\,x^2/b + 1/6\,x^3/b^2\,]_o^b\ Fb\ 1/EJ\ -\ 1\ \ (-1)\ \ (-1)\ \ Fb^2/EJ$

$= (1/2\,b - 1/2\,b + 1/6\,b\,)\ Fb\ 1/EJ\ -\ 1\ \ (-1)\ \ (-1)\ \ Fb^2/EJ = -5/6\ \ Fb^2/EJ$

$L^{Xo}_{GH} = \int_o^b (1/2\,x^2/b^2\,)\ Fb\ 1/EJ\ dx - 1\ \ (-1)\ \ (-1)\ \ Fb^2/EJ = [1/6\,x^3/b^2\,]_o^b\ Fb\ 1/EJ\ -\ 1\ \ (-1)\ \ (-1)\ \ Fb^2/EJ$

$= (1/6\,b\,)\ Fb\ 1/EJ\ -\ 1\ \ (-1)\ \ (-1)\ \ Fb^2/EJ = -5/6\ \ Fb^2/EJ$

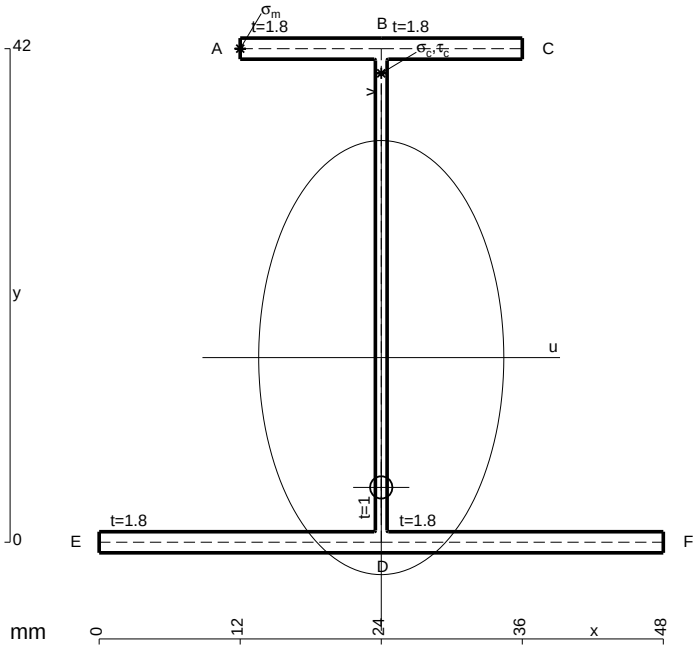

A = 171.6 mm^2
J_u = 58532. mm^4
J_v = 18662. mm^4
J_t = 154. mm^4
y_o = -11.05 mm
y_g = 15.71 mm
T_y = -800. N
M_x = -512000. Nmm
x_m = 12. mm
y_m = 42. mm
u_m = -12. mm
v_m = 26.29 mm
$\sigma_m = -Mv/J_u$ = 229.9 N/mm^2
x_c = 24. mm
y_c = 42. mm
v_c = 26.29 mm
$\sigma_c = -Mv/J_u$ = 229.9 N/mm^2
$\tau_c = TS^*/tJ_u$ = 15.52 N/mm^2
$\tau_g = TS^*/tJ_u$ = 15.52 N/mm^2
t_c = 800. mm
$\sigma_o = \sqrt{\sigma^2 + 3\tau^2}$ = 231.5 N/mm^2

ESΣ05.xxxx.018

@ Adolfo Zavelani Rossi, Politecnico di Milano, vers.27.03.13 01.12.25

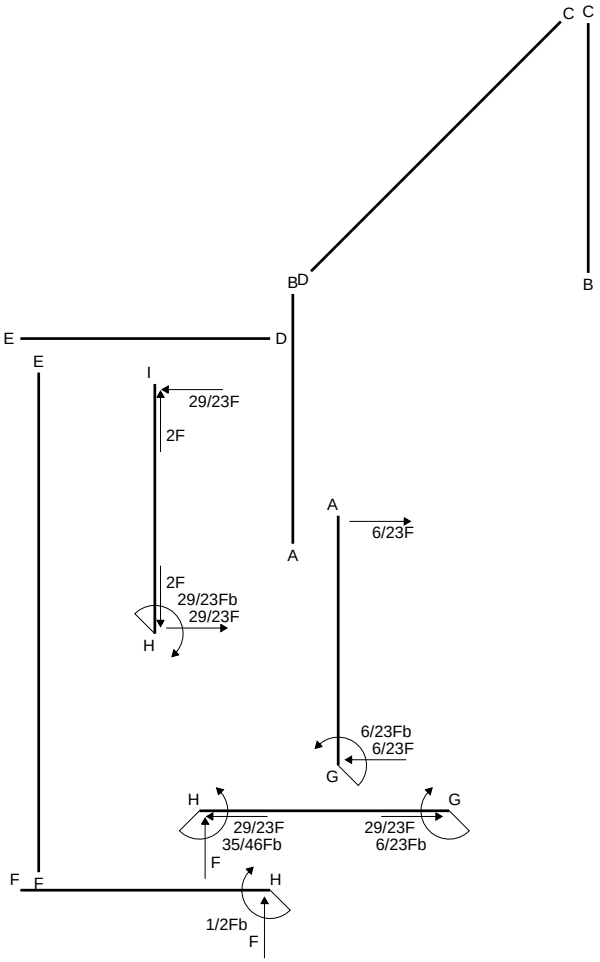
C C
B D
B
E D
E
I
29/23F
2F
A
6/23F
A
2F
29/23Fb
29/23F
H
6/23Fb
6/23F
G
H
G
29/23F
35/46Fb
29/23F
6/23Fb
F
F F
H
1/2Fb
F

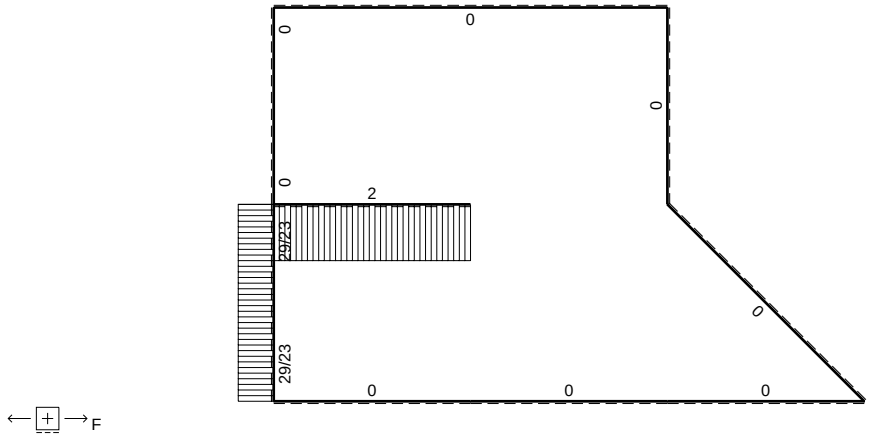
F
0
0
0
0
2
29/23
29/23
0
0
0
0

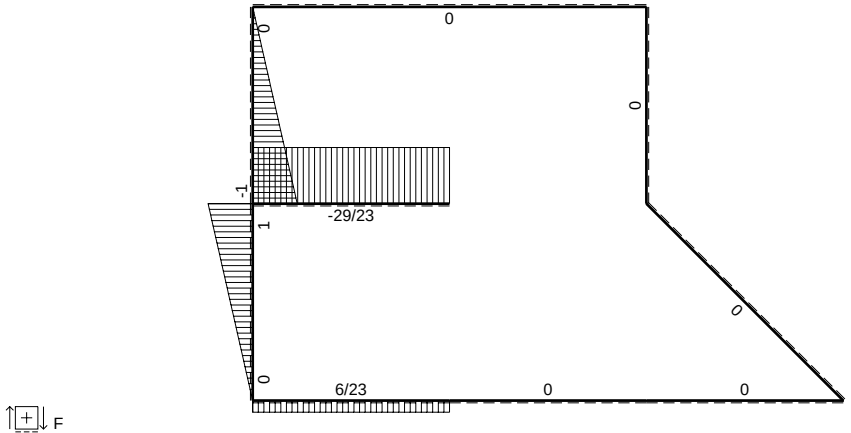
F
0
0
0
0
-1
1
-29/23
0
0
6/23
0
0

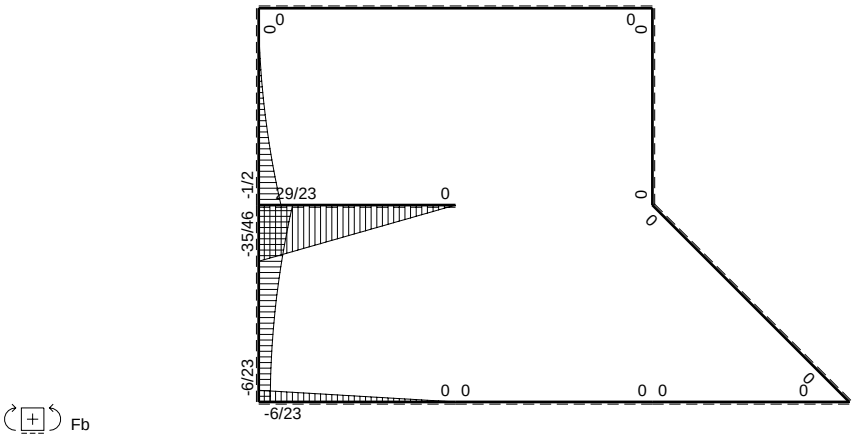
Fb
0
0
0
0
-1/2
29/23
0
-35/46
0
0
-6/23
0 0
0 0
0
-6/23

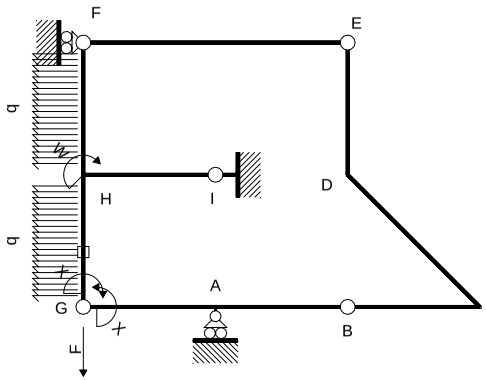

Schema di calcolo iperstatico

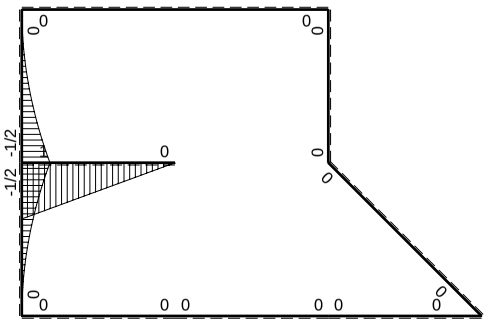

M_0 flessione da carichi assegnati

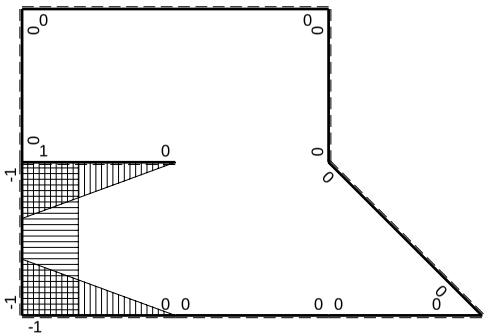

M_x flessione da iperstatica X=1

Quadro contributi PLV per iperstatica $X=W_{GA}$

→	$M_x(x)$	$M_o(x)$	M_xM_o	M_xM_x	$\int M_xM_o/EJdx$	$\int XM_xM_x/EJdx$
AB b	0	0	0	0	0	0
BA b	0	0	0	0		
BC b	0	0	0	0	0	0
CB b	0	0	0	0		
CD $\sqrt{2}$b	0	0	0	0	0	0
DE b	0	0	0	0	0	0
ED b	0	0	0	0		
EF 2b	0	0	0	0	0	0
FE 2b	0	0	0	0		
GA b	-1+x/b	0	0	$1-2x/b+x^2/b^2$	0	1/3Xb/EJ
AG b	x/b	0	0	x^2/b^2		
FH b	0	$-1/2qx^2$	0	0	0	0
HF b	0	$1/2Fb-Fx+1/2qx^2$	0	0		
HI b	1-x/b	Fb-Fx	$Fb-2Fx+Fx^2/b$	$1-2x/b+x^2/b^2$	$1/3Fb^2/EJ$	1/3Xb/EJ
IH b	-x/b	-Fx	Fx^2/b	x^2/b^2		
HG b	-1	$-1/2Fb+Fx-1/2qx^2$	$1/2Fb-Fx+1/2Fx^2/b$	1	$1/6Fb^2/EJ$	Xb/EJ
GH b	1	$1/2qx^2$	$1/2Fx^2/b$	1		
HG	elongazione asta $N_{1HG}\varepsilon_{HG}L_{HG}$				$-Fb^2/EJ$	
A	molla nodo $-V_{1A}(V_{0A}+XV_{1A})/k_A$					1/4Xb/EJ
	totali				$-1/2Fb^2/EJ$	23/12Xb/EJ
	iperstatica $X=W_{GA}$				6/23Fb	

Sviluppi di calcolo iperstatica

$L^{XX}_{GA} = \int_o^b (1 - 2\,x/b + x^2/b^2)\ 1/EJ\ dx = [\ x - x^2/b + 1/3\ x^3/b^2\ ]_o^b\ 1/EJ$

$= (\ b - b + 1/3\ b\ )\ 1/EJ\ = 1/3\ b/EJ$

$L^{XX}_{AG} = \int_o^b (\ x^2/b^2\ )\ 1/EJ\ dx = [1/3\ x^3/b^2\ ]_o^b\ 1/EJ$

$= (1/3\ b\ )\ 1/EJ\ = 1/3\ b/EJ$

$L^{XX}_{HI} = \int_o^b (1 - 2\,x/b + x^2/b^2)\ 1/EJ\ dx = [\ x - x^2/b + 1/3\ x^3/b^2\ ]_o^b\ 1/EJ$

$= (\ b - b + 1/3\ b\ )\ 1/EJ\ = 1/3\ b/EJ$

$L^{XX}_{IH} = \int_o^b (\ x^2/b^2\ )\ 1/EJ\ dx = [1/3\ x^3/b^2\ ]_o^b\ 1/EJ$

$= (1/3\ b\ )\ 1/EJ\ = 1/3\ b/EJ$

$L^{XX}_{HG} = \int_o^b (1\ )\ 1/EJ\ dx = [\ x\ ]_o^b\ 1/EJ$

$= (\ b\ )\ 1/EJ\ =\ b/EJ$

$L^{XX}_{GH} = \int_o^b (1\ )\ 1/EJ\ dx = [\ x\ ]_o^b\ 1/EJ$

$= (\ b\ )\ 1/EJ\ =\ b/EJ$

$L^{Xo}_{HI} = \int_o^b (1 - 2\,x/b + x^2/b^2)\ Fb\ 1/EJ\ dx = [\ x - x^2/b + 1/3\ x^3/b^2\ ]_o^b\ Fb\ 1/EJ$

$= (\ b - b + 1/3\ b\ )\ Fb\ 1/EJ\ = 1/3\ Fb^2/EJ$

$L^{Xo}_{IH} = \int_o^b (\ x^2/b^2\ )\ Fb\ 1/EJ\ dx = [1/3\ x^3/b^2\ ]_o^b\ Fb\ 1/EJ$

$= (1/3\ b\ )\ Fb\ 1/EJ\ = 1/3\ Fb^2/EJ$

$L^{Xo}_{HG} = \int_o^b (1/2 - x/b + 1/2\ x^2/b^2\ )\ Fb\ 1/EJ\ dx - 1\ \ (-1)\ \ (-1)\ \ Fb^2/EJ$

$= [1/2\ x - 1/2\ x^2/b + 1/6\ x^3/b^2\ ]_o^b\ Fb\ 1/EJ\ -\ 1\ \ (-1)\ \ (-1)\ \ Fb^2/EJ$

$= (1/2\ b - 1/2\ b + 1/6\ b\ )\ Fb\ 1/EJ\ -\ 1\ \ (-1)\ \ (-1)\ \ Fb^2/EJ = -5/6\ \ Fb^2/EJ$

$L^{Xo}_{GH} = \int_o^b (1/2\ x^2/b^2\ )\ Fb\ 1/EJ\ dx - 1\ \ (-1)\ \ (-1)\ \ Fb^2/EJ = [1/6\ x^3/b^2\ ]_o^b\ Fb\ 1/EJ\ -\ 1\ \ (-1)\ \ (-1)\ \ Fb^2/EJ$

$= (1/6\ b\ )\ Fb\ 1/EJ\ -\ 1\ \ (-1)\ \ (-1)\ \ Fb^2/EJ = -5/6\ \ Fb^2/EJ$

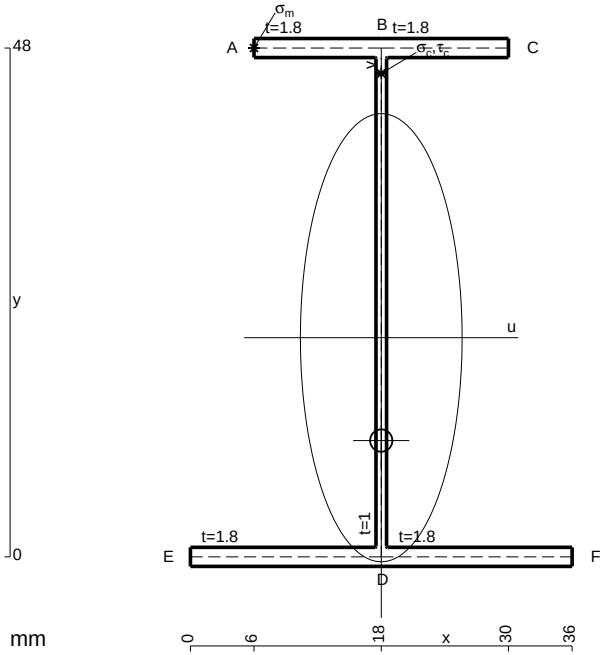

A = 156. mm^2
J_u = 69701. mm^4
J_v = 9072. mm^4
J_t = 132.6 mm^4
y_o = -9.705 mm
y_g = 20.68 mm
T_y = -1590. N
M_x = -612150. Nmm
x_m = 6. mm
y_m = 48. mm
u_m = -12. mm
v_m = 27.32 mm
$\sigma_m = -Mv/J_u$ = 240. N/mm^2
x_c = 18. mm
y_c = 48. mm
v_c = 27.32 mm
$\sigma_c = -Mv/J_u$ = 240. N/mm^2
$\tau_c = TS^*/tJ_u$ = 26.93 N/mm^2
$\tau_g = TS^*/tJ_u$ = 26.93 N/mm^2
t_c = 1590. mm
$\sigma_o = \sqrt{\sigma^2 + 3\tau^2}$ = 244.5 N/mm^2

ESΣ05.xxxx.019

@ Adolfo Zavelani Rossi, Politecnico di Milano, vers.27.03.13 01.12.25

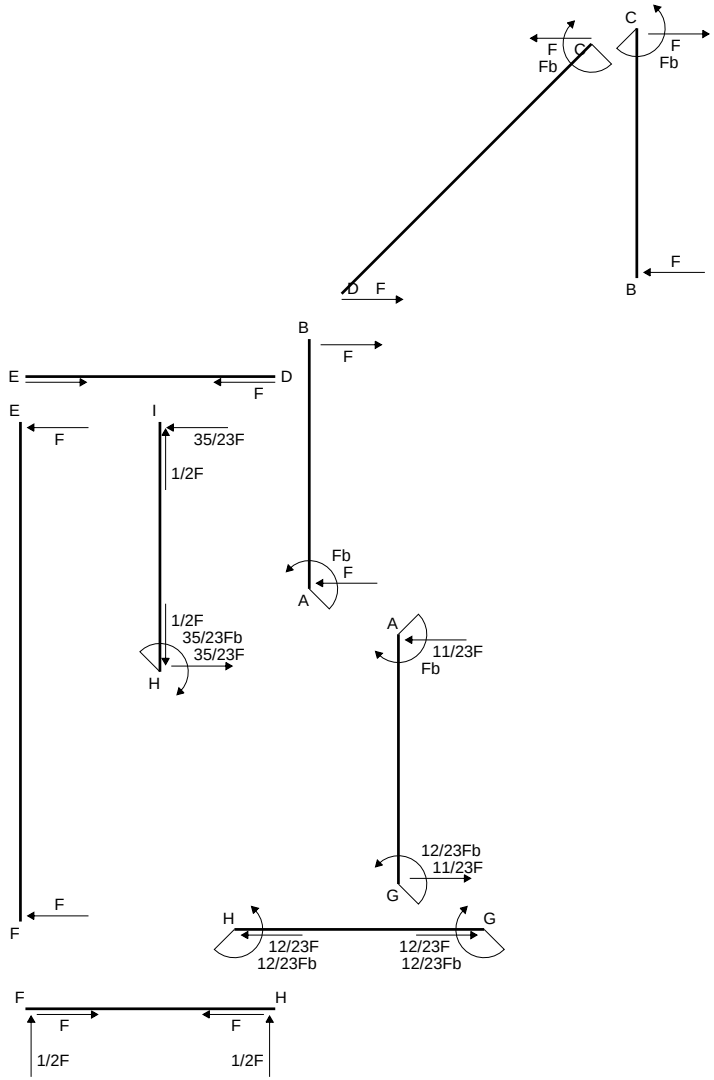
C
F
Fb
C
F
Fb
F
D
F
B
B
F
E
D
F
E
F
I
35/23F
1/2F
Fb
F
A
1/2F
35/23Fb
35/23F
H
A
11/23F
Fb
12/23Fb
11/23F
G
F
F
H
G
12/23F
12/23Fb
12/23F
12/23Fb
F
H
F
F
1/2F
1/2F

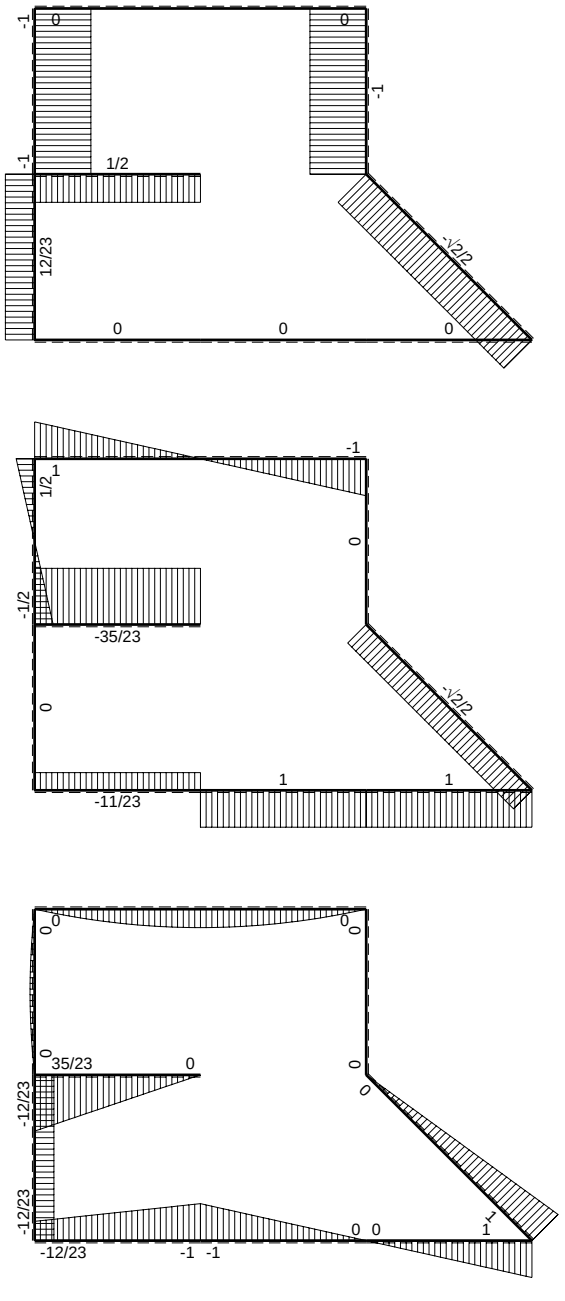
-1
0
0
-1
-1
1/2
12/23
-√2/2
0
0
0
F
-1
1/2
1
0
-1/2
-35/23
-√2/2
0
1
1
-11/23
F
0
0
0
0
35/23
0
-12/23
0
0
-12/23
0 0
1
1
-12/23
-1 -1
Fb

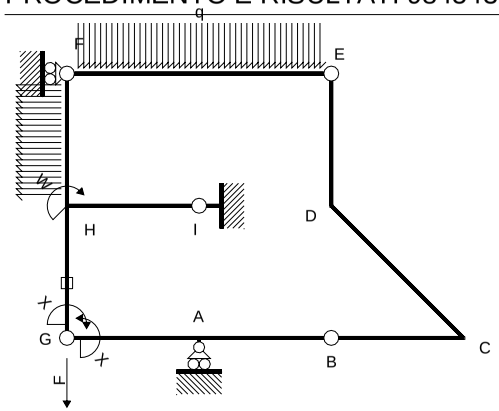

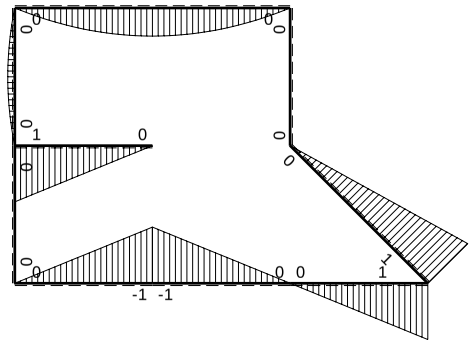

M_0 flessione da carichi assegnati

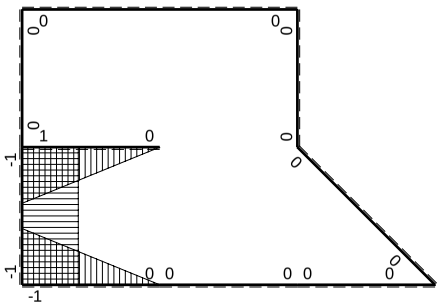

M_x flessione da iperstatica X=1

Quadro contributi PLV per iperstatica $X=W_{GA}$

→	$M_x(x)$	$M_0(x)$	M_xM_0	M_xM_x	$\int M_xM_0/EJdx$	$\int XM_xM_x/EJdx$
AB b	0	-Fb+Fx	0	0	0	0
BA b	0	Fx	0	0		
BC b	0	Fx	0	0	0	0
CB b	0	-Fb+Fx	0	0		
CD √2b	0	Fb-√2/2Fx	0	0	0	0
DE b	0	0	0	0	0	0
ED b	0	0	0	0		
EF 2b	0	$-Fx+1/2qx^2$	0	0	0	0
FE 2b	0	$Fx-1/2qx^2$	0	0		
GA b	$-1+x/b$	-Fx	$Fx-Fx^2/b$	$1-2x/b+x^2/b^2$	$1/6Fb^2/EJ$	1/3Xb/EJ
AG b	x/b	Fb-Fx	$Fx-Fx^2/b$	x^2/b^2		
FH b	0	$1/2Fx-1/2qx^2$	0	0	0	0
HF b	0	$-1/2Fx+1/2qx^2$	0	0		
HI b	1-x/b	Fb-Fx	$Fb-2Fx+Fx^2/b$	$1-2x/b+x^2/b^2$	$1/3Fb^2/EJ$	1/3Xb/EJ
IH b	-x/b	-Fx	Fx^2/b	x^2/b^2		
HG b	-1	0	0	1	0	Xb/EJ
GH b	1	0	0	1		
HG	elongazione asta $N_{1HG}\varepsilon_{HG}L_{HG}$				$-Fb^2/EJ$	
A	molla nodo $-V_{1A}(V_{0A}+XV_{1A})/k_A$				$-1/2Fb^2/EJ$	1/4Xb/EJ
	totali				$-Fb^2/EJ$	23/12Xb/EJ
	iperstatica $X=W_{GA}$				12/23Fb	

Sviluppi di calcolo iperstatica

$L^{XX}_{GA} = \int_o^b (1 - 2\,x/b + x^2/b^2)\ 1/EJ\ dx = [\,x - x^2/b + 1/3\,x^3/b^2\,]_o^b\ 1/EJ$

$= (\,b - b + 1/3\,b\,)\ 1/EJ = 1/3\ b/EJ$

$L^{XX}_{AG} = \int_o^b (\,x^2/b^2\,)\ 1/EJ\ dx = [1/3\,x^3/b^2\,]_o^b\ 1/EJ$

$= (1/3\,b)\ 1/EJ = 1/3\ b/EJ$

$L^{XX}_{HI} = \int_o^b (1 - 2\,x/b + x^2/b^2)\ 1/EJ\ dx = [\,x - x^2/b + 1/3\,x^3/b^2\,]_o^b\ 1/EJ$

$= (\,b - b + 1/3\,b\,)\ 1/EJ = 1/3\ b/EJ$

$L^{XX}_{IH} = \int_o^b (\,x^2/b^2\,)\ 1/EJ\ dx = [1/3\,x^3/b^2\,]_o^b\ 1/EJ$

$= (1/3\,b)\ 1/EJ = 1/3\ b/EJ$

$L^{XX}_{HG} = \int_o^b (1)\ 1/EJ\ dx = [\,x\,]_o^b\ 1/EJ$

$= (\,b\,)\ 1/EJ = b/EJ$

$L^{XX}_{GH} = \int_o^b (1)\ 1/EJ\ dx = [\,x\,]_o^b\ 1/EJ$

$= (\,b\,)\ 1/EJ = b/EJ$

$L^{Xo}_{GA} = \int_o^b (\,x/b - x^2/b^2\,)\ Fb\ 1/EJ\ dx = [1/2\,x^2/b - 1/3\,x^3/b^2\,]_o^b\ Fb\ 1/EJ$

$= (1/2\,b - 1/3\,b\,)\ Fb\ 1/EJ = 1/6\ Fb^2/EJ$

$L^{Xo}_{AG} = \int_o^b (\,x/b - x^2/b^2\,)\ Fb\ 1/EJ\ dx = [1/2\,x^2/b - 1/3\,x^3/b^2\,]_o^b\ Fb\ 1/EJ$

$= (1/2\,b - 1/3\,b\,)\ Fb\ 1/EJ = 1/6\ Fb^2/EJ$

$L^{Xo}_{HI} = \int_o^b (1 - 2\,x/b + x^2/b^2)\ Fb\ 1/EJ\ dx = [\,x - x^2/b + 1/3\,x^3/b^2\,]_o^b\ Fb\ 1/EJ$

$= (\,b - b + 1/3\,b\,)\ Fb\ 1/EJ = 1/3\ Fb^2/EJ$

$L^{Xo}_{IH} = \int_o^b (\,x^2/b^2\,)\ Fb\ 1/EJ\ dx = [1/3\,x^3/b^2\,]_o^b\ Fb\ 1/EJ$

$= (1/3\,b)\ Fb\ 1/EJ = 1/3\ Fb^2/EJ$

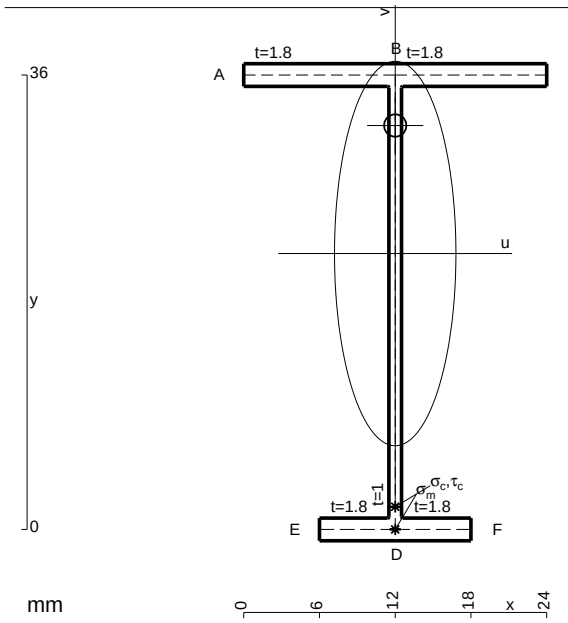

A = 100.8 mm^2
J_u = 23384. mm^4
J_v = 2333. mm^4
J_t = 81.98 mm^4
y_o = 10.14 mm
y_g = 21.86 mm
T_y = 690. N
M_x = -213900. Nmm
x_m = 12. mm
v_m = -21.86 mm
$\sigma_m = -Mv/J_u$ = -199.9 N/mm^2
y_c = 3. mm
u_c = -12. mm
v_c = -18.86 mm
$\sigma_c = -Mv/J_u$ = -199.9 N/mm^2
$\tau_c = TS^*/tJ_u$ = 13.93 N/mm^2
$\tau_g = TS^*/tJ_u$ = 13.93 N/mm^2
t_c = 690. mm
$\sigma_o = \sqrt{\sigma^2 + 3\tau^2}$ = 201.4 N/mm^2

ESΣ05.xxxx.020

@ Adolfo Zavelani Rossi, Politecnico di Milano, vers.27.03.13 01.12.25

C
D
C
B
E
D

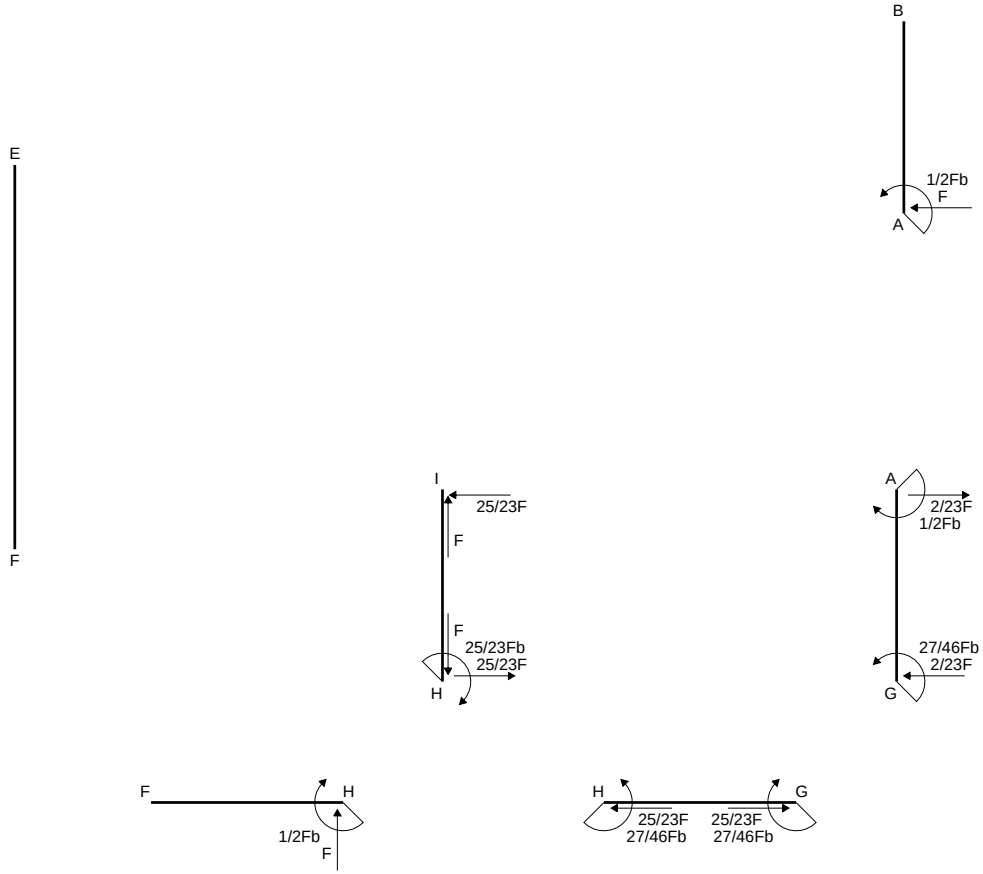
E
F
B
1/2Fb
F
A
I
25/23F
F
F
25/23Fb
25/23F
H
A
2/23F
1/2Fb
27/46Fb
2/23F
G
F
H
1/2Fb
F
H
G
25/23F
27/46Fb
25/23F
27/46Fb

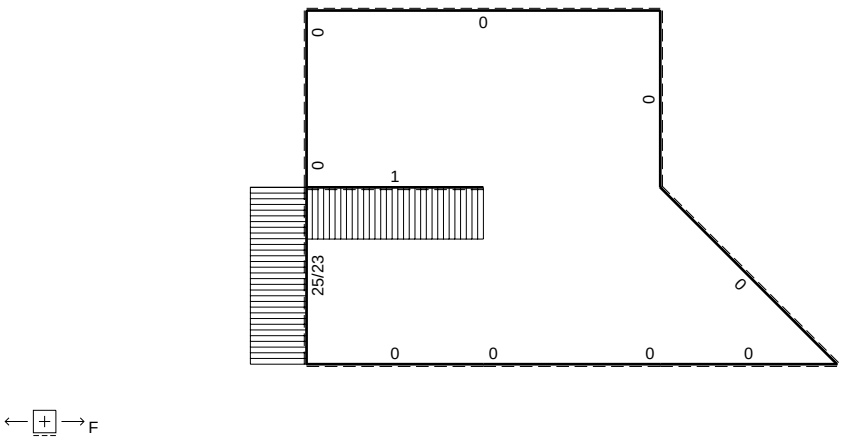
0
0
0
0
1
25/23
0
0
0
0
0
F

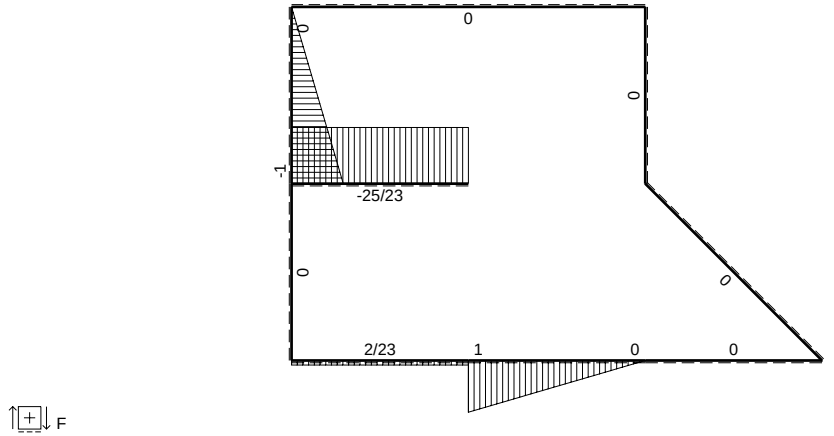
0
0
0
-1
-25/23
0
0
2/23
1
0
0
F

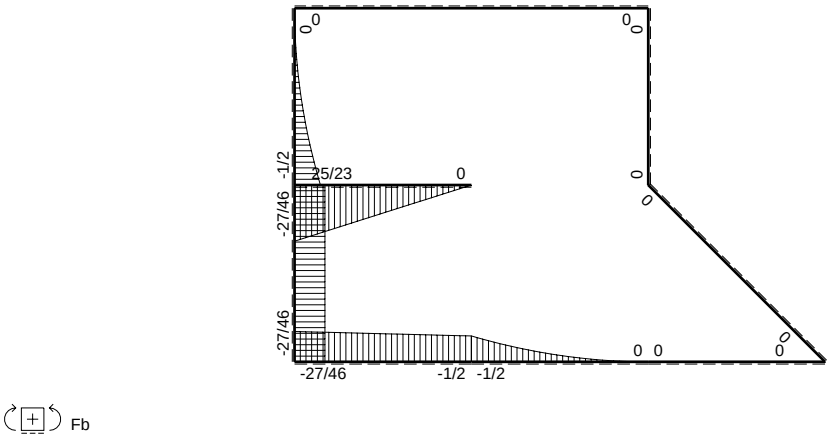
0
0
0
0
-1/2
25/23
0
0
0
-27/46
-27/46
0 0
0
-27/46
-1/2
-1/2
Fb

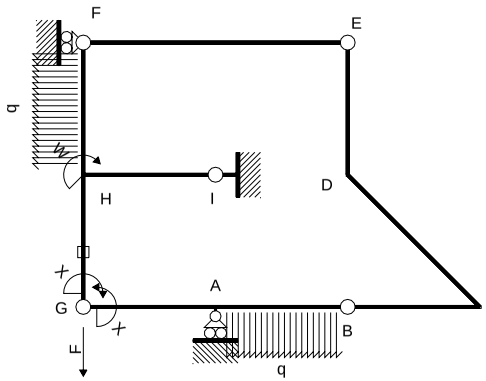

Schema di calcolo iperstatico

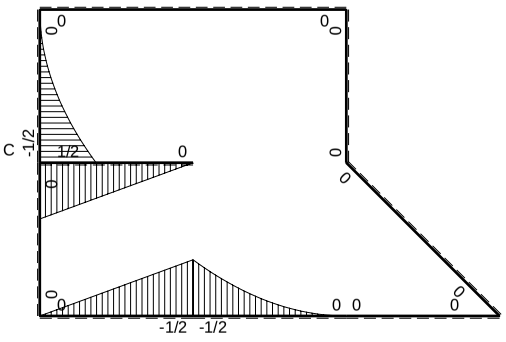

M_0 flessione da carichi assegnati

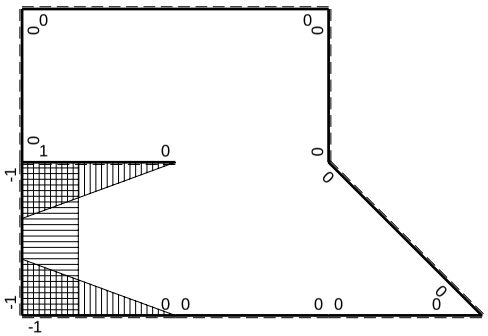

M_x flessione da iperstatica X=1

Quadro contributi PLV per iperstatica $X=W_{GA}$

→	$M_x(x)$	$M_o(x)$	M_xM_o	M_xM_x	$\int M_xM_o/EJdx$	$\int XM_xM_x/EJdx$
AB b	0	$-1/2Fb+Fx-1/2qx^2$	0	0	0	0
BA b	0	$1/2qx^2$	0	0		
BC b	0	0	0	0	0	0
CB b	0	0	0	0		
CD √2b	0	0	0	0	0	0
DE b	0	0	0	0	0	0
ED b	0	0	0	0		
EF 2b	0	0	0	0	0	0
FE 2b	0	0	0	0		
GA b	-1+x/b	-1/2Fx	$1/2Fx-1/2Fx^2/b$	$1-2x/b+x^2/b^2$	$1/12Fb^2/EJ$	$1/3Xb/EJ$
AG b	x/b	1/2Fb-1/2Fx	$1/2Fx-1/2Fx^2/b$	x^2/b^2		
FH b	0	$-1/2qx^2$	0	0	0	0
HF b	0	$1/2Fb-Fx+1/2qx^2$	0	0		
HI b	1-x/b	1/2Fb-1/2Fx	$1/2Fb-Fx+1/2Fx^2/b$	$1-2x/b+x^2/b^2$	$1/6Fb^2/EJ$	$1/3Xb/EJ$
IH b	-x/b	-1/2Fx	$1/2Fx^2/b$	x^2/b^2		
HG b	-1	0	0	1	0	Xb/EJ
GH b	1	0	0	1		
HG	elongazione asta $N_{1HG}\varepsilon_{HG}L_{HG}$				$-Fb^2/EJ$	
A	molla nodo $-V_{1A}(V_{0A}+XV_{1A})/k_A$				$-3/8Fb^2/EJ$	$1/4Xb/EJ$
	totali				$-9/8Fb^2/EJ$	$23/12Xb/EJ$
	iperstatica $X=W_{GA}$				27/46Fb	

Sviluppi di calcolo iperstatica

$L^{XX}_{GA} = \int_o^b (1 - 2\,x/b + x^2/b^2)\ 1/EJ\ dx = [\,x - x^2/b + 1/3\,x^3/b^2\,]_o^b\ 1/EJ$

$= (\,b - b + 1/3\,b\,)\ 1/EJ = 1/3\ b/EJ$

$L^{XX}_{AG} = \int_o^b (\,x^2/b^2\,)\ 1/EJ\ dx = [1/3\,x^3/b^2\,]_o^b\ 1/EJ$

$= (1/3\,b\,)\ 1/EJ = 1/3\ b/EJ$

$L^{XX}_{HI} = \int_o^b (1 - 2\,x/b + x^2/b^2)\ 1/EJ\ dx = [\,x - x^2/b + 1/3\,x^3/b^2\,]_o^b\ 1/EJ$

$= (\,b - b + 1/3\,b\,)\ 1/EJ = 1/3\ b/EJ$

$L^{XX}_{IH} = \int_o^b (\,x^2/b^2\,)\ 1/EJ\ dx = [1/3\,x^3/b^2\,]_o^b\ 1/EJ$

$= (1/3\,b\,)\ 1/EJ = 1/3\ b/EJ$

$L^{XX}_{HG} = \int_o^b (1)\ 1/EJ\ dx = [\,x\,]_o^b\ 1/EJ$

$= (\,b\,)\ 1/EJ = b/EJ$

$L^{XX}_{GH} = \int_o^b (1)\ 1/EJ\ dx = [\,x\,]_o^b\ 1/EJ$

$= (\,b\,)\ 1/EJ = b/EJ$

$L^{Xo}_{GA} = \int_o^b (1/2\,x/b - 1/2\,x^2/b^2)\ Fb\ 1/EJ\ dx = [1/4\,x^2/b - 1/6\,x^3/b^2\,]_o^b\ Fb\ 1/EJ$

$= (1/4\,b - 1/6\,b\,)\ Fb\ 1/EJ = 1/12\ Fb^2/EJ$

$L^{Xo}_{AG} = \int_o^b (1/2\,x/b - 1/2\,x^2/b^2)\ Fb\ 1/EJ\ dx = [1/4\,x^2/b - 1/6\,x^3/b^2\,]_o^b\ Fb\ 1/EJ$

$= (1/4\,b - 1/6\,b\,)\ Fb\ 1/EJ = 1/12\ Fb^2/EJ$

$L^{Xo}_{HI} = \int_o^b (1/2 - x/b + 1/2\,x^2/b^2)\ Fb\ 1/EJ\ dx = [1/2\,x - 1/2\,x^2/b + 1/6\,x^3/b^2\,]_o^b\ Fb\ 1/EJ$

$= (1/2\,b - 1/2\,b + 1/6\,b\,)\ Fb\ 1/EJ = 1/6\ Fb^2/EJ$

$L^{Xo}_{IH} = \int_o^b (1/2\,x^2/b^2\,)\ Fb\ 1/EJ\ dx = [1/6\,x^3/b^2\,]_o^b\ Fb\ 1/EJ$

$= (1/6\,b\,)\ Fb\ 1/EJ = 1/6\ Fb^2/EJ$

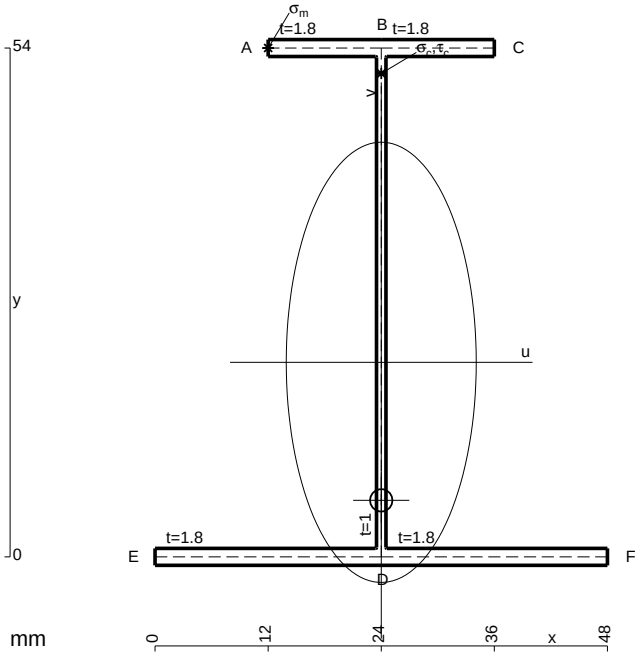

A = 183.6 mm^2
J_u = 100190. mm^4
J_v = 18662. mm^4
J_t = 158. mm^4
y_o = -14.65 mm
y_g = 20.65 mm
T_y = 2520. N
M_x = -630000. Nmm
x_m = 12. mm
y_m = 54. mm
u_m = -12. mm
v_m = 33.35 mm
$\sigma_m = -Mv/J_u$ = 209.7 N/mm^2
x_c = 24. mm
y_c = 54. mm
v_c = 33.35 mm
$\sigma_c = -Mv/J_u$ = 209.7 N/mm^2
$\tau_c = TS^*/tJ_u$ = 36.24 N/mm^2
$\tau_g = TS^*/tJ_u$ = 36.24 N/mm^2
t_c = 2520. mm
$\sigma_o = \sqrt{\sigma^2 + 3\tau^2}$ = 218.9 N/mm^2

ESΣ05.xxxx.021

@ Adolfo Zavelani Rossi, Politecnico di Milano, vers.27.03.13 01.12.25

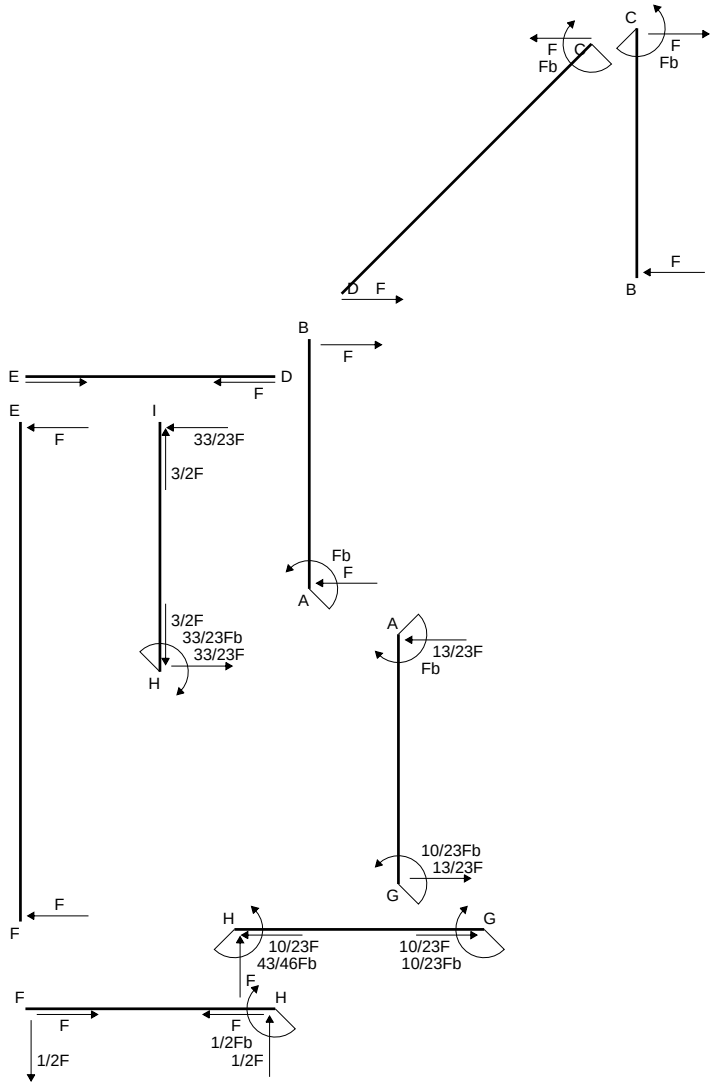
C
F
Fb
C
F
Fb
D
F
B
F
B
F
E
D
F
E
F
I
33/23F
3/2F
Fb
F
A
3/2F
33/23Fb
33/23F
H
A
13/23F
Fb
10/23Fb
13/23F
G
F
F
H
G
10/23F
43/46Fb
10/23F
10/23Fb
F
F
H
F
F
1/2Fb
1/2F
1/2F

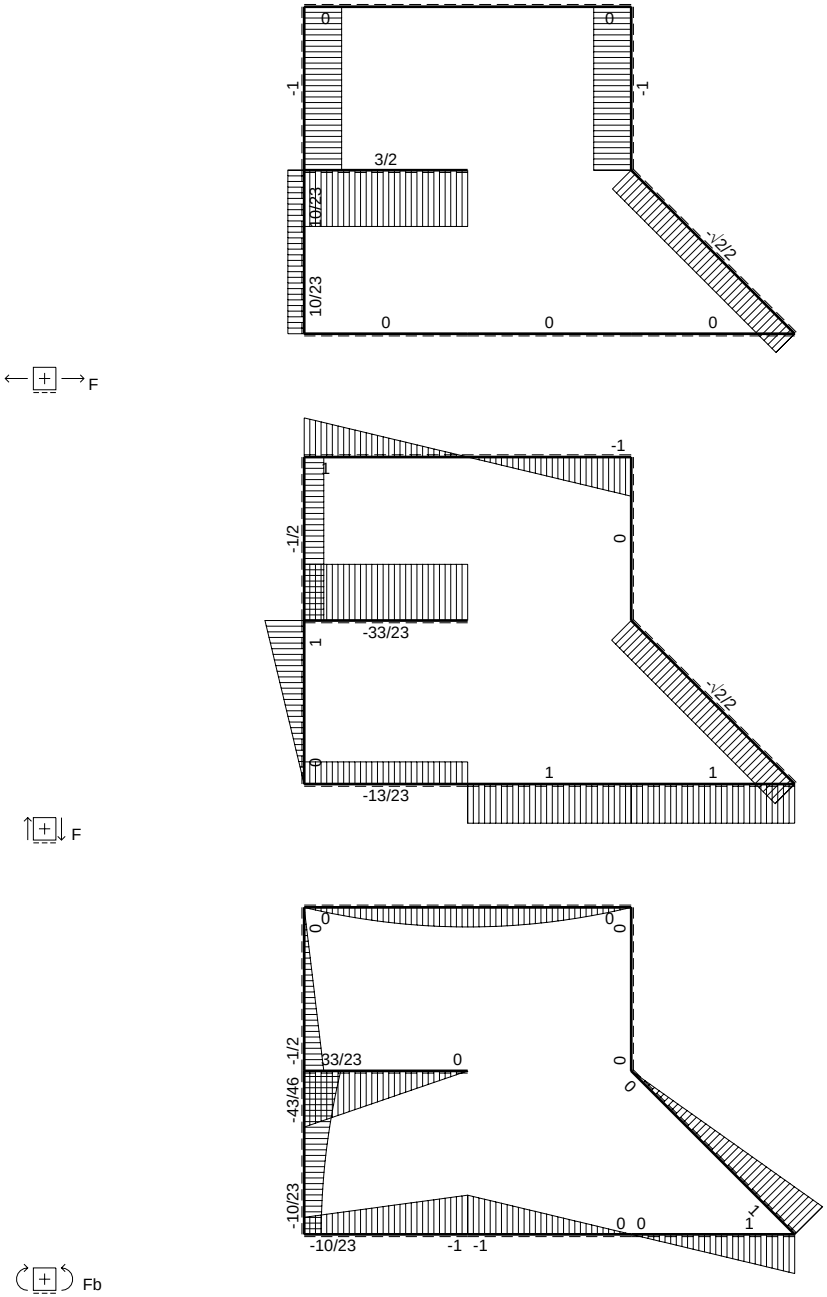
F
0
0
-1
-1
3/2
10/23
-√2/2
10/23
0
0
0
F
-1
1
-1/2
0
-33/23
1
-√2/2
0
1
1
-13/23
Fb
0
0
0
0
-1/2
33/23
0
0
0
-43/46
-10/23
0 0
1
-10/23
-1 -1

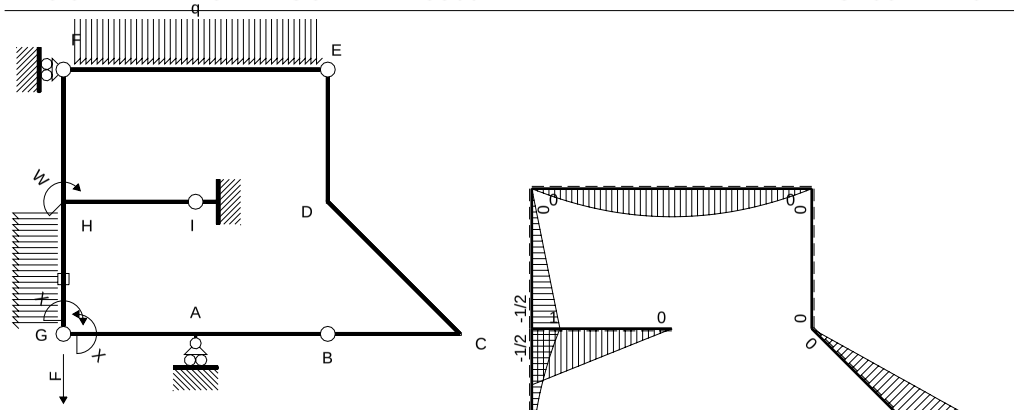

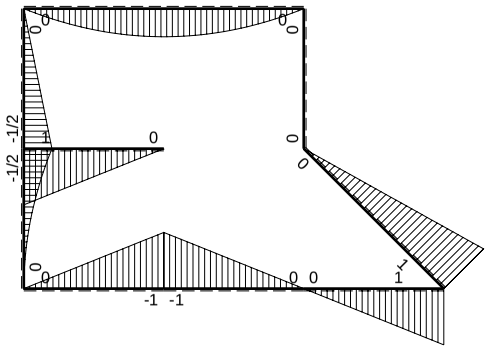

M_0 flessione da carichi assegnati

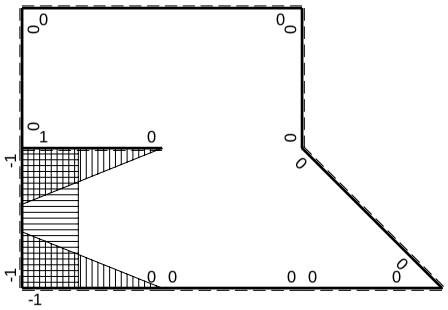

M_x flessione da iperstatica X=1

Quadro contributi PLV per iperstatica $X=W_{GA}$

→	$M_x(x)$	$M_0(x)$	M_xM_0	M_xM_x	$\int M_xM_0/EJdx$	$\int XM_xM_x/EJdx$
AB b	0	-Fb+Fx	0	0	0	0
BA b	0	Fx	0	0		
BC b	0	Fx	0	0	0	0
CB b	0	-Fb+Fx	0	0		
CD √2b	0	Fb-√2/2Fx	0	0	0	0
DE b	0	0	0	0	0	0
ED b	0	0	0	0		
EF 2b	0	$-Fx+1/2qx^2$	0	0	0	0
FE 2b	0	$Fx-1/2qx^2$	0	0		
GA b	-1+x/b	-Fx	$Fx-Fx^2/b$	$1-2x/b+x^2/b^2$	$1/6Fb^2/EJ$	1/3Xb/EJ
AG b	x/b	Fb-Fx	$Fx-Fx^2/b$	x^2/b^2		
FH b	0	-1/2Fx	0	0	0	0
HF b	0	1/2Fb-1/2Fx	0	0		
HI b	1-x/b	Fb-Fx	$Fb-2Fx+Fx^2/b$	$1-2x/b+x^2/b^2$	$1/3Fb^2/EJ$	1/3Xb/EJ
IH b	-x/b	-Fx	Fx^2/b	x^2/b^2		
HG b	-1	$-1/2Fb+Fx-1/2qx^2$	$1/2Fb-Fx+1/2Fx^2/b$	1	$1/6Fb^2/EJ$	Xb/EJ
GH b	1	$1/2qx^2$	$1/2Fx^2/b$	1		
HG	elongazione asta $N_{1HG}\varepsilon_{HG}L_{HG}$				$-Fb^2/EJ$	
A	molla nodo $-V_{1A}(V_{0A}+XV_{1A})/k_A$				$-1/2Fb^2/EJ$	1/4Xb/EJ
	totali				$-5/6Fb^2/EJ$	23/12Xb/EJ
	iperstatica $X=W_{GA}$				10/23Fb	

Sviluppi di calcolo iperstatica

$L^{XX}_{GA} = \int_o^b (1 - 2\,x/b + x^2/b^2)\ 1/EJ\ dx = [\,x - x^2/b + 1/3\,x^3/b^2\,]_o^b\ 1/EJ$

$= (\,b - b + 1/3\,b\,)\ 1/EJ = 1/3\ b/EJ$

$L^{XX}_{AG} = \int_o^b (\,x^2/b^2\,)\ 1/EJ\ dx = [1/3\,x^3/b^2\,]_o^b\ 1/EJ$

$= (1/3\,b)\ 1/EJ = 1/3\ b/EJ$

$L^{XX}_{HI} = \int_o^b (1 - 2\,x/b + x^2/b^2)\ 1/EJ\ dx = [\,x - x^2/b + 1/3\,x^3/b^2\,]_o^b\ 1/EJ$

$= (\,b - b + 1/3\,b\,)\ 1/EJ = 1/3\ b/EJ$

$L^{XX}_{IH} = \int_o^b (\,x^2/b^2\,)\ 1/EJ\ dx = [1/3\,x^3/b^2\,]_o^b\ 1/EJ$

$= (1/3\,b)\ 1/EJ = 1/3\ b/EJ$

$L^{XX}_{HG} = \int_o^b (1)\ 1/EJ\ dx = [\,x\,]_o^b\ 1/EJ$

$= (\,b\,)\ 1/EJ = b/EJ$

$L^{XX}_{GH} = \int_o^b (1)\ 1/EJ\ dx = [\,x\,]_o^b\ 1/EJ$

$= (\,b\,)\ 1/EJ = b/EJ$

$L^{Xo}_{GA} = \int_o^b (\,x/b - x^2/b^2\,)\ Fb\ 1/EJ\ dx = [1/2\,x^2/b - 1/3\,x^3/b^2\,]_o^b\ Fb\ 1/EJ$

$= (1/2\,b - 1/3\,b\,)\ Fb\ 1/EJ = 1/6\ Fb^2/EJ$

$L^{Xo}_{AG} = \int_o^b (\,x/b - x^2/b^2\,)\ Fb\ 1/EJ\ dx = [1/2\,x^2/b - 1/3\,x^3/b^2\,]_o^b\ Fb\ 1/EJ$

$= (1/2\,b - 1/3\,b\,)\ Fb\ 1/EJ = 1/6\ Fb^2/EJ$

$L^{Xo}_{HI} = \int_o^b (1 - 2\,x/b + x^2/b^2)\ Fb\ 1/EJ\ dx = [\,x - x^2/b + 1/3\,x^3/b^2\,]_o^b\ Fb\ 1/EJ$

$= (\,b - b + 1/3\,b\,)\ Fb\ 1/EJ = 1/3\ Fb^2/EJ$

$L^{Xo}_{IH} = \int_o^b (\,x^2/b^2\,)\ Fb\ 1/EJ\ dx = [1/3\,x^3/b^2\,]_o^b\ Fb\ 1/EJ$

$= (1/3\,b)\ Fb\ 1/EJ = 1/3\ Fb^2/EJ$

$L^{Xo}_{HG} = \int_o^b (1/2 - x/b + 1/2\,x^2/b^2)\ Fb\ 1/EJ\ dx - 1\ \ (-1)\ \ (-1)\ \ Fb^2/EJ$

$= [1/2\,x - 1/2\,x^2/b + 1/6\,x^3/b^2\,]_o^b\ Fb\ 1/EJ\ -\ 1\ \ (-1)\ \ (-1)\ \ Fb^2/EJ$

$= (1/2\,b - 1/2\,b + 1/6\,b\,)\ Fb\ 1/EJ\ -\ 1\ \ (-1)\ \ (-1)\ \ Fb^2/EJ = -5/6\ \ Fb^2/EJ$

$L^{Xo}_{GH} = \int_o^b (1/2\,x^2/b^2\,)\ Fb\ 1/EJ\ dx - 1\ \ (-1)\ \ (-1)\ \ Fb^2/EJ = [1/6\,x^3/b^2\,]_o^b\ Fb\ 1/EJ\ -\ 1\ \ (-1)\ \ (-1)\ \ Fb^2/EJ$

$= (1/6\,b)\ Fb\ 1/EJ\ -\ 1\ \ (-1)\ \ (-1)\ \ Fb^2/EJ = -5/6\ \ Fb^2/EJ$

PROCEDIMENTO E RISULTATI 238694 ESΣ05.xxxx.022

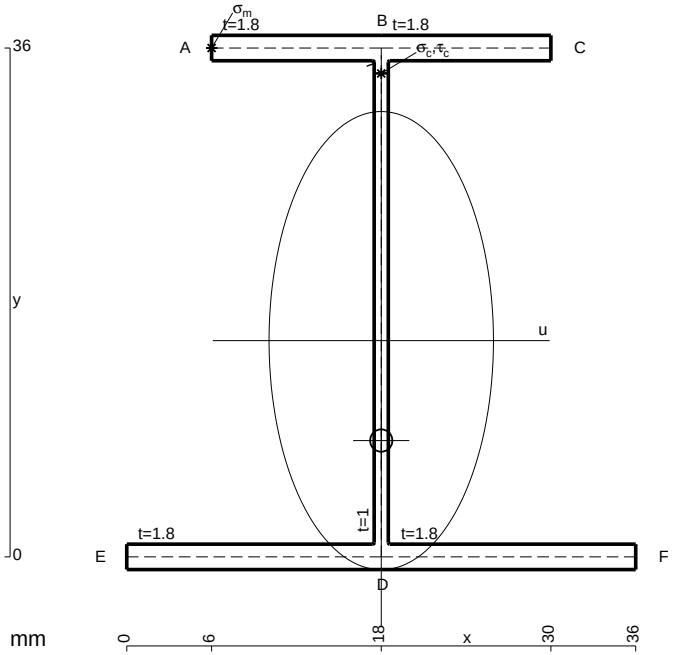

A = 144. mm^2
J_u = 37830. mm^4
J_v = 9072. mm^4
J_t = 128.6 mm^4
y_o = -7.071 mm
y_g = 15.3 mm
T_y = 1080. N
M_x = -399600. Nmm
x_m = 6. mm
y_m = 36. mm
u_m = -12. mm
v_m = 20.7 mm
$\sigma_m = -Mv/J_u$ = 218.7 N/mm^2
x_c = 18. mm
y_c = 36. mm
v_c = 20.7 mm
$\sigma_c = -Mv/J_u$ = 218.7 N/mm^2
$\tau_c = TS^*/tJ_u$ = 25.53 N/mm^2
$\tau_g = TS^*/tJ_u$ = 25.53 N/mm^2
t_c = 1080. mm
$\sigma_o = \sqrt{\sigma^2 + 3\tau^2}$ = 223.1 N/mm^2

@ Adolfo Zavelani Rossi, Politecnico di Milano, vers.27.03.13 01.12.25

ESΣ05.xxxx.022

@ Adolfo Zavelani Rossi, Politecnico di Milano, vers.27.03.13 01.12.25

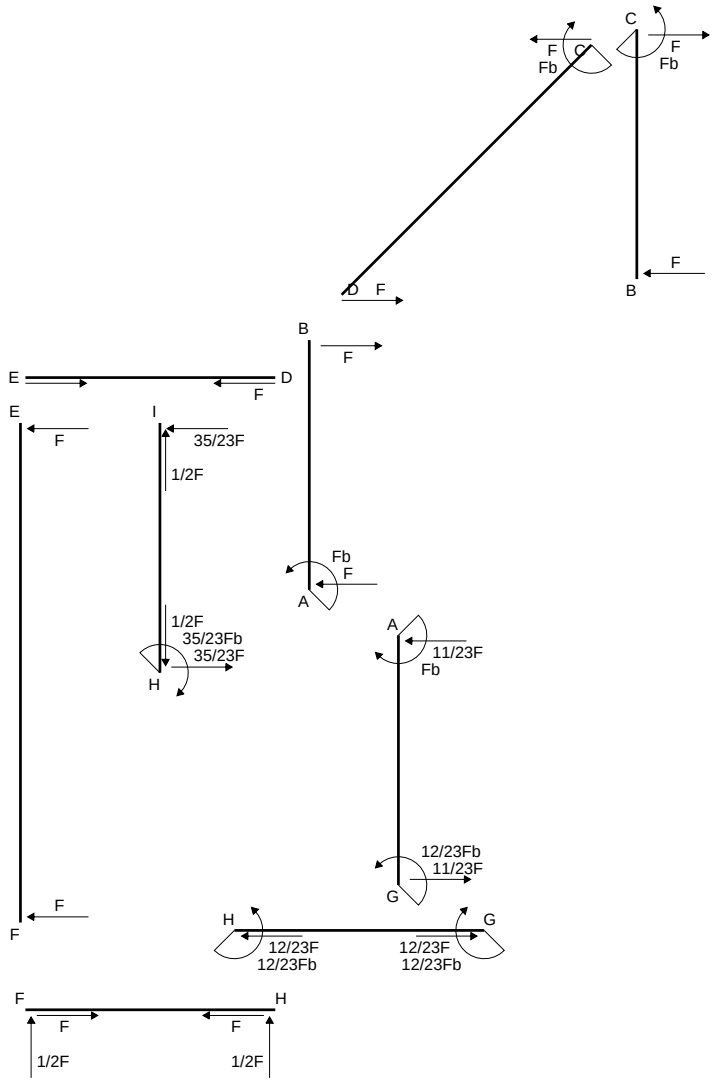
C
F
Fb
C
F
Fb
F
B
D F
B
F
E
D
F
E
F
I
35/23F
1/2F
Fb
F
A
1/2F
35/23Fb
35/23F
H
A
11/23F
Fb
12/23Fb
11/23F
G
F
F
H
G
12/23F
12/23Fb
12/23F
12/23Fb
F
H
F
F
1/2F
1/2F

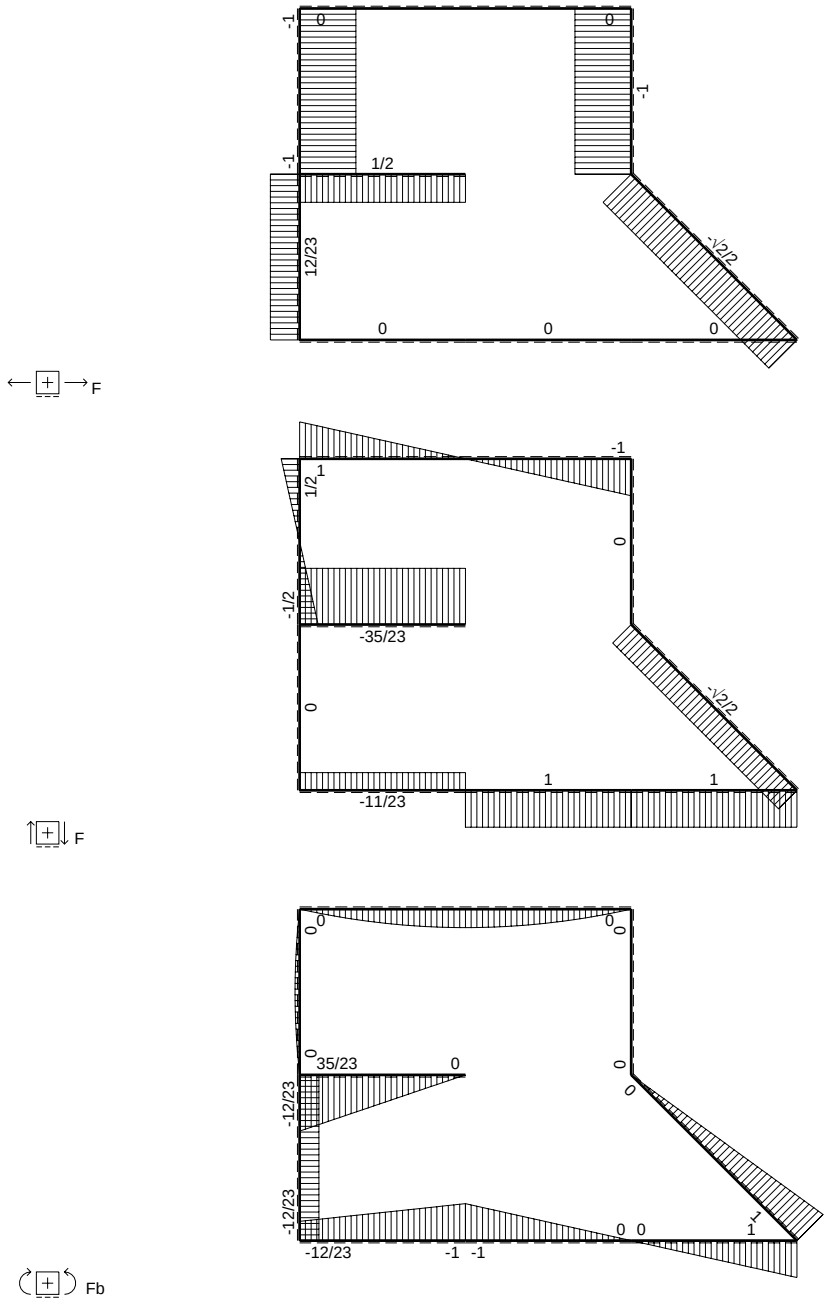
F
-1
0
0
-1
-1
1/2
12/23
-√2/2
0
0
0
F
-1
1/2
1
0
-1/2
-35/23
0
-√2/2
1
1
-11/23
F
0
0
0
0
35/23
0
0
0
-12/23
-12/23
0 0
1
1
-12/23
-1 -1
Fb

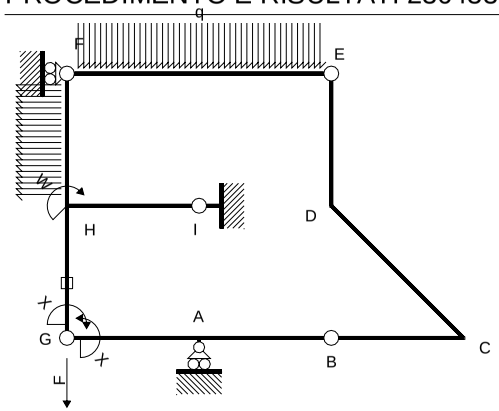

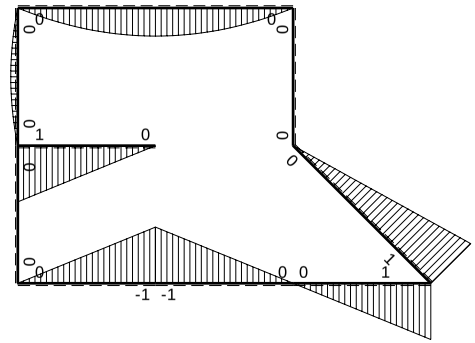

M_0 flessione da carichi assegnati

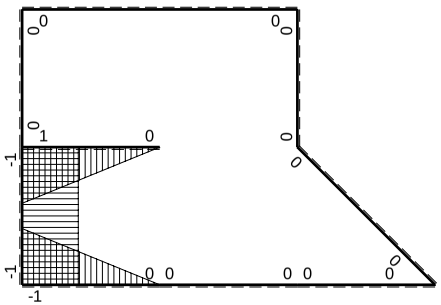

M_x flessione da iperstatica X=1

Quadro contributi PLV per iperstatica $X=W_{GA}$

→	$M_x(x)$	$M_0(x)$	M_xM_0	M_xM_x	$\int M_xM_0/EJdx$	$\int XM_xM_x/EJdx$
AB b	0	-Fb+Fx	0	0	0	0
BA b	0	Fx	0	0		
BC b	0	Fx	0	0	0	0
CB b	0	-Fb+Fx	0	0		
CD √2b	0	Fb-√2/2Fx	0	0	0	0
DE b	0	0	0	0	0	0
ED b	0	0	0	0		
EF 2b	0	$-Fx+1/2qx^2$	0	0	0	0
FE 2b	0	$Fx-1/2qx^2$	0	0		
GA b	-1+x/b	-Fx	$Fx-Fx^2/b$	$1-2x/b+x^2/b^2$	$1/6Fb^2/EJ$	1/3Xb/EJ
AG b	x/b	Fb-Fx	$Fx-Fx^2/b$	x^2/b^2		
FH b	0	$1/2Fx-1/2qx^2$	0	0	0	0
HF b	0	$-1/2Fx+1/2qx^2$	0	0		
HI b	1-x/b	Fb-Fx	$Fb-2Fx+Fx^2/b$	$1-2x/b+x^2/b^2$	$1/3Fb^2/EJ$	1/3Xb/EJ
IH b	-x/b	-Fx	Fx^2/b	x^2/b^2		
HG b	-1	0	0	1	0	Xb/EJ
GH b	1	0	0	1		
HG	elongazione asta $N_{1HG}\varepsilon_{HG}L_{HG}$				$-Fb^2/EJ$	
A	molla nodo $-V_{1A}(V_{0A}+XV_{1A})/k_A$				$-1/2Fb^2/EJ$	1/4Xb/EJ
	totali				$-Fb^2/EJ$	23/12Xb/EJ
	iperstatica $X=W_{GA}$				12/23Fb	

Sviluppi di calcolo iperstatica

$L^{XX}_{GA} = \int_o^b (1 - 2\,x/b + x^2/b^2)\ 1/EJ\ dx = [\ x - x^2/b + 1/3\ x^3/b^2\ ]_o^b\ 1/EJ$

$= (\ b - b + 1/3\ b\ )\ 1/EJ\ = 1/3\ b/EJ$

$L^{XX}_{AG} = \int_o^b (\ x^2/b^2\ )\ 1/EJ\ dx = [1/3\ x^3/b^2\ ]_o^b\ 1/EJ$

$= (1/3\ b\ )\ 1/EJ\ = 1/3\ b/EJ$

$L^{XX}_{HI} = \int_o^b (1 - 2\,x/b + x^2/b^2)\ 1/EJ\ dx = [\ x - x^2/b + 1/3\ x^3/b^2\ ]_o^b\ 1/EJ$

$= (\ b - b + 1/3\ b\ )\ 1/EJ\ = 1/3\ b/EJ$

$L^{XX}_{IH} = \int_o^b (\ x^2/b^2\ )\ 1/EJ\ dx = [1/3\ x^3/b^2\ ]_o^b\ 1/EJ$

$= (1/3\ b\ )\ 1/EJ\ = 1/3\ b/EJ$

$L^{XX}_{HG} = \int_o^b (1\ )\ 1/EJ\ dx = [\ x\ ]_o^b\ 1/EJ$

$= (\ b\ )\ 1/EJ\ =\ b/EJ$

$L^{XX}_{GH} = \int_o^b (1\ )\ 1/EJ\ dx = [\ x\ ]_o^b\ 1/EJ$

$= (\ b\ )\ 1/EJ\ =\ b/EJ$

$L^{Xo}_{GA} = \int_o^b (\ x/b - x^2/b^2\ )\ Fb\ 1/EJ\ dx = [1/2\ x^2/b - 1/3\ x^3/b^2\ ]_o^b\ Fb\ 1/EJ$

$= (1/2\ b - 1/3\ b\ )\ Fb\ 1/EJ\ = 1/6\ \ Fb^2/EJ$

$L^{Xo}_{AG} = \int_o^b (\ x/b - x^2/b^2\ )\ Fb\ 1/EJ\ dx = [1/2\ x^2/b - 1/3\ x^3/b^2\ ]_o^b\ Fb\ 1/EJ$

$= (1/2\ b - 1/3\ b\ )\ Fb\ 1/EJ\ = 1/6\ \ Fb^2/EJ$

$L^{Xo}_{HI} = \int_o^b (1 - 2\,x/b + x^2/b^2)\ Fb\ 1/EJ\ dx = [\ x - x^2/b + 1/3\ x^3/b^2\ ]_o^b\ Fb\ 1/EJ$

$= (\ b - b + 1/3\ b\ )\ Fb\ 1/EJ\ = 1/3\ \ Fb^2/EJ$

$L^{Xo}_{IH} = \int_o^b (\ x^2/b^2\ )\ Fb\ 1/EJ\ dx = [1/3\ x^3/b^2\ ]_o^b\ Fb\ 1/EJ$

$= (1/3\ b\ )\ Fb\ 1/EJ\ = 1/3\ \ Fb^2/EJ$

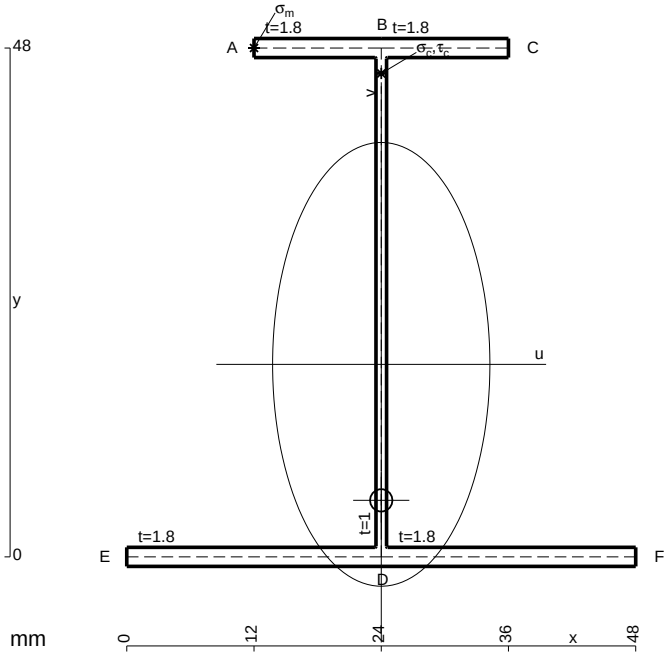

A = 177.6 mm^2
J_u = 77813. mm^4
J_v = 18662. mm^4
J_t = 156. mm^4
y_o = -12.83 mm
y_g = 18.16 mm
T_y = 1130. N
M_x = -598900. Nmm
x_m = 12. mm
y_m = 48. mm
u_m = -12. mm
v_m = 29.84 mm
$\sigma_m = -Mv/J_u$ = 229.7 N/mm^2
x_c = 24. mm
y_c = 48. mm
v_c = 29.84 mm
$\sigma_c = -Mv/J_u$ = 229.7 N/mm^2
$\tau_c = TS^*/tJ_u$ = 18.72 N/mm^2
$\tau_g = TS^*/tJ_u$ = 18.72 N/mm^2
t_c = 1130. mm
$\sigma_o = \sqrt{\sigma^2 + 3\tau^2}$ = 231.9 N/mm^2

ESΣ05.xxxx.023

@ Adolfo Zavelani Rossi, Politecnico di Milano, vers.27.03.13 01.12.25

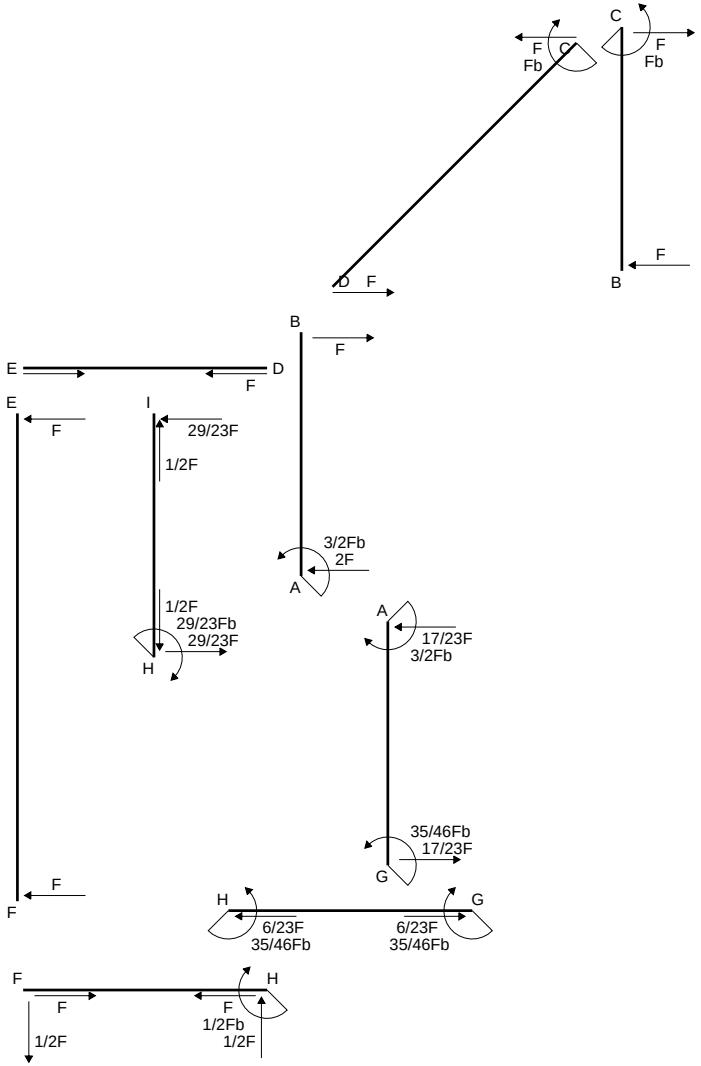
C
F
Fb
C
F
Fb
F
D
F
B
B
F
E
D
F
E
F
I
29/23F
1/2F
3/2Fb
2F
A
1/2F
29/23Fb
29/23F
H
A
17/23F
3/2Fb
35/46Fb
17/23F
G
F
F
H
G
6/23F
35/46Fb
6/23F
35/46Fb
F
F
H
F
1/2Fb
1/2F
1/2F

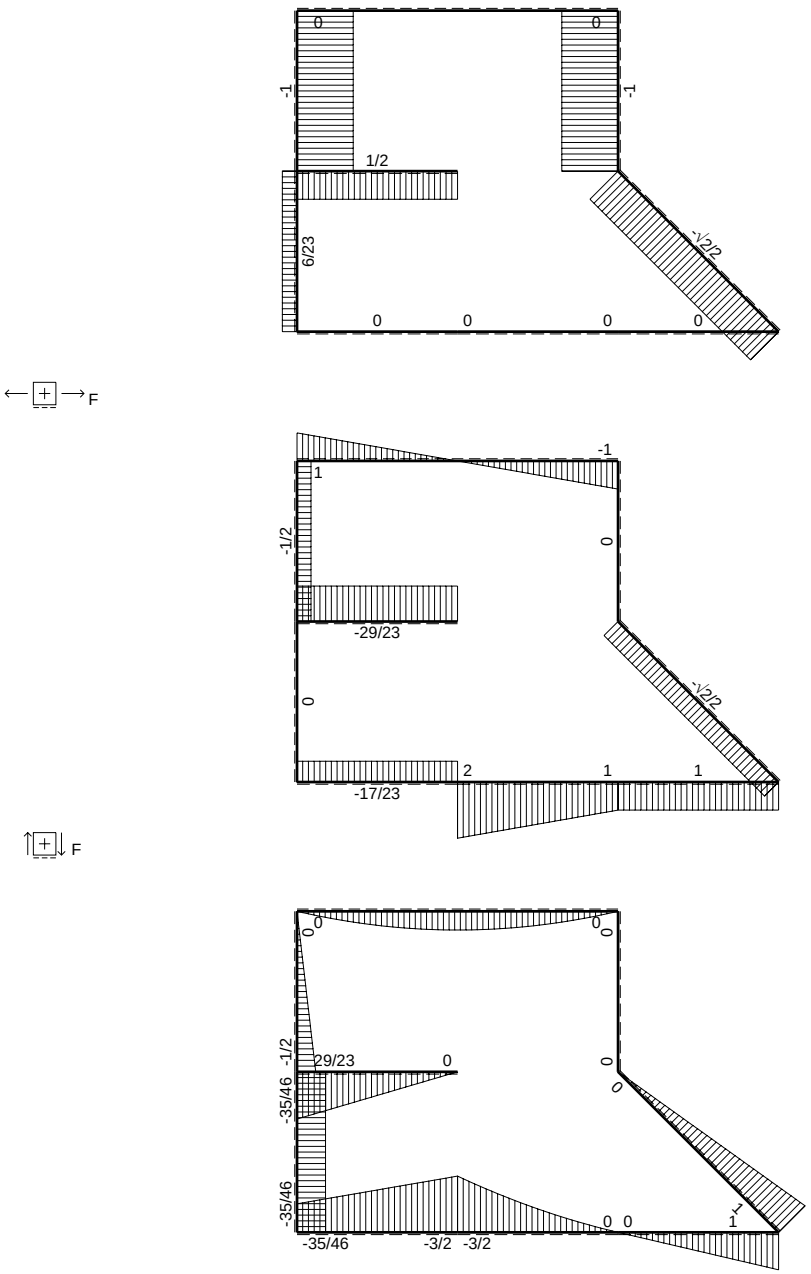
F
0
0
-1
-1
1/2
6/23
-1/2√2
0
0
0
0
F
-1
1
-1/2
0
-29/23
0
-1/2√2
2
1
1
-17/23
F
0
0
0
0
-1/2
29/23
0
0
0
-35/46
-35/46
0
0
1
-35/46
-3/2
-3/2
Fb

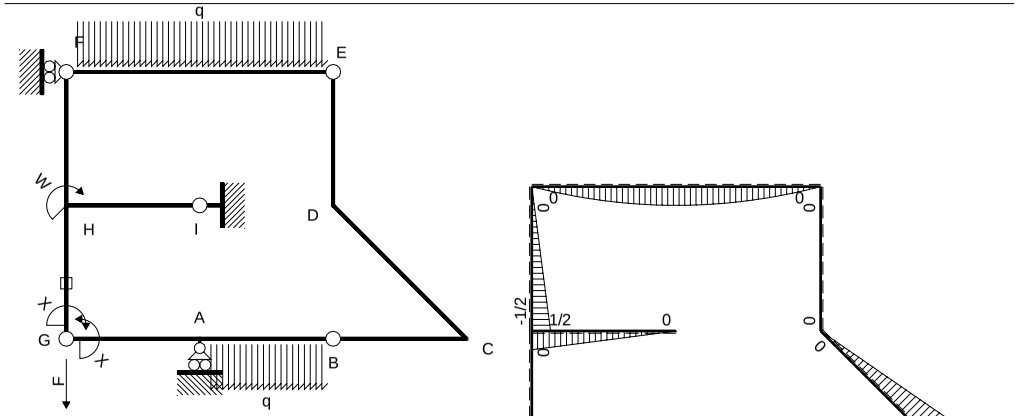

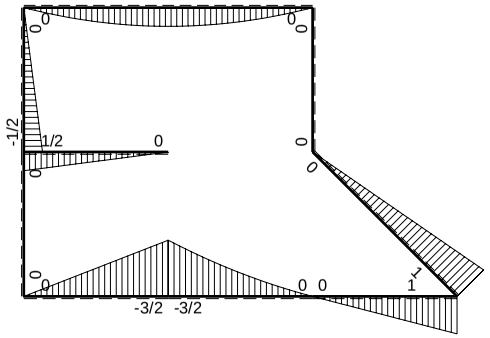

M_0 flessione da carichi assegnati

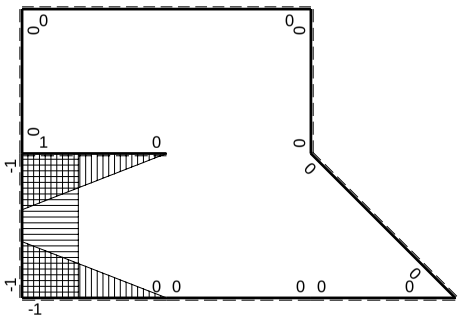

M_x flessione da iperstatica X=1

Quadro contributi PLV per iperstatica $X=W_{GA}$

→	$M_x(x)$	$M_0(x)$	M_xM_0	M_xM_x	$\int M_xM_0/EJdx$	$\int XM_xM_x/EJdx$
AB b	0	$-3/2Fb+2Fx-1/2qx^2$	0	0	0	0
BA b	0	$Fx+1/2qx^2$	0	0		
BC b	0	Fx	0	0	0	0
CB b	0	-Fb+Fx	0	0		
CD √2b	0	Fb-√2/2Fx	0	0	0	0
DE b	0	0	0	0	0	0
ED b	0	0	0	0		
EF 2b	0	$-Fx+1/2qx^2$	0	0	0	0
FE 2b	0	$Fx-1/2qx^2$	0	0		
GA b	-1+x/b	-3/2Fx	$3/2Fx-3/2Fx^2/b$	$1-2x/b+x^2/b^2$	$1/4Fb^2/EJ$	1/3Xb/EJ
AG b	x/b	3/2Fb-3/2Fx	$3/2Fx-3/2Fx^2/b$	x^2/b^2		
FH b	0	-1/2Fx	0	0	0	0
HF b	0	1/2Fb-1/2Fx	0	0		
HI b	1-x/b	1/2Fb-1/2Fx	$1/2Fb-Fx+1/2Fx^2/b$	$1-2x/b+x^2/b^2$	$1/6Fb^2/EJ$	1/3Xb/EJ
IH b	-x/b	-1/2Fx	$1/2Fx^2/b$	x^2/b^2		
HG b	-1	0	0	1	0	Xb/EJ
GH b	1	0	0	1		
HG	elongazione asta $N_{1HG}\varepsilon_{HG}L_{HG}$				$-Fb^2/EJ$	
A	molla nodo $-V_{1A}(V_{0A}+XV_{1A})/k_A$				-7/8Fb²/EJ	1/4Xb/EJ
	totali				$-35/24Fb^2/EJ$	23/12Xb/EJ
	iperstatica $X=W_{GA}$				35/46Fb	

Sviluppi di calcolo iperstatica

$L^{XX}_{GA} = \int_o^b (1 - 2\,x/b + x^2/b^2)\ 1/EJ\ dx = [\,x - x^2/b + 1/3\,x^3/b^2\,]_o^b\ 1/EJ$

$= (\,b - b + 1/3\,b\,)\ 1/EJ = 1/3\ b/EJ$

$L^{XX}_{AG} = \int_o^b (\,x^2/b^2\,)\ 1/EJ\ dx = [1/3\,x^3/b^2\,]_o^b\ 1/EJ$

$= (1/3\,b\,)\ 1/EJ = 1/3\ b/EJ$

$L^{XX}_{HI} = \int_o^b (1 - 2\,x/b + x^2/b^2)\ 1/EJ\ dx = [\,x - x^2/b + 1/3\,x^3/b^2\,]_o^b\ 1/EJ$

$= (\,b - b + 1/3\,b\,)\ 1/EJ = 1/3\ b/EJ$

$L^{XX}_{IH} = \int_o^b (\,x^2/b^2\,)\ 1/EJ\ dx = [1/3\,x^3/b^2\,]_o^b\ 1/EJ$

$= (1/3\,b\,)\ 1/EJ = 1/3\ b/EJ$

$L^{XX}_{HG} = \int_o^b (1)\ 1/EJ\ dx = [\,x\,]_o^b\ 1/EJ$

$= (\,b\,)\ 1/EJ = b/EJ$

$L^{XX}_{GH} = \int_o^b (1)\ 1/EJ\ dx = [\,x\,]_o^b\ 1/EJ$

$= (\,b\,)\ 1/EJ = b/EJ$

$L^{Xo}_{GA} = \int_o^b (3/2\,x/b - 3/2\,x^2/b^2)\ Fb\ 1/EJ\ dx = [3/4\,x^2/b - 1/2\,x^3/b^2\,]_o^b\ Fb\ 1/EJ$

$= (3/4\,b - 1/2\,b\,)\ Fb\ 1/EJ = 1/4\ Fb^2/EJ$

$L^{Xo}_{AG} = \int_o^b (3/2\,x/b - 3/2\,x^2/b^2)\ Fb\ 1/EJ\ dx = [3/4\,x^2/b - 1/2\,x^3/b^2\,]_o^b\ Fb\ 1/EJ$

$= (3/4\,b - 1/2\,b\,)\ Fb\ 1/EJ = 1/4\ Fb^2/EJ$

$L^{Xo}_{HI} = \int_o^b (1/2 - x/b + 1/2\,x^2/b^2)\ Fb\ 1/EJ\ dx = [1/2\,x - 1/2\,x^2/b + 1/6\,x^3/b^2\,]_o^b\ Fb\ 1/EJ$

$= (1/2\,b - 1/2\,b + 1/6\,b\,)\ Fb\ 1/EJ = 1/6\ Fb^2/EJ$

$L^{Xo}_{IH} = \int_o^b (1/2\,x^2/b^2)\ Fb\ 1/EJ\ dx = [1/6\,x^3/b^2\,]_o^b\ Fb\ 1/EJ$

$= (1/6\,b\,)\ Fb\ 1/EJ = 1/6\ Fb^2/EJ$

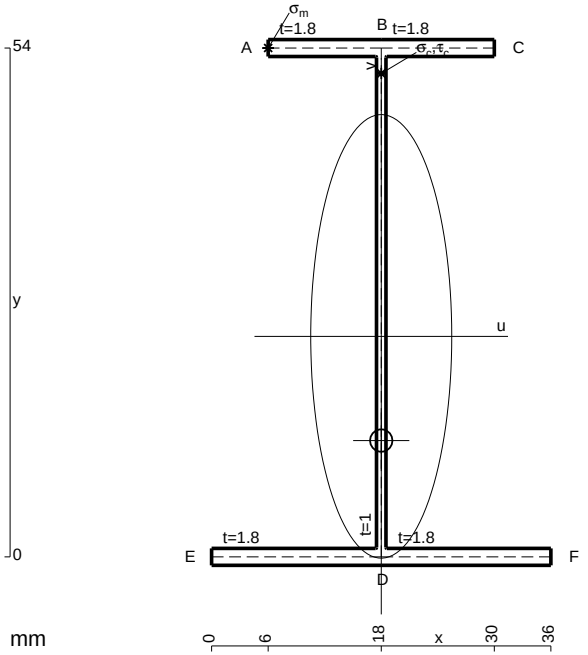

A = 162. mm^2
J_u = 89755. mm^4
J_v = 9072. mm^4
J_t = 134.6 mm^4
y_o = -11.06 mm
y_g = 23.4 mm
T_y = 1460. N
M_x = -700800. Nmm
x_m = 6. mm
y_m = 54. mm
u_m = -12. mm
v_m = 30.6 mm
$\sigma_m = -Mv/J_u$ = 238.9 N/mm^2
x_c = 18. mm
y_c = 54. mm
v_c = 30.6 mm
$\sigma_c = -Mv/J_u$ = 238.9 N/mm^2
$\tau_c = TS^*/tJ_u$ = 21.5 N/mm^2
$\tau_g = TS^*/tJ_u$ = 21.5 N/mm^2
t_c = 730. mm
$\sigma_o = \sqrt{\sigma^2 + 3\tau^2}$ = 241.8 N/mm^2

ESΣ05.xxxx.024

@ Adolfo Zavelani Rossi, Politecnico di Milano, vers.27.03.13 01.12.25

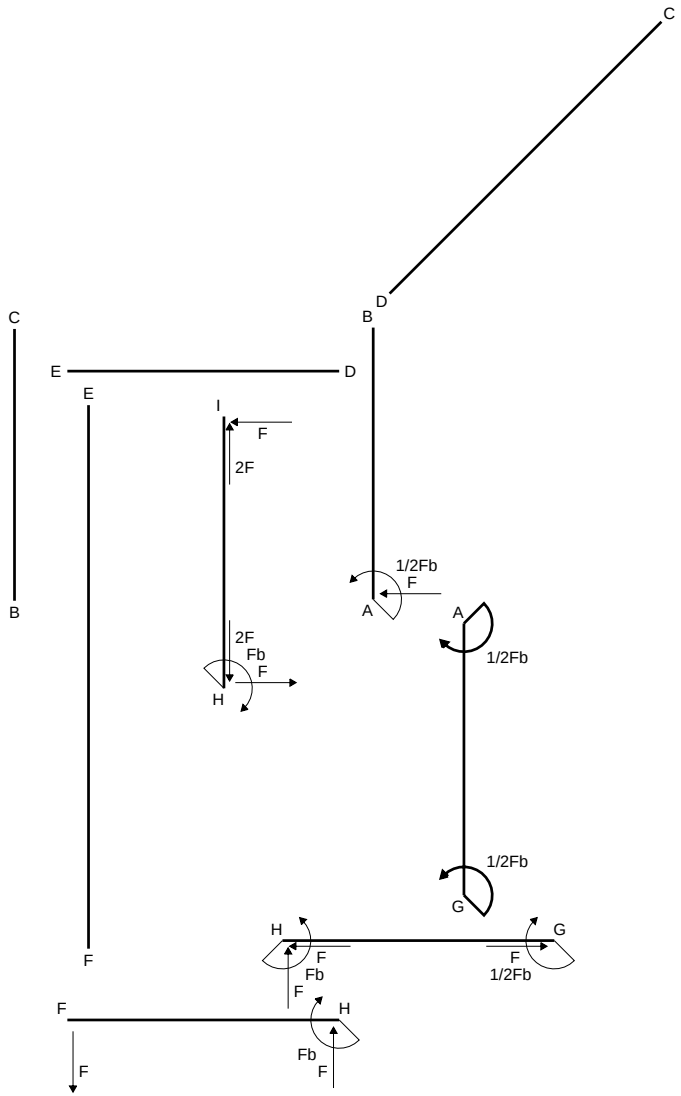
C
B
D
C
B
E
D
E
I
F
2F
1/2Fb
F
A
A
1/2Fb
2F
Fb
F
H
1/2Fb
G
H
G
F
F
Fb
F
1/2Fb
F
H
Fb
F
F

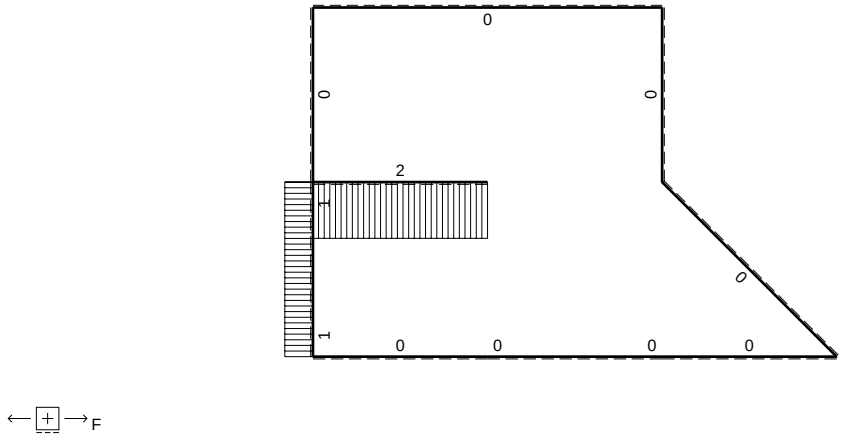
0
0
0
2
1
0
1
0
0
0
0

F

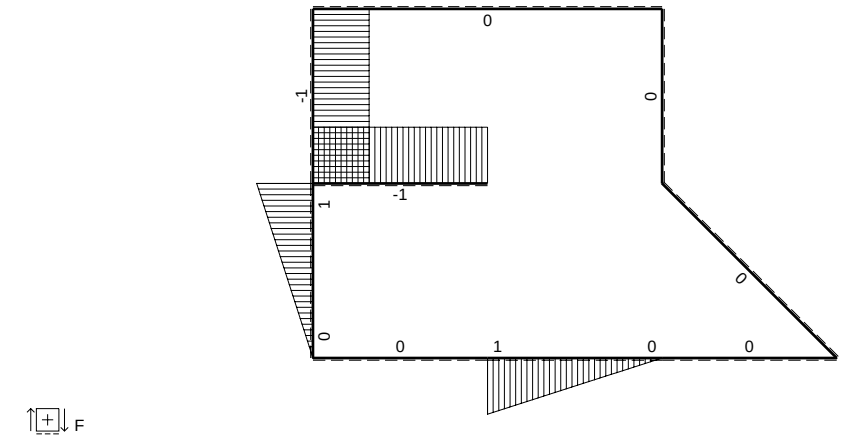
0
-1
0
-1
1
0
0
1
0
0

F

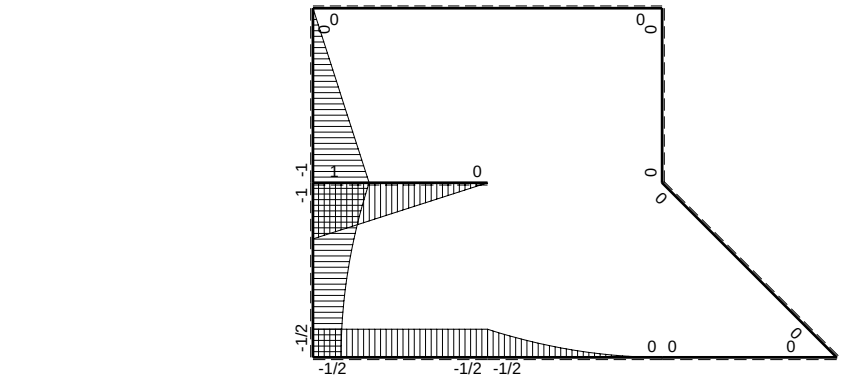
0
0
0
0
-1
1
0
-1
0
0
-1/2
0 0
0
-1/2
-1/2 -1/2

Fb

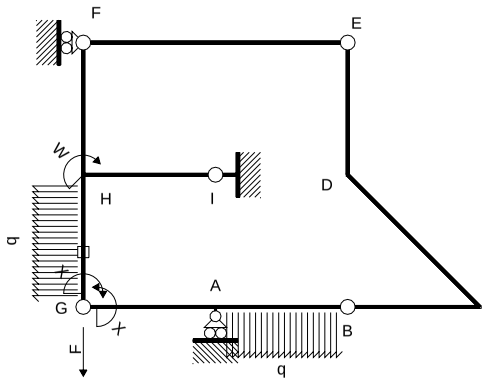

Schema di calcolo iperstatico

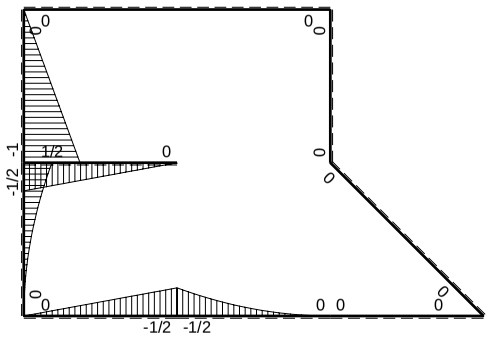

M_0 flessione da carichi assegnati

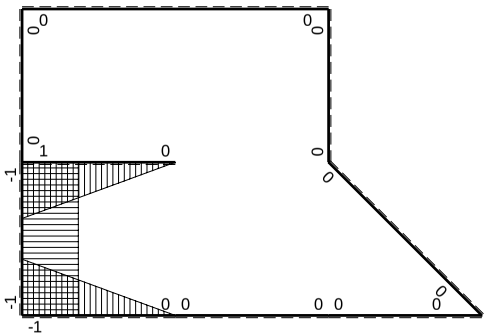

M_x flessione da iperstatica X=1

Quadro contributi PLV per iperstatica $X=W_{GA}$

→	$M_x(x)$	$M_o(x)$	M_xM_o	M_xM_x	$\int M_xM_o/EJdx$	$\int XM_xM_x/EJdx$
AB b	0	$-1/2Fb+Fx-1/2qx^2$	0	0	0	0
BA b	0	$1/2qx^2$	0	0		
BC b	0	0	0	0	0	0
CB b	0	0	0	0		
CD $\sqrt{2}$b	0	0	0	0	0	0
DE b	0	0	0	0	0	0
ED b	0	0	0	0		
EF 2b	0	0	0	0	0	0
FE 2b	0	0	0	0		
GA b	$-1+x/b$	$-1/2Fx$	$1/2Fx-1/2Fx^2/b$	$1-2x/b+x^2/b^2$	$1/12Fb^2/EJ$	$1/3Xb/EJ$
AG b	x/b	$1/2Fb-1/2Fx$	$1/2Fx-1/2Fx^2/b$	x^2/b^2		
FH b	0	$-Fx$	0	0	0	0
HF b	0	$Fb-Fx$	0	0		
HI b	$1-x/b$	$1/2Fb-1/2Fx$	$1/2Fb-Fx+1/2Fx^2/b$	$1-2x/b+x^2/b^2$	$1/6Fb^2/EJ$	$1/3Xb/EJ$
IH b	$-x/b$	$-1/2Fx$	$1/2Fx^2/b$	x^2/b^2		
HG b	-1	$-1/2Fb+Fx-1/2qx^2$	$1/2Fb-Fx+1/2Fx^2/b$	1	$1/6Fb^2/EJ$	Xb/EJ
GH b	1	$1/2qx^2$	$1/2Fx^2/b$	1		
HG	elongazione asta $N_{1HG}\varepsilon_{HG}L_{HG}$				$-Fb^2/EJ$	
A	molla nodo $-V_{1A}(V_{0A}+XV_{1A})/k_A$				$-3/8Fb^2/EJ$	$1/4Xb/EJ$
	totali				$-23/24Fb^2/EJ$	$23/12Xb/EJ$
	iperstatica $X=W_{GA}$				$1/2Fb$	

Sviluppi di calcolo iperstatica

$L^{XX}_{GA} = \int_o^b (1 - 2\,x/b + x^2/b^2)\ 1/EJ\ dx = [\,x - x^2/b + 1/3\,x^3/b^2\,]_o^b\ 1/EJ$

$= (\,b - b + 1/3\,b\,)\ 1/EJ = 1/3\ b/EJ$

$L^{XX}_{AG} = \int_o^b (\,x^2/b^2\,)\ 1/EJ\ dx = [1/3\,x^3/b^2\,]_o^b\ 1/EJ$

$= (1/3\,b)\ 1/EJ = 1/3\ b/EJ$

$L^{XX}_{HI} = \int_o^b (1 - 2\,x/b + x^2/b^2)\ 1/EJ\ dx = [\,x - x^2/b + 1/3\,x^3/b^2\,]_o^b\ 1/EJ$

$= (\,b - b + 1/3\,b\,)\ 1/EJ = 1/3\ b/EJ$

$L^{XX}_{IH} = \int_o^b (\,x^2/b^2\,)\ 1/EJ\ dx = [1/3\,x^3/b^2\,]_o^b\ 1/EJ$

$= (1/3\,b)\ 1/EJ = 1/3\ b/EJ$

$L^{XX}_{HG} = \int_o^b (1)\ 1/EJ\ dx = [\,x\,]_o^b\ 1/EJ$

$= (\,b\,)\ 1/EJ = b/EJ$

$L^{XX}_{GH} = \int_o^b (1)\ 1/EJ\ dx = [\,x\,]_o^b\ 1/EJ$

$= (\,b\,)\ 1/EJ = b/EJ$

$L^{Xo}_{GA} = \int_o^b (1/2\,x/b - 1/2\,x^2/b^2)\ Fb\ 1/EJ\ dx = [1/4\,x^2/b - 1/6\,x^3/b^2\,]_o^b\ Fb\ 1/EJ$

$= (1/4\,b - 1/6\,b\,)\ Fb\ 1/EJ = 1/12\ Fb^2/EJ$

$L^{Xo}_{AG} = \int_o^b (1/2\,x/b - 1/2\,x^2/b^2)\ Fb\ 1/EJ\ dx = [1/4\,x^2/b - 1/6\,x^3/b^2\,]_o^b\ Fb\ 1/EJ$

$= (1/4\,b - 1/6\,b\,)\ Fb\ 1/EJ = 1/12\ Fb^2/EJ$

$L^{Xo}_{HI} = \int_o^b (1/2 - x/b + 1/2\,x^2/b^2)\ Fb\ 1/EJ\ dx = [1/2\,x - 1/2\,x^2/b + 1/6\,x^3/b^2\,]_o^b\ Fb\ 1/EJ$

$= (1/2\,b - 1/2\,b + 1/6\,b\,)\ Fb\ 1/EJ = 1/6\ Fb^2/EJ$

$L^{Xo}_{IH} = \int_o^b (1/2\,x^2/b^2)\ Fb\ 1/EJ\ dx = [1/6\,x^3/b^2\,]_o^b\ Fb\ 1/EJ$

$= (1/6\,b)\ Fb\ 1/EJ = 1/6\ Fb^2/EJ$

$L^{Xo}_{HG} = \int_o^b (1/2 - x/b + 1/2\,x^2/b^2)\ Fb\ 1/EJ\ dx - 1\ \ (-1)\ \ (-1)\ \ Fb^2/EJ$

$= [1/2\,x - 1/2\,x^2/b + 1/6\,x^3/b^2\,]_o^b\ Fb\ 1/EJ\ -\ 1\ \ (-1)\ \ (-1)\ \ Fb^2/EJ$

$= (1/2\,b - 1/2\,b + 1/6\,b\,)\ Fb\ 1/EJ\ -\ 1\ \ (-1)\ \ (-1)\ \ Fb^2/EJ = -5/6\ \ Fb^2/EJ$

$L^{Xo}_{GH} = \int_o^b (1/2\,x^2/b^2)\ Fb\ 1/EJ\ dx - 1\ \ (-1)\ \ (-1)\ \ Fb^2/EJ = [1/6\,x^3/b^2\,]_o^b\ Fb\ 1/EJ\ -\ 1\ \ (-1)\ \ (-1)\ \ Fb^2/EJ$

$= (1/6\,b)\ Fb\ 1/EJ\ -\ 1\ \ (-1)\ \ (-1)\ \ Fb^2/EJ = -5/6\ \ Fb^2/EJ$

PROCEDIMENTO E RISULTATI 237330 ESΣ05.xxxx.025

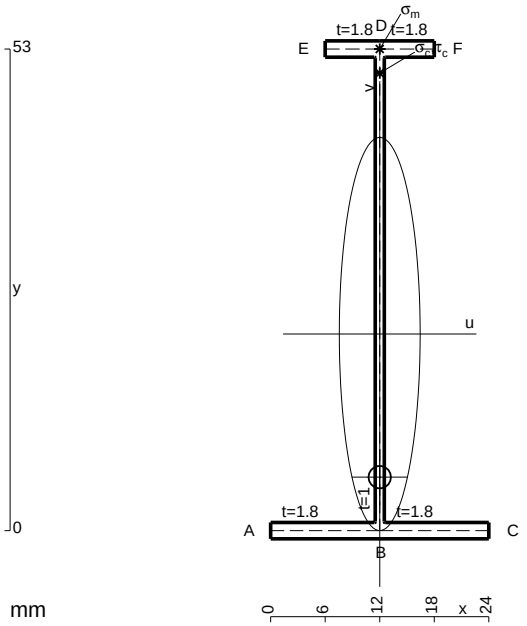

A = 117.8 mm^2
J_u = 55131. mm^4
J_v = 2333. mm^4
J_t = 87.65 mm^4
y_o = -15.75 mm
y_g = 21.64 mm
T_y = -520. N
M_x = -348400. Nmm
x_m = 12. mm
y_m = 53. mm
v_m = 31.36 mm
$\sigma_m = -Mv/J_u$ = 198.2 N/mm^2
y_c = 2. mm
u_c = -12. mm
v_c = -19.64 mm
$\sigma_c = -Mv/J_u$ = 198.2 N/mm^2
$\tau_c = TS^*/tJ_u$ = 6.389 N/mm^2
$\tau_g = TS^*/tJ_u$ = 6.389 N/mm^2
t_c = 520. mm
$\sigma_o = \sqrt{\sigma^2 + 3\tau^2}$ = 198.5 N/mm^2

@ Adolfo Zavelani Rossi, Politecnico di Milano, vers.27.03.13 01.12.25

ESΣ05.xxxx.025

@ Adolfo Zavelani Rossi, Politecnico di Milano, vers.27.03.13 01.12.25

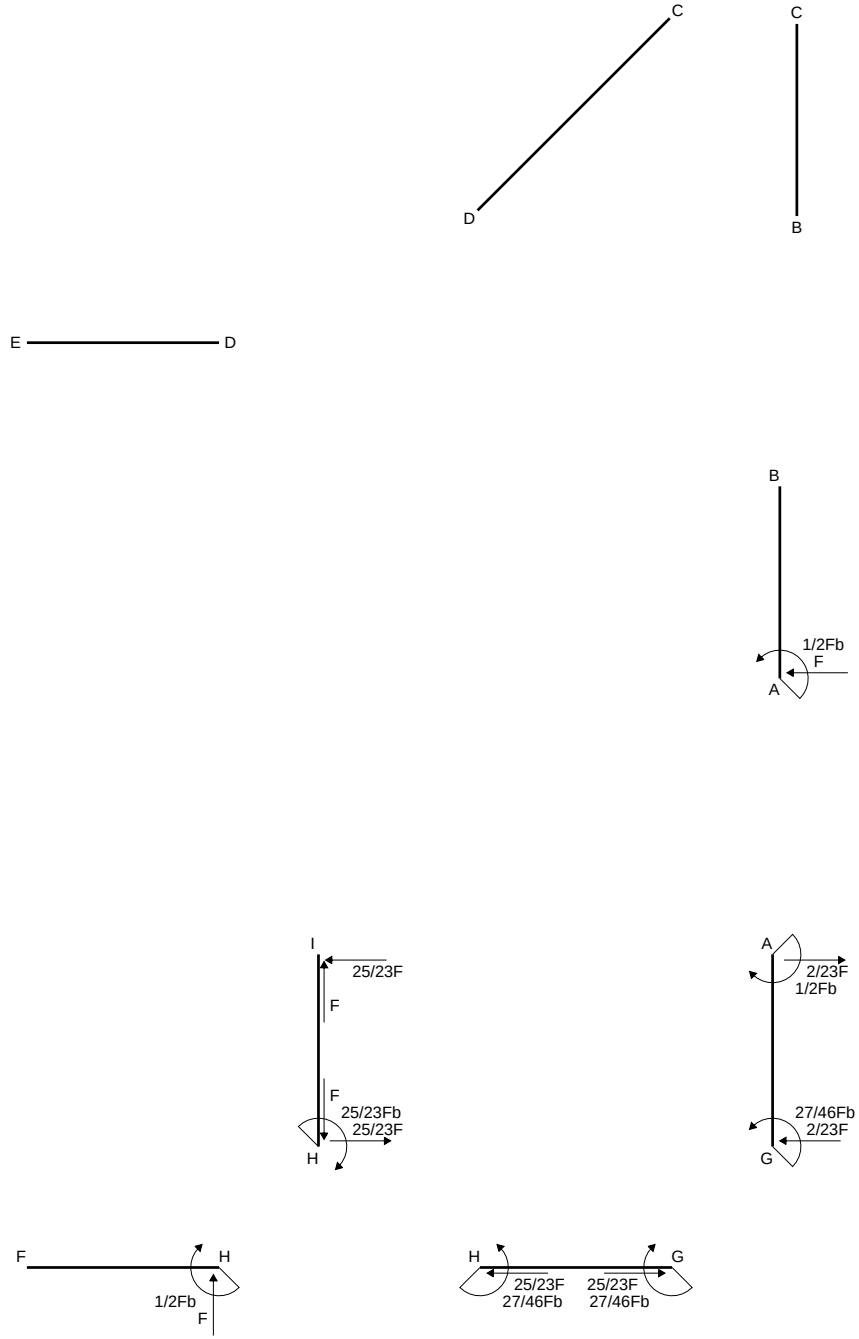
C
D
C
B
E
D
B
1/2Fb
F
A
E
F
I
25/23F
F
F
25/23Fb
25/23F
H
A
2/23F
1/2Fb
27/46Fb
2/23F
G
F
H
1/2Fb
F
H
G
25/23F
27/46Fb
25/23F
27/46Fb

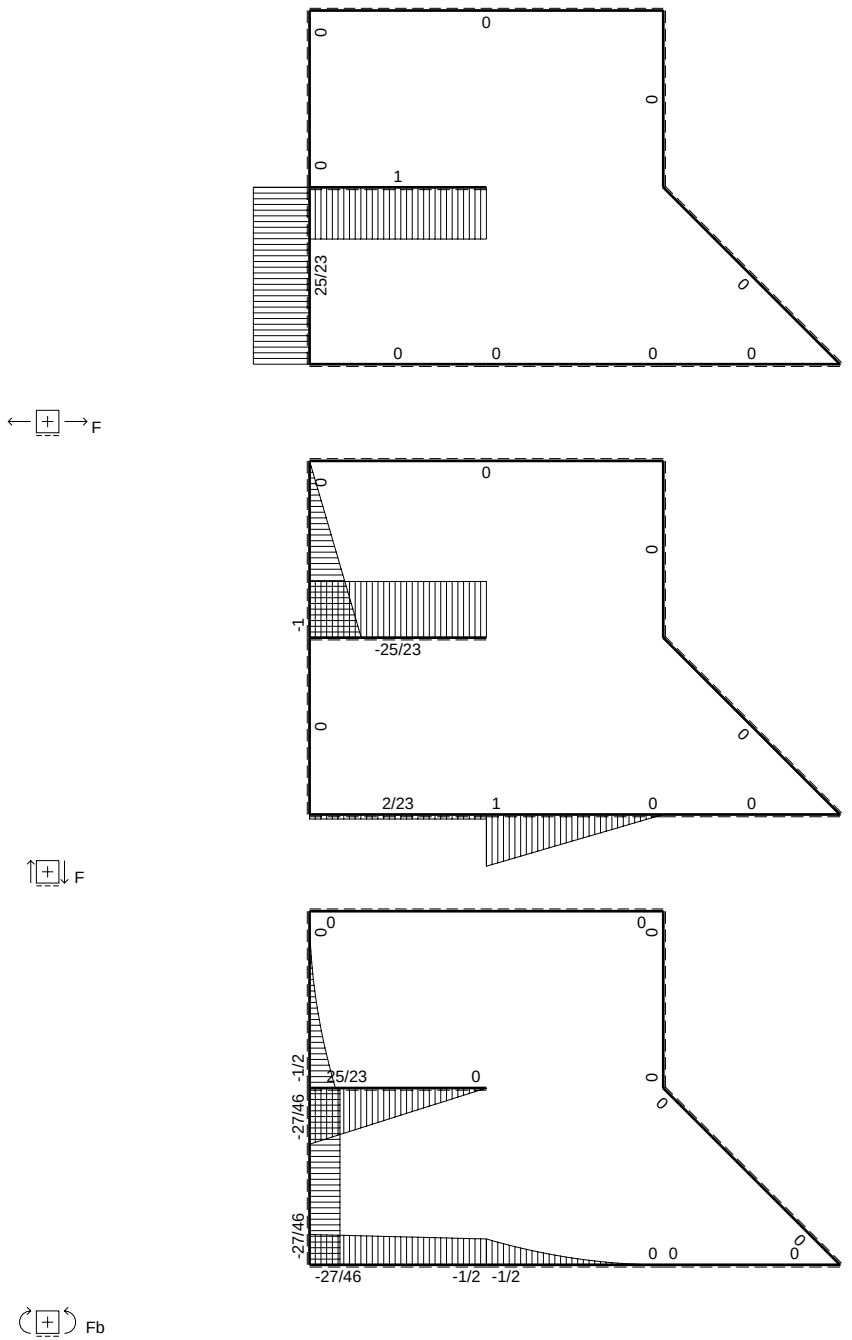
0
0
0
0
1
25/23
0
0
0
0
0
F
0
0
0
-1
-25/23
0
0
2/23
1
0
0
F
0
0
0
0
-1/2
25/23
0
-27/46
0
0
-27/46
0 0
0
-27/46
-1/2
-1/2
Fb

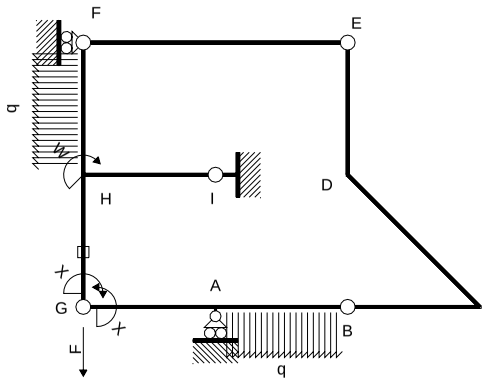

Schema di calcolo iperstatico

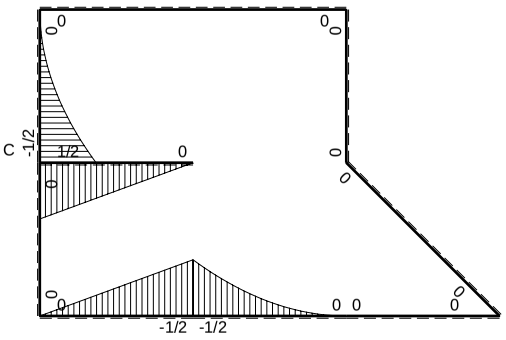

M_0 flessione da carichi assegnati

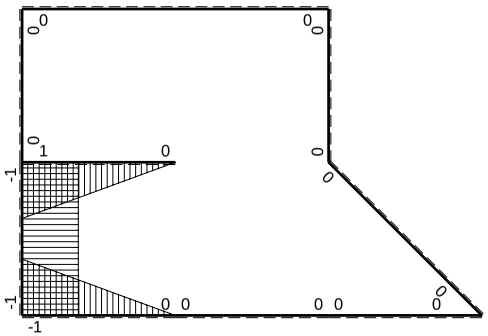

M_x flessione da iperstatica X=1

Quadro contributi PLV per iperstatica $X=W_{GA}$

→	$M_x(x)$	$M_o(x)$	M_xM_o	M_xM_x	$\int M_xM_o/EJdx$	$\int XM_xM_x/EJdx$
AB b	0	$-1/2Fb+Fx-1/2qx^2$	0	0	0	0
BA b	0	$1/2qx^2$	0	0		
BC b	0	0	0	0	0	0
CB b	0	0	0	0		
CD √2b	0	0	0	0	0	0
DE b	0	0	0	0	0	0
ED b	0	0	0	0		
EF 2b	0	0	0	0	0	0
FE 2b	0	0	0	0		
GA b	-1+x/b	-1/2Fx	$1/2Fx-1/2Fx^2/b$	$1-2x/b+x^2/b^2$	$1/12Fb^2/EJ$	$1/3Xb/EJ$
AG b	x/b	$1/2Fb-1/2Fx$	$1/2Fx-1/2Fx^2/b$	x^2/b^2		
FH b	0	$-1/2qx^2$	0	0	0	0
HF b	0	$1/2Fb-Fx+1/2qx^2$	0	0		
HI b	1-x/b	$1/2Fb-1/2Fx$	$1/2Fb-Fx+1/2Fx^2/b$	$1-2x/b+x^2/b^2$	$1/6Fb^2/EJ$	$1/3Xb/EJ$
IH b	-x/b	$-1/2Fx$	$1/2Fx^2/b$	x^2/b^2		
HG b	-1	0	0	1	0	Xb/EJ
GH b	1	0	0	1		
HG	elongazione asta $N_{1HG}\varepsilon_{HG}L_{HG}$				$-Fb^2/EJ$	
A	molla nodo $-V_{1A}(V_{0A}+XV_{1A})/k_A$				$-3/8Fb^2/EJ$	$1/4Xb/EJ$
	totali				$-9/8Fb^2/EJ$	$23/12Xb/EJ$
	iperstatica $X=W_{GA}$				27/46Fb	

Sviluppi di calcolo iperstatica

$L^{XX}_{GA} = \int_o^b (1 - 2\,x/b + x^2/b^2)\ 1/EJ\ dx = [\,x - x^2/b + 1/3\,x^3/b^2\,]_o^b\ 1/EJ$

$= (\,b - b + 1/3\,b\,)\ 1/EJ = 1/3\ b/EJ$

$L^{XX}_{AG} = \int_o^b (\,x^2/b^2\,)\ 1/EJ\ dx = [1/3\,x^3/b^2\,]_o^b\ 1/EJ$

$= (1/3\,b)\ 1/EJ = 1/3\ b/EJ$

$L^{XX}_{HI} = \int_o^b (1 - 2\,x/b + x^2/b^2)\ 1/EJ\ dx = [\,x - x^2/b + 1/3\,x^3/b^2\,]_o^b\ 1/EJ$

$= (\,b - b + 1/3\,b\,)\ 1/EJ = 1/3\ b/EJ$

$L^{XX}_{IH} = \int_o^b (\,x^2/b^2\,)\ 1/EJ\ dx = [1/3\,x^3/b^2\,]_o^b\ 1/EJ$

$= (1/3\,b)\ 1/EJ = 1/3\ b/EJ$

$L^{XX}_{HG} = \int_o^b (1)\ 1/EJ\ dx = [\,x\,]_o^b\ 1/EJ$

$= (\,b\,)\ 1/EJ = b/EJ$

$L^{XX}_{GH} = \int_o^b (1)\ 1/EJ\ dx = [\,x\,]_o^b\ 1/EJ$

$= (\,b\,)\ 1/EJ = b/EJ$

$L^{Xo}_{GA} = \int_o^b (1/2\,x/b - 1/2\,x^2/b^2)\ Fb\ 1/EJ\ dx = [1/4\,x^2/b - 1/6\,x^3/b^2\,]_o^b\ Fb\ 1/EJ$

$= (1/4\,b - 1/6\,b)\ Fb\ 1/EJ = 1/12\ Fb^2/EJ$

$L^{Xo}_{AG} = \int_o^b (1/2\,x/b - 1/2\,x^2/b^2)\ Fb\ 1/EJ\ dx = [1/4\,x^2/b - 1/6\,x^3/b^2\,]_o^b\ Fb\ 1/EJ$

$= (1/4\,b - 1/6\,b)\ Fb\ 1/EJ = 1/12\ Fb^2/EJ$

$L^{Xo}_{HI} = \int_o^b (1/2 - x/b + 1/2\,x^2/b^2)\ Fb\ 1/EJ\ dx = [1/2\,x - 1/2\,x^2/b + 1/6\,x^3/b^2\,]_o^b\ Fb\ 1/EJ$

$= (1/2\,b - 1/2\,b + 1/6\,b)\ Fb\ 1/EJ = 1/6\ Fb^2/EJ$

$L^{Xo}_{IH} = \int_o^b (1/2\,x^2/b^2)\ Fb\ 1/EJ\ dx = [1/6\,x^3/b^2\,]_o^b\ Fb\ 1/EJ$

$= (1/6\,b)\ Fb\ 1/EJ = 1/6\ Fb^2/EJ$

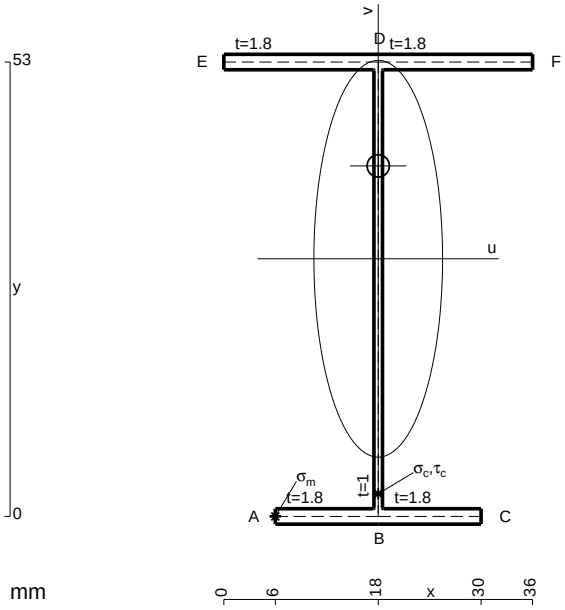

A = 161. mm^2
J_u = 86214. mm^4
J_v = 9072. mm^4
J_t = 134.3 mm^4
y_o = 10.83 mm
y_g = 30.06 mm
T_y = 1670. N
M_x = -601200. Nmm
x_m = 6. mm
u_m = -12. mm
v_m = -30.06 mm
$\sigma_m = -Mv/J_u$ = -209.6 N/mm^2
x_c = 18. mm
v_c = -30.06 mm
$\sigma_c = -Mv/J_u$ = -209.6 N/mm^2
$\tau_c = TS^*/tJ_u$ = 25.15 N/mm^2
$\tau_g = TS^*/tJ_u$ = 25.15 N/mm^2
t_c = 1670. mm
$\sigma_o = \sqrt{\sigma^2 + 3\tau^2}$ = 214.1 N/mm^2

ESΣ05.xxxx.026

@ Adolfo Zavelani Rossi, Politecnico di Milano, vers.27.03.13 01.12.25

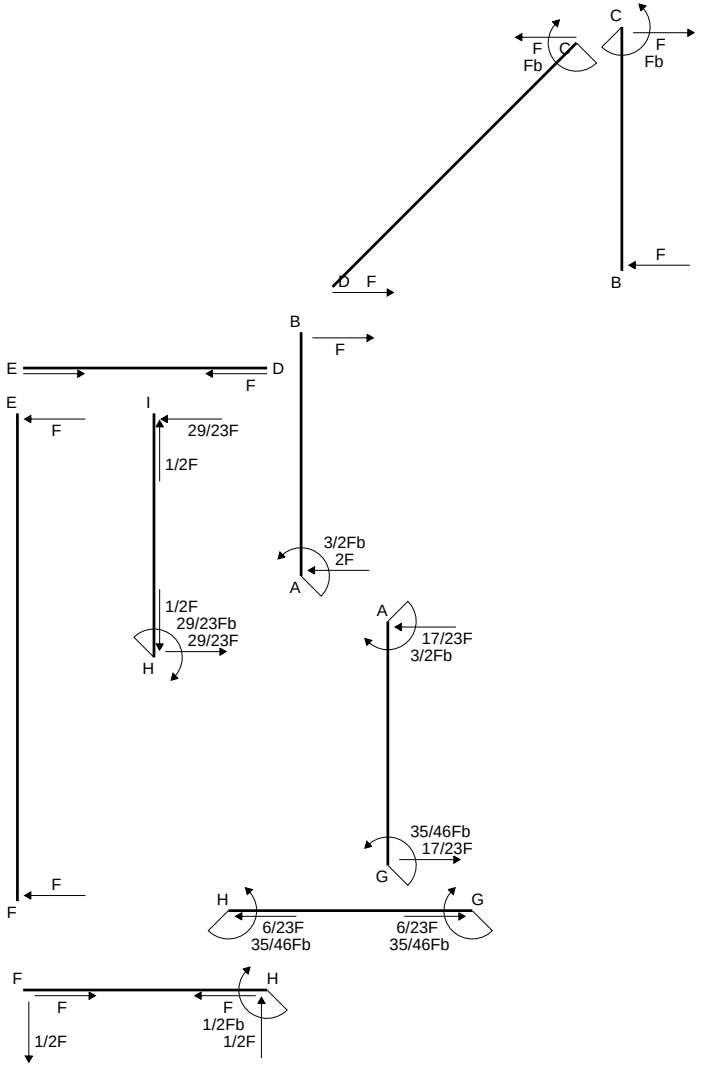
C
F
Fb
C
F
Fb
F
D
F
B
B
F
E
D
F
E
F
I
29/23F
1/2F
3/2Fb
2F
A
1/2F
29/23Fb
29/23F
H
A
17/23F
3/2Fb
35/46Fb
17/23F
G
F
F
H
G
6/23F
35/46Fb
6/23F
35/46Fb
F
H
F
F
1/2Fb
1/2F
1/2F

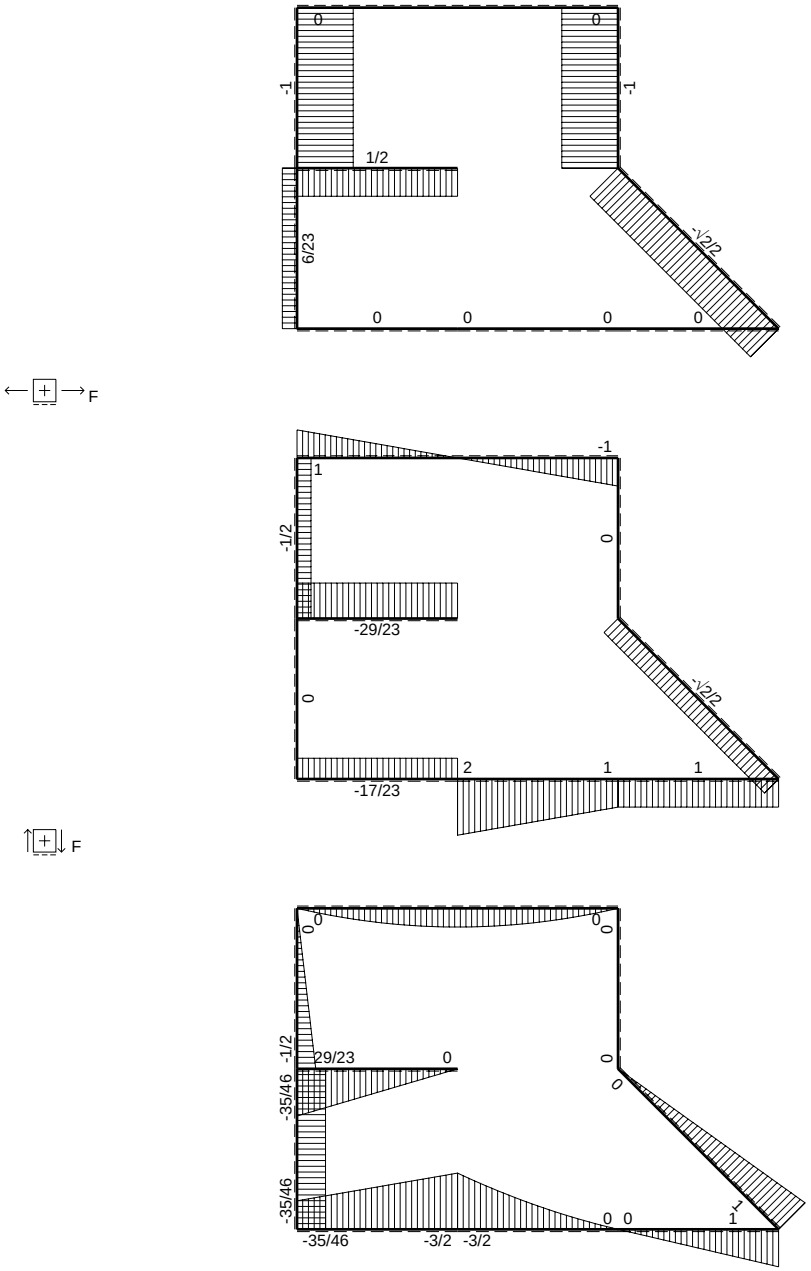
F
0
0
-1
-1
1/2
6/23
-1/2√2
0
0
0
0
F
-1
1
-1/2
0
-29/23
0
-1/2√2
2
1
1
-17/23
F
0
0
0
0
-1/2
29/23
0
0
0
-35/46
-35/46
0
0
1
-35/46
-3/2
-3/2
Fb

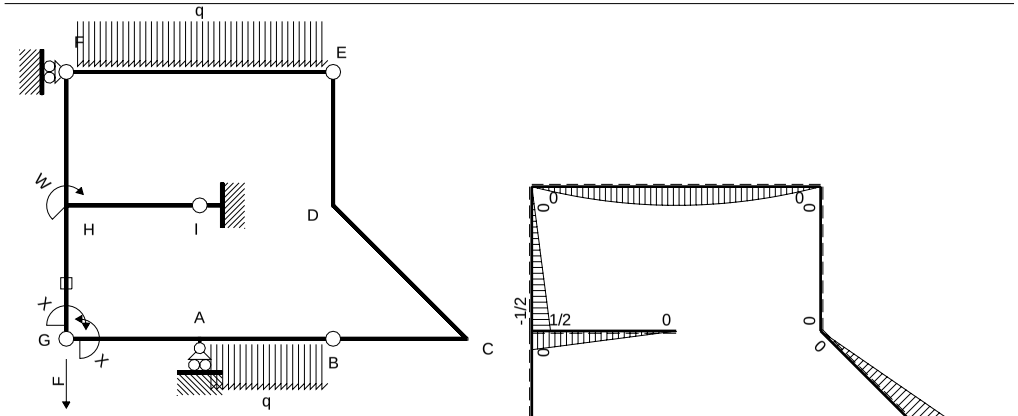

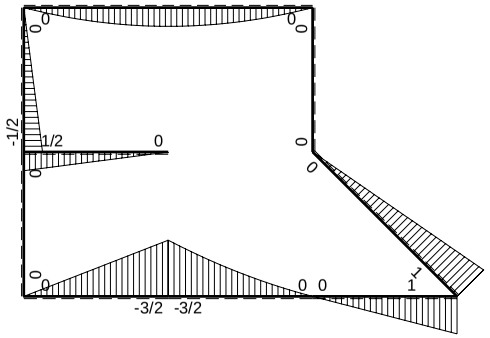

M_0 flessione da carichi assegnati

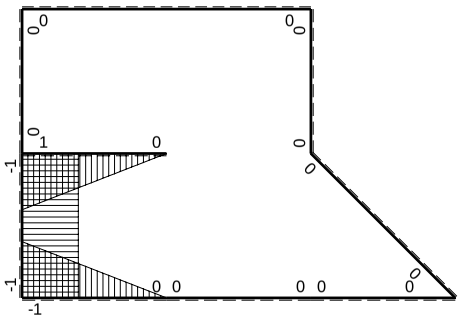

M_x flessione da iperstatica X=1

Quadro contributi PLV per iperstatica $X=W_{GA}$

→	$M_x(x)$	$M_0(x)$	M_xM_0	M_xM_x	$\int M_xM_0/EJdx$	$\int XM_xM_x/EJdx$
AB b	0	$-3/2Fb+2Fx-1/2qx^2$	0	0	0	0
BA b	0	$Fx+1/2qx^2$	0	0		
BC b	0	Fx	0	0	0	0
CB b	0	-Fb+Fx	0	0		
CD √2b	0	Fb-√2/2Fx	0	0	0	0
DE b	0	0	0	0	0	0
ED b	0	0	0	0		
EF 2b	0	$-Fx+1/2qx^2$	0	0	0	0
FE 2b	0	$Fx-1/2qx^2$	0	0		
GA b	-1+x/b	-3/2Fx	$3/2Fx-3/2Fx^2/b$	$1-2x/b+x^2/b^2$	$1/4Fb^2/EJ$	1/3Xb/EJ
AG b	x/b	3/2Fb-3/2Fx	$3/2Fx-3/2Fx^2/b$	x^2/b^2		
FH b	0	-1/2Fx	0	0	0	0
HF b	0	1/2Fb-1/2Fx	0	0		
HI b	1-x/b	1/2Fb-1/2Fx	$1/2Fb-Fx+1/2Fx^2/b$	$1-2x/b+x^2/b^2$	$1/6Fb^2/EJ$	1/3Xb/EJ
IH b	-x/b	-1/2Fx	$1/2Fx^2/b$	x^2/b^2		
HG b	-1	0	0	1	0	Xb/EJ
GH b	1	0	0	1		
HG	elongazione asta $N_{1HG}\varepsilon_{HG}L_{HG}$				$-Fb^2/EJ$	
A	molla nodo $-V_{1A}(V_{0A}+XV_{1A})/k_A$				-7/8Fb²/EJ	1/4Xb/EJ
	totali				$-35/24Fb^2/EJ$	23/12Xb/EJ
	iperstatica $X=W_{GA}$				35/46Fb	

Sviluppi di calcolo iperstatica

$L^{XX}_{GA} = \int_o^b (1 - 2\,x/b + x^2/b^2)\ 1/EJ\ dx = [\,x - x^2/b + 1/3\,x^3/b^2\,]_o^b\ 1/EJ$

$= (\,b - b + 1/3\,b\,)\ 1/EJ = 1/3\ b/EJ$

$L^{XX}_{AG} = \int_o^b (\,x^2/b^2\,)\ 1/EJ\ dx = [1/3\,x^3/b^2\,]_o^b\ 1/EJ$

$= (1/3\,b)\ 1/EJ = 1/3\ b/EJ$

$L^{XX}_{HI} = \int_o^b (1 - 2\,x/b + x^2/b^2)\ 1/EJ\ dx = [\,x - x^2/b + 1/3\,x^3/b^2\,]_o^b\ 1/EJ$

$= (\,b - b + 1/3\,b\,)\ 1/EJ = 1/3\ b/EJ$

$L^{XX}_{IH} = \int_o^b (\,x^2/b^2\,)\ 1/EJ\ dx = [1/3\,x^3/b^2\,]_o^b\ 1/EJ$

$= (1/3\,b)\ 1/EJ = 1/3\ b/EJ$

$L^{XX}_{HG} = \int_o^b (1)\ 1/EJ\ dx = [\,x\,]_o^b\ 1/EJ$

$= (\,b\,)\ 1/EJ = b/EJ$

$L^{XX}_{GH} = \int_o^b (1)\ 1/EJ\ dx = [\,x\,]_o^b\ 1/EJ$

$= (\,b\,)\ 1/EJ = b/EJ$

$L^{Xo}_{GA} = \int_o^b (3/2\,x/b - 3/2\,x^2/b^2)\ Fb\ 1/EJ\ dx = [3/4\,x^2/b - 1/2\,x^3/b^2\,]_o^b\ Fb\ 1/EJ$

$= (3/4\,b - 1/2\,b)\ Fb\ 1/EJ = 1/4\ Fb^2/EJ$

$L^{Xo}_{AG} = \int_o^b (3/2\,x/b - 3/2\,x^2/b^2)\ Fb\ 1/EJ\ dx = [3/4\,x^2/b - 1/2\,x^3/b^2\,]_o^b\ Fb\ 1/EJ$

$= (3/4\,b - 1/2\,b)\ Fb\ 1/EJ = 1/4\ Fb^2/EJ$

$L^{Xo}_{HI} = \int_o^b (1/2 - x/b + 1/2\,x^2/b^2)\ Fb\ 1/EJ\ dx = [1/2\,x - 1/2\,x^2/b + 1/6\,x^3/b^2\,]_o^b\ Fb\ 1/EJ$

$= (1/2\,b - 1/2\,b + 1/6\,b)\ Fb\ 1/EJ = 1/6\ Fb^2/EJ$

$L^{Xo}_{IH} = \int_o^b (1/2\,x^2/b^2)\ Fb\ 1/EJ\ dx = [1/6\,x^3/b^2\,]_o^b\ Fb\ 1/EJ$

$= (1/6\,b)\ Fb\ 1/EJ = 1/6\ Fb^2/EJ$

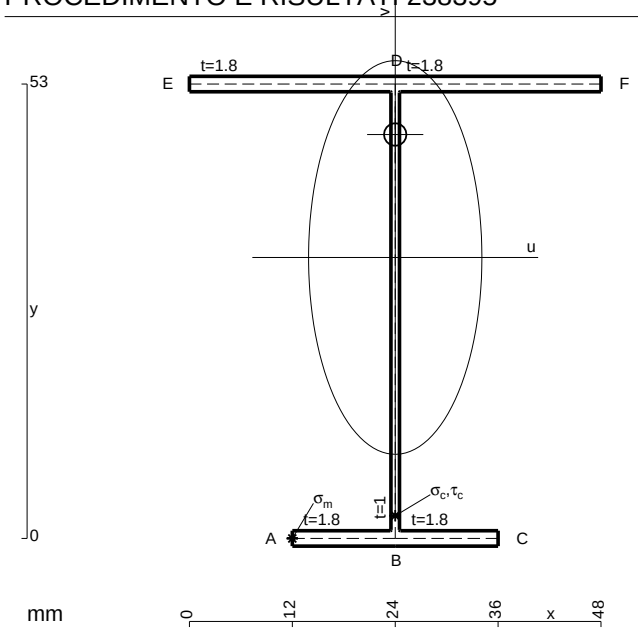

A = 182.6 mm^2
J_u = 96241. mm^4
J_v = 18662. mm^4
J_t = 157.6 mm^4
y_o = 14.34 mm
y_g = 32.77 mm
T_y = 1120. N
M_x = -638400. Nmm
x_m = 12. mm
u_m = -12. mm
v_m = -32.77 mm
$\sigma_m = -Mv/J_u$ = -217.4 N/mm^2
x_c = 24. mm
v_c = -32.77 mm
$\sigma_c = -Mv/J_u$ = -217.4 N/mm^2
$\tau_c = TS^*/tJ_u$ = 16.47 N/mm^2
$\tau_g = TS^*/tJ_u$ = 16.47 N/mm^2
t_c = 560. mm
$\sigma_o = \sqrt{\sigma^2 + 3\tau^2}$ = 219.2 N/mm^2

ESΣ05.xxxx.027

@ Adolfo Zavelani Rossi, Politecnico di Milano, vers.27.03.13 01.12.25

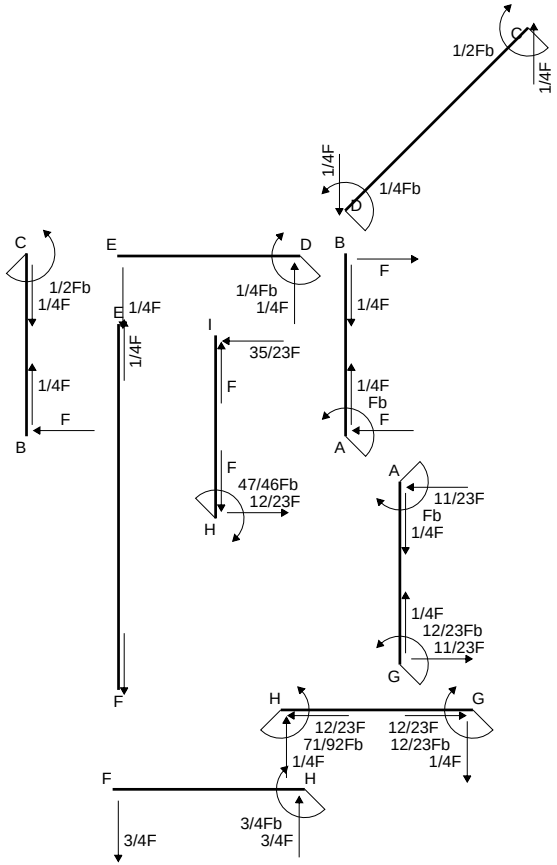
C
1/2Fb
1/4F
1/4F
F
B
E
D
1/4Fb
1/4F
E
1/4F
1/4F
I
35/23F
F
B
F
1/4F
1/4F
Fb
F
A
F
47/46Fb
12/23F
H
A
11/23F
Fb
1/4F
1/4F
12/23Fb
11/23F
G
F
H
G
12/23F
71/92Fb
1/4F
12/23F
12/23Fb
1/4F
F
H
3/4Fb
3/4F
3/4F
C
1/2Fb
1/4F
1/4F
D
1/4Fb

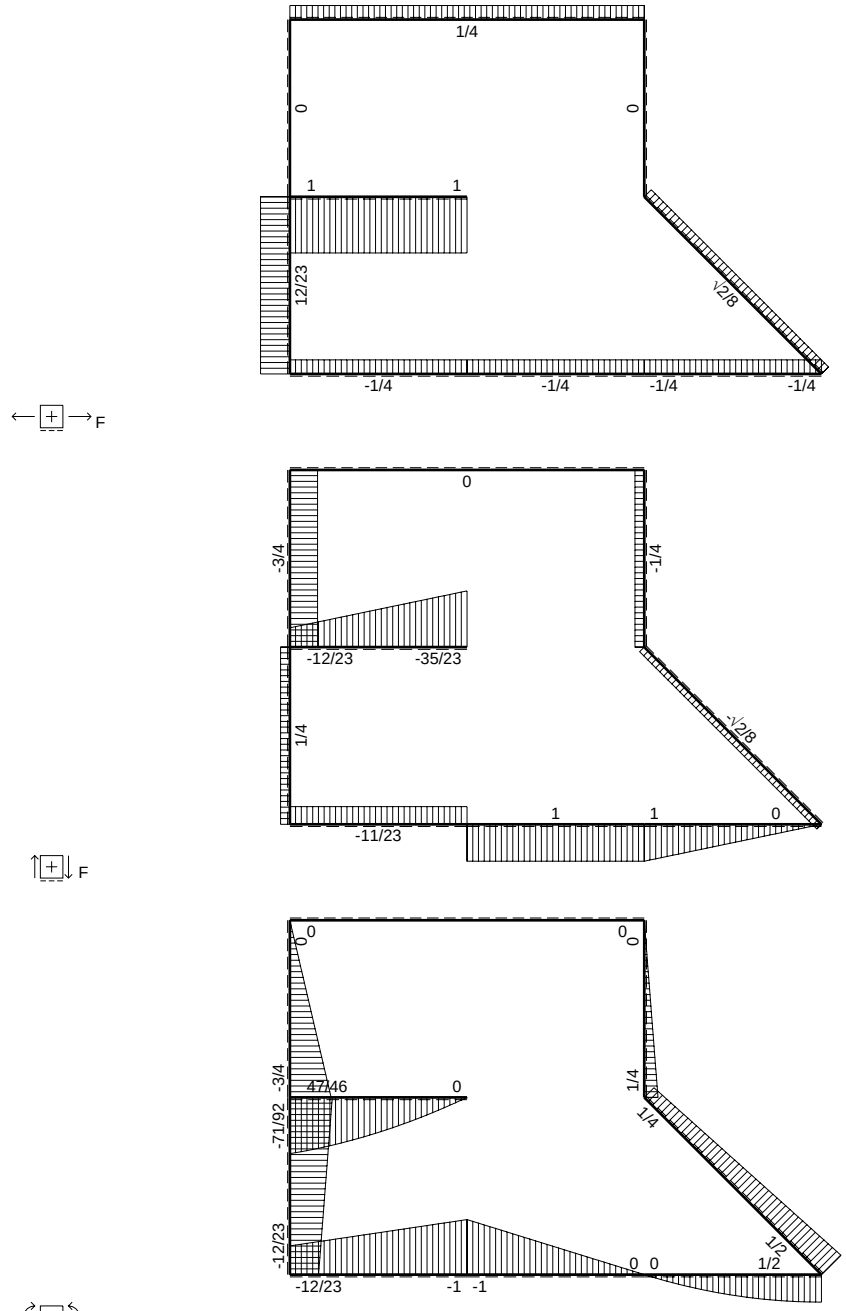
F
1/4
0
0
1
1
12/23
1/2
-1/4
-1/4
-1/4
-1/4
F
0
-3/4
-1/4
-12/23
-35/23
1/4
-1/2
1
1
0
-11/23
F
0
0
0
-3/4
47/46
0
-71/92
1/4
1/4
1/2
-12/23
0 0
1/2
-12/23
-1 -1
Fb

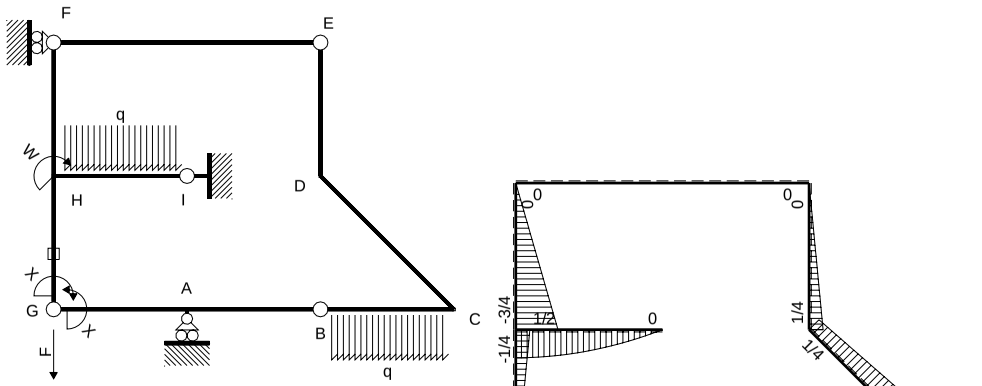

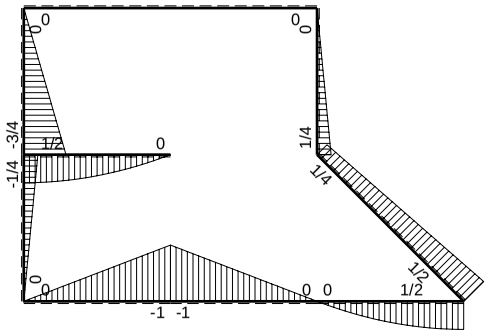

M_0 flessione da carichi assegnati

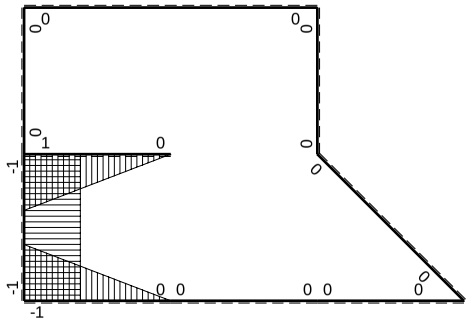

M_x flessione da iperstatica X=1

PROCEDIMENTO E RISULTATI 237245 ESΣ05.xxxx.028

@ Adolfo Zavelani Rossi, Politecnico di Milano, vers.27.03.13 01.12.25

Quadro contributi PLV per iperstatica $X=W_{GA}$

→	$M_x(x)$	$M_o(x)$	M_xM_o	M_xM_x	$\int M_xM_o/EJdx$	$\int XM_xM_x/EJdx$
AB b	0	-Fb+Fx	0	0	0	0
BA b	0	Fx	0	0		
BC b	0	$Fx-1/2qx^2$	0	0	0	0
CB b	0	$-1/2Fb+1/2qx^2$	0	0		
CD √2b	0	1/2Fb-√2/8Fx	0	0	0	0
DE b	0	1/4Fb-1/4Fx	0	0	0	0
ED b	0	-1/4Fx	0	0		
EF 2b	0	0	0	0	0	0
FE 2b	0	0	0	0		
GA b	-1+x/b	-Fx	$Fx-Fx^2/b$	$1-2x/b+x^2/b^2$	$1/6Fb^2/EJ$	1/3Xb/EJ
AG b	x/b	Fb-Fx	$Fx-Fx^2/b$	x^2/b^2		
FH b	0	-3/4Fx	0	0	0	0
HF b	0	3/4Fb-3/4Fx	0	0		
HI b	1-x/b	$1/2Fb-1/2qx^2$	$1/2Fb-1/2Fx-1/2Fx^2/b+1/2qx^3/b$	$1-2x/b+x^2/b^2$	$5/24Fb^2/EJ$	1/3Xb/EJ
IH b	-x/b	$-Fx+1/2qx^2$	$Fx^2/b-1/2qx^3/b$	x^2/b^2		
HG b	-1	-1/4Fb+1/4Fx	1/4Fb-1/4Fx	1	$1/8Fb^2/EJ$	Xb/EJ
GH b	1	1/4Fx	1/4Fx	1		
HG	elongazione asta $N_{1HG}\varepsilon_{HG}L_{HG}$				$-Fb^2/EJ$	
A	molla nodo $-V_{1A}(V_{oA}+XV_{1A})/k_A$				$-1/2Fb^2/EJ$	1/4Xb/EJ
	totali				$-Fb^2/EJ$	23/12Xb/EJ
	iperstatica $X=W_{GA}$				12/23Fb	

PROCEDIMENTO E RISULTATI 237245 ESΣ05.xxxx.028

Sviluppi di calcolo iperstatica

@ Adolfo Zavelani Rossi, Politecnico di Milano, vers.27.03.13 01.12.25

$L^{XX}_{GA} = \int_o^b (1 - 2\,x/b + x^2/b^2)\ 1/EJ\ dx = [\,x - x^2/b + 1/3\,x^3/b^2\,]_o^b\ 1/EJ$

$= (\,b - b + 1/3\,b\,)\ 1/EJ = 1/3\ b/EJ$

$L^{XX}_{AG} = \int_o^b (\,x^2/b^2\,)\ 1/EJ\ dx = [1/3\,x^3/b^2\,]_o^b\ 1/EJ$

$= (1/3\,b\,)\ 1/EJ = 1/3\ b/EJ$

$L^{XX}_{HI} = \int_o^b (1 - 2\,x/b + x^2/b^2)\ 1/EJ\ dx = [\,x - x^2/b + 1/3\,x^3/b^2\,]_o^b\ 1/EJ$

$= (\,b - b + 1/3\,b\,)\ 1/EJ = 1/3\ b/EJ$

$L^{XX}_{IH} = \int_o^b (\,x^2/b^2\,)\ 1/EJ\ dx = [1/3\,x^3/b^2\,]_o^b\ 1/EJ$

$= (1/3\,b\,)\ 1/EJ = 1/3\ b/EJ$

$L^{XX}_{HG} = \int_o^b (1)\ 1/EJ\ dx = [\,x\,]_o^b\ 1/EJ$

$= (\,b\,)\ 1/EJ = b/EJ$

$L^{XX}_{GH} = \int_o^b (1)\ 1/EJ\ dx = [\,x\,]_o^b\ 1/EJ$

$= (\,b\,)\ 1/EJ = b/EJ$

$L^{Xo}_{GA} = \int_o^b (\,x/b - x^2/b^2\,)\ Fb\ 1/EJ\ dx = [1/2\,x^2/b - 1/3\,x^3/b^2\,]_o^b\ Fb\ 1/EJ$

$= (1/2\,b - 1/3\,b\,)\ Fb\ 1/EJ = 1/6\ Fb^2/EJ$

$L^{Xo}_{AG} = \int_o^b (\,x/b - x^2/b^2\,)\ Fb\ 1/EJ\ dx = [1/2\,x^2/b - 1/3\,x^3/b^2\,]_o^b\ Fb\ 1/EJ$

$= (1/2\,b - 1/3\,b\,)\ Fb\ 1/EJ = 1/6\ Fb^2/EJ$

$L^{Xo}_{HI} = \int_o^b (1/2 - 1/2\,x/b - 1/2\,x^2/b^2 + 1/2\,x^3/b^3\,)\ Fb\ 1/EJ\ dx$

$= [1/2\,x - 1/4\,x^2/b - 1/6\,x^3/b^2 + 1/8\,x^4/b^3\,]_o^b\ Fb\ 1/EJ$

$= (1/2\,b - 1/4\,b - 1/6\,b + 1/8\,b\,)\ Fb\ 1/EJ = 5/24\ Fb^2/EJ$

$L^{Xo}_{IH} = \int_o^b (\,x^2/b^2 - 1/2\,x^3/b^3\,)\ Fb\ 1/EJ\ dx = [1/3\,x^3/b^2 - 1/8\,x^4/b^3\,]_o^b\ Fb\ 1/EJ$

$= (1/3\,b - 1/8\,b\,)\ Fb\ 1/EJ = 5/24\ Fb^2/EJ$

$L^{Xo}_{HG} = \int_o^b (1/4 - 1/4\,x/b\,)\ Fb\ 1/EJ\ dx - 1\ \ (-1)\ \ (-1)\ \ Fb^2/EJ$

$= [1/4\,x - 1/8\,x^2/b\,]_o^b\ Fb\ 1/EJ\ - 1\ \ (-1)\ \ (-1)\ \ Fb^2/EJ$

$= (1/4\,b - 1/8\,b\,)\ Fb\ 1/EJ\ - 1\ \ (-1)\ \ (-1)\ \ Fb^2/EJ = -7/8\ \ Fb^2/EJ$

$L^{Xo}_{GH} = \int_o^b (1/4\,x/b\,)\ Fb\ 1/EJ\ dx - 1\ \ (-1)\ \ (-1)\ \ Fb^2/EJ = [1/8\,x^2/b\,]_o^b\ Fb\ 1/EJ\ - 1\ \ (-1)\ \ (-1)\ \ Fb^2/EJ$

$= (1/8\,b\,)\ Fb\ 1/EJ\ - 1\ \ (-1)\ \ (-1)\ \ Fb^2/EJ = -7/8\ \ Fb^2/EJ$

PROCEDIMENTO E RISULTATI 237245 ESΣ05.xxxx.028

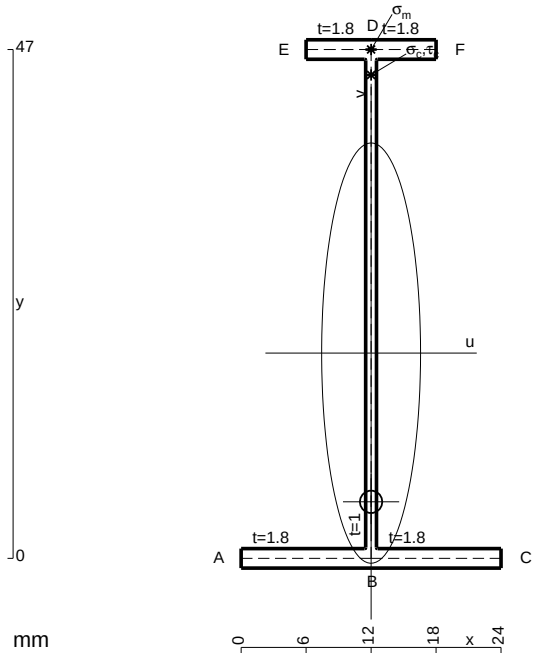

A = 111.8 mm^2
J_u = 42133. mm^4
J_v = 2333. mm^4
J_t = 85.65 mm^4
y_o = -13.74 mm
y_g = 18.96 mm
N = -120. N
T_y = 480. N
M_x = -345600. Nmm
x_m = 12. mm
y_m = 47. mm
v_m = 28.04 mm
$\sigma_m = N/A - Mv/J_u$ = 228.9 N/mm^2
y_c = 2. mm
u_c = -12. mm
v_c = -16.96 mm
$\sigma_c = N/A - Mv/J_u$ = 228.9 N/mm^2
$\tau_c = TS^*/tJ_u$ = 6.9 N/mm^2
$\tau_g = TS^*/tJ_u$ = 6.9 N/mm^2
t_c = 480. mm
$\sigma_o = \sqrt{\sigma^2 + 3\tau^2}$ = 229.2 N/mm^2

@ Adolfo Zavelani Rossi, Politecnico di Milano, vers.27.03.13 01.12.25

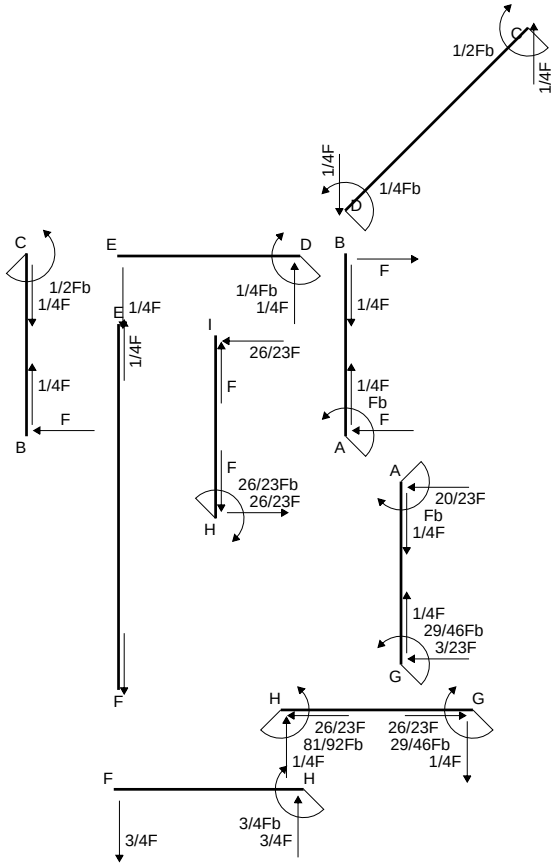
C
1/2Fb
1/4F
1/4F
F
B
E
D
1/4Fb
1/4F
E
1/4F
1/4F
I
26/23F
F
B
F
1/4F
Fb
F
A
F
26/23Fb
26/23F
H
A
20/23F
Fb
1/4F
1/4F
29/46Fb
3/23F
G
F
H
G
26/23F
81/92Fb
1/4F
H
26/23F
29/46Fb
1/4F
F
3/4F
3/4Fb
3/4F
C
1/2Fb
1/4F
1/4F
1/4Fb
D

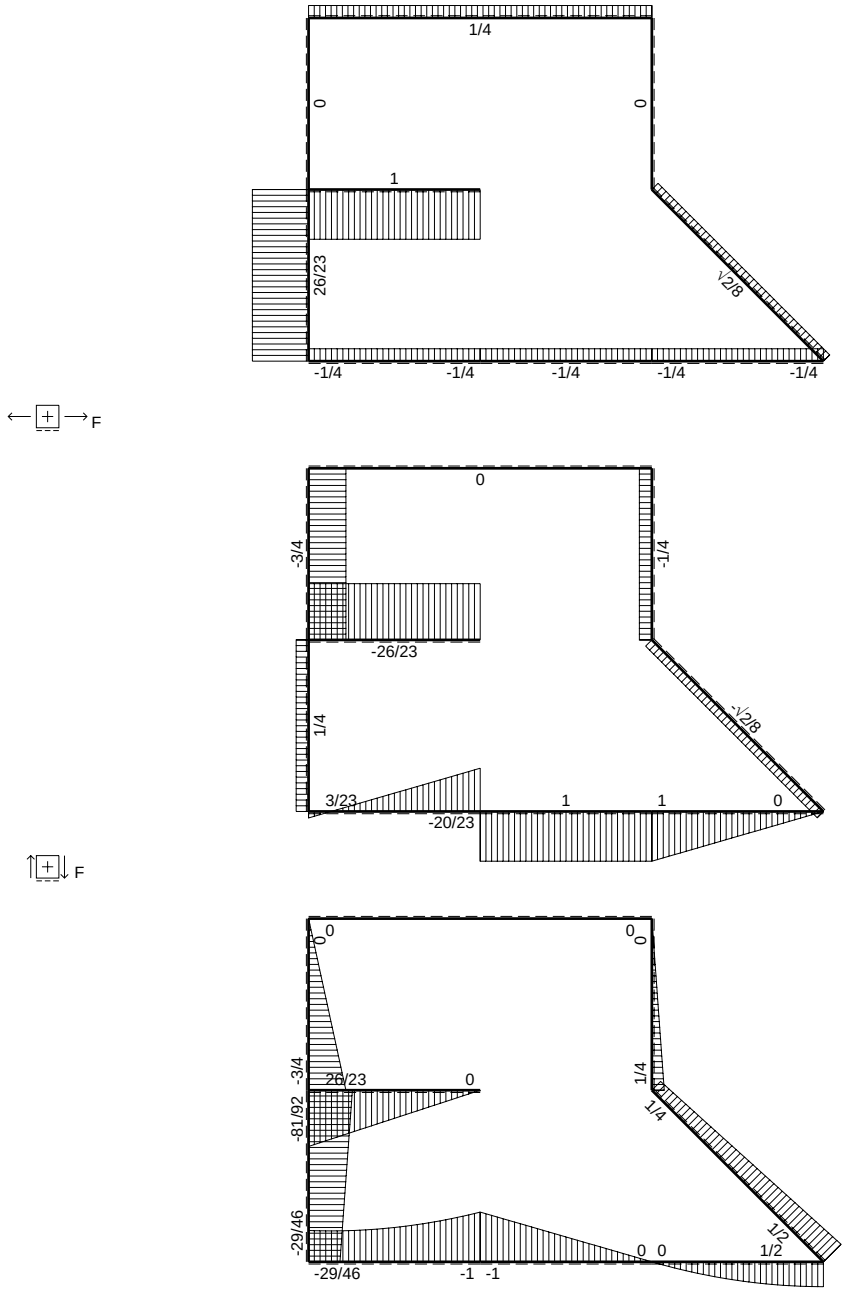
1/4
0
0
1
26/23
-1/28
-1/4
-1/4
-1/4
-1/4
-1/4
F
0
-3/4
-1/4
-26/23
1/4
-1/28
3/23
1
1
0
-20/23
F
0
0
0
0
-3/4
26/23
0
1/4
-81/92
1/4
-29/46
1/2
0 0
1/2
-29/46
-1 -1
Fb

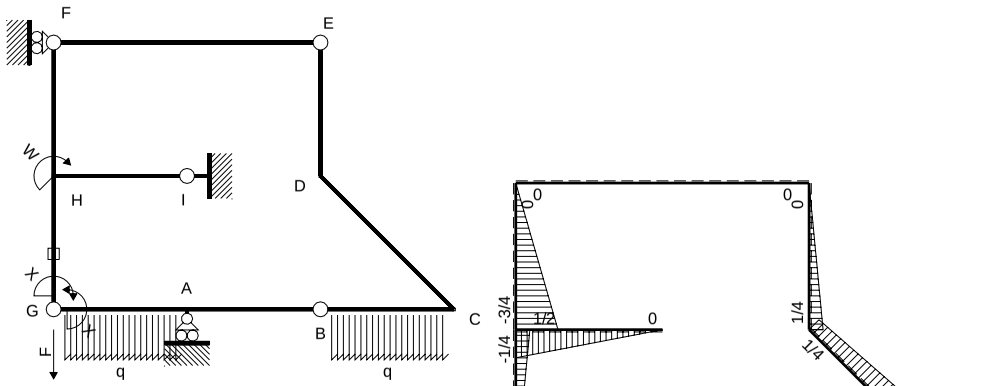

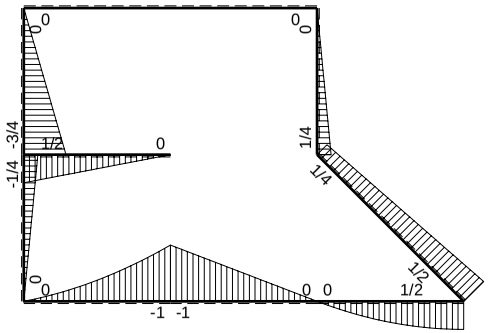

M_0 flessione da carichi assegnati

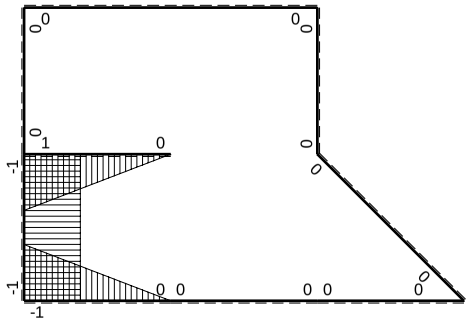

M_x flessione da iperstatica X=1

Quadro contributi PLV per iperstatica $X=W_{GA}$

→	$M_x(x)$	$M_0(x)$	M_xM_0	M_xM_x	$\int M_xM_0/EJdx$	$\int XM_xM_x/EJdx$
AB b	0	-Fb+Fx	0	0	0	0
BA b	0	Fx	0	0		
BC b	0	$Fx-1/2qx^2$	0	0	0	0
CB b	0	$-1/2Fb+1/2qx^2$	0	0		
CD √2b	0	1/2Fb-√2/8Fx	0	0	0	0
DE b	0	1/4Fb-1/4Fx	0	0	0	0
ED b	0	-1/4Fx	0	0		
EF 2b	0	0	0	0	0	0
FE 2b	0	0	0	0		
GA b	-1+x/b	$-1/2Fx-1/2qx^2$	$1/2Fx-1/2qx^3/b$	$1-2x/b+x^2/b^2$	$1/8Fb^2/EJ$	1/3Xb/EJ
AG b	x/b	$Fb-3/2Fx+1/2qx^2$	$Fx-3/2Fx^2/b+1/2qx^3/b$	x^2/b^2		
FH b	0	-3/4Fx	0	0	0	0
HF b	0	3/4Fb-3/4Fx	0	0		
HI b	1-x/b	1/2Fb-1/2Fx	$1/2Fb-Fx+1/2Fx^2/b$	$1-2x/b+x^2/b^2$	$1/6Fb^2/EJ$	1/3Xb/EJ
IH b	-x/b	-1/2Fx	$1/2Fx^2/b$	x^2/b^2		
HG b	-1	-1/4Fb+1/4Fx	1/4Fb-1/4Fx	1	$1/8Fb^2/EJ$	Xb/EJ
GH b	1	1/4Fx	1/4Fx	1		
HG	elongazione asta $N_{1HG}\varepsilon_{HG}L_{HG}$				$-Fb^2/EJ$	
A	molla nodo $-V_{1A}(V_{0A}+XV_{1A})/k_A$				$-5/8Fb^2/EJ$	1/4Xb/EJ
	totali				$-29/24Fb^2/EJ$	23/12Xb/EJ
	iperstatica $X=W_{GA}$				29/46Fb	

Sviluppi di calcolo iperstatica

$L^{XX}_{GA} = \int_o^b (1 - 2\,x/b + x^2/b^2)\ 1/EJ\ dx = [\,x - x^2/b + 1/3\,x^3/b^2\,]_o^b\ 1/EJ$

$= (\,b - b + 1/3\,b\,)\ 1/EJ = 1/3\ b/EJ$

$L^{XX}_{AG} = \int_o^b (\,x^2/b^2\,)\ 1/EJ\ dx = [1/3\,x^3/b^2\,]_o^b\ 1/EJ$

$= (1/3\,b)\ 1/EJ = 1/3\ b/EJ$

$L^{XX}_{HI} = \int_o^b (1 - 2\,x/b + x^2/b^2)\ 1/EJ\ dx = [\,x - x^2/b + 1/3\,x^3/b^2\,]_o^b\ 1/EJ$

$= (\,b - b + 1/3\,b\,)\ 1/EJ = 1/3\ b/EJ$

$L^{XX}_{IH} = \int_o^b (\,x^2/b^2\,)\ 1/EJ\ dx = [1/3\,x^3/b^2\,]_o^b\ 1/EJ$

$= (1/3\,b)\ 1/EJ = 1/3\ b/EJ$

$L^{XX}_{HG} = \int_o^b (1)\ 1/EJ\ dx = [\,x\,]_o^b\ 1/EJ$

$= (\,b\,)\ 1/EJ = b/EJ$

$L^{XX}_{GH} = \int_o^b (1)\ 1/EJ\ dx = [\,x\,]_o^b\ 1/EJ$

$= (\,b\,)\ 1/EJ = b/EJ$

$L^{Xo}_{GA} = \int_o^b (1/2\,x/b - 1/2\,x^3/b^3)\ Fb\ 1/EJ\ dx = [1/4\,x^2/b - 1/8\,x^4/b^3\,]_o^b\ Fb\ 1/EJ$

$= (1/4\,b - 1/8\,b)\ Fb\ 1/EJ = 1/8\ Fb^2/EJ$

$L^{Xo}_{AG} = \int_o^b (\,x/b - 3/2\,x^2/b^2 + 1/2\,x^3/b^3)\ Fb\ 1/EJ\ dx = [1/2\,x^2/b - 1/2\,x^3/b^2 + 1/8\,x^4/b^3\,]_o^b\ Fb\ 1/EJ$

$= (1/2\,b - 1/2\,b + 1/8\,b)\ Fb\ 1/EJ = 1/8\ Fb^2/EJ$

$L^{Xo}_{HI} = \int_o^b (1/2 - x/b + 1/2\,x^2/b^2)\ Fb\ 1/EJ\ dx = [1/2\,x - 1/2\,x^2/b + 1/6\,x^3/b^2\,]_o^b\ Fb\ 1/EJ$

$= (1/2\,b - 1/2\,b + 1/6\,b)\ Fb\ 1/EJ = 1/6\ Fb^2/EJ$

$L^{Xo}_{IH} = \int_o^b (1/2\,x^2/b^2)\ Fb\ 1/EJ\ dx = [1/6\,x^3/b^2\,]_o^b\ Fb\ 1/EJ$

$= (1/6\,b)\ Fb\ 1/EJ = 1/6\ Fb^2/EJ$

$L^{Xo}_{HG} = \int_o^b (1/4 - 1/4\,x/b)\ Fb\ 1/EJ\ dx - 1\ \ (-1)\ \ (-1)\ \ Fb^2/EJ$

$= [1/4\,x - 1/8\,x^2/b\,]_o^b\ Fb\ 1/EJ\ - 1\ \ (-1)\ \ (-1)\ \ Fb^2/EJ$

$= (1/4\,b - 1/8\,b)\ Fb\ 1/EJ\ - 1\ \ (-1)\ \ (-1)\ \ Fb^2/EJ = -7/8\ \ Fb^2/EJ$

$L^{Xo}_{GH} = \int_o^b (1/4\,x/b)\ Fb\ 1/EJ\ dx - 1\ \ (-1)\ \ (-1)\ \ Fb^2/EJ = [1/8\,x^2/b\,]_o^b\ Fb\ 1/EJ\ - 1\ \ (-1)\ \ (-1)\ \ Fb^2/EJ$

$= (1/8\,b)\ Fb\ 1/EJ\ - 1\ \ (-1)\ \ (-1)\ \ Fb^2/EJ = -7/8\ \ Fb^2/EJ$

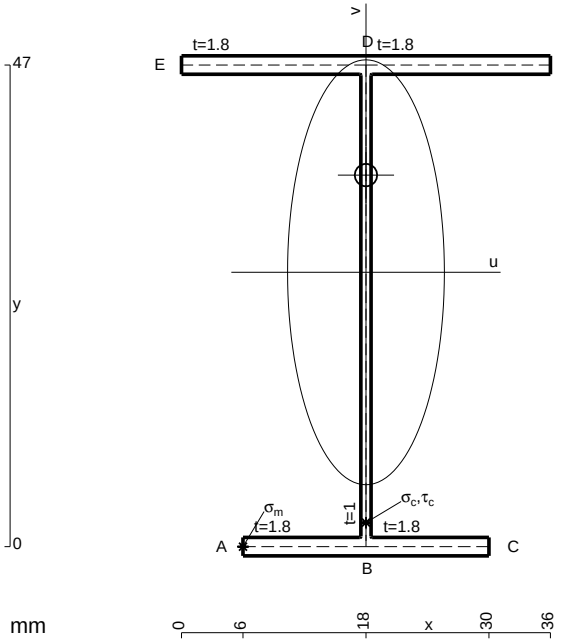

A = 155. mm^2
J_u = 66633. mm^4
J_v = 9072. mm^4
J_t = 132.3 mm^4
y_o = 9.482 mm
y_g = 26.77 mm
N = -195. N
T_y = 780. N
M_x = -592800. Nmm
x_m = 6. mm
u_m = -12. mm
v_m = -26.77 mm
$\sigma_m = N/A - Mv/J_u$ = -239.5 N/mm^2
x_c = 18. mm
v_c = -26.77 mm
$\sigma_c = N/A - Mv/J_u$ = -239.5 N/mm^2
$\tau_c = TS^*/tJ_u$ = 13.54 N/mm^2
$\tau_g = TS^*/tJ_u$ = 13.54 N/mm^2
t_c = 780. mm
$\sigma_o = \sqrt{\sigma^2 + 3\tau^2}$ = 240.6 N/mm^2

ESΣ05.xxxx.029

@ Adolfo Zavelani Rossi, Politecnico di Milano, vers.27.03.13 01.12.25

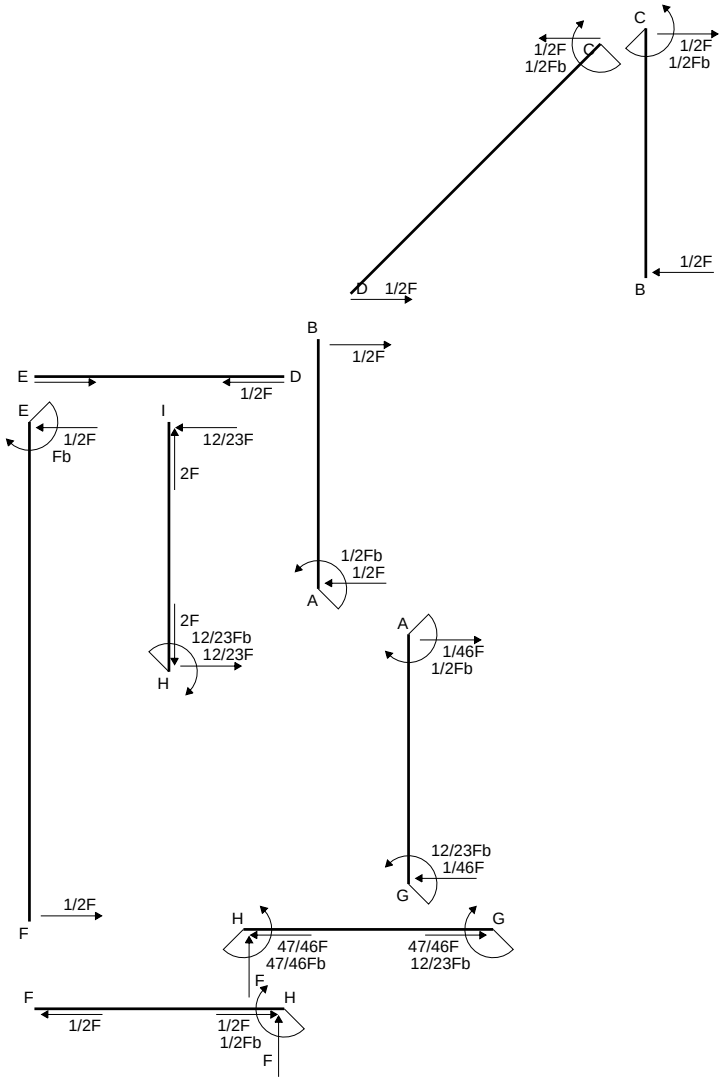
C
1/2F
1/2Fb
C
1/2F
1/2Fb
1/2F
D 1/2F
B
B
1/2F
E
D
1/2F
E
1/2F
Fb
I
12/23F
2F
1/2Fb
1/2F
A
2F
12/23Fb
12/23F
H
A
1/46F
1/2Fb
12/23Fb
1/46F
G
1/2F
F
H
G
47/46F
47/46Fb
47/46F
12/23Fb
F
F
H
1/2F
1/2F
1/2Fb
F

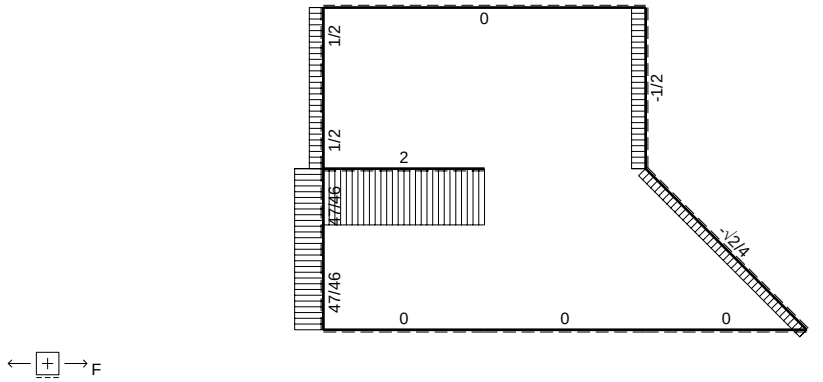
0
1/2
-1/2
1/2
2
47/46
-√2/4
47/46
0
0
0
F

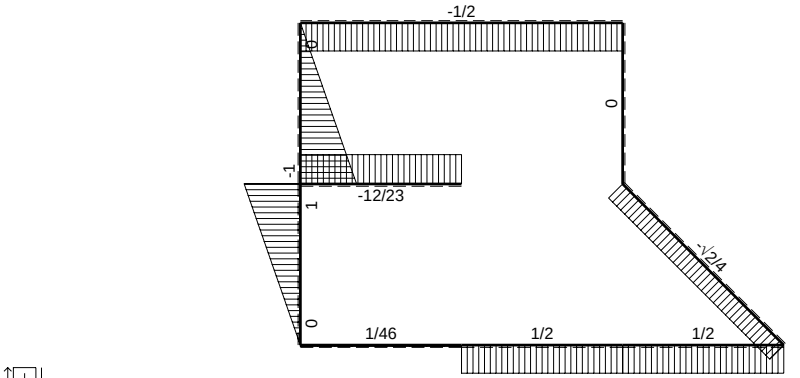
-1/2
0
0
-1
-12/23
1
-√2/4
0
1/46
1/2
1/2
F

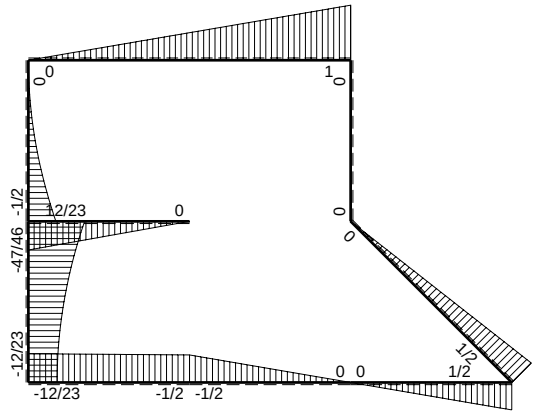
0
0
1
0
-1/2
12/23
0
0
0
-47/46
-12/23
1/2
0 0
1/2
-12/23
-1/2 -1/2
Fb

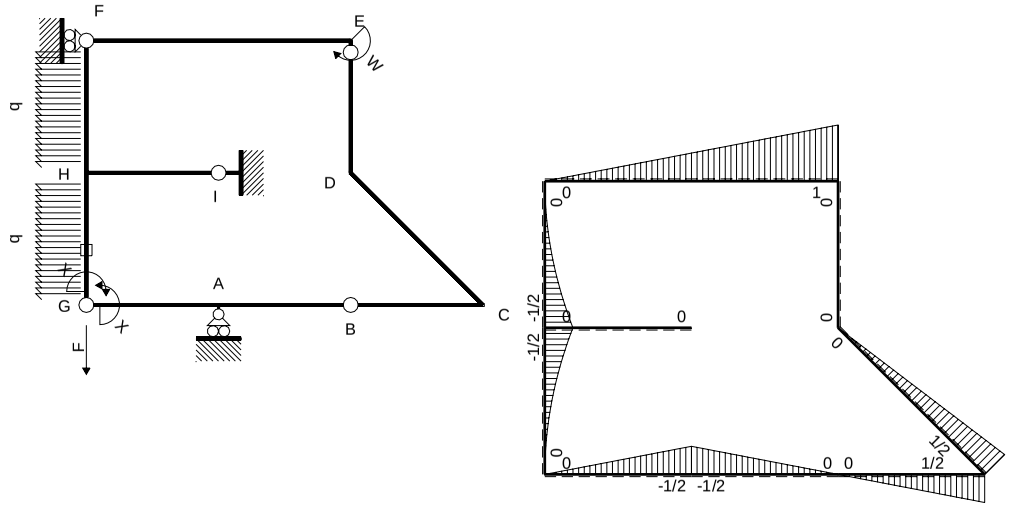

M_0 flessione da carichi assegnati

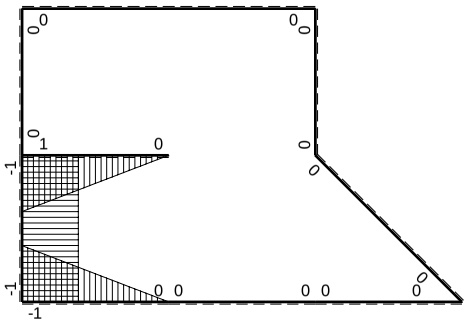

M_x flessione da iperstatica X=1

Quadro contributi PLV per iperstatica $X=W_{GA}$

→	$M_x(x)$	$M_o(x)$	M_xM_o	M_xM_x	$\int M_xM_o/EJdx$	$\int XM_xM_x/EJdx$
AB b	0	-1/2Fb+1/2Fx	0	0	0	0
BA b	0	1/2Fx	0	0		
BC b	0	1/2Fx	0	0	0	0
CB b	0	-1/2Fb+1/2Fx	0	0		
CD √2b	0	1/2Fb-√2/4Fx	0	0	0	0
DE b	0	0	0	0	0	0
ED b	0	0	0	0		
EF 2b	0	Fb-1/2Fx	0	0	0	0
FE 2b	0	-1/2Fx	0	0		
GA b	-1+x/b	-1/2Fx	$1/2Fx-1/2Fx^2/b$	$1-2x/b+x^2/b^2$	$1/12Fb^2/EJ$	$1/3Xb/EJ$
AG b	x/b	1/2Fb-1/2Fx	$1/2Fx-1/2Fx^2/b$	x^2/b^2		
FH b	0	$-1/2qx^2$	0	0	0	0
HF b	0	$1/2Fb-Fx+1/2qx^2$	0	0		
HI b	1-x/b	0	0	$1-2x/b+x^2/b^2$	0	$1/3Xb/EJ$
IH b	-x/b	0	0	x^2/b^2		
HG b	-1	$-1/2Fb+Fx-1/2qx^2$	$1/2Fb-Fx+1/2Fx^2/b$	1	$1/6Fb^2/EJ$	Xb/EJ
GH b	1	$1/2qx^2$	$1/2Fx^2/b$	1		
HG	elongazione asta $N_{1HG}\varepsilon_{HG}L_{HG}$				$-Fb^2/EJ$	
A	molla nodo $-V_{1A}(V_{0A}+XV_{1A})/k_A$				$-1/4Fb^2/EJ$	$1/4Xb/EJ$
	totali				$-Fb^2/EJ$	$23/12Xb/EJ$
	iperstatica $X=W_{GA}$				$12/23Fb$	

Sviluppi di calcolo iperstatica

$L^{XX}_{GA} = \int_o^b (1 - 2\,x/b + x^2/b^2)\ 1/EJ\ dx = [\,x - x^2/b + 1/3\,x^3/b^2\,]_o^b\ 1/EJ$

$= (\,b - b + 1/3\,b\,)\ 1/EJ\ = 1/3\ b/EJ$

$L^{XX}_{AG} = \int_o^b (\,x^2/b^2\,)\ 1/EJ\ dx = [1/3\,x^3/b^2\,]_o^b\ 1/EJ$

$= (1/3\,b\,)\ 1/EJ\ = 1/3\ b/EJ$

$L^{XX}_{HI} = \int_o^b (1 - 2\,x/b + x^2/b^2)\ 1/EJ\ dx = [\,x - x^2/b + 1/3\,x^3/b^2\,]_o^b\ 1/EJ$

$= (\,b - b + 1/3\,b\,)\ 1/EJ\ = 1/3\ b/EJ$

$L^{XX}_{IH} = \int_o^b (\,x^2/b^2\,)\ 1/EJ\ dx = [1/3\,x^3/b^2\,]_o^b\ 1/EJ$

$= (1/3\,b\,)\ 1/EJ\ = 1/3\ b/EJ$

$L^{XX}_{HG} = \int_o^b (1)\ 1/EJ\ dx = [\,x\,]_o^b\ 1/EJ$

$= (\,b\,)\ 1/EJ\ =\ b/EJ$

$L^{XX}_{GH} = \int_o^b (1)\ 1/EJ\ dx = [\,x\,]_o^b\ 1/EJ$

$= (\,b\,)\ 1/EJ\ =\ b/EJ$

$L^{Xo}_{GA} = \int_o^b (1/2\,x/b - 1/2\,x^2/b^2)\ Fb\ 1/EJ\ dx = [1/4\,x^2/b - 1/6\,x^3/b^2\,]_o^b\ Fb\ 1/EJ$

$= (1/4\,b - 1/6\,b\,)\ Fb\ 1/EJ\ = 1/12\ Fb^2/EJ$

$L^{Xo}_{AG} = \int_o^b (1/2\,x/b - 1/2\,x^2/b^2)\ Fb\ 1/EJ\ dx = [1/4\,x^2/b - 1/6\,x^3/b^2\,]_o^b\ Fb\ 1/EJ$

$= (1/4\,b - 1/6\,b\,)\ Fb\ 1/EJ\ = 1/12\ Fb^2/EJ$

$L^{Xo}_{HG} = \int_o^b (1/2 - x/b + 1/2\,x^2/b^2\,)\ Fb\ 1/EJ\ dx - 1\ \ (-1)\ \ (-1)\ \ Fb^2/EJ$

$= [1/2\,x - 1/2\,x^2/b + 1/6\,x^3/b^2\,]_o^b\ Fb\ 1/EJ\ -\ 1\ \ (-1)\ \ (-1)\ \ Fb^2/EJ$

$= (1/2\,b - 1/2\,b + 1/6\,b\,)\ Fb\ 1/EJ\ -\ 1\ \ (-1)\ \ (-1)\ \ Fb^2/EJ = -5/6\ \ Fb^2/EJ$

$L^{Xo}_{GH} = \int_o^b (1/2\,x^2/b^2\,)\ Fb\ 1/EJ\ dx - 1\ \ (-1)\ \ (-1)\ \ Fb^2/EJ = [1/6\,x^3/b^2\,]_o^b\ Fb\ 1/EJ\ -\ 1\ \ (-1)\ \ (-1)\ \ Fb^2/EJ$

$= (1/6\,b\,)\ Fb\ 1/EJ\ -\ 1\ \ (-1)\ \ (-1)\ \ Fb^2/EJ = -5/6\ \ Fb^2/EJ$

PROCEDIMENTO E RISULTATI 211617 ESΣ05.xxxx.030

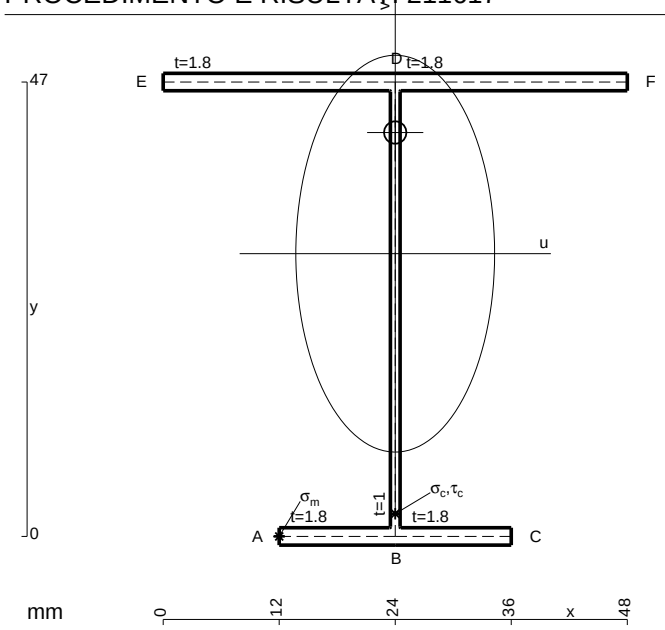

A = 176.6 mm^2
J_u = 74388. mm^4
J_v = 18662. mm^4
J_t = 155.6 mm^4
y_o = 12.53 mm
y_g = 29.25 mm
T_y = -635. N
M_x = 508000. Nmm
x_m = 12. mm
u_m = -12. mm
v_m = -29.25 mm
$\sigma_m = -Mv/J_u$ = 199.7 N/mm^2
x_c = 24. mm
v_c = -29.25 mm
$\sigma_c = -Mv/J_u$ = 199.7 N/mm^2
$\tau_c = TS^*/tJ_u$ = 10.79 N/mm^2
$\tau_g = TS^*/tJ_u$ = 10.79 N/mm^2
t_c = 1270. mm
$\sigma_o = \sqrt{\sigma^2 + 3\tau^2}$ = 200.6 N/mm^2

@ Adolfo Zavelani Rossi, Politecnico di Milano, vers.27.03.13 01.12.25

ESΣ05.xxxx.030

@ Adolfo Zavelani Rossi, Politecnico di Milano, vers.27.03.13 01.12.25

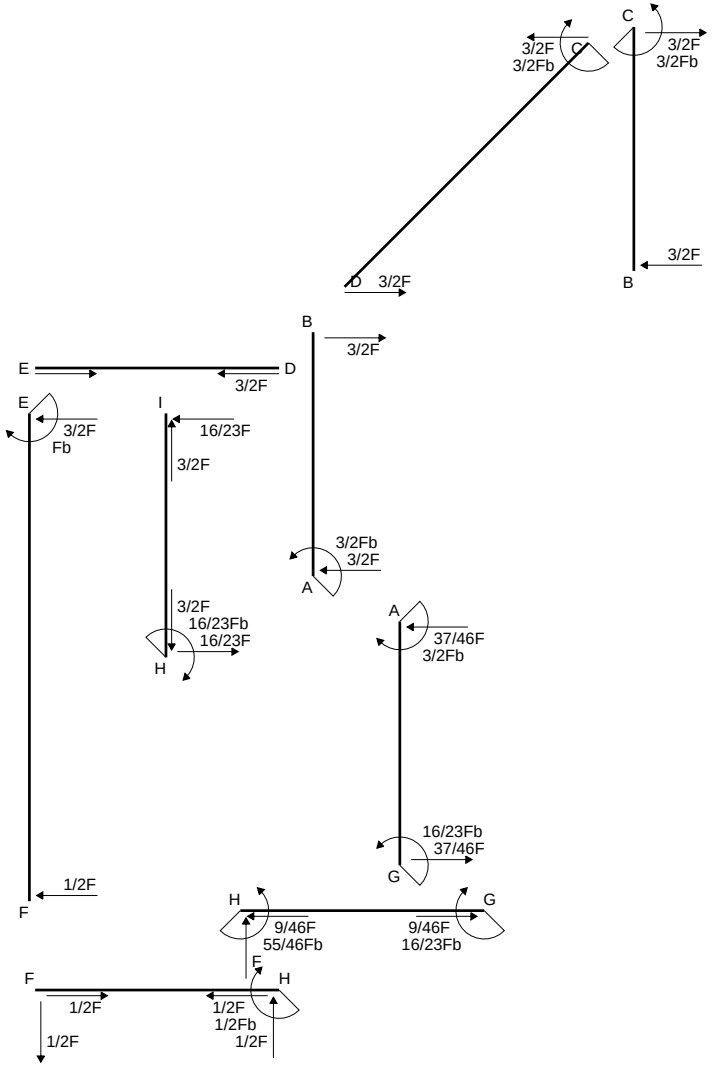
C
3/2F
3/2Fb
C
3/2F
3/2Fb
3/2F
D
3/2F
B
B
3/2F
E
D
3/2F
E
3/2F
Fb
I
16/23F
3/2F
3/2Fb
3/2F
A
3/2F
16/23Fb
16/23F
H
A
37/46F
3/2Fb
16/23Fb
37/46F
G
1/2F
F
H
G
9/46F
55/46Fb
9/46F
16/23Fb
F
H
F
1/2F
1/2F
1/2Fb
1/2F
1/2F

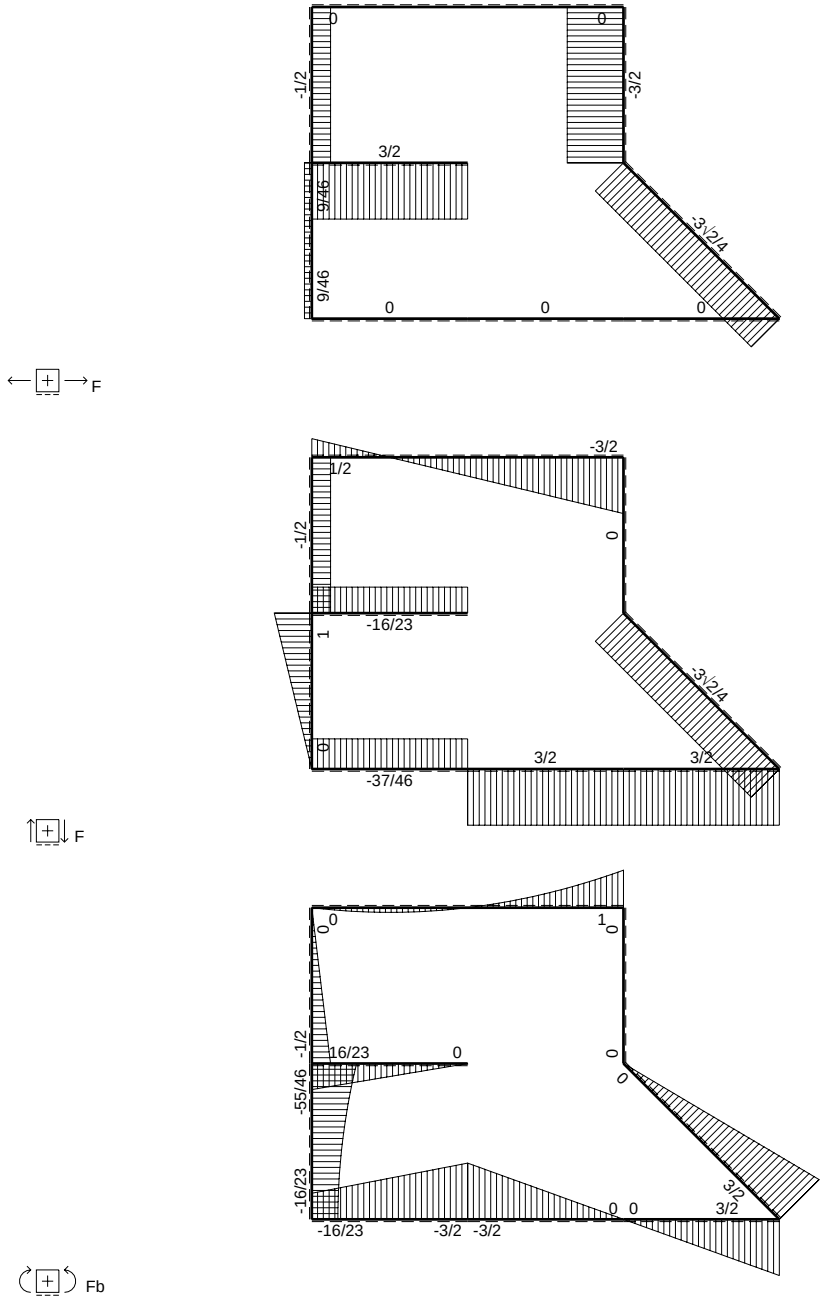
0
0
-1/2
-3/2
3/2
9/46
-3/2/4
9/46
0
0
0
F
-3/2
1/2
-1/2
0
-16/23
1
-3/2/4
0
3/2
3/2
-37/46
F
0
0
1
0
-1/2
16/23
0
0
0
-55/46
-16/23
0
0
3/2
-16/23
-3/2
-3/2
Fb

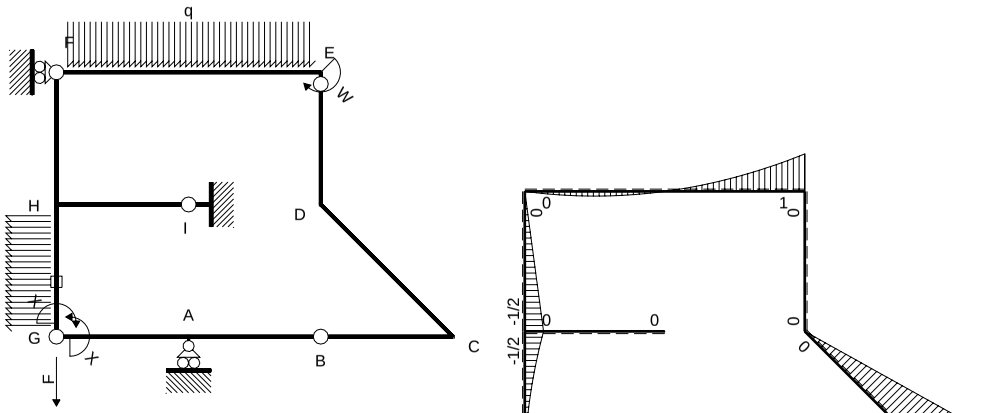

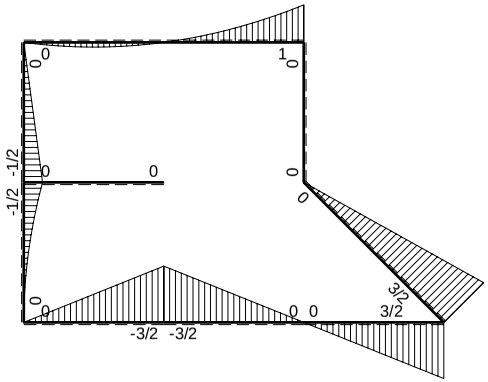

M_0 flessione da carichi assegnati

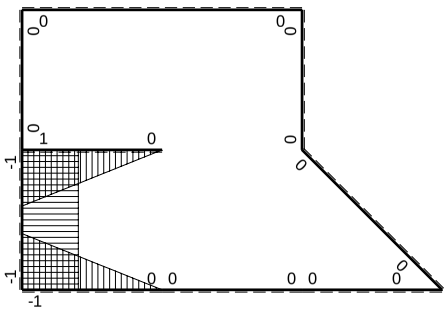

M_x flessione da iperstatica X=1

Quadro contributi PLV per iperstatica $X=W_{GA}$

→	$M_x(x)$	$M_o(x)$	M_xM_o	M_xM_x	$\int M_xM_o/EJdx$	$\int XM_xM_x/EJdx$
AB b	0	-3/2Fb+3/2Fx	0	0	0	0
BA b	0	3/2Fx	0	0		
BC b	0	3/2Fx	0	0	0	0
CB b	0	-3/2Fb+3/2Fx	0	0		
CD √2b	0	3/2Fb-3√2/4Fx	0	0	0	0
DE b	0	0	0	0	0	0
ED b	0	0	0	0		
EF 2b	0	$Fb-3/2Fx+1/2qx^2$	0	0	0	0
FE 2b	0	$1/2Fx-1/2qx^2$	0	0		
GA b	-1+x/b	-3/2Fx	$3/2Fx-3/2Fx^2/b$	$1-2x/b+x^2/b^2$	$1/4Fb^2/EJ$	1/3Xb/EJ
AG b	x/b	3/2Fb-3/2Fx	$3/2Fx-3/2Fx^2/b$	x^2/b^2		
FH b	0	-1/2Fx	0	0	0	0
HF b	0	1/2Fb-1/2Fx	0	0		
HI b	1-x/b	0	0	$1-2x/b+x^2/b^2$	0	1/3Xb/EJ
IH b	-x/b	0	0	x^2/b^2		
HG b	-1	$-1/2Fb+Fx-1/2qx^2$	$1/2Fb-Fx+1/2Fx^2/b$	1	$1/6Fb^2/EJ$	Xb/EJ
GH b	1	$1/2qx^2$	$1/2Fx^2/b$	1		
HG	elongazione asta $N_{1HG}\varepsilon_{HG}L_{HG}$				$-Fb^2/EJ$	
A	molla nodo $-V_{1A}(V_{0A}+XV_{1A})/k_A$				$-3/4Fb^2/EJ$	1/4Xb/EJ
	totali				$-4/3Fb^2/EJ$	23/12Xb/EJ
	iperstatica $X=W_{GA}$				16/23Fb	

Sviluppi di calcolo iperstatica

$L^{XX}_{GA} = \int_o^b (1 - 2\,x/b + x^2/b^2)\ 1/EJ\ dx = [\,x - x^2/b + 1/3\,x^3/b^2\,]_o^b\ 1/EJ$

$= (\,b - b + 1/3\,b\,)\ 1/EJ = 1/3\ b/EJ$

$L^{XX}_{AG} = \int_o^b (\,x^2/b^2\,)\ 1/EJ\ dx = [1/3\,x^3/b^2\,]_o^b\ 1/EJ$

$= (1/3\,b)\ 1/EJ = 1/3\ b/EJ$

$L^{XX}_{HI} = \int_o^b (1 - 2\,x/b + x^2/b^2)\ 1/EJ\ dx = [\,x - x^2/b + 1/3\,x^3/b^2\,]_o^b\ 1/EJ$

$= (\,b - b + 1/3\,b\,)\ 1/EJ = 1/3\ b/EJ$

$L^{XX}_{IH} = \int_o^b (\,x^2/b^2\,)\ 1/EJ\ dx = [1/3\,x^3/b^2\,]_o^b\ 1/EJ$

$= (1/3\,b)\ 1/EJ = 1/3\ b/EJ$

$L^{XX}_{HG} = \int_o^b (1)\ 1/EJ\ dx = [\,x\,]_o^b\ 1/EJ$

$= (\,b\,)\ 1/EJ = b/EJ$

$L^{XX}_{GH} = \int_o^b (1)\ 1/EJ\ dx = [\,x\,]_o^b\ 1/EJ$

$= (\,b\,)\ 1/EJ = b/EJ$

$L^{Xo}_{GA} = \int_o^b (3/2\,x/b - 3/2\,x^2/b^2)\ Fb\ 1/EJ\ dx = [3/4\,x^2/b - 1/2\,x^3/b^2\,]_o^b\ Fb\ 1/EJ$

$= (3/4\,b - 1/2\,b)\ Fb\ 1/EJ = 1/4\ Fb^2/EJ$

$L^{Xo}_{AG} = \int_o^b (3/2\,x/b - 3/2\,x^2/b^2)\ Fb\ 1/EJ\ dx = [3/4\,x^2/b - 1/2\,x^3/b^2\,]_o^b\ Fb\ 1/EJ$

$= (3/4\,b - 1/2\,b)\ Fb\ 1/EJ = 1/4\ Fb^2/EJ$

$L^{Xo}_{HG} = \int_o^b (1/2 - x/b + 1/2\,x^2/b^2)\ Fb\ 1/EJ\ dx - 1\ \ (-1)\ \ (-1)\ \ Fb^2/EJ$

$= [1/2\,x - 1/2\,x^2/b + 1/6\,x^3/b^2\,]_o^b\ Fb\ 1/EJ\ -\ 1\ \ (-1)\ \ (-1)\ \ Fb^2/EJ$

$= (1/2\,b - 1/2\,b + 1/6\,b)\ Fb\ 1/EJ\ -\ 1\ \ (-1)\ \ (-1)\ \ Fb^2/EJ = -5/6\ \ Fb^2/EJ$

$L^{Xo}_{GH} = \int_o^b (1/2\,x^2/b^2)\ Fb\ 1/EJ\ dx - 1\ \ (-1)\ \ (-1)\ \ Fb^2/EJ = [1/6\,x^3/b^2\,]_o^b\ Fb\ 1/EJ\ -\ 1\ \ (-1)\ \ (-1)\ \ Fb^2/EJ$

$= (1/6\,b)\ Fb\ 1/EJ\ -\ 1\ \ (-1)\ \ (-1)\ \ Fb^2/EJ = -5/6\ \ Fb^2/EJ$

PROCEDIMENTO E RISULTATI 984894 ESΣ05.xxxx.031

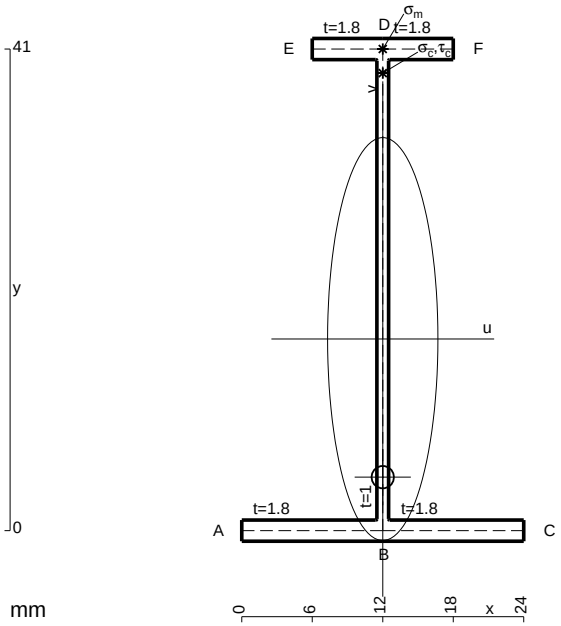

A = 105.8 mm^2
J_u = 31122. mm^4
J_v = 2333. mm^4
J_t = 83.65 mm^4
y_o = -11.76 mm
y_g = 16.31 mm
T_y = 690. N
M_x = -262200. Nmm
x_m = 12. mm
y_m = 41. mm
v_m = 24.69 mm
$\sigma_m = -Mv/J_u$ = 208. N/mm^2
y_c = 2. mm
u_c = -12. mm
v_c = -14.31 mm
$\sigma_c = -Mv/J_u$ = 208. N/mm^2
$\tau_c = TS^*/tJ_u$ = 11.82 N/mm^2
$\tau_g = TS^*/tJ_u$ = 11.82 N/mm^2
t_c = 460. mm
$\sigma_o = \sqrt{\sigma^2 + 3\tau^2}$ = 209. N/mm^2

@ Adolfo Zavelani Rossi, Politecnico di Milano, vers.27.03.13 01.12.25

ESΣ05.xxxx.031

@ Adolfo Zavelani Rossi, Politecnico di Milano, vers.27.03.13 01.12.25

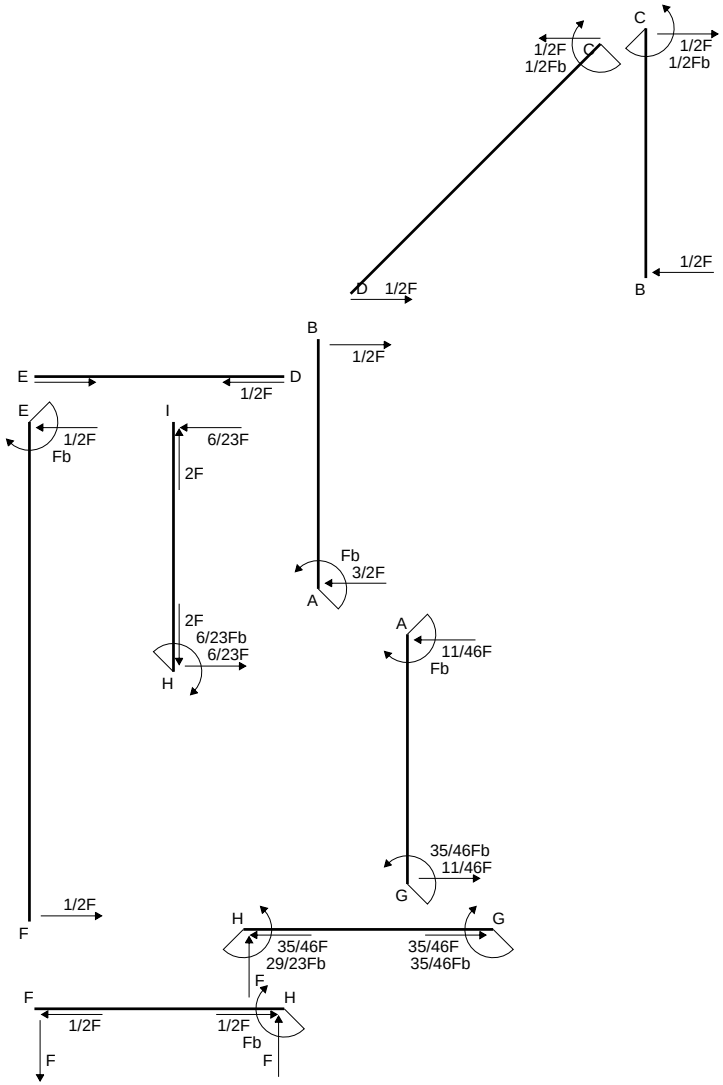

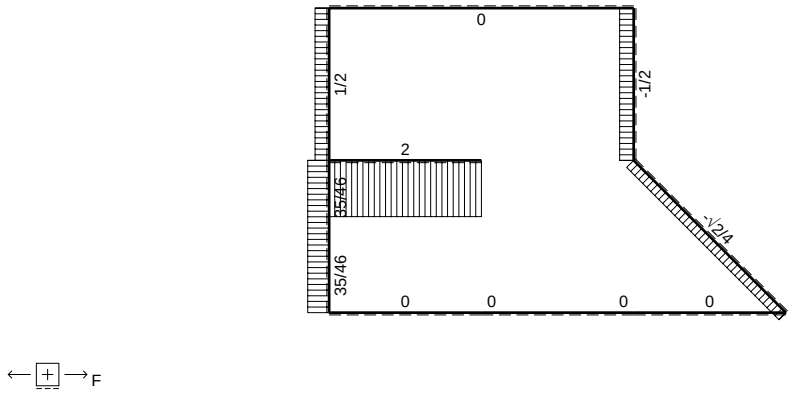

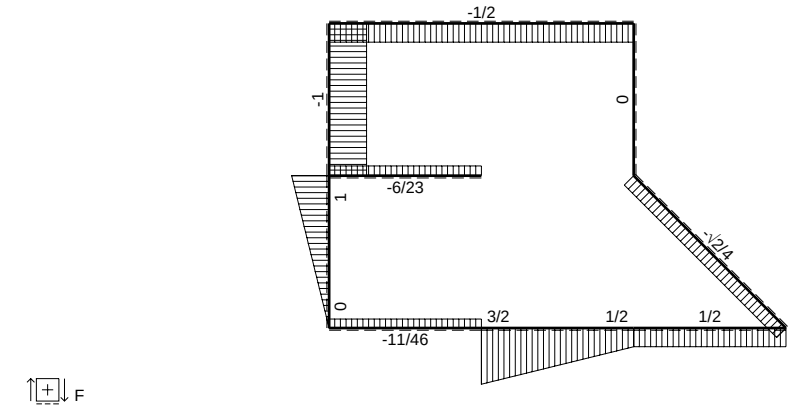

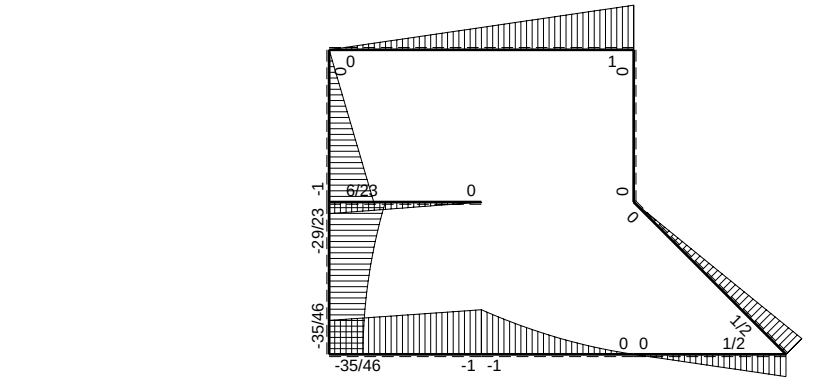

@ Adolfo Zavelani Rossi, Politecnico di Milano, vers.27.03.13 01.12.25

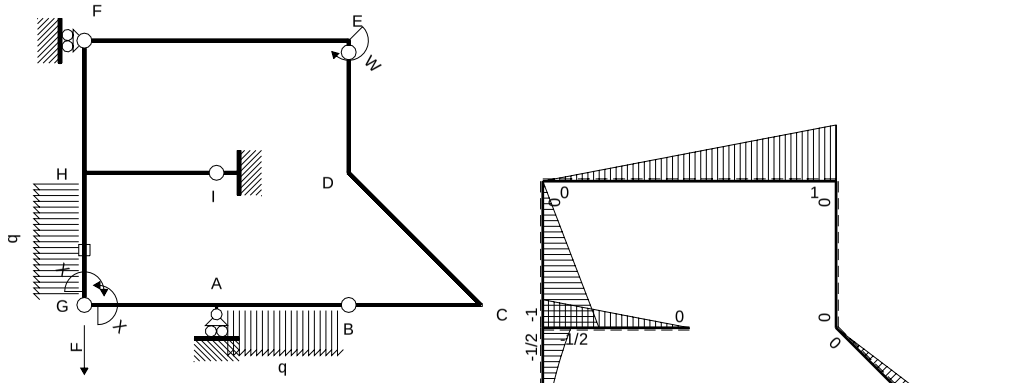

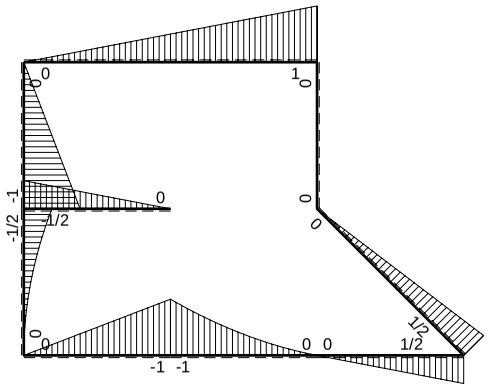

M_0 flessione da carichi assegnati

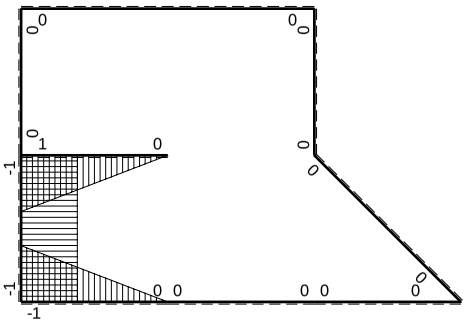

M_x flessione da iperstatica X=1

Quadro contributi PLV per iperstatica $X=W_{GA}$

→	$M_x(x)$	$M_o(x)$	M_xM_o	M_xM_x	$\int M_xM_o/EJdx$	$\int XM_xM_x/EJdx$
AB b	0	$-Fb+3/2Fx-1/2qx^2$	0	0	0	0
BA b	0	$1/2Fx+1/2qx^2$	0	0		
BC b	0	1/2Fx	0	0	0	0
CB b	0	$-1/2Fb+1/2Fx$	0	0		
CD $\sqrt{2}b$	0	$1/2Fb-\sqrt{2}/4Fx$	0	0	0	0
DE b	0	0	0	0	0	0
ED b	0	0	0	0		
EF 2b	0	$Fb-1/2Fx$	0	0	0	0
FE 2b	0	$-1/2Fx$	0	0		
GA b	$-1+x/b$	$-Fx$	$Fx-Fx^2/b$	$1-2x/b+x^2/b^2$	$1/6Fb^2/EJ$	$1/3Xb/EJ$
AG b	x/b	$Fb-Fx$	$Fx-Fx^2/b$	x^2/b^2		
FH b	0	$-Fx$	0	0	0	0
HF b	0	$Fb-Fx$	0	0		
HI b	$1-x/b$	$-1/2Fb+1/2Fx$	$-1/2Fb+Fx-1/2Fx^2/b$	$1-2x/b+x^2/b^2$	$-1/6Fb^2/EJ$	$1/3Xb/EJ$
IH b	$-x/b$	$1/2Fx$	$-1/2Fx^2/b$	x^2/b^2		
HG b	-1	$-1/2Fb+Fx-1/2qx^2$	$1/2Fb-Fx+1/2Fx^2/b$	1	$1/6Fb^2/EJ$	Xb/EJ
GH b	1	$1/2qx^2$	$1/2Fx^2/b$	1		
HG	elongazione asta $N_{1HG}\varepsilon_{HG}L_{HG}$				$-Fb^2/EJ$	
A	molla nodo $-V_{1A}(V_{0A}+XV_{1A})/k_A$				$-5/8Fb^2/EJ$	$1/4Xb/EJ$
	totali				$-35/24Fb^2/EJ$	$23/12Xb/EJ$
	iperstatica $X=W_{GA}$				35/46Fb	

Sviluppi di calcolo iperstatica

$L^{XX}_{GA} = \int_o^b (1 - 2\,x/b + x^2/b^2)\ 1/EJ\ dx = [\,x - x^2/b + 1/3\,x^3/b^2\,]_o^b\ 1/EJ$

$= (\,b - b + 1/3\,b\,)\ 1/EJ = 1/3\ b/EJ$

$L^{XX}_{AG} = \int_o^b (\,x^2/b^2\,)\ 1/EJ\ dx = [1/3\,x^3/b^2\,]_o^b\ 1/EJ$

$= (1/3\,b\,)\ 1/EJ = 1/3\ b/EJ$

$L^{XX}_{HI} = \int_o^b (1 - 2\,x/b + x^2/b^2)\ 1/EJ\ dx = [\,x - x^2/b + 1/3\,x^3/b^2\,]_o^b\ 1/EJ$

$= (\,b - b + 1/3\,b\,)\ 1/EJ = 1/3\ b/EJ$

$L^{XX}_{IH} = \int_o^b (\,x^2/b^2\,)\ 1/EJ\ dx = [1/3\,x^3/b^2\,]_o^b\ 1/EJ$

$= (1/3\,b\,)\ 1/EJ = 1/3\ b/EJ$

$L^{XX}_{HG} = \int_o^b (1)\ 1/EJ\ dx = [\,x\,]_o^b\ 1/EJ$

$= (\,b\,)\ 1/EJ = b/EJ$

$L^{XX}_{GH} = \int_o^b (1)\ 1/EJ\ dx = [\,x\,]_o^b\ 1/EJ$

$= (\,b\,)\ 1/EJ = b/EJ$

$L^{Xo}_{GA} = \int_o^b (\,x/b - x^2/b^2\,)\ Fb\ 1/EJ\ dx = [1/2\,x^2/b - 1/3\,x^3/b^2\,]_o^b\ Fb\ 1/EJ$

$= (1/2\,b - 1/3\,b\,)\ Fb\ 1/EJ = 1/6\ Fb^2/EJ$

$L^{Xo}_{AG} = \int_o^b (\,x/b - x^2/b^2\,)\ Fb\ 1/EJ\ dx = [1/2\,x^2/b - 1/3\,x^3/b^2\,]_o^b\ Fb\ 1/EJ$

$= (1/2\,b - 1/3\,b\,)\ Fb\ 1/EJ = 1/6\ Fb^2/EJ$

$L^{Xo}_{HI} = \int_o^b (-1/2 + x/b - 1/2\,x^2/b^2\,)\ Fb\ 1/EJ\ dx = [-1/2\,x + 1/2\,x^2/b - 1/6\,x^3/b^2\,]_o^b\ Fb\ 1/EJ$

$= (-1/2\,b + 1/2\,b - 1/6\,b\,)\ Fb\ 1/EJ = -1/6\ Fb^2/EJ$

$L^{Xo}_{IH} = \int_o^b (-1/2\,x^2/b^2\,)\ Fb\ 1/EJ\ dx = [-1/6\,x^3/b^2\,]_o^b\ Fb\ 1/EJ$

$= (-1/6\,b\,)\ Fb\ 1/EJ = -1/6\ Fb^2/EJ$

$L^{Xo}_{HG} = \int_o^b (1/2 - x/b + 1/2\,x^2/b^2\,)\ Fb\ 1/EJ\ dx - 1\ \ (-1)\ \ (-1)\ \ Fb^2/EJ$

$= [1/2\,x - 1/2\,x^2/b + 1/6\,x^3/b^2\,]_o^b\ Fb\ 1/EJ\ -\ 1\ \ (-1)\ \ (-1)\ \ Fb^2/EJ$

$= (1/2\,b - 1/2\,b + 1/6\,b\,)\ Fb\ 1/EJ\ -\ 1\ \ (-1)\ \ (-1)\ \ Fb^2/EJ = -5/6\ Fb^2/EJ$

$L^{Xo}_{GH} = \int_o^b (1/2\,x^2/b^2\,)\ Fb\ 1/EJ\ dx - 1\ \ (-1)\ \ (-1)\ \ Fb^2/EJ = [1/6\,x^3/b^2\,]_o^b\ Fb\ 1/EJ\ -\ 1\ \ (-1)\ \ (-1)\ \ Fb^2/EJ$

$= (1/6\,b\,)\ Fb\ 1/EJ\ -\ 1\ \ (-1)\ \ (-1)\ \ Fb^2/EJ = -5/6\ Fb^2/EJ$

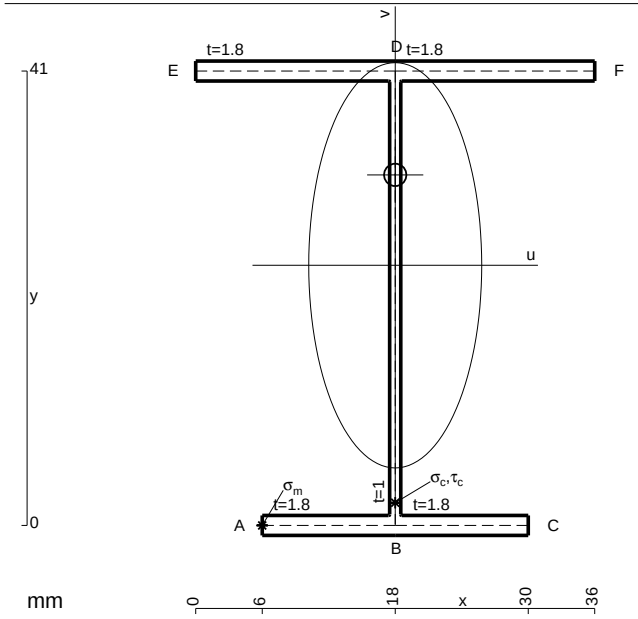

A = 149. mm^2
J_u = 49815. mm^4
J_v = 9072. mm^4
J_t = 130.3 mm^4
y_o = 8.157 mm
y_g = 23.47 mm
T_y = 1665. N
M_x = -466200. Nmm
x_m = 6. mm
u_m = -12. mm
v_m = -23.47 mm
$\sigma_m = -Mv/J_u$ = -219.7 N/mm^2
x_c = 18. mm
v_c = -23.47 mm
$\sigma_c = -Mv/J_u$ = -219.7 N/mm^2
$\tau_c = TS^*/tJ_u$ = 33.89 N/mm^2
$\tau_g = TS^*/tJ_u$ = 33.89 N/mm^2
t_c = 1110. mm
$\sigma_o = \sqrt{\sigma^2 + 3\tau^2}$ = 227.4 N/mm^2

ESΣ05.xxxx.032

@ Adolfo Zavelani Rossi, Politecnico di Milano, vers.27.03.13 01.12.25

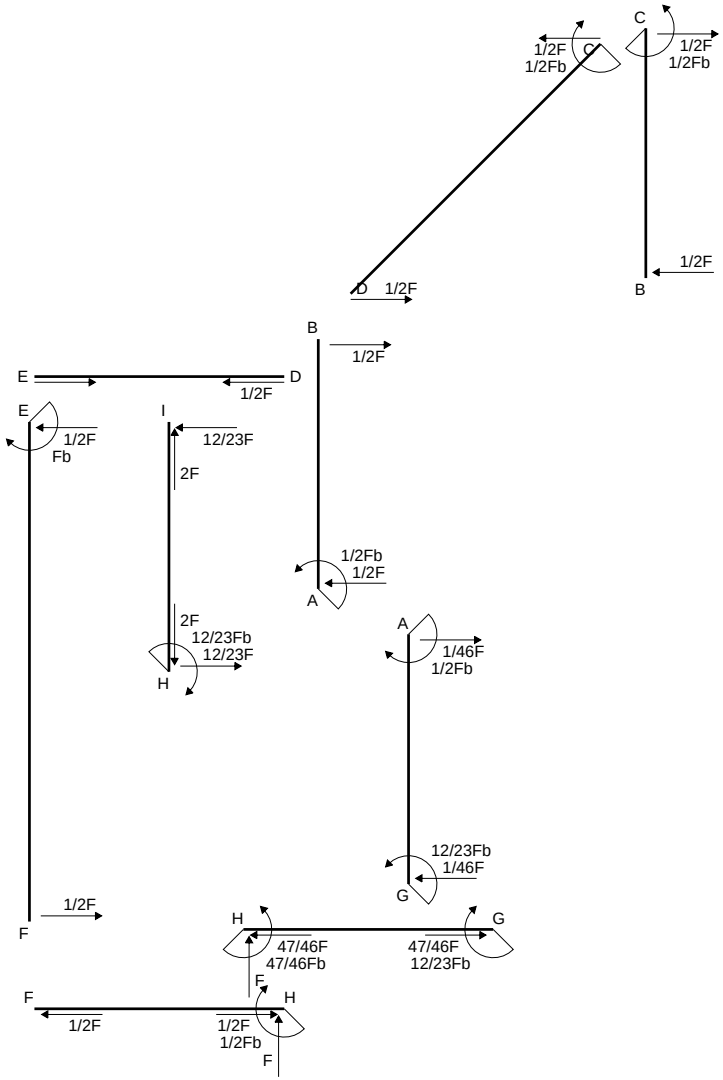
C
1/2F
1/2Fb
C
1/2F
1/2Fb
1/2F
D 1/2F
B
B
1/2F
E
D
1/2F
E
1/2F
Fb
I
12/23F
2F
1/2Fb
1/2F
A
2F
12/23Fb
12/23F
H
A
1/46F
1/2Fb
12/23Fb
1/46F
G
1/2F
F
H
G
47/46F
47/46Fb
47/46F
12/23Fb
F
F
H
1/2F
1/2F
1/2Fb
F

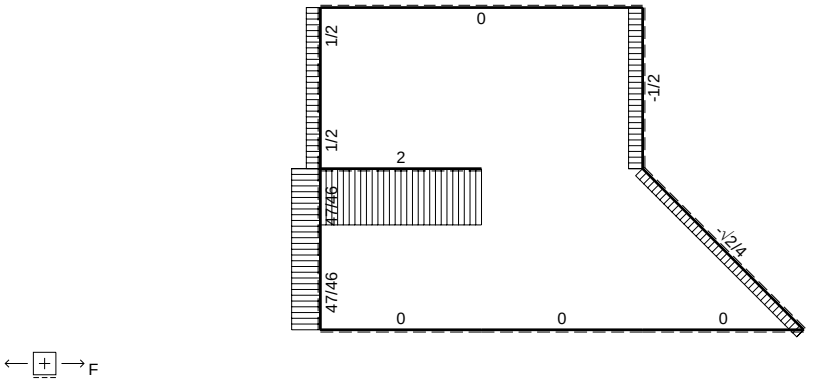
0
1/2
-1/2
1/2
2
47/46
-√2/4
47/46
0
0
0
F

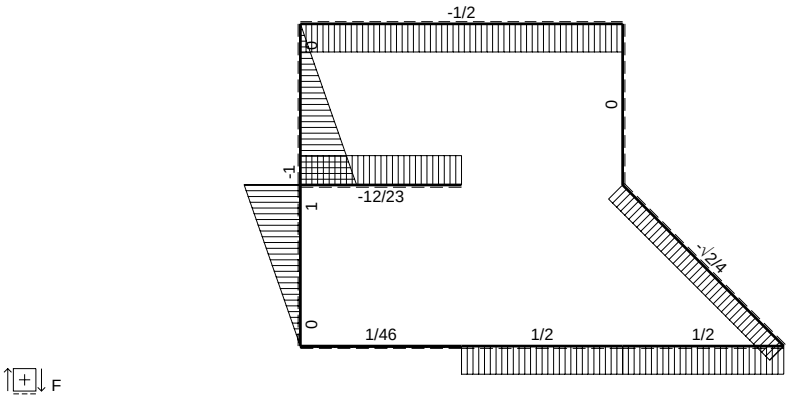
-1/2
0
0
-1
-12/23
1
-√2/4
0
1/46
1/2
1/2
F

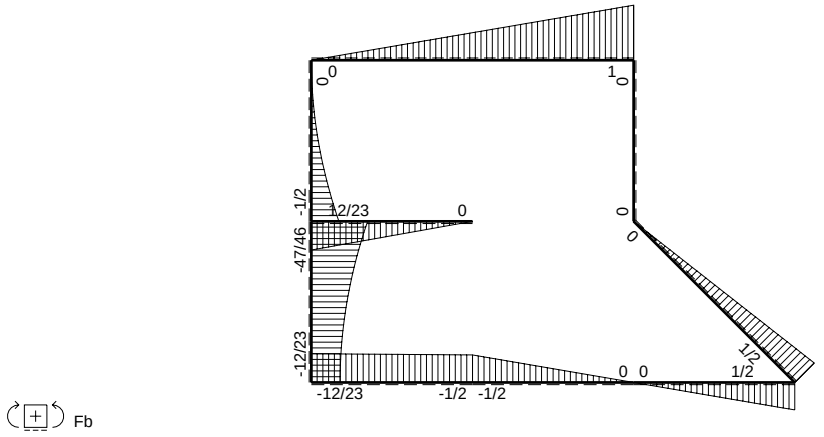
0
0
1
0
-1/2
12/23
0
-47/46
0
0
-12/23
0 0
1/2
-12/23
-1/2 -1/2
Fb

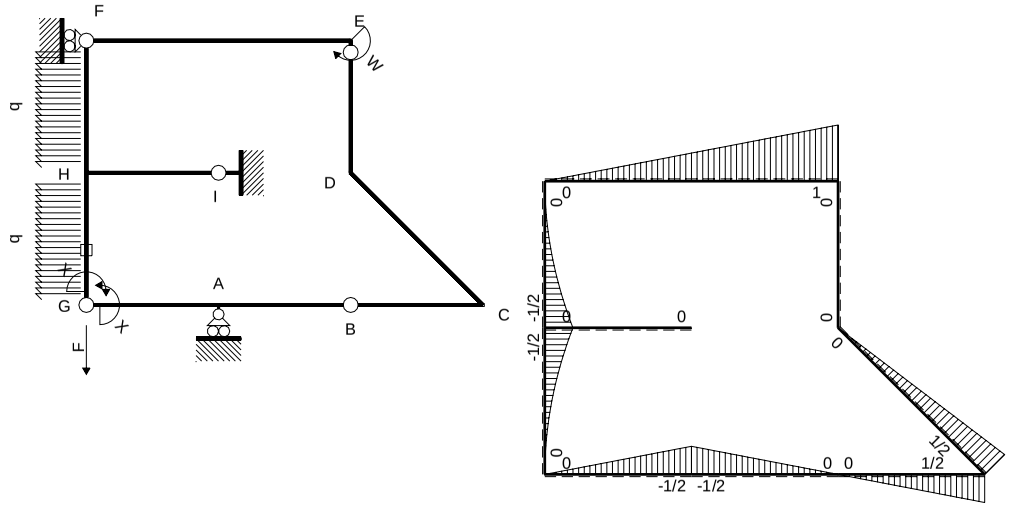

M_0 flessione da carichi assegnati

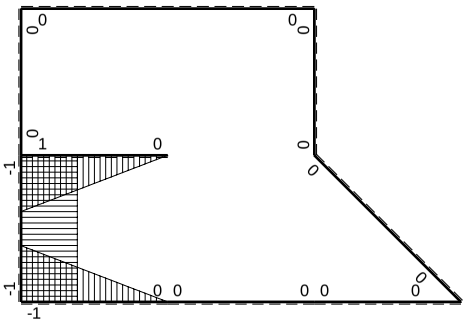

M_x flessione da iperstatica X=1

Quadro contributi PLV per iperstatica $X=W_{GA}$

→	$M_x(x)$	$M_o(x)$	M_xM_o	M_xM_x	$\int M_xM_o/EJdx$	$\int XM_xM_x/EJdx$
AB b	0	-1/2Fb+1/2Fx	0	0	0	0
BA b	0	1/2Fx	0	0		
BC b	0	1/2Fx	0	0	0	0
CB b	0	-1/2Fb+1/2Fx	0	0		
CD √2b	0	1/2Fb-√2/4Fx	0	0	0	0
DE b	0	0	0	0	0	0
ED b	0	0	0	0		
EF 2b	0	Fb-1/2Fx	0	0	0	0
FE 2b	0	-1/2Fx	0	0		
GA b	-1+x/b	-1/2Fx	$1/2Fx-1/2Fx^2/b$	$1-2x/b+x^2/b^2$	$1/12Fb^2/EJ$	1/3Xb/EJ
AG b	x/b	1/2Fb-1/2Fx	$1/2Fx-1/2Fx^2/b$	x^2/b^2		
FH b	0	$-1/2qx^2$	0	0	0	0
HF b	0	$1/2Fb-Fx+1/2qx^2$	0	0		
HI b	1-x/b	0	0	$1-2x/b+x^2/b^2$	0	1/3Xb/EJ
IH b	-x/b	0	0	x^2/b^2		
HG b	-1	$-1/2Fb+Fx-1/2qx^2$	$1/2Fb-Fx+1/2Fx^2/b$	1	$1/6Fb^2/EJ$	Xb/EJ
GH b	1	$1/2qx^2$	$1/2Fx^2/b$	1		
HG	elongazione asta $N_{1HG}\varepsilon_{HG}L_{HG}$				$-Fb^2/EJ$	
A	molla nodo $-V_{1A}(V_{0A}+XV_{1A})/k_A$				$-1/4Fb^2/EJ$	1/4Xb/EJ
	totali				$-Fb^2/EJ$	23/12Xb/EJ
	iperstatica $X=W_{GA}$				12/23Fb	

Sviluppi di calcolo iperstatica

$L^{XX}_{GA} = \int_o^b (1 - 2\,x/b + x^2/b^2)\ 1/EJ\ dx = [\,x - x^2/b + 1/3\,x^3/b^2\,]_o^b\ 1/EJ$

$= (\,b - b + 1/3\,b\,)\ 1/EJ\ = 1/3\ b/EJ$

$L^{XX}_{AG} = \int_o^b (\,x^2/b^2\,)\ 1/EJ\ dx = [1/3\,x^3/b^2\,]_o^b\ 1/EJ$

$= (1/3\,b\,)\ 1/EJ\ = 1/3\ b/EJ$

$L^{XX}_{HI} = \int_o^b (1 - 2\,x/b + x^2/b^2)\ 1/EJ\ dx = [\,x - x^2/b + 1/3\,x^3/b^2\,]_o^b\ 1/EJ$

$= (\,b - b + 1/3\,b\,)\ 1/EJ\ = 1/3\ b/EJ$

$L^{XX}_{IH} = \int_o^b (\,x^2/b^2\,)\ 1/EJ\ dx = [1/3\,x^3/b^2\,]_o^b\ 1/EJ$

$= (1/3\,b\,)\ 1/EJ\ = 1/3\ b/EJ$

$L^{XX}_{HG} = \int_o^b (1)\ 1/EJ\ dx = [\,x\,]_o^b\ 1/EJ$

$= (\,b\,)\ 1/EJ\ = b/EJ$

$L^{XX}_{GH} = \int_o^b (1)\ 1/EJ\ dx = [\,x\,]_o^b\ 1/EJ$

$= (\,b\,)\ 1/EJ\ = b/EJ$

$L^{Xo}_{GA} = \int_o^b (1/2\,x/b - 1/2\,x^2/b^2)\ Fb\ 1/EJ\ dx = [1/4\,x^2/b - 1/6\,x^3/b^2\,]_o^b\ Fb\ 1/EJ$

$= (1/4\,b - 1/6\,b\,)\ Fb\ 1/EJ\ = 1/12\ Fb^2/EJ$

$L^{Xo}_{AG} = \int_o^b (1/2\,x/b - 1/2\,x^2/b^2)\ Fb\ 1/EJ\ dx = [1/4\,x^2/b - 1/6\,x^3/b^2\,]_o^b\ Fb\ 1/EJ$

$= (1/4\,b - 1/6\,b\,)\ Fb\ 1/EJ\ = 1/12\ Fb^2/EJ$

$L^{Xo}_{HG} = \int_o^b (1/2 - x/b + 1/2\,x^2/b^2\,)\ Fb\ 1/EJ\ dx - 1\ \ (-1)\ \ (-1)\ \ Fb^2/EJ$

$= [1/2\,x - 1/2\,x^2/b + 1/6\,x^3/b^2\,]_o^b\ Fb\ 1/EJ\ - 1\ \ (-1)\ \ (-1)\ \ Fb^2/EJ$

$= (1/2\,b - 1/2\,b + 1/6\,b\,)\ Fb\ 1/EJ\ - 1\ \ (-1)\ \ (-1)\ \ Fb^2/EJ = -5/6\ \ Fb^2/EJ$

$L^{Xo}_{GH} = \int_o^b (1/2\,x^2/b^2\,)\ Fb\ 1/EJ\ dx - 1\ \ (-1)\ \ (-1)\ \ Fb^2/EJ = [1/6\,x^3/b^2\,]_o^b\ Fb\ 1/EJ\ - 1\ \ (-1)\ \ (-1)\ \ Fb^2/EJ$

$= (1/6\,b\,)\ Fb\ 1/EJ\ - 1\ \ (-1)\ \ (-1)\ \ Fb^2/EJ = -5/6\ \ Fb^2/EJ$

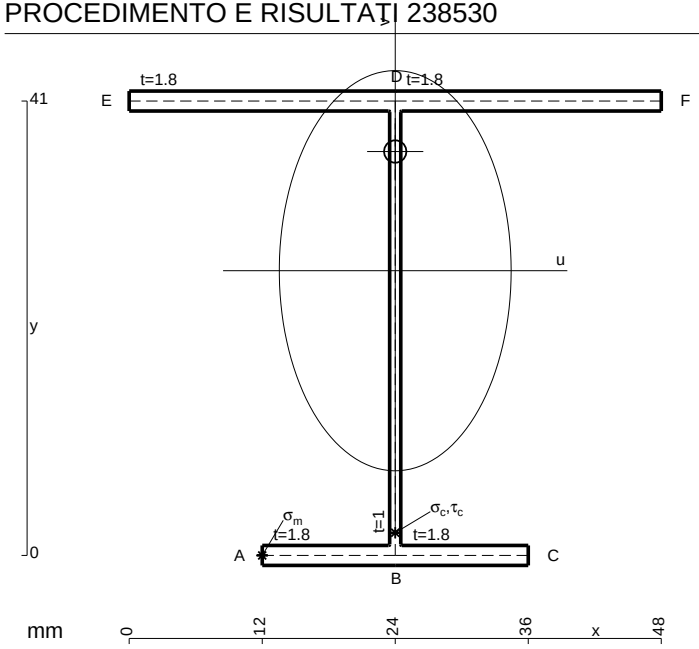

A = 170.6 mm^2
J_u = 55611. mm^4
J_v = 18662. mm^4
J_t = 153.6 mm^4
y_o = 10.75 mm
y_g = 25.69 mm
T_y = -550. N
M_x = 495000. Nmm
x_m = 12. mm
u_m = -12. mm
v_m = -25.69 mm
$\sigma_m = -Mv/J_u$ = 228.7 N/mm^2
x_c = 24. mm
v_c = -25.69 mm
$\sigma_c = -Mv/J_u$ = 228.7 N/mm^2
$\tau_c = TS^*/tJ_u$ = 10.98 N/mm^2
$\tau_g = TS^*/tJ_u$ = 10.98 N/mm^2
t_c = 1100. mm
$\sigma_o = \sqrt{\sigma^2 + 3\tau^2}$ = 229.5 N/mm^2

ESΣ05.xxxx.033

@ Adolfo Zavelani Rossi, Politecnico di Milano, vers.27.03.13 01.12.25

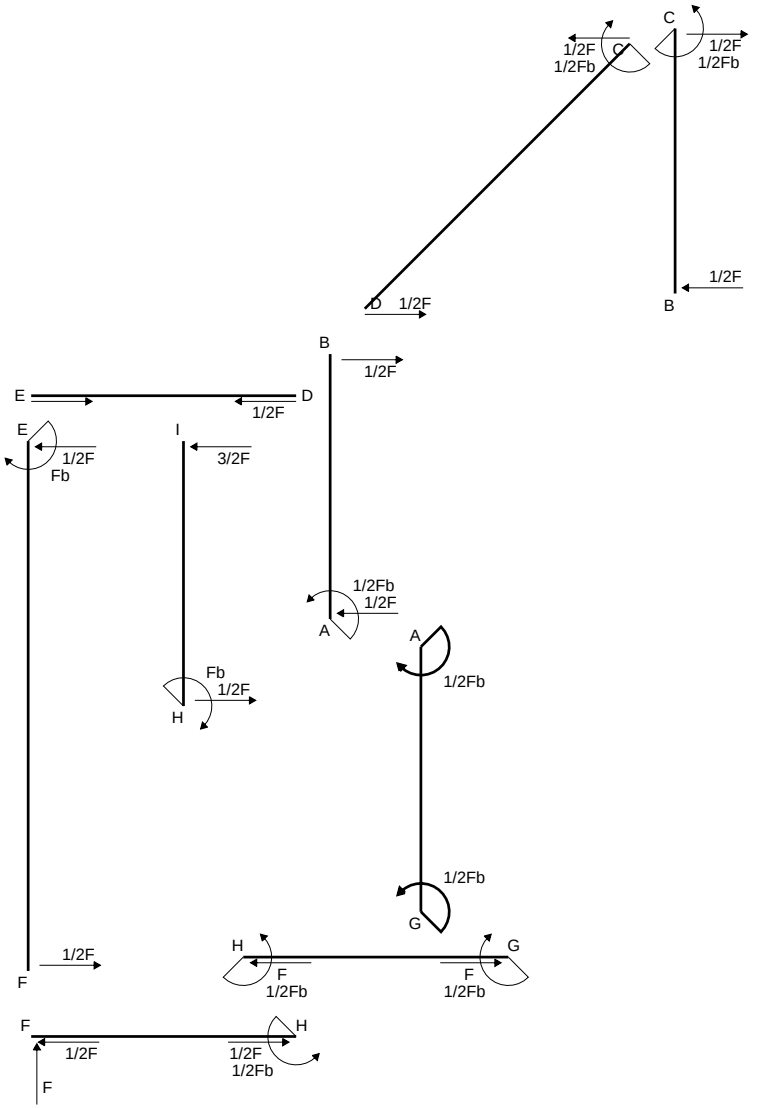
C
1/2F
1/2Fb
C
1/2F
1/2Fb
D
1/2F
B
1/2F
B
1/2F
E
D
1/2F
E
1/2F
Fb
I
3/2F
1/2Fb
1/2F
A
A
1/2Fb
Fb
1/2F
H
1/2Fb
G
1/2F
F
H
G
F
1/2Fb
F
1/2Fb
F
H
1/2F
1/2F
1/2Fb
F

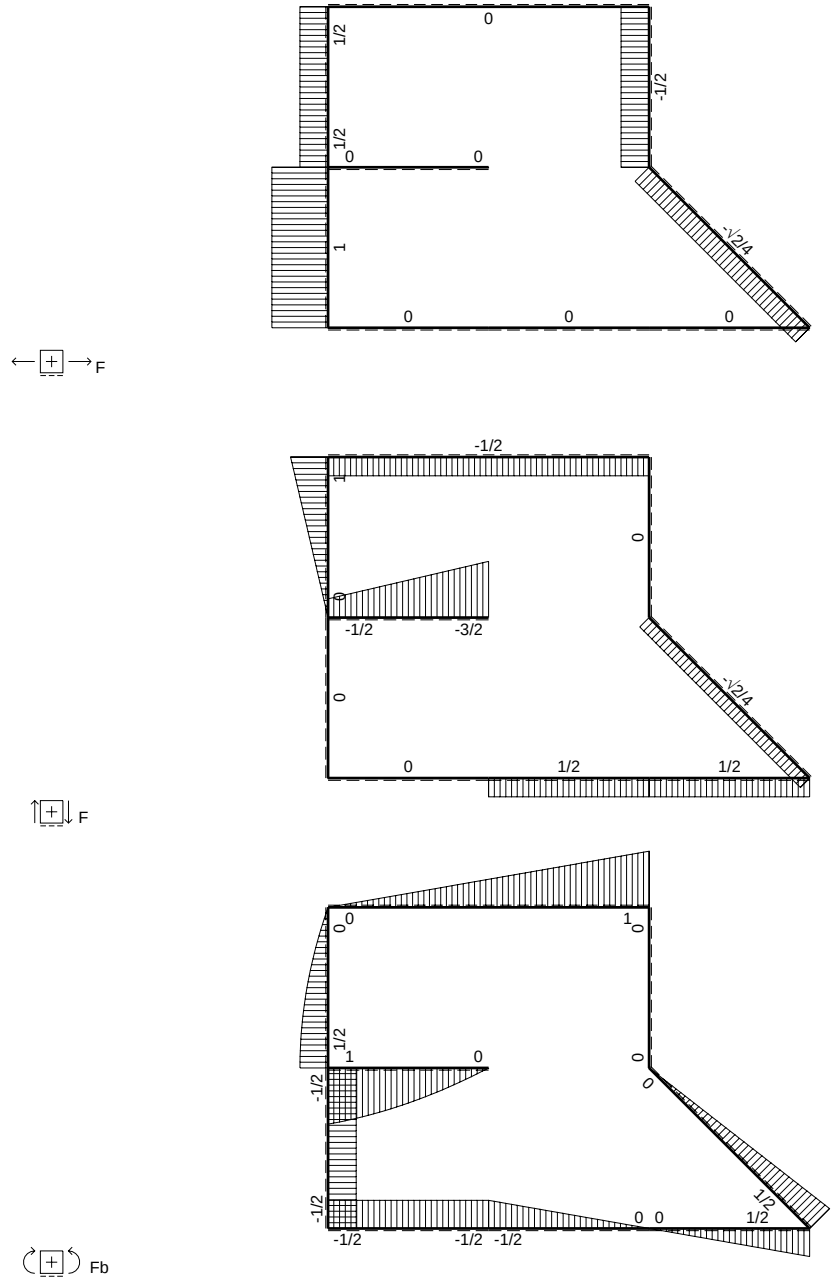
0
1/2
-1/2
1/2
0
0
1
-√2/4
0
0
0
F
-1/2
1
0
0
-1/2
-3/2
0
-√2/4
0
1/2
1/2
F
0
1
0
0
1/2
1
0
0
-1/2
0
-1/2
1/2
0 0
1/2
-1/2
-1/2 -1/2
Fb

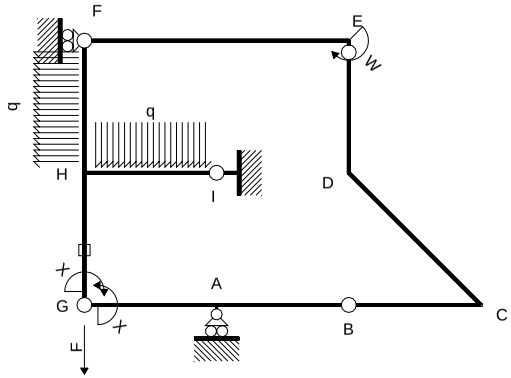

Schema di calcolo iperstatico

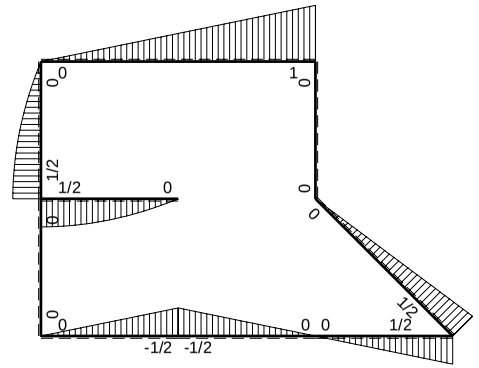

M_0 flessione da carichi assegnati

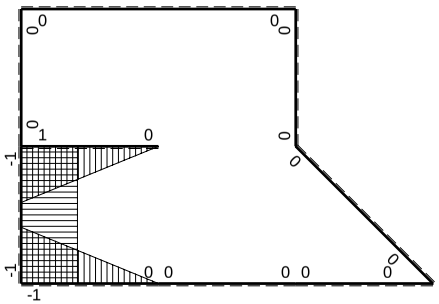

M_x flessione da iperstatica X=1

PROCEDIMENTO E RISULTATI 236818 ESΣ05.xxxx.034

@ Adolfo Zavelani Rossi, Politecnico di Milano, vers.27.03.13 01.12.25

Quadro contributi PLV per iperstatica $X=W_{GA}$

→	$M_x(x)$	$M_o(x)$	M_xM_o	M_xM_x	$\int M_xM_o/EJdx$	$\int XM_xM_x/EJdx$
AB b	0	-1/2Fb+1/2Fx	0	0	0	0
BA b	0	1/2Fx	0	0		
BC b	0	1/2Fx	0	0	0	0
CB b	0	-1/2Fb+1/2Fx	0	0		
CD √2b	0	1/2Fb-√2/4Fx	0	0	0	0
DE b	0	0	0	0	0	0
ED b	0	0	0	0		
EF 2b	0	Fb-1/2Fx	0	0	0	0
FE 2b	0	-1/2Fx	0	0		
GA b	-1+x/b	-1/2Fx	$1/2Fx-1/2Fx^2/b$	$1-2x/b+x^2/b^2$	$1/12Fb^2/EJ$	1/3Xb/EJ
AG b	x/b	1/2Fb-1/2Fx	$1/2Fx-1/2Fx^2/b$	x^2/b^2		
FH b	0	$Fx-1/2qx^2$	0	0	0	0
HF b	0	$-1/2Fb+1/2qx^2$	0	0		
HI b	1-x/b	$1/2Fb-1/2qx^2$	$1/2Fb-1/2Fx-1/2Fx^2/b+1/2qx^3/b$	$1-2x/b+x^2/b^2$	$5/24Fb^2/EJ$	1/3Xb/EJ
IH b	-x/b	$-Fx+1/2qx^2$	$Fx^2/b-1/2qx^3/b$	x^2/b^2		
HG b	-1	0	0	1	0	Xb/EJ
GH b	1	0	0	1		
HG	elongazione asta $N_{1HG}\varepsilon_{HG}L_{HG}$				$-Fb^2/EJ$	
A	molla nodo $-V_{1A}(V_{oA}+XV_{1A})/k_A$				$-1/4Fb^2/EJ$	1/4Xb/EJ
	totali				$-23/24Fb^2/EJ$	23/12Xb/EJ
	iperstatica $X=W_{GA}$				1/2Fb	

PROCEDIMENTO E RISULTATI 236818 ESΣ05.xxxx.034

Sviluppi di calcolo iperstatica

@ Adolfo Zavelani Rossi, Politecnico di Milano, vers.27.03.13 01.12.25

$L^{XX}_{GA} = \int_o^b (1 - 2\,x/b + x^2/b^2)\ 1/EJ\ dx = [\ x - x^2/b + 1/3\ x^3/b^2\ ]_o^b\ 1/EJ$

$= (\ b - b + 1/3\ b\ )\ 1/EJ\ = 1/3\ b/EJ$

$L^{XX}_{AG} = \int_o^b (\ x^2/b^2\ )\ 1/EJ\ dx = [1/3\ x^3/b^2\ ]_o^b\ 1/EJ$

$= (1/3\ b\ )\ 1/EJ\ = 1/3\ b/EJ$

$L^{XX}_{HI} = \int_o^b (1 - 2\,x/b + x^2/b^2)\ 1/EJ\ dx = [\ x - x^2/b + 1/3\ x^3/b^2\ ]_o^b\ 1/EJ$

$= (\ b - b + 1/3\ b\ )\ 1/EJ\ = 1/3\ b/EJ$

$L^{XX}_{IH} = \int_o^b (\ x^2/b^2\ )\ 1/EJ\ dx = [1/3\ x^3/b^2\ ]_o^b\ 1/EJ$

$= (1/3\ b\ )\ 1/EJ\ = 1/3\ b/EJ$

$L^{XX}_{HG} = \int_o^b (1\ )\ 1/EJ\ dx = [\ x\ ]_o^b\ 1/EJ$

$= (\ b\ )\ 1/EJ\ =\ b/EJ$

$L^{XX}_{GH} = \int_o^b (1\ )\ 1/EJ\ dx = [\ x\ ]_o^b\ 1/EJ$

$= (\ b\ )\ 1/EJ\ =\ b/EJ$

$L^{Xo}_{GA} = \int_o^b (1/2\ x/b - 1/2\ x^2/b^2\ )\ Fb\ 1/EJ\ dx = [1/4\ x^2/b - 1/6\ x^3/b^2\ ]_o^b\ Fb\ 1/EJ$

$= (1/4\ b - 1/6\ b\ )\ Fb\ 1/EJ\ = 1/12\ \ Fb^2/EJ$

$L^{Xo}_{AG} = \int_o^b (1/2\ x/b - 1/2\ x^2/b^2\ )\ Fb\ 1/EJ\ dx = [1/4\ x^2/b - 1/6\ x^3/b^2\ ]_o^b\ Fb\ 1/EJ$

$= (1/4\ b - 1/6\ b\ )\ Fb\ 1/EJ\ = 1/12\ \ Fb^2/EJ$

$L^{Xo}_{HI} = \int_o^b (1/2 - 1/2\ x/b - 1/2\ x^2/b^2 + 1/2\ x^3/b^3\ )\ Fb\ 1/EJ\ dx$

$= [1/2\ x - 1/4\ x^2/b - 1/6\ x^3/b^2 + 1/8\ x^4/b^3\ ]_o^b\ Fb\ 1/EJ$

$= (1/2\ b - 1/4\ b - 1/6\ b + 1/8\ b\ )\ Fb\ 1/EJ\ = 5/24\ \ Fb^2/EJ$

$L^{Xo}_{IH} = \int_o^b (\ x^2/b^2 - 1/2\ x^3/b^3\ )\ Fb\ 1/EJ\ dx = [1/3\ x^3/b^2 - 1/8\ x^4/b^3\ ]_o^b\ Fb\ 1/EJ$

$= (1/3\ b - 1/8\ b\ )\ Fb\ 1/EJ\ = 5/24\ \ Fb^2/EJ$

PROCEDIMENTO E RISULTATI 236818 ESΣ05.xxxx.034

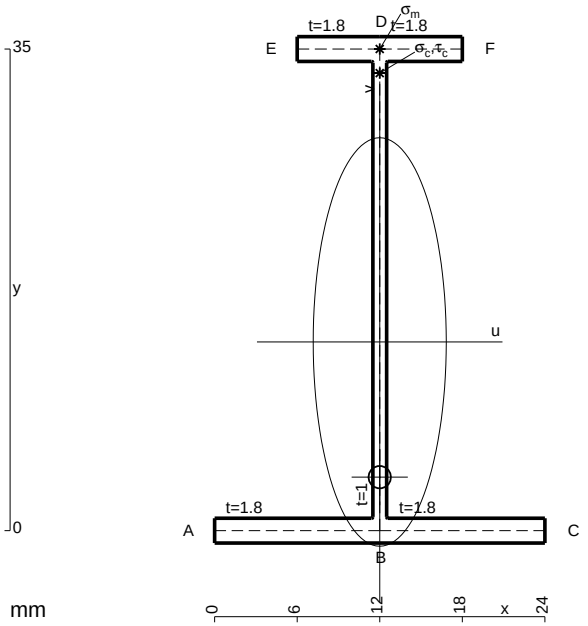

A = 99.8 mm^2
J_u = 21986. mm^4
J_v = 2333. mm^4
J_t = 81.65 mm^4
y_o = -9.824 mm
y_g = 13.71 mm
T_y = -295. N
M_x = 247800. Nmm
x_m = 12. mm
y_m = 35. mm
v_m = 21.29 mm
$\sigma_m = -Mv/J_u$ = -239.9 N/mm^2
y_c = 2. mm
u_c = -12. mm
v_c = -11.71 mm
$\sigma_c = -Mv/J_u$ = -239.9 N/mm^2
$\tau_c = TS^*/tJ_u$ = 6.17 N/mm^2
$\tau_g = TS^*/tJ_u$ = 6.17 N/mm^2
t_c = 590. mm
$\sigma_o = \sqrt{\sigma^2 + 3\tau^2}$ = 240.2 N/mm^2

@ Adolfo Zavelani Rossi, Politecnico di Milano, vers.27.03.13 01.12.25

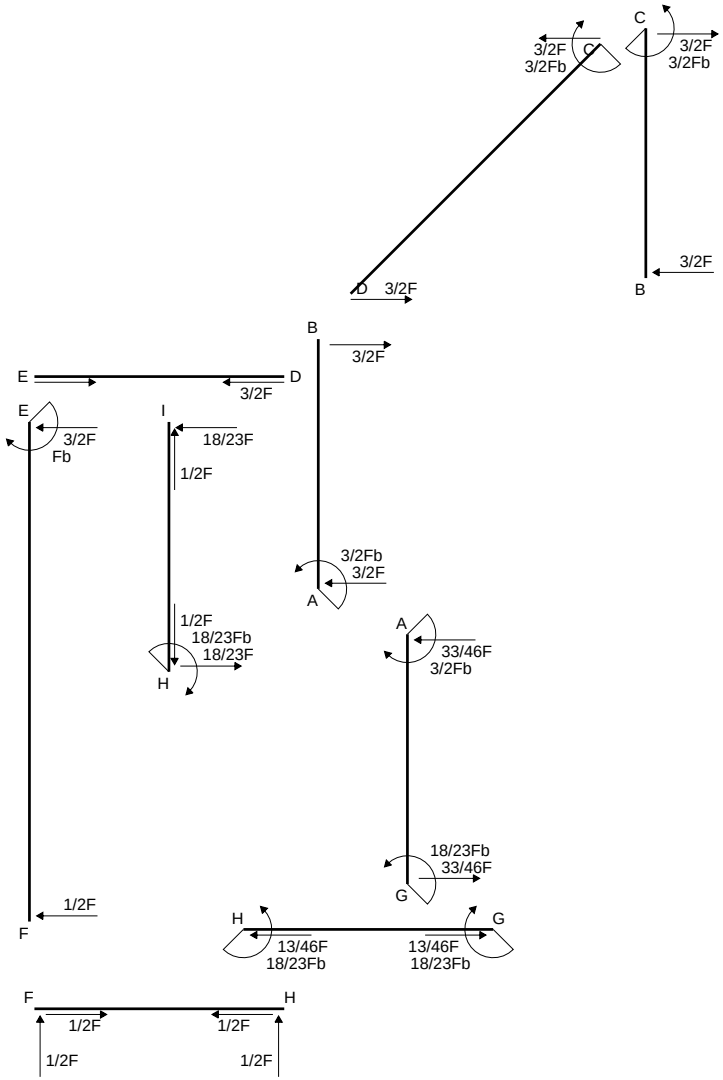
C
3/2F
3/2Fb
C
3/2F
3/2Fb
3/2F
D 3/2F
B
B
3/2F
E
D
3/2F
E
3/2F
Fb
I
18/23F
1/2F
3/2Fb
3/2F
A
1/2F
18/23Fb
18/23F
H
A
33/46F
3/2Fb
18/23Fb
33/46F
G
1/2F
F
H
G
13/46F
18/23Fb
13/46F
18/23Fb
F
H
1/2F
1/2F
1/2F
1/2F

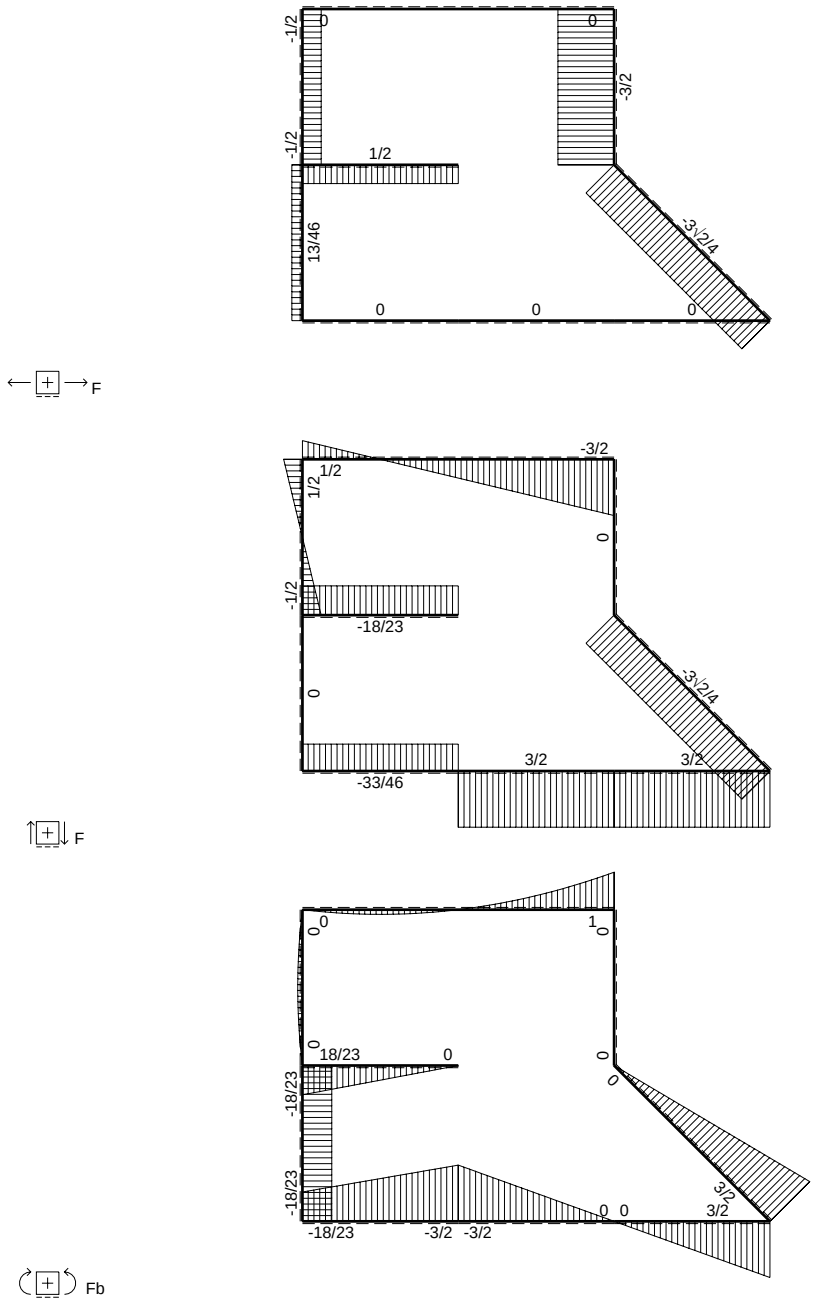
-1/2
0
0
-3/2
-1/2
1/2
13/46
-3√2/4
0
0
0
F
-3/2
1/2
1/2
0
-1/2
-18/23
0
-3√2/4
3/2
3/2
-33/46
F
0
1
0
0
0
18/23
0
0
-18/23
0
3/2
-18/23
0 0
3/2
-18/23
-3/2 -3/2
Fb

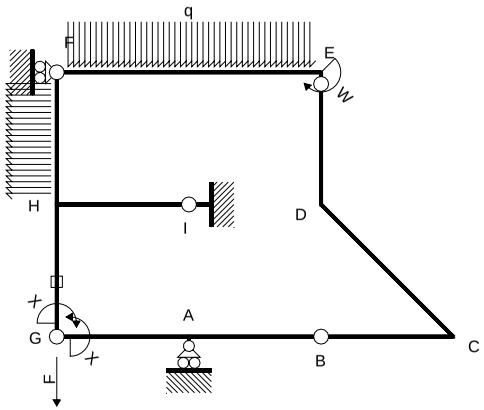

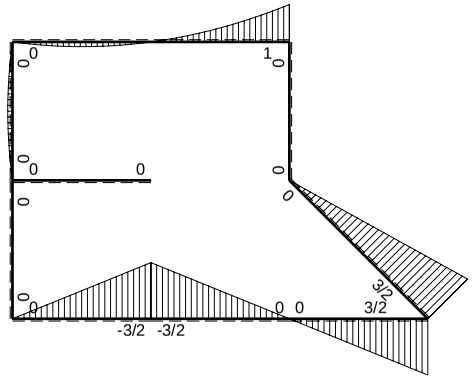

M_0 flessione da carichi assegnati

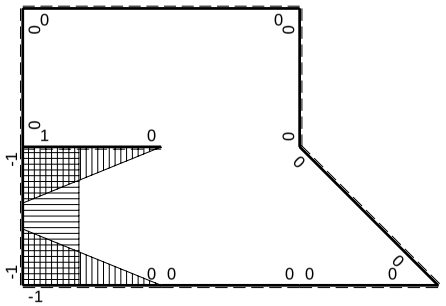

M_x flessione da iperstatica X=1

Quadro contributi PLV per iperstatica $X=W_{GA}$

→	$M_x(x)$	$M_0(x)$	M_xM_0	M_xM_x	$\int M_xM_0/EJdx$	$\int XM_xM_x/EJdx$
AB b	0	-3/2Fb+3/2Fx	0	0	0	0
BA b	0	3/2Fx	0	0		
BC b	0	3/2Fx	0	0	0	0
CB b	0	-3/2Fb+3/2Fx	0	0		
CD √2b	0	3/2Fb-3√2/4Fx	0	0	0	0
DE b	0	0	0	0	0	0
ED b	0	0	0	0		
EF 2b	0	$Fb-3/2Fx+1/2qx^2$	0	0	0	0
FE 2b	0	$1/2Fx-1/2qx^2$	0	0		
GA b	-1+x/b	-3/2Fx	$3/2Fx-3/2Fx^2/b$	$1-2x/b+x^2/b^2$	$1/4Fb^2/EJ$	1/3Xb/EJ
AG b	x/b	3/2Fb-3/2Fx	$3/2Fx-3/2Fx^2/b$	x^2/b^2		
FH b	0	$1/2Fx-1/2qx^2$	0	0	0	0
HF b	0	$-1/2Fx+1/2qx^2$	0	0		
HI b	1-x/b	0	0	$1-2x/b+x^2/b^2$	0	1/3Xb/EJ
IH b	-x/b	0	0	x^2/b^2		
HG b	-1	0	0	1	0	Xb/EJ
GH b	1	0	0	1		
HG	elongazione asta $N_{1HG}\varepsilon_{HG}L_{HG}$				$-Fb^2/EJ$	
A	molla nodo $-V_{1A}(V_{0A}+XV_{1A})/k_A$				$-3/4Fb^2/EJ$	1/4Xb/EJ
	totali				$-3/2Fb^2/EJ$	23/12Xb/EJ
	iperstatica $X=W_{GA}$				18/23Fb	

Sviluppi di calcolo iperstatica

$L^{XX}_{GA} = \int_o^b (1 - 2\,x/b + x^2/b^2)\ 1/EJ\ dx = [\ x - x^2/b + 1/3\ x^3/b^2\ ]_o^b\ 1/EJ$

$= (\ b - b + 1/3\ b\ )\ 1/EJ\ = 1/3\ b/EJ$

$L^{XX}_{AG} = \int_o^b (\ x^2/b^2\ )\ 1/EJ\ dx = [1/3\ x^3/b^2\ ]_o^b\ 1/EJ$

$= (1/3\ b\ )\ 1/EJ\ = 1/3\ b/EJ$

$L^{XX}_{HI} = \int_o^b (1 - 2\,x/b + x^2/b^2)\ 1/EJ\ dx = [\ x - x^2/b + 1/3\ x^3/b^2\ ]_o^b\ 1/EJ$

$= (\ b - b + 1/3\ b\ )\ 1/EJ\ = 1/3\ b/EJ$

$L^{XX}_{IH} = \int_o^b (\ x^2/b^2\ )\ 1/EJ\ dx = [1/3\ x^3/b^2\ ]_o^b\ 1/EJ$

$= (1/3\ b\ )\ 1/EJ\ = 1/3\ b/EJ$

$L^{XX}_{HG} = \int_o^b (1\ )\ 1/EJ\ dx = [\ x\ ]_o^b\ 1/EJ$

$= (\ b\ )\ 1/EJ\ =\ b/EJ$

$L^{XX}_{GH} = \int_o^b (1\ )\ 1/EJ\ dx = [\ x\ ]_o^b\ 1/EJ$

$= (\ b\ )\ 1/EJ\ =\ b/EJ$

$L^{Xo}_{GA} = \int_o^b (3/2\ x/b - 3/2\ x^2/b^2\ )\ Fb\ 1/EJ\ dx = [3/4\ x^2/b - 1/2\ x^3/b^2\ ]_o^b\ Fb\ 1/EJ$

$= (3/4\ b - 1/2\ b\ )\ Fb\ 1/EJ\ = 1/4\ Fb^2/EJ$

$L^{Xo}_{AG} = \int_o^b (3/2\ x/b - 3/2\ x^2/b^2\ )\ Fb\ 1/EJ\ dx = [3/4\ x^2/b - 1/2\ x^3/b^2\ ]_o^b\ Fb\ 1/EJ$

$= (3/4\ b - 1/2\ b\ )\ Fb\ 1/EJ\ = 1/4\ Fb^2/EJ$

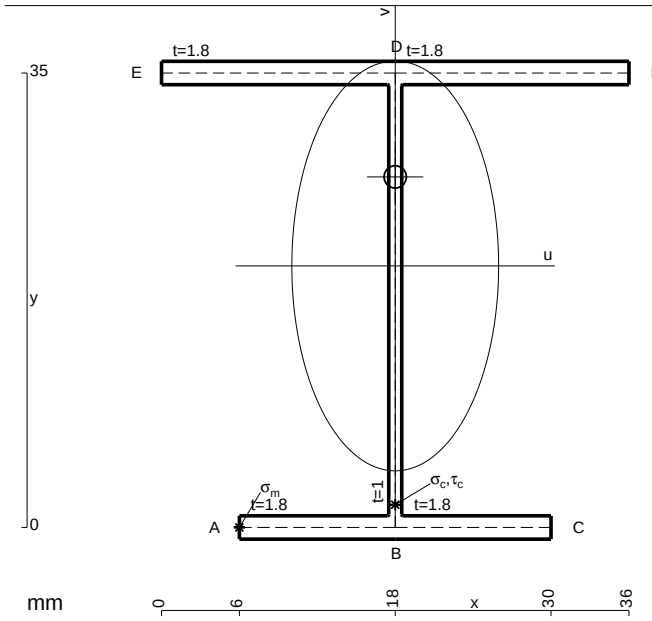

A = 143. mm^2
J_u = 35649. mm^4
J_v = 9072. mm^4
J_t = 128.3 mm^4
y_o = 6.857 mm
y_g = 20.14 mm
T_y = 780. N
M_x = -351000. Nmm
x_m = 6. mm
u_m = -12. mm
v_m = -20.14 mm
$\sigma_m = -Mv/J_u$ = -198.3 N/mm^2
x_c = 18. mm
v_c = -20.14 mm
$\sigma_c = -Mv/J_u$ = -198.3 N/mm^2
$\tau_c = TS^*/tJ_u$ = 19.04 N/mm^2
$\tau_g = TS^*/tJ_u$ = 19.04 N/mm^2
t_c = 520. mm
$\sigma_o = \sqrt{\sigma^2 + 3\tau^2}$ = 201.1 N/mm^2

ESΣ05.xxxx.035

@ Adolfo Zavelani Rossi, Politecnico di Milano, vers.27.03.13 01.12.25

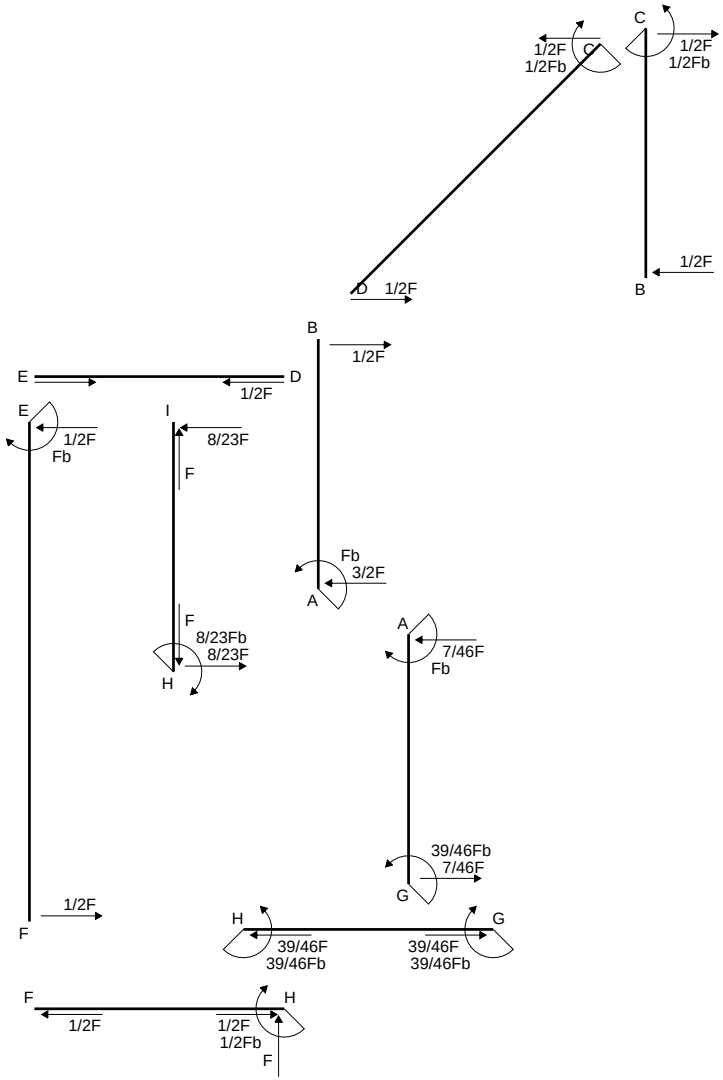
C
1/2F
1/2Fb
C
1/2F
1/2Fb
D
1/2F
B
1/2F
B
1/2F
E
D
1/2F
E
1/2F
Fb
I
8/23F
F
Fb
3/2F
A
F
8/23Fb
8/23F
H
A
7/46F
Fb
39/46Fb
7/46F
G
1/2F
F
H
G
39/46F
39/46Fb
39/46F
39/46Fb
F
H
1/2F
1/2F
1/2Fb
F

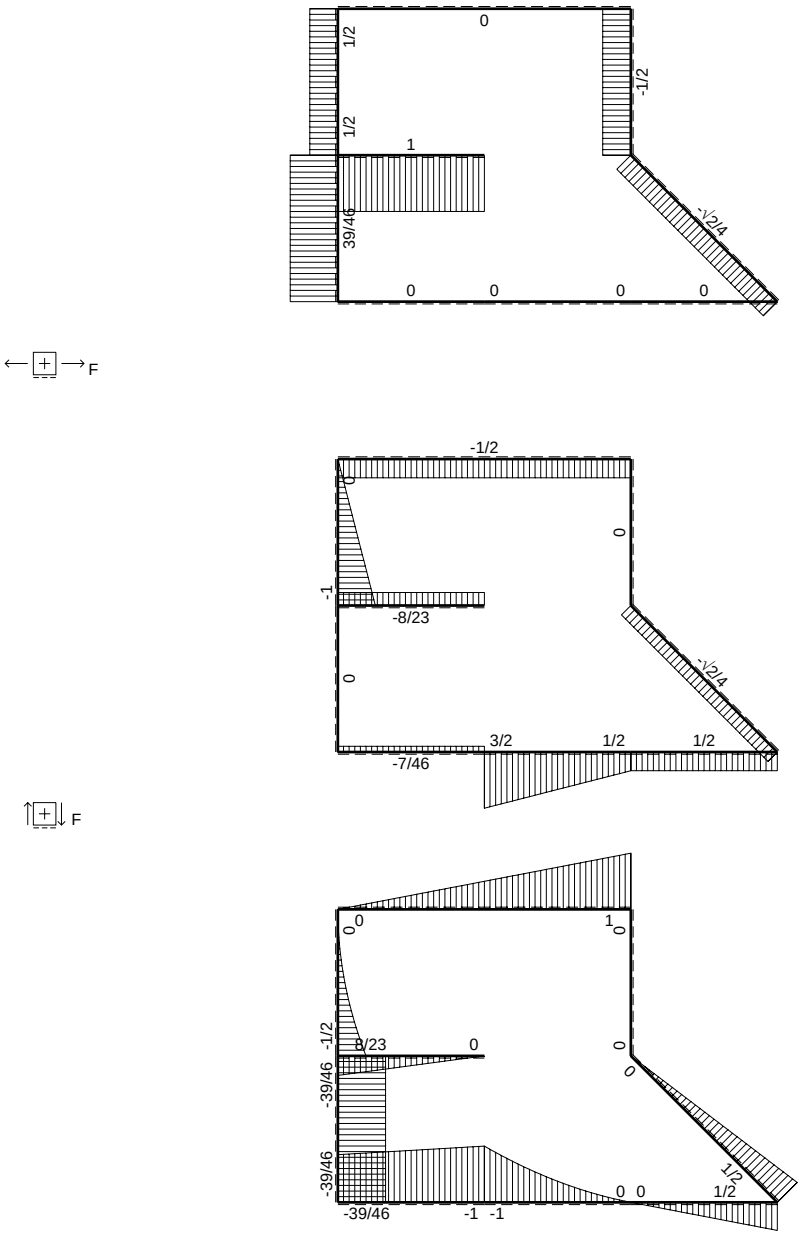
0
1/2
-1/2
1/2
1
39/46
-√2/4
0
0
0
0
F
-1/2
0
0
-1
-8/23
-√2/4
0
3/2
1/2
1/2
-7/46
F
0
1
0
0
-1/2
8/23
0
0
0
-39/46
-39/46
1/2
0
0
1/2
-39/46
-1
-1
Fb

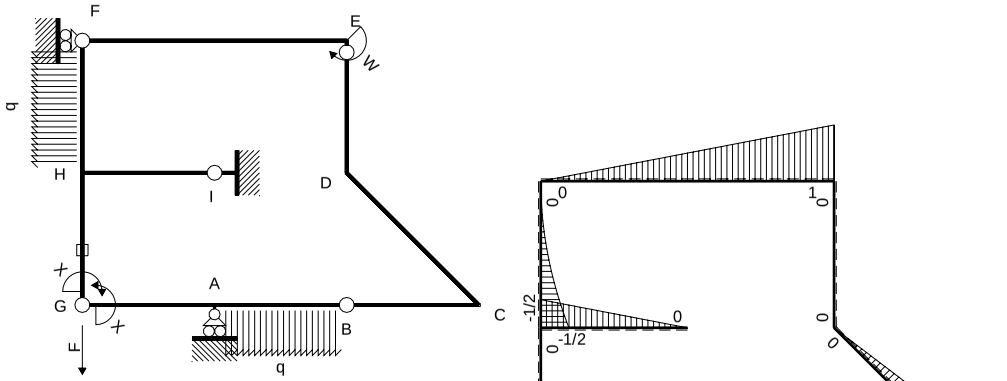

M_0 flessione da carichi assegnati

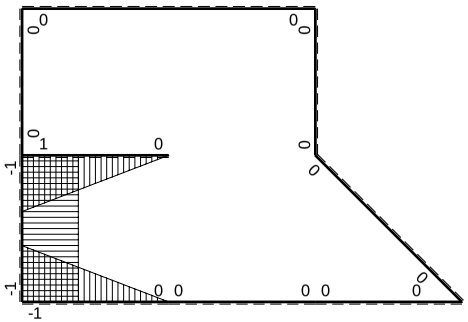

M_x flessione da iperstatica X=1

Quadro contributi PLV per iperstatica $X=W_{GA}$

→	$M_x(x)$	$M_o(x)$	M_xM_o	M_xM_x	$\int M_xM_o/EJdx$	$\int XM_xM_x/EJdx$
AB b	0	$-Fb+3/2Fx-1/2qx^2$	0	0	0	0
BA b	0	$1/2Fx+1/2qx^2$	0	0		
BC b	0	1/2Fx	0	0	0	0
CB b	0	-1/2Fb+1/2Fx	0	0		
CD √2b	0	1/2Fb-√2/4Fx	0	0	0	0
DE b	0	0	0	0	0	0
ED b	0	0	0	0		
EF 2b	0	Fb-1/2Fx	0	0	0	0
FE 2b	0	-1/2Fx	0	0		
GA b	-1+x/b	-Fx	$Fx-Fx^2/b$	$1-2x/b+x^2/b^2$	$1/6Fb^2/EJ$	1/3Xb/EJ
AG b	x/b	Fb-Fx	$Fx-Fx^2/b$	x^2/b^2		
FH b	0	$-1/2qx^2$	0	0	0	0
HF b	0	$1/2Fb-Fx+1/2qx^2$	0	0		
HI b	1-x/b	-1/2Fb+1/2Fx	$-1/2Fb+Fx-1/2Fx^2/b$	$1-2x/b+x^2/b^2$	$-1/6Fb^2/EJ$	1/3Xb/EJ
IH b	-x/b	1/2Fx	$-1/2Fx^2/b$	x^2/b^2		
HG b	-1	0	0	1	0	Xb/EJ
GH b	1	0	0	1		
HG	elongazione asta $N_{1HG}\varepsilon_{HG}L_{HG}$				$-Fb^2/EJ$	
A	molla nodo $-V_{1A}(V_{0A}+XV_{1A})/k_A$				$-5/8Fb^2/EJ$	1/4Xb/EJ
	totali				$-13/8Fb^2/EJ$	23/12Xb/EJ
	iperstatica $X=W_{GA}$				39/46Fb	

Sviluppi di calcolo iperstatica

$L^{XX}_{GA} = \int_o^b (1 - 2\,x/b + x^2/b^2)\ 1/EJ\ dx = [\,x - x^2/b + 1/3\,x^3/b^2\,]_o^b\ 1/EJ$

$= (\,b - b + 1/3\,b\,)\ 1/EJ\ = 1/3\ b/EJ$

$L^{XX}_{AG} = \int_o^b (\,x^2/b^2\,)\ 1/EJ\ dx = [1/3\,x^3/b^2\,]_o^b\ 1/EJ$

$= (1/3\,b\,)\ 1/EJ\ = 1/3\ b/EJ$

$L^{XX}_{HI} = \int_o^b (1 - 2\,x/b + x^2/b^2)\ 1/EJ\ dx = [\,x - x^2/b + 1/3\,x^3/b^2\,]_o^b\ 1/EJ$

$= (\,b - b + 1/3\,b\,)\ 1/EJ\ = 1/3\ b/EJ$

$L^{XX}_{IH} = \int_o^b (\,x^2/b^2\,)\ 1/EJ\ dx = [1/3\,x^3/b^2\,]_o^b\ 1/EJ$

$= (1/3\,b\,)\ 1/EJ\ = 1/3\ b/EJ$

$L^{XX}_{HG} = \int_o^b (1)\ 1/EJ\ dx = [\,x\,]_o^b\ 1/EJ$

$= (\,b\,)\ 1/EJ\ =\ b/EJ$

$L^{XX}_{GH} = \int_o^b (1)\ 1/EJ\ dx = [\,x\,]_o^b\ 1/EJ$

$= (\,b\,)\ 1/EJ\ =\ b/EJ$

$L^{Xo}_{GA} = \int_o^b (\,x/b - x^2/b^2\,)\ Fb\ 1/EJ\ dx = [1/2\,x^2/b - 1/3\,x^3/b^2\,]_o^b\ Fb\ 1/EJ$

$= (1/2\,b - 1/3\,b\,)\ Fb\ 1/EJ\ = 1/6\ Fb^2/EJ$

$L^{Xo}_{AG} = \int_o^b (\,x/b - x^2/b^2\,)\ Fb\ 1/EJ\ dx = [1/2\,x^2/b - 1/3\,x^3/b^2\,]_o^b\ Fb\ 1/EJ$

$= (1/2\,b - 1/3\,b\,)\ Fb\ 1/EJ\ = 1/6\ Fb^2/EJ$

$L^{Xo}_{HI} = \int_o^b (-1/2 + x/b - 1/2\,x^2/b^2\,)\ Fb\ 1/EJ\ dx = [-1/2\,x + 1/2\,x^2/b - 1/6\,x^3/b^2\,]_o^b\ Fb\ 1/EJ$

$= (-1/2\,b + 1/2\,b - 1/6\,b\,)\ Fb\ 1/EJ\ = -1/6\ Fb^2/EJ$

$L^{Xo}_{IH} = \int_o^b (-1/2\,x^2/b^2\,)\ Fb\ 1/EJ\ dx = [-1/6\,x^3/b^2\,]_o^b\ Fb\ 1/EJ$

$= (-1/6\,b\,)\ Fb\ 1/EJ\ = -1/6\ Fb^2/EJ$

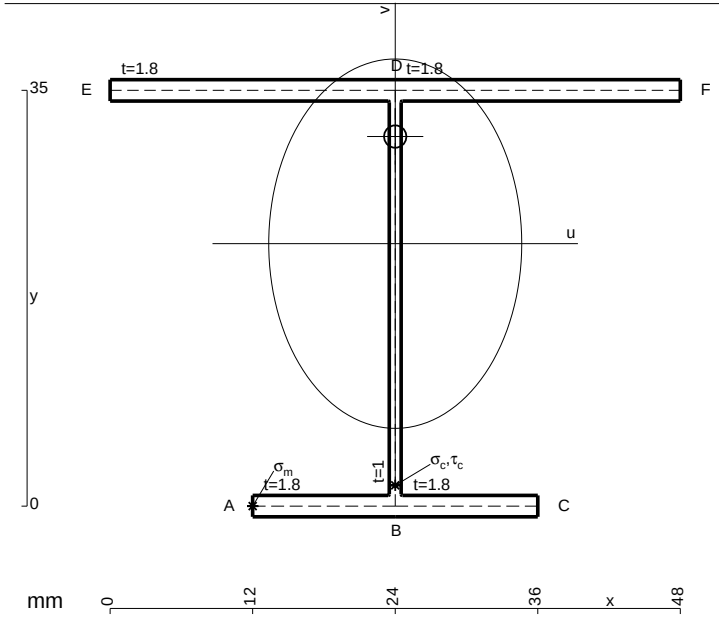

$A = 164.6\ mm^2$

$J_u = 39791.\ mm^4$

$J_v = 18662.\ mm^4$

$J_t = 151.6\ mm^4$

$y_o = 9.018\ mm$

$y_g = 22.09\ mm$

$T_y = 1170.\ N$

$M_x = -374400.\ Nmm$

$x_m = 12.\ mm$

$u_m = -12.\ mm$

$v_m = -22.09\ mm$

$\sigma_m = -Mv/J_u = -207.9\ N/mm^2$

$x_c = 24.\ mm$

$v_c = -22.09\ mm$

$\sigma_c = -Mv/J_u = -207.9\ N/mm^2$

$\tau_c = TS^*/tJ_u = 28.06\ N/mm^2$

$\tau_g = TS^*/tJ_u = 28.06\ N/mm^2$

$t_c = 780.\ mm$

$\sigma_o = \sqrt{\sigma^2 + 3\tau^2} = 213.5\ N/mm^2$

ESΣ05.xxxx.036

@ Adolfo Zavelani Rossi, Politecnico di Milano, vers.27.03.13 01.12.25

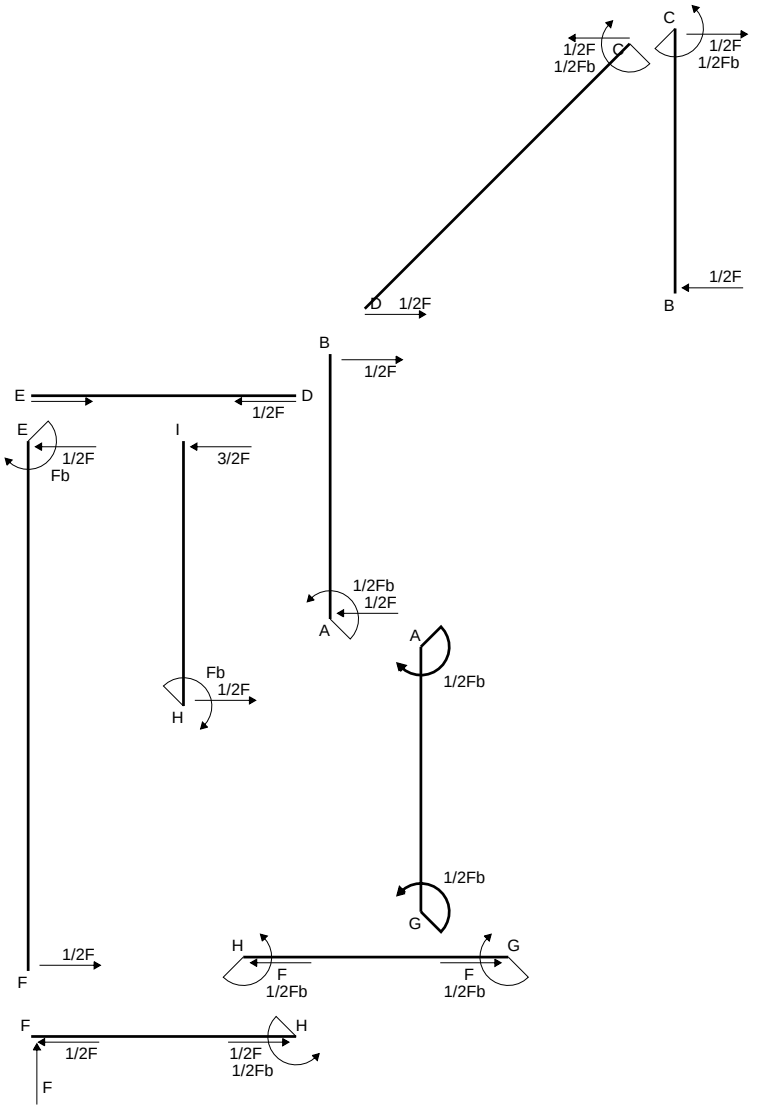
C
1/2F
1/2Fb
C
1/2F
1/2Fb
D
1/2F
B
1/2F
B
1/2F
E
D
1/2F
E
1/2F
Fb
I
3/2F
1/2Fb
1/2F
A
A
1/2Fb
Fb
1/2F
H
1/2Fb
G
1/2F
F
H
F
1/2Fb
G
F
1/2Fb
F
1/2F
F
1/2F
H
1/2F
1/2Fb
F

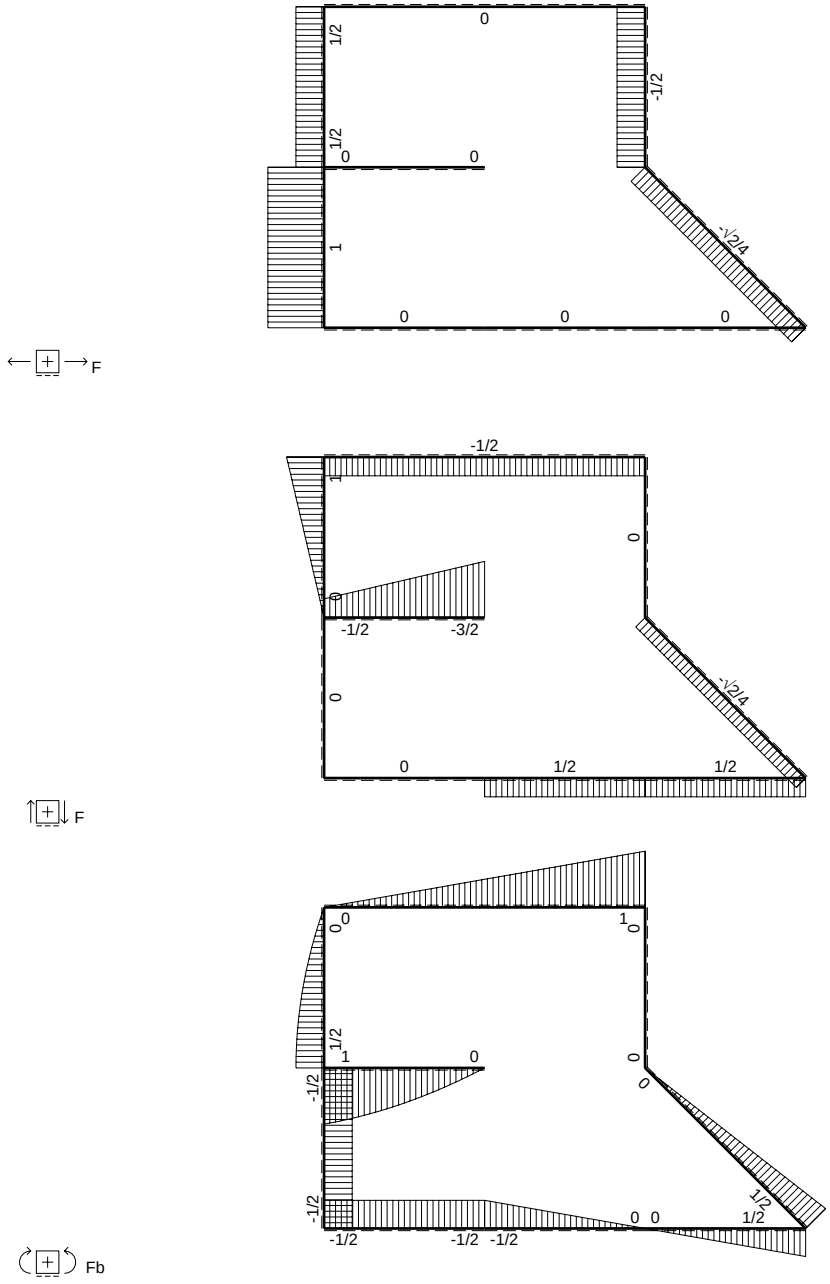
F
0
1/2
-1/2
1/2
0
0
1
-√2/4
0
0
0
F
-1/2
1
0
0
-1/2
-3/2
0
-√2/4
0
1/2
1/2
Fb
0
0
1
0
1/2
1
0
0
-1/2
0
0
1/2
-1/2
-1/2
-1/2

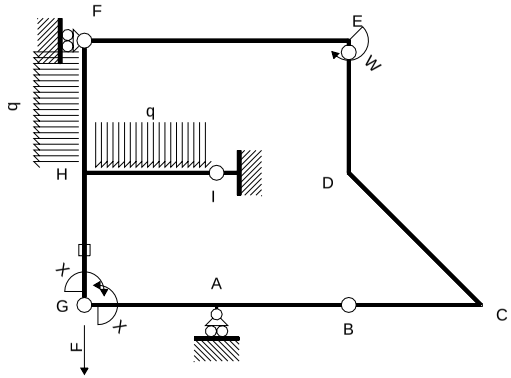

Schema di calcolo iperstatico

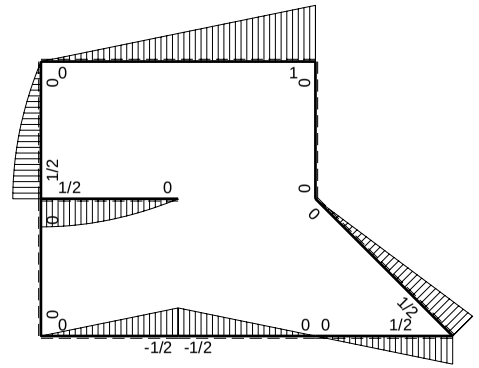

M_0 flessione da carichi assegnati

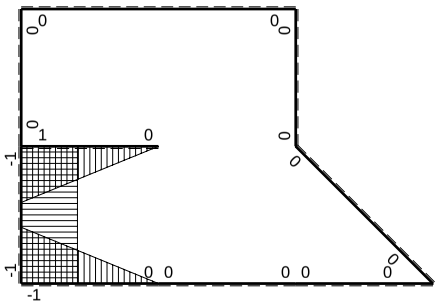

M_x flessione da iperstatica X=1

PROCEDIMENTO E RISULTATI 239217 ESΣ05.xxxx.037

@ Adolfo Zavelani Rossi, Politecnico di Milano, vers.27.03.13 01.12.25

Quadro contributi PLV per iperstatica $X=W_{GA}$

→	$M_x(x)$	$M_0(x)$	M_xM_0	M_xM_x	$\int M_xM_0/EJdx$	$\int XM_xM_x/EJdx$
AB b	0	-1/2Fb+1/2Fx	0	0	0	0
BA b	0	1/2Fx	0	0		
BC b	0	1/2Fx	0	0	0	0
CB b	0	-1/2Fb+1/2Fx	0	0		
CD √2b	0	1/2Fb-√2/4Fx	0	0	0	0
DE b	0	0	0	0	0	0
ED b	0	0	0	0		
EF 2b	0	Fb-1/2Fx	0	0	0	0
FE 2b	0	-1/2Fx	0	0		
GA b	-1+x/b	-1/2Fx	$1/2Fx-1/2Fx^2/b$	$1-2x/b+x^2/b^2$	$1/12Fb^2/EJ$	1/3Xb/EJ
AG b	x/b	1/2Fb-1/2Fx	$1/2Fx-1/2Fx^2/b$	x^2/b^2		
FH b	0	$Fx-1/2qx^2$	0	0	0	0
HF b	0	$-1/2Fb+1/2qx^2$	0	0		
HI b	1-x/b	$1/2Fb-1/2qx^2$	$1/2Fb-1/2Fx-1/2Fx^2/b+1/2qx^3/b$	$1-2x/b+x^2/b^2$	$5/24Fb^2/EJ$	1/3Xb/EJ
IH b	-x/b	$-Fx+1/2qx^2$	$Fx^2/b-1/2qx^3/b$	x^2/b^2		
HG b	-1	0	0	1	0	Xb/EJ
GH b	1	0	0	1		
HG	elongazione asta $N_{1HG}\varepsilon_{HG}L_{HG}$				$-Fb^2/EJ$	
A	molla nodo $-V_{1A}(V_{0A}+XV_{1A})/k_A$				$-1/4Fb^2/EJ$	1/4Xb/EJ
	totali				$-23/24Fb^2/EJ$	23/12Xb/EJ
	iperstatica $X=W_{GA}$				1/2Fb	

PROCEDIMENTO E RISULTATI 239217 ESΣ05.xxxx.037

Sviluppi di calcolo iperstatica

@ Adolfo Zavelani Rossi, Politecnico di Milano, vers.27.03.13 01.12.25

$L^{XX}_{GA} = \int_o^b (1 - 2\,x/b + x^2/b^2)\ 1/EJ\ dx = [\ x - x^2/b + 1/3\ x^3/b^2\ ]_o^b\ 1/EJ$

$= (\ b - b + 1/3\ b\ )\ 1/EJ\ = 1/3\ b/EJ$

$L^{XX}_{AG} = \int_o^b (\ x^2/b^2\ )\ 1/EJ\ dx = [1/3\ x^3/b^2\ ]_o^b\ 1/EJ$

$= (1/3\ b\ )\ 1/EJ\ = 1/3\ b/EJ$

$L^{XX}_{HI} = \int_o^b (1 - 2\,x/b + x^2/b^2)\ 1/EJ\ dx = [\ x - x^2/b + 1/3\ x^3/b^2\ ]_o^b\ 1/EJ$

$= (\ b - b + 1/3\ b\ )\ 1/EJ\ = 1/3\ b/EJ$

$L^{XX}_{IH} = \int_o^b (\ x^2/b^2\ )\ 1/EJ\ dx = [1/3\ x^3/b^2\ ]_o^b\ 1/EJ$

$= (1/3\ b\ )\ 1/EJ\ = 1/3\ b/EJ$

$L^{XX}_{HG} = \int_o^b (1\ )\ 1/EJ\ dx = [\ x\ ]_o^b\ 1/EJ$

$= (\ b\ )\ 1/EJ\ =\ b/EJ$

$L^{XX}_{GH} = \int_o^b (1\ )\ 1/EJ\ dx = [\ x\ ]_o^b\ 1/EJ$

$= (\ b\ )\ 1/EJ\ =\ b/EJ$

$L^{Xo}_{GA} = \int_o^b (1/2\ x/b - 1/2\ x^2/b^2\ )\ Fb\ 1/EJ\ dx = [1/4\ x^2/b - 1/6\ x^3/b^2\ ]_o^b\ Fb\ 1/EJ$

$= (1/4\ b - 1/6\ b\ )\ Fb\ 1/EJ\ = 1/12\ \ Fb^2/EJ$

$L^{Xo}_{AG} = \int_o^b (1/2\ x/b - 1/2\ x^2/b^2\ )\ Fb\ 1/EJ\ dx = [1/4\ x^2/b - 1/6\ x^3/b^2\ ]_o^b\ Fb\ 1/EJ$

$= (1/4\ b - 1/6\ b\ )\ Fb\ 1/EJ\ = 1/12\ \ Fb^2/EJ$

$L^{Xo}_{HI} = \int_o^b (1/2 - 1/2\ x/b - 1/2\ x^2/b^2 + 1/2\ x^3/b^3\ )\ Fb\ 1/EJ\ dx$

$= [1/2\ x - 1/4\ x^2/b - 1/6\ x^3/b^2 + 1/8\ x^4/b^3\ ]_o^b\ Fb\ 1/EJ$

$= (1/2\ b - 1/4\ b - 1/6\ b + 1/8\ b\ )\ Fb\ 1/EJ\ = 5/24\ \ Fb^2/EJ$

$L^{Xo}_{IH} = \int_o^b (\ x^2/b^2 - 1/2\ x^3/b^3\ )\ Fb\ 1/EJ\ dx = [1/3\ x^3/b^2 - 1/8\ x^4/b^3\ ]_o^b\ Fb\ 1/EJ$

$= (1/3\ b - 1/8\ b\ )\ Fb\ 1/EJ\ = 5/24\ \ Fb^2/EJ$

PROCEDIMENTO E RISULTATI 239217 ESΣ05.xxxx.037

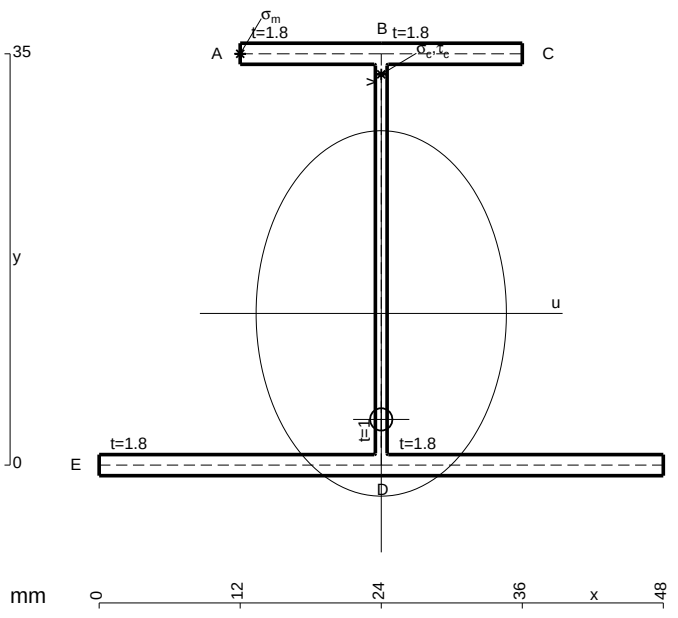

$A = 164.6\ mm^2$
$J_u = 39791.\ mm^4$
$J_v = 18662.\ mm^4$
$J_t = 151.6\ mm^4$
$y_o = -9.018\ mm$
$y_g = 12.91\ mm$
$T_y = -385.\ N$
$M_x = 392700.\ Nmm$
$x_m = 12.\ mm$
$y_m = 35.\ mm$
$u_m = -12.\ mm$
$v_m = 22.09\ mm$
$\sigma_m = -Mv/J_u = -218.\ N/mm^2$
$x_c = 24.\ mm$
$y_c = 35.\ mm$
$v_c = 22.09\ mm$
$\sigma_c = -Mv/J_u = -218.\ N/mm^2$
$\tau_c = TS^*/tJ_u = 9.235\ N/mm^2$
$\tau_g = TS^*/tJ_u = 9.235\ N/mm^2$
$t_c = 770.\ mm$
$\sigma_o = \sqrt{\sigma^2 + 3\tau^2} = 218.6\ N/mm^2$

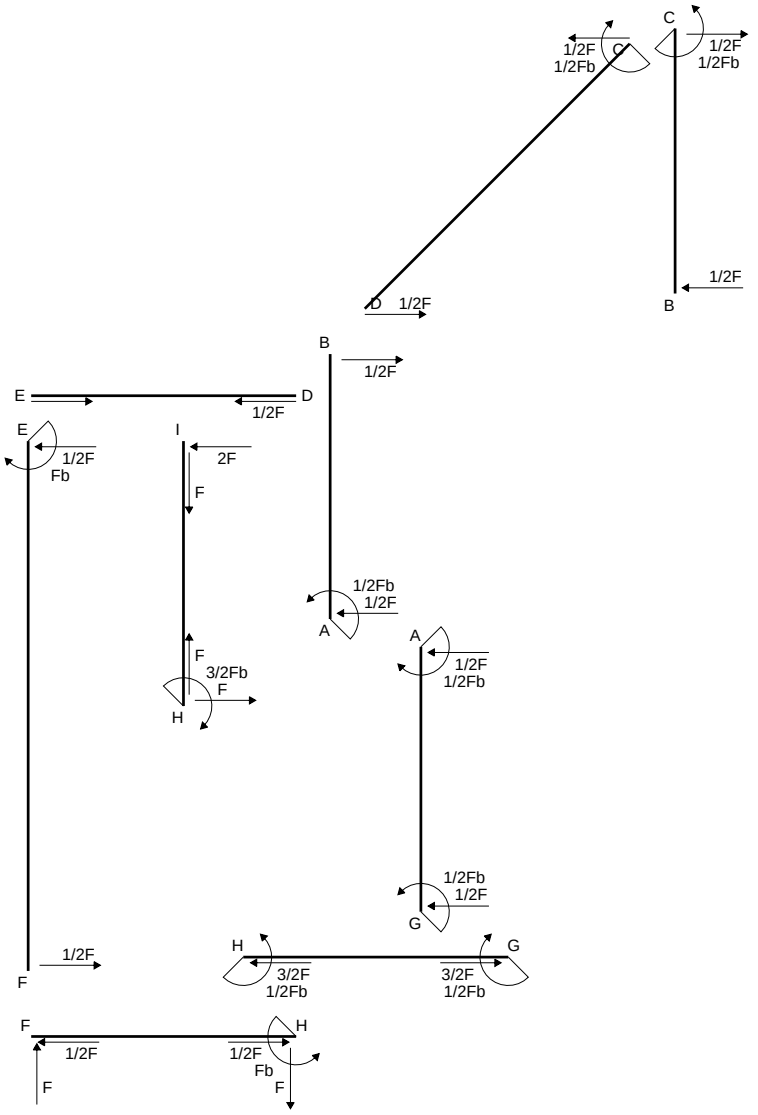
C
1/2F
1/2Fb
C
1/2F
1/2Fb
1/2F
D 1/2F
B
B
1/2F
E
D
1/2F
E
1/2F
Fb
I
2F
F
1/2Fb
1/2F
A
A
1/2F
1/2Fb
F
3/2Fb
F
H
1/2Fb
1/2F
G
1/2F
F
H
G
3/2F
1/2Fb
3/2F
1/2Fb
F
1/2F
H
1/2F
Fb
F
F

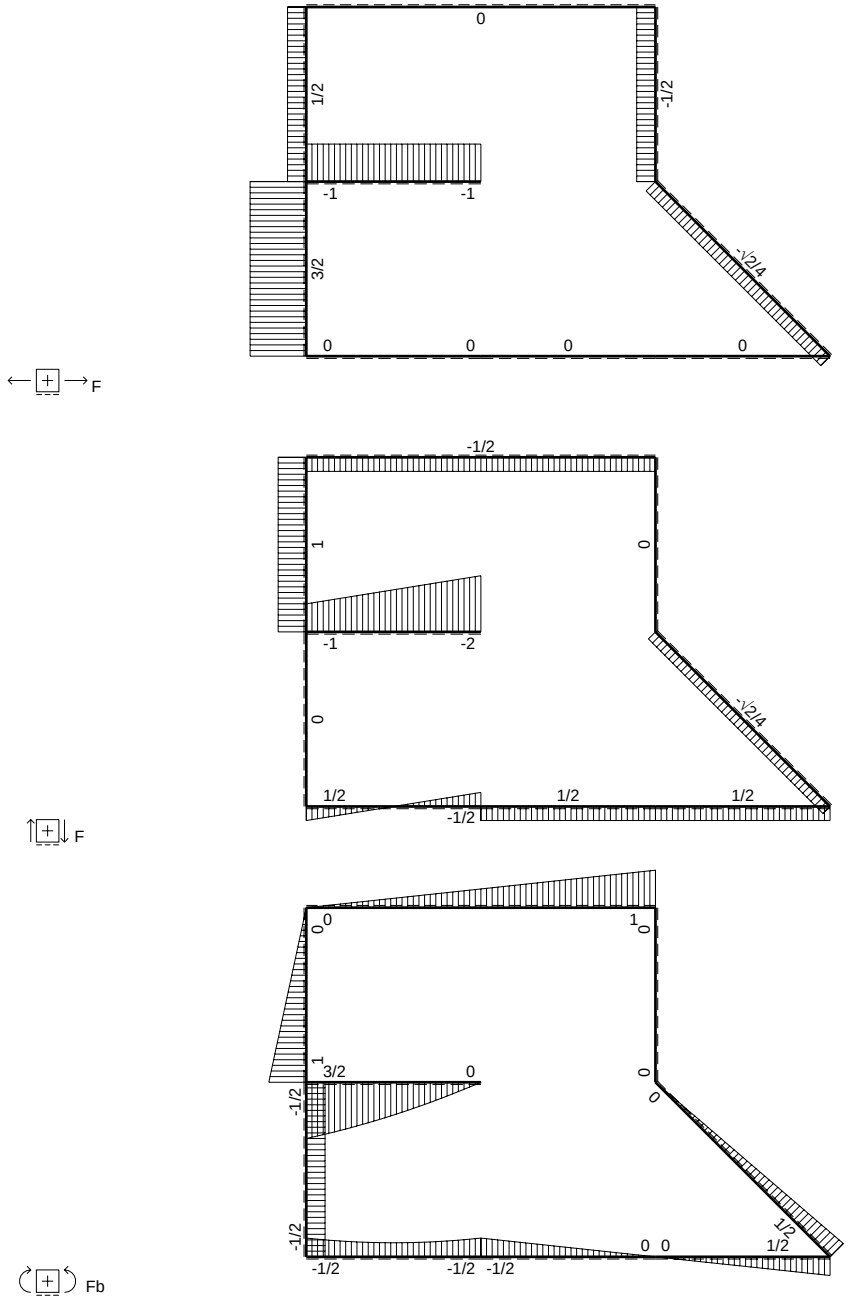
0
1/2
-1/2
-1
-1
3/2
-½/4
0
0
0
0
F
-1/2
1
0
-1
-2
0
-½/4
1/2
1/2
1/2
-1/2
F
0
1
0
0
1
3/2
0
-1/2
0
0
-1/2
1/2
0 0
1/2
-1/2
-1/2 -1/2
Fb

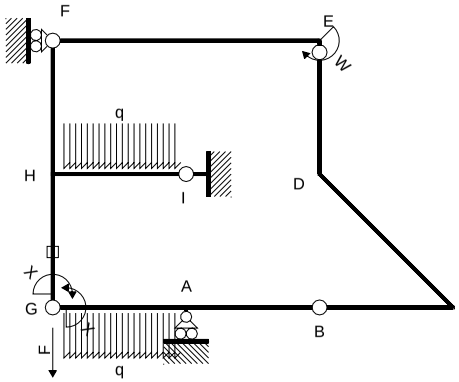

Schema di calcolo iperstatico

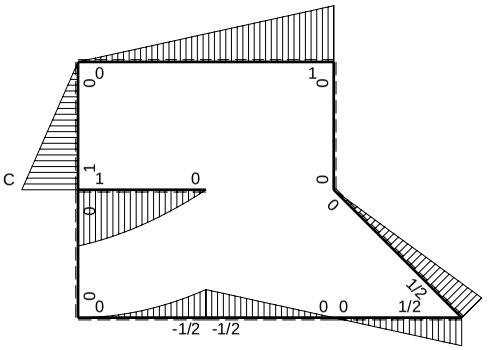

M_0 flessione da carichi assegnati

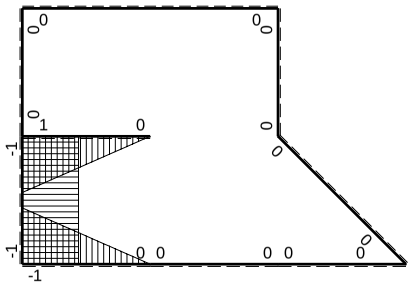

M_x flessione da iperstatica X=1

Quadro contributi PLV per iperstatica $X=W_{GA}$

→	$M_x(x)$	$M_o(x)$	M_xM_o	M_xM_x	$\int M_xM_o/EJdx$	$\int XM_xM_x/EJdx$
AB b	0	-1/2Fb+1/2Fx	0	0	0	0
BA b	0	1/2Fx	0	0		
BC b	0	1/2Fx	0	0	0	0
CB b	0	-1/2Fb+1/2Fx	0	0		
CD √2b	0	1/2Fb-√2/4Fx	0	0	0	0
DE b	0	0	0	0	0	0
ED b	0	0	0	0		
EF 2b	0	Fb-1/2Fx	0	0	0	0
FE 2b	0	-1/2Fx	0	0		
GA b	-1+x/b	$-1/2qx^2$	$1/2Fx^2/b-1/2qx^3/b$	$1-2x/b+x^2/b^2$	$1/24Fb^2/EJ$	1/3Xb/EJ
AG b	x/b	$1/2Fb-Fx+1/2qx^2$	$1/2Fx-Fx^2/b+1/2qx^3/b$	x^2/b^2		
FH b	0	Fx	0	0	0	0
HF b	0	-Fb+Fx	0	0		
HI b	1-x/b	$Fb-1/2Fx-1/2qx^2$	$Fb-3/2Fx+1/2qx^3/b$	$1-2x/b+x^2/b^2$	$3/8Fb^2/EJ$	1/3Xb/EJ
IH b	-x/b	$-3/2Fx+1/2qx^2$	$3/2Fx^2/b-1/2qx^3/b$	x^2/b^2		
HG b	-1	0	0	1	0	Xb/EJ
GH b	1	0	0	1		
HG	elongazione asta $N_{1HG}\varepsilon_{HG}L_{HG}$				$-Fb^2/EJ$	
A	molla nodo $-V_{1A}(V_{0A}+XV_{1A})/k_A$				$-3/8Fb^2/EJ$	1/4Xb/EJ
	totali				$-23/24Fb^2/EJ$	23/12Xb/EJ
	iperstatica $X=W_{GA}$				1/2Fb	

Sviluppi di calcolo iperstatica

$L^{XX}_{GA} = \int_o^b (1 - 2\,x/b + x^2/b^2)\ 1/EJ\ dx = [\,x - x^2/b + 1/3\,x^3/b^2\,]_o^b\ 1/EJ$

$= (\,b - b + 1/3\,b\,)\ 1/EJ = 1/3\ b/EJ$

$L^{XX}_{AG} = \int_o^b (\,x^2/b^2\,)\ 1/EJ\ dx = [1/3\,x^3/b^2\,]_o^b\ 1/EJ$

$= (1/3\,b)\ 1/EJ = 1/3\ b/EJ$

$L^{XX}_{HI} = \int_o^b (1 - 2\,x/b + x^2/b^2)\ 1/EJ\ dx = [\,x - x^2/b + 1/3\,x^3/b^2\,]_o^b\ 1/EJ$

$= (\,b - b + 1/3\,b\,)\ 1/EJ = 1/3\ b/EJ$

$L^{XX}_{IH} = \int_o^b (\,x^2/b^2\,)\ 1/EJ\ dx = [1/3\,x^3/b^2\,]_o^b\ 1/EJ$

$= (1/3\,b)\ 1/EJ = 1/3\ b/EJ$

$L^{XX}_{HG} = \int_o^b (1)\ 1/EJ\ dx = [\,x\,]_o^b\ 1/EJ$

$= (\,b\,)\ 1/EJ = b/EJ$

$L^{XX}_{GH} = \int_o^b (1)\ 1/EJ\ dx = [\,x\,]_o^b\ 1/EJ$

$= (\,b\,)\ 1/EJ = b/EJ$

$L^{Xo}_{GA} = \int_o^b (1/2\,x^2/b^2 - 1/2\,x^3/b^3)\ Fb\ 1/EJ\ dx = [1/6\,x^3/b^2 - 1/8\,x^4/b^3\,]_o^b\ Fb\ 1/EJ$

$= (1/6\,b - 1/8\,b)\ Fb\ 1/EJ = 1/24\ Fb^2/EJ$

$L^{Xo}_{AG} = \int_o^b (1/2\,x/b - x^2/b^2 + 1/2\,x^3/b^3)\ Fb\ 1/EJ\ dx = [1/4\,x^2/b - 1/3\,x^3/b^2 + 1/8\,x^4/b^3\,]_o^b\ Fb\ 1/EJ$

$= (1/4\,b - 1/3\,b + 1/8\,b)\ Fb\ 1/EJ = 1/24\ Fb^2/EJ$

$L^{Xo}_{HI} = \int_o^b (1 - 3/2\,x/b + 1/2\,x^3/b^3)\ Fb\ 1/EJ\ dx = [\,x - 3/4\,x^2/b + 1/8\,x^4/b^3\,]_o^b\ Fb\ 1/EJ$

$= (\,b - 3/4\,b + 1/8\,b\,)\ Fb\ 1/EJ = 3/8\ Fb^2/EJ$

$L^{Xo}_{IH} = \int_o^b (3/2\,x^2/b^2 - 1/2\,x^3/b^3)\ Fb\ 1/EJ\ dx = [1/2\,x^3/b^2 - 1/8\,x^4/b^3\,]_o^b\ Fb\ 1/EJ$

$= (1/2\,b - 1/8\,b)\ Fb\ 1/EJ = 3/8\ Fb^2/EJ$

PROCEDIMENTO E RISULTATI 238594 ESΣ05.xxxx.038

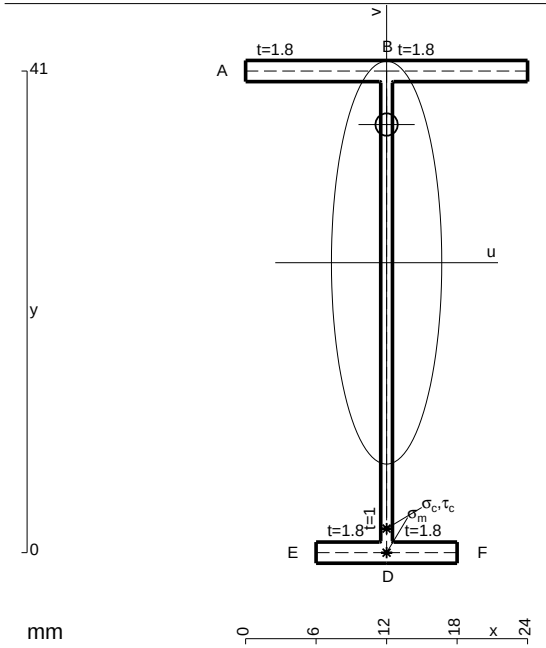

A = 105.8 mm^2
J_u = 31122. mm^4
J_v = 2333. mm^4
J_t = 83.65 mm^4
y_o = 11.76 mm
y_g = 24.69 mm
N = 225. N
T_y = 450. N
M_x = 283500. Nmm
x_m = 12. mm
v_m = -24.69 mm
$\sigma_m = N/A - Mv/J_u$ = 227. N/mm^2
y_c = 3. mm
u_c = -12. mm
v_c = -21.69 mm
$\sigma_c = N/A - Mv/J_u$ = 227. N/mm^2
$\tau_c = TS^*/tJ_u$ = 7.71 N/mm^2
$\tau_g = TS^*/tJ_u$ = 7.71 N/mm^2
t_c = 450. mm
$\sigma_o = \sqrt{\sigma^2 + 3\tau^2}$ = 227.4 N/mm^2

@ Adolfo Zavelani Rossi, Politecnico di Milano, vers.27.03.13 01.12.25

ESΣ05.xxxx.038

@ Adolfo Zavelani Rossi, Politecnico di Milano, vers.27.03.13 01.12.25

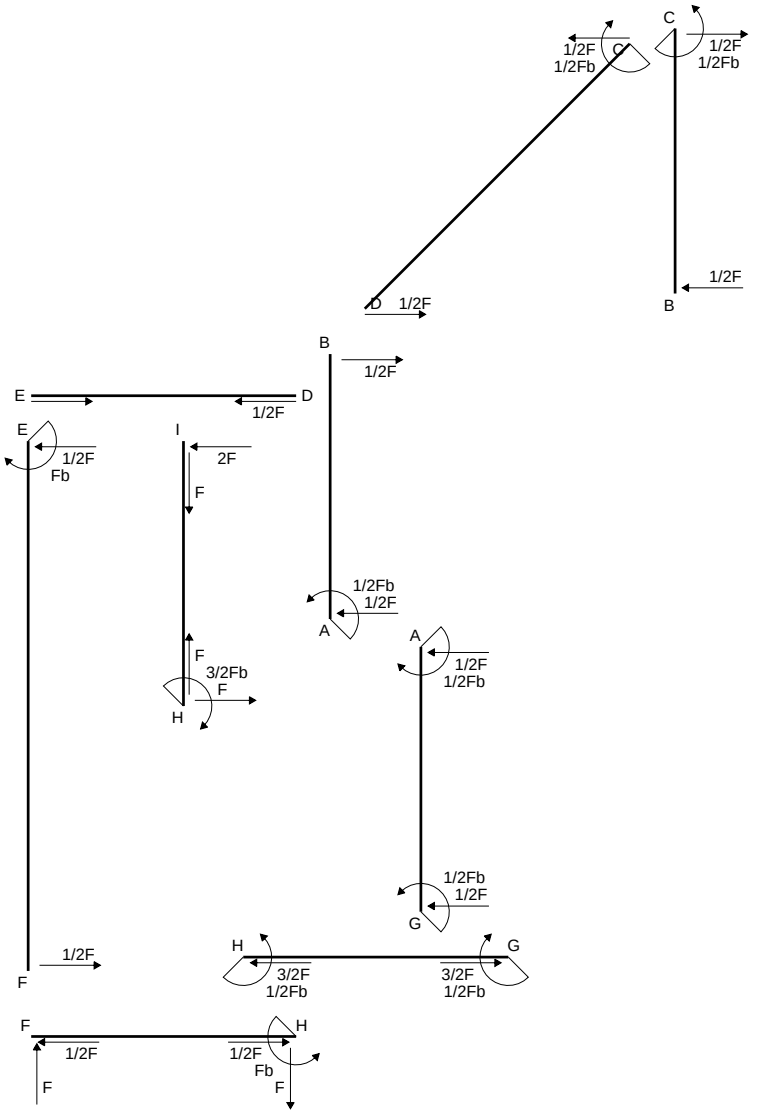
C
1/2F
1/2Fb
C
1/2F
1/2Fb
D 1/2F
B
1/2F
B
1/2F
E
D
1/2F
E
1/2F
Fb
I
2F
F
F
3/2Fb
F
H
1/2Fb
1/2F
A
A
1/2F
1/2Fb
1/2Fb
1/2F
G
1/2F
F
H
3/2F
1/2Fb
G
3/2F
1/2Fb
F
1/2F
F
H
1/2F
Fb
1/2F
F

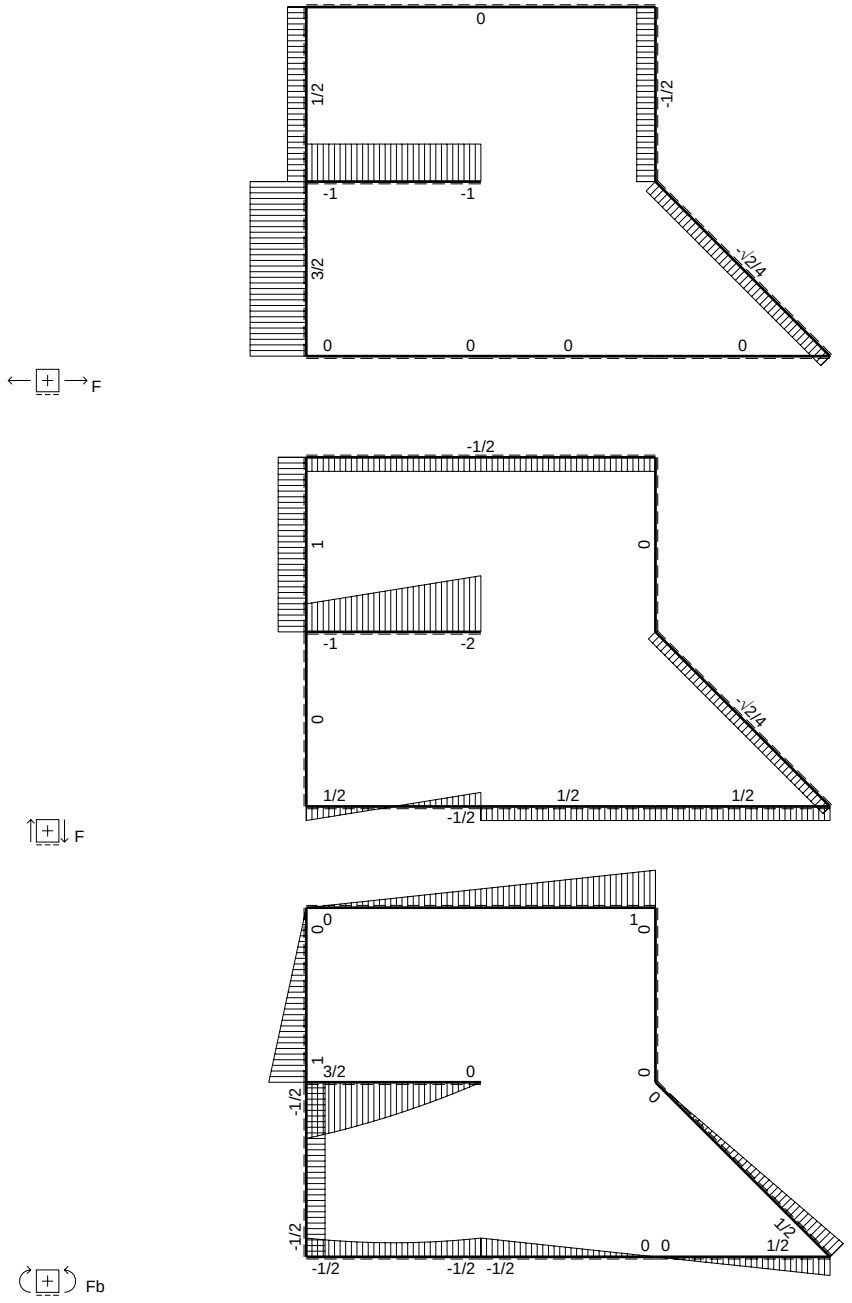
F
0
1/2
-1/2
-1
-1
3/2
-½/4
0
0
0
0
F
-1/2
1
0
-1
-2
0
-½/4
1/2
1/2
1/2
-1/2
Fb
0
1
0
0
1
3/2
0
-1/2
0
0
-1/2
1/2
0 0
1/2
-1/2
-1/2 -1/2

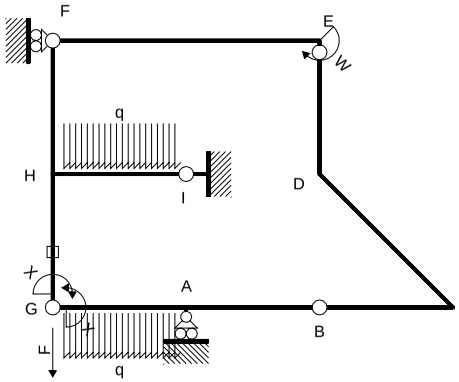

Schema di calcolo iperstatico

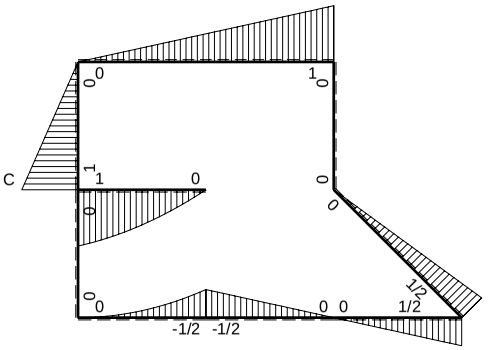

M_0 flessione da carichi assegnati

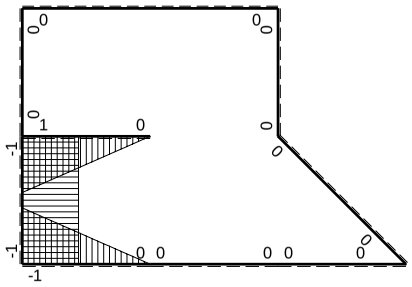

M_x flessione da iperstatica X=1

Quadro contributi PLV per iperstatica $X=W_{GA}$

→	$M_x(x)$	$M_o(x)$	M_xM_o	M_xM_x	$\int M_xM_o/EJdx$	$\int XM_xM_x/EJdx$
AB b	0	-1/2Fb+1/2Fx	0	0	0	0
BA b	0	1/2Fx	0	0		
BC b	0	1/2Fx	0	0	0	0
CB b	0	-1/2Fb+1/2Fx	0	0		
CD √2b	0	1/2Fb-√2/4Fx	0	0	0	0
DE b	0	0	0	0	0	0
ED b	0	0	0	0		
EF 2b	0	Fb-1/2Fx	0	0	0	0
FE 2b	0	-1/2Fx	0	0		
GA b	-1+x/b	$-1/2qx^2$	$1/2Fx^2/b-1/2qx^3/b$	$1-2x/b+x^2/b^2$	$1/24Fb^2/EJ$	1/3Xb/EJ
AG b	x/b	$1/2Fb-Fx+1/2qx^2$	$1/2Fx-Fx^2/b+1/2qx^3/b$	x^2/b^2		
FH b	0	Fx	0	0	0	0
HF b	0	-Fb+Fx	0	0		
HI b	1-x/b	$Fb-1/2Fx-1/2qx^2$	$Fb-3/2Fx+1/2qx^3/b$	$1-2x/b+x^2/b^2$	$3/8Fb^2/EJ$	1/3Xb/EJ
IH b	-x/b	$-3/2Fx+1/2qx^2$	$3/2Fx^2/b-1/2qx^3/b$	x^2/b^2		
HG b	-1	0	0	1	0	Xb/EJ
GH b	1	0	0	1		
HG	elongazione asta $N_{1HG}\varepsilon_{HG}L_{HG}$				$-Fb^2/EJ$	
A	molla nodo $-V_{1A}(V_{0A}+XV_{1A})/k_A$				$-3/8Fb^2/EJ$	1/4Xb/EJ
	totali				$-23/24Fb^2/EJ$	23/12Xb/EJ
	iperstatica $X=W_{GA}$				1/2Fb	

Sviluppi di calcolo iperstatica

$L^{XX}_{GA} = \int_o^b (1 - 2\,x/b + x^2/b^2)\ 1/EJ\ dx = [\ x - x^2/b + 1/3\ x^3/b^2\ ]_o^b\ 1/EJ$

$= (\ b - b + 1/3\ b\ )\ 1/EJ\ = 1/3\ b/EJ$

$L^{XX}_{AG} = \int_o^b (\ x^2/b^2\ )\ 1/EJ\ dx = [1/3\ x^3/b^2\ ]_o^b\ 1/EJ$

$= (1/3\ b\ )\ 1/EJ\ = 1/3\ b/EJ$

$L^{XX}_{HI} = \int_o^b (1 - 2\,x/b + x^2/b^2)\ 1/EJ\ dx = [\ x - x^2/b + 1/3\ x^3/b^2\ ]_o^b\ 1/EJ$

$= (\ b - b + 1/3\ b\ )\ 1/EJ\ = 1/3\ b/EJ$

$L^{XX}_{IH} = \int_o^b (\ x^2/b^2\ )\ 1/EJ\ dx = [1/3\ x^3/b^2\ ]_o^b\ 1/EJ$

$= (1/3\ b\ )\ 1/EJ\ = 1/3\ b/EJ$

$L^{XX}_{HG} = \int_o^b (1\ )\ 1/EJ\ dx = [\ x\ ]_o^b\ 1/EJ$

$= (\ b\ )\ 1/EJ\ =\ b/EJ$

$L^{XX}_{GH} = \int_o^b (1\ )\ 1/EJ\ dx = [\ x\ ]_o^b\ 1/EJ$

$= (\ b\ )\ 1/EJ\ =\ b/EJ$

$L^{Xo}_{GA} = \int_o^b (1/2\ x^2/b^2 - 1/2\ x^3/b^3\ )\ Fb\ 1/EJ\ dx = [1/6\ x^3/b^2 - 1/8\ x^4/b^3\ ]_o^b\ Fb\ 1/EJ$

$= (1/6\ b - 1/8\ b\ )\ Fb\ 1/EJ\ = 1/24\ \ Fb^2/EJ$

$L^{Xo}_{AG} = \int_o^b (1/2\ x/b - x^2/b^2 + 1/2\ x^3/b^3\ )\ Fb\ 1/EJ\ dx = [1/4\ x^2/b - 1/3\ x^3/b^2 + 1/8\ x^4/b^3\ ]_o^b\ Fb\ 1/EJ$

$= (1/4\ b - 1/3\ b + 1/8\ b\ )\ Fb\ 1/EJ\ = 1/24\ \ Fb^2/EJ$

$L^{Xo}_{HI} = \int_o^b (1 - 3/2\ x/b + 1/2\ x^3/b^3\ )\ Fb\ 1/EJ\ dx = [\ x - 3/4\ x^2/b + 1/8\ x^4/b^3\ ]_o^b\ Fb\ 1/EJ$

$= (\ b - 3/4\ b + 1/8\ b\ )\ Fb\ 1/EJ\ = 3/8\ \ Fb^2/EJ$

$L^{Xo}_{IH} = \int_o^b (3/2\ x^2/b^2 - 1/2\ x^3/b^3\ )\ Fb\ 1/EJ\ dx = [1/2\ x^3/b^2 - 1/8\ x^4/b^3\ ]_o^b\ Fb\ 1/EJ$

$= (1/2\ b - 1/8\ b\ )\ Fb\ 1/EJ\ = 3/8\ \ Fb^2/EJ$

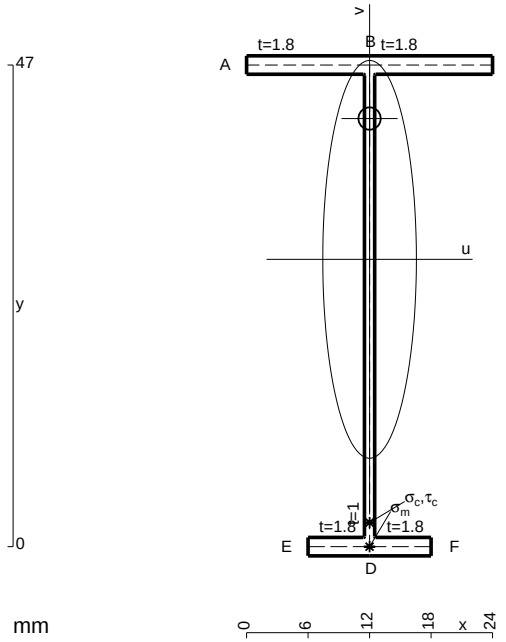

A = 111.8 mm^2
J_u = 42133. mm^4
J_v = 2333. mm^4
J_t = 85.65 mm^4
y_o = 13.74 mm
y_g = 28.04 mm
N = 235. N
T_y = 470. N
M_x = 357200. Nmm
x_m = 12. mm
v_m = -28.04 mm
$\sigma_m = N/A - Mv/J_u$ = 239.8 N/mm^2
y_c = 3. mm
u_c = -12. mm
v_c = -25.04 mm
$\sigma_c = N/A - Mv/J_u$ = 239.8 N/mm^2
$\tau_c = TS^*/tJ_u$ = 6.756 N/mm^2
$\tau_g = TS^*/tJ_u$ = 6.756 N/mm^2
t_c = 470. mm
$\sigma_o = \sqrt{\sigma^2 + 3\tau^2}$ = 240.1 N/mm^2

ESΣ05.xxxx.039

@ Adolfo Zavelani Rossi, Politecnico di Milano, vers.27.03.13 01.12.25

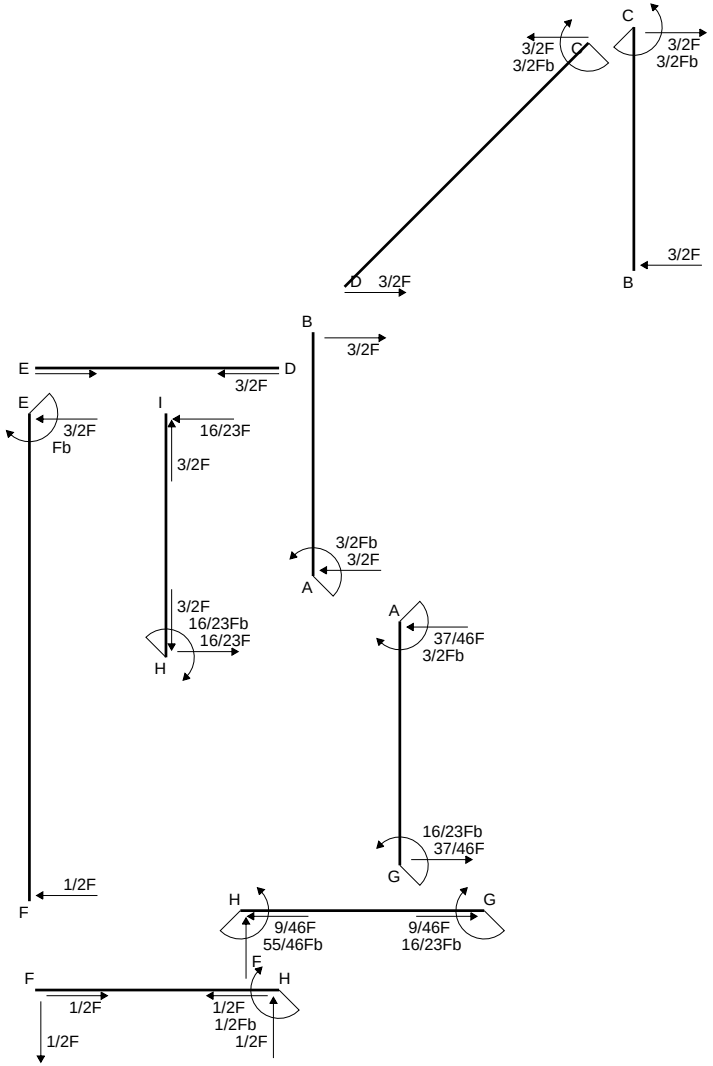
C
3/2F
3/2Fb
C
3/2F
3/2Fb
3/2F
D
3/2F
B
B
3/2F
E
D
3/2F
E
3/2F
Fb
I
16/23F
3/2F
3/2Fb
3/2F
A
3/2F
16/23Fb
16/23F
H
A
37/46F
3/2Fb
16/23Fb
37/46F
G
1/2F
F
H
G
9/46F
55/46Fb
9/46F
16/23Fb
F
H
F
1/2F
1/2F
1/2Fb
1/2F
1/2F

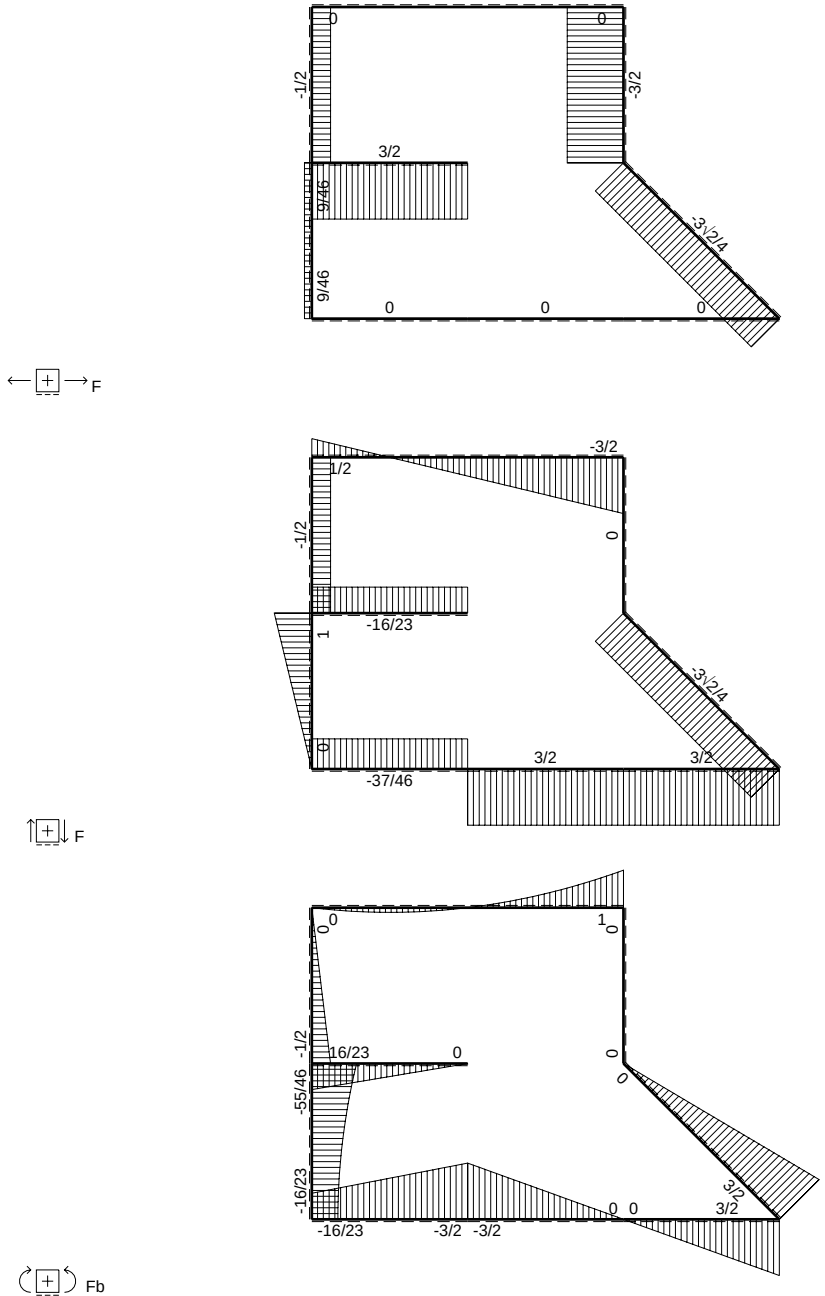
0
0
-1/2
-3/2
3/2
9/46
-3/2/4
9/46
0
0
0
F
-3/2
1/2
-1/2
0
-16/23
1
-3/2/4
0
3/2
3/2
-37/46
F
0
0
1
0
-1/2
16/23
0
0
0
-55/46
-16/23
0
0
3/2
-16/23
-3/2
-3/2
Fb

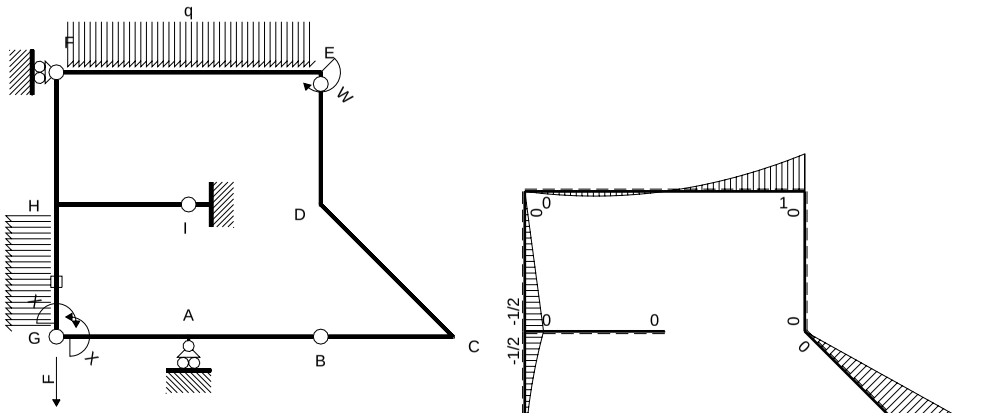

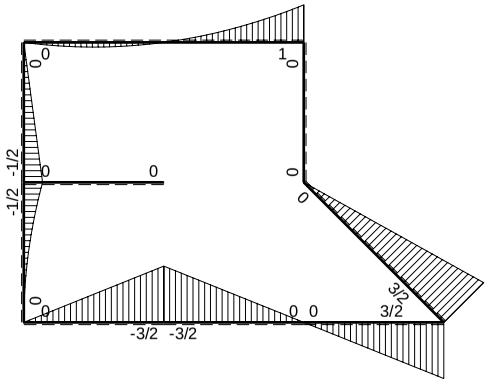

M_0 flessione da carichi assegnati

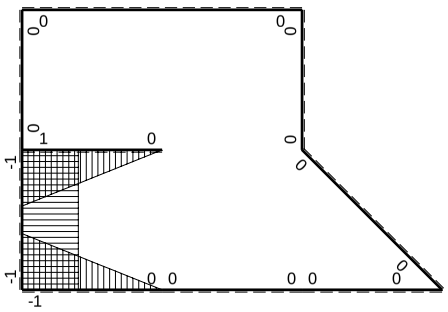

M_x flessione da iperstatica X=1

Quadro contributi PLV per iperstatica $X=W_{GA}$

→	$M_x(x)$	$M_o(x)$	M_xM_o	M_xM_x	$\int M_xM_o/EJdx$	$\int XM_xM_x/EJdx$
AB b	0	-3/2Fb+3/2Fx	0	0	0	0
BA b	0	3/2Fx	0	0		
BC b	0	3/2Fx	0	0	0	0
CB b	0	-3/2Fb+3/2Fx	0	0		
CD √2b	0	3/2Fb-3√2/4Fx	0	0	0	0
DE b	0	0	0	0	0	0
ED b	0	0	0	0		
EF 2b	0	$Fb-3/2Fx+1/2qx^2$	0	0	0	0
FE 2b	0	$1/2Fx-1/2qx^2$	0	0		
GA b	-1+x/b	-3/2Fx	$3/2Fx-3/2Fx^2/b$	$1-2x/b+x^2/b^2$	$1/4Fb^2/EJ$	1/3Xb/EJ
AG b	x/b	3/2Fb-3/2Fx	$3/2Fx-3/2Fx^2/b$	x^2/b^2		
FH b	0	-1/2Fx	0	0	0	0
HF b	0	1/2Fb-1/2Fx	0	0		
HI b	1-x/b	0	0	$1-2x/b+x^2/b^2$	0	1/3Xb/EJ
IH b	-x/b	0	0	x^2/b^2		
HG b	-1	$-1/2Fb+Fx-1/2qx^2$	$1/2Fb-Fx+1/2Fx^2/b$	1	$1/6Fb^2/EJ$	Xb/EJ
GH b	1	$1/2qx^2$	$1/2Fx^2/b$	1		
HG	elongazione asta $N_{1HG}\varepsilon_{HG}L_{HG}$				$-Fb^2/EJ$	
A	molla nodo $-V_{1A}(V_{0A}+XV_{1A})/k_A$				$-3/4Fb^2/EJ$	1/4Xb/EJ
	totali				$-4/3Fb^2/EJ$	23/12Xb/EJ
	iperstatica $X=W_{GA}$				16/23Fb	

Sviluppi di calcolo iperstatica

$L^{XX}_{GA} = \int_o^b (1 - 2\,x/b + x^2/b^2)\ 1/EJ\ dx = [\,x - x^2/b + 1/3\,x^3/b^2\,]_o^b\ 1/EJ$

$= (\,b - b + 1/3\,b\,)\ 1/EJ = 1/3\ b/EJ$

$L^{XX}_{AG} = \int_o^b (\,x^2/b^2\,)\ 1/EJ\ dx = [1/3\,x^3/b^2\,]_o^b\ 1/EJ$

$= (1/3\,b\,)\ 1/EJ = 1/3\ b/EJ$

$L^{XX}_{HI} = \int_o^b (1 - 2\,x/b + x^2/b^2)\ 1/EJ\ dx = [\,x - x^2/b + 1/3\,x^3/b^2\,]_o^b\ 1/EJ$

$= (\,b - b + 1/3\,b\,)\ 1/EJ = 1/3\ b/EJ$

$L^{XX}_{IH} = \int_o^b (\,x^2/b^2\,)\ 1/EJ\ dx = [1/3\,x^3/b^2\,]_o^b\ 1/EJ$

$= (1/3\,b\,)\ 1/EJ = 1/3\ b/EJ$

$L^{XX}_{HG} = \int_o^b (1)\ 1/EJ\ dx = [\,x\,]_o^b\ 1/EJ$

$= (\,b\,)\ 1/EJ = b/EJ$

$L^{XX}_{GH} = \int_o^b (1)\ 1/EJ\ dx = [\,x\,]_o^b\ 1/EJ$

$= (\,b\,)\ 1/EJ = b/EJ$

$L^{Xo}_{GA} = \int_o^b (3/2\,x/b - 3/2\,x^2/b^2)\ Fb\ 1/EJ\ dx = [3/4\,x^2/b - 1/2\,x^3/b^2\,]_o^b\ Fb\ 1/EJ$

$= (3/4\,b - 1/2\,b\,)\ Fb\ 1/EJ = 1/4\ Fb^2/EJ$

$L^{Xo}_{AG} = \int_o^b (3/2\,x/b - 3/2\,x^2/b^2\,)\ Fb\ 1/EJ\ dx = [3/4\,x^2/b - 1/2\,x^3/b^2\,]_o^b\ Fb\ 1/EJ$

$= (3/4\,b - 1/2\,b\,)\ Fb\ 1/EJ = 1/4\ Fb^2/EJ$

$L^{Xo}_{HG} = \int_o^b (1/2 - x/b + 1/2\,x^2/b^2\,)\ Fb\ 1/EJ\ dx - 1\ \ (-1)\ \ (-1)\ \ Fb^2/EJ$

$= [1/2\,x - 1/2\,x^2/b + 1/6\,x^3/b^2\,]_o^b\ Fb\ 1/EJ\ -\ 1\ \ (-1)\ \ (-1)\ \ Fb^2/EJ$

$= (1/2\,b - 1/2\,b + 1/6\,b\,)\ Fb\ 1/EJ\ -\ 1\ \ (-1)\ \ (-1)\ \ Fb^2/EJ = -5/6\ \ Fb^2/EJ$

$L^{Xo}_{GH} = \int_o^b (1/2\,x^2/b^2\,)\ Fb\ 1/EJ\ dx - 1\ \ (-1)\ \ (-1)\ \ Fb^2/EJ = [1/6\,x^3/b^2\,]_o^b\ Fb\ 1/EJ\ -\ 1\ \ (-1)\ \ (-1)\ \ Fb^2/EJ$

$= (1/6\,b\,)\ Fb\ 1/EJ\ -\ 1\ \ (-1)\ \ (-1)\ \ Fb^2/EJ = -5/6\ \ Fb^2/EJ$

PROCEDIMENTO E RISULTATI 238922 ESΣ05.xxxx.040

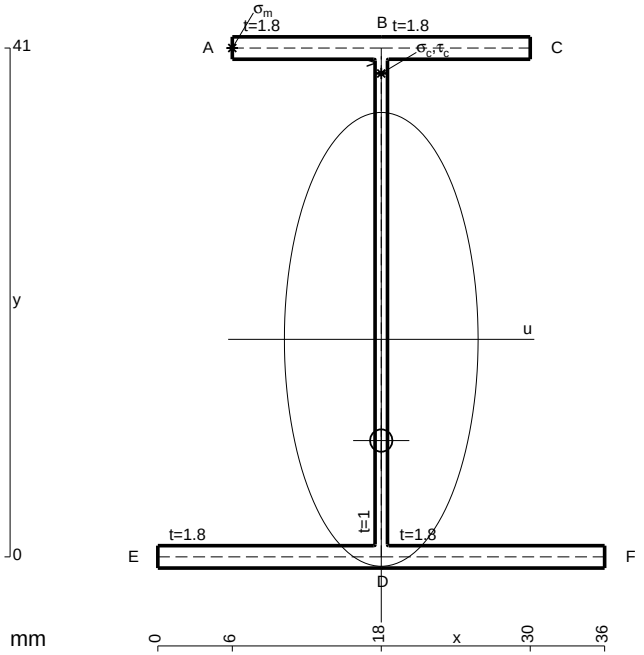

A = 149. mm^2
J_u = 49815. mm^4
J_v = 9072. mm^4
J_t = 130.3 mm^4
y_o = -8.157 mm
y_g = 17.53 mm
T_y = 1200. N
M_x = -420000. Nmm
x_m = 6. mm
y_m = 41. mm
u_m = -12. mm
v_m = 23.47 mm
$\sigma_m = -Mv/J_u$ = 197.9 N/mm^2
x_c = 18. mm
y_c = 41. mm
v_c = 23.47 mm
$\sigma_c = -Mv/J_u$ = 197.9 N/mm^2
$\tau_c = TS^*/tJ_u$ = 24.43 N/mm^2
$\tau_g = TS^*/tJ_u$ = 24.43 N/mm^2
t_c = 800. mm
$\sigma_o = \sqrt{\sigma^2 + 3\tau^2}$ = 202.4 N/mm^2

@ Adolfo Zavelani Rossi, Politecnico di Milano, vers.27.03.13 01.12.25

ESΣ05.xxxx.040

@ Adolfo Zavelani Rossi, Politecnico di Milano, vers.27.03.13 01.12.25

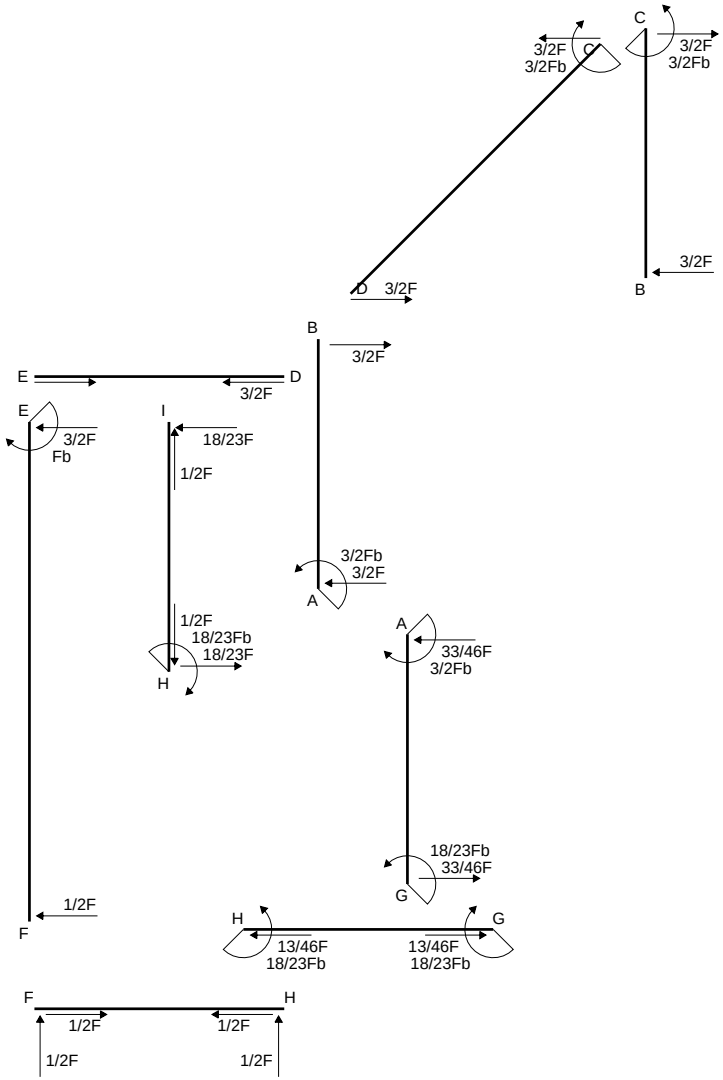
C
3/2F
3/2Fb
C
3/2F
3/2Fb
3/2F
D 3/2F
B
B
3/2F
E
D
3/2F
E
3/2F
Fb
I
18/23F
1/2F
3/2Fb
3/2F
A
1/2F
18/23Fb
18/23F
H
A
33/46F
3/2Fb
18/23Fb
33/46F
G
1/2F
F
H
G
13/46F
18/23Fb
13/46F
18/23Fb
F
H
1/2F
1/2F
1/2F
1/2F

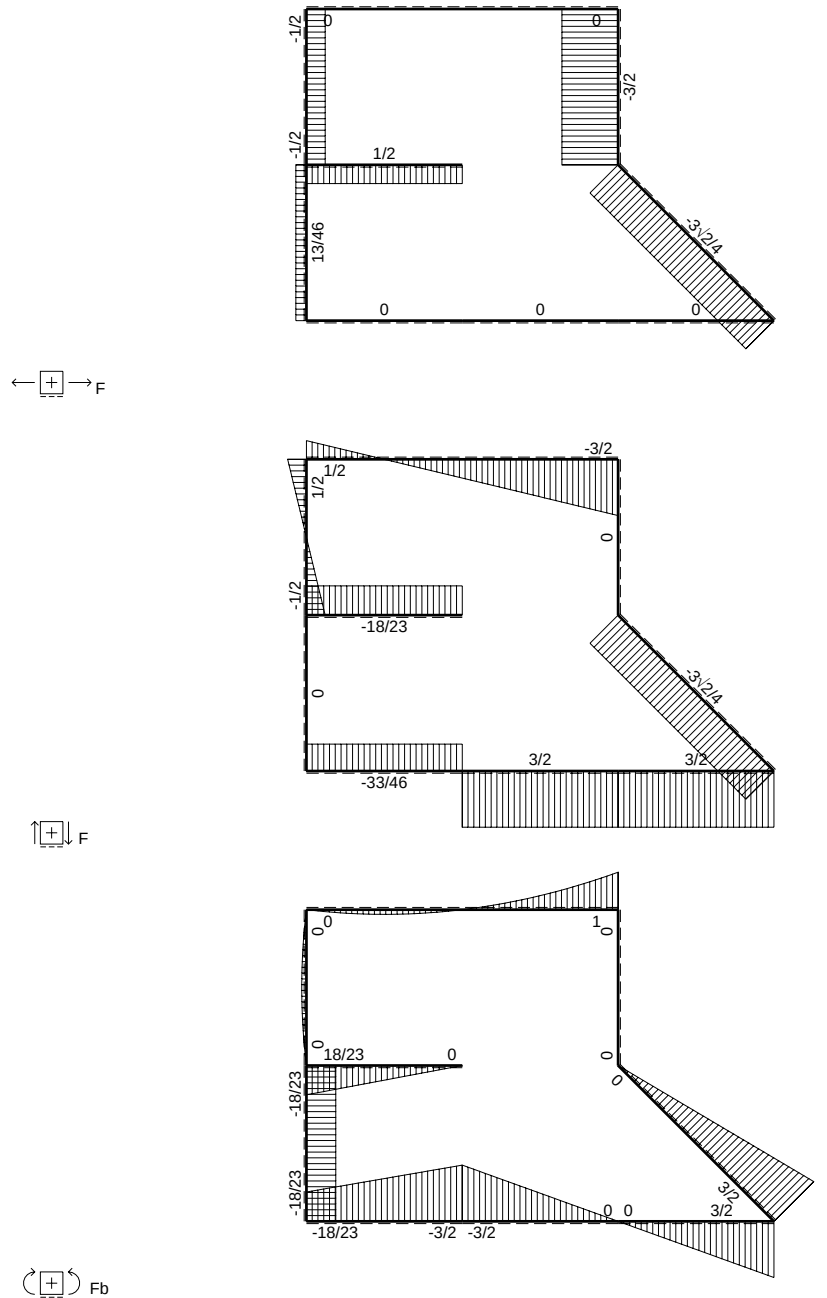
-1/2
0
0
-3/2
-1/2
1/2
-3√2/4
13/46
0
0
0
F
-3/2
1/2
1/2
0
-1/2
-18/23
-3√2/4
0
3/2
3/2
-33/46
F
0
1
0
0
0
18/23
0
0
0
-18/23
-18/23
3/2
0 0
3/2
-18/23
-3/2 -3/2
Fb

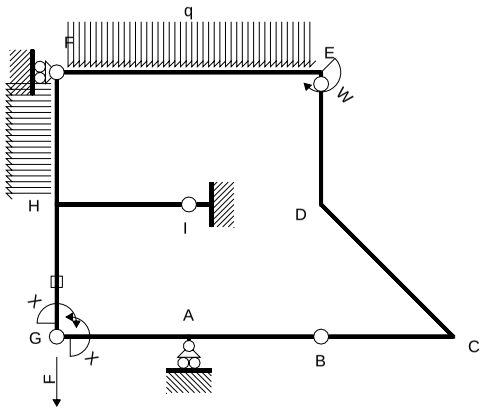

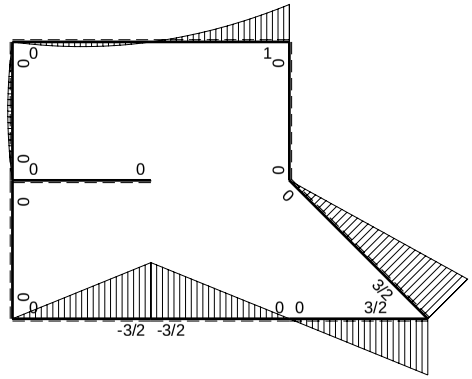

M_0 flessione da carichi assegnati

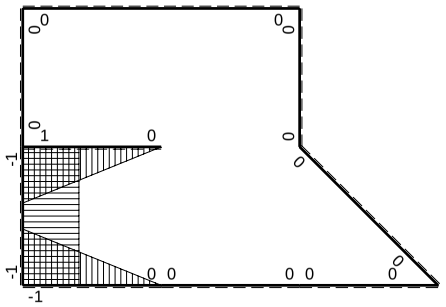

M_x flessione da iperstatica X=1

Quadro contributi PLV per iperstatica $X=W_{GA}$

→	$M_x(x)$	$M_0(x)$	M_xM_0	M_xM_x	$\int M_xM_0/EJdx$	$\int XM_xM_x/EJdx$
AB b	0	-3/2Fb+3/2Fx	0	0	0	0
BA b	0	3/2Fx	0	0		
BC b	0	3/2Fx	0	0	0	0
CB b	0	-3/2Fb+3/2Fx	0	0		
CD √2b	0	3/2Fb-3√2/4Fx	0	0	0	0
DE b	0	0	0	0	0	0
ED b	0	0	0	0		
EF 2b	0	$Fb-3/2Fx+1/2qx^2$	0	0	0	0
FE 2b	0	$1/2Fx-1/2qx^2$	0	0		
GA b	-1+x/b	-3/2Fx	$3/2Fx-3/2Fx^2/b$	$1-2x/b+x^2/b^2$	$1/4Fb^2/EJ$	1/3Xb/EJ
AG b	x/b	3/2Fb-3/2Fx	$3/2Fx-3/2Fx^2/b$	x^2/b^2		
FH b	0	$1/2Fx-1/2qx^2$	0	0	0	0
HF b	0	$-1/2Fx+1/2qx^2$	0	0		
HI b	1-x/b	0	0	$1-2x/b+x^2/b^2$	0	1/3Xb/EJ
IH b	-x/b	0	0	x^2/b^2		
HG b	-1	0	0	1	0	Xb/EJ
GH b	1	0	0	1		
HG	elongazione asta $N_{1HG}\varepsilon_{HG}L_{HG}$				$-Fb^2/EJ$	
A	molla nodo $-V_{1A}(V_{0A}+XV_{1A})/k_A$				$-3/4Fb^2/EJ$	1/4Xb/EJ
	totali				$-3/2Fb^2/EJ$	23/12Xb/EJ
	iperstatica $X=W_{GA}$				18/23Fb	

Sviluppi di calcolo iperstatica

$$L^{XX}_{GA} = \int_o^b (1 - 2\,x/b + x^2/b^2)\ 1/EJ\ dx = [\,x - x^2/b + 1/3\,x^3/b^2\,]_o^b\ 1/EJ$$
$$= (\,b - b + 1/3\,b\,)\ 1/EJ\ = 1/3\ b/EJ$$

$$L^{XX}_{AG} = \int_o^b (\,x^2/b^2\,)\ 1/EJ\ dx = [1/3\,x^3/b^2\,]_o^b\ 1/EJ$$
$$= (1/3\,b\,)\ 1/EJ\ = 1/3\ b/EJ$$

$$L^{XX}_{HI} = \int_o^b (1 - 2\,x/b + x^2/b^2)\ 1/EJ\ dx = [\,x - x^2/b + 1/3\,x^3/b^2\,]_o^b\ 1/EJ$$
$$= (\,b - b + 1/3\,b\,)\ 1/EJ\ = 1/3\ b/EJ$$

$$L^{XX}_{IH} = \int_o^b (\,x^2/b^2\,)\ 1/EJ\ dx = [1/3\,x^3/b^2\,]_o^b\ 1/EJ$$
$$= (1/3\,b\,)\ 1/EJ\ = 1/3\ b/EJ$$

$$L^{XX}_{HG} = \int_o^b (1)\ 1/EJ\ dx = [\,x\,]_o^b\ 1/EJ$$
$$= (\,b\,)\ 1/EJ\ =\ b/EJ$$

$$L^{XX}_{GH} = \int_o^b (1)\ 1/EJ\ dx = [\,x\,]_o^b\ 1/EJ$$
$$= (\,b\,)\ 1/EJ\ =\ b/EJ$$

$$L^{Xo}_{GA} = \int_o^b (3/2\,x/b - 3/2\,x^2/b^2)\ Fb\ 1/EJ\ dx = [3/4\,x^2/b - 1/2\,x^3/b^2\,]_o^b\ Fb\ 1/EJ$$
$$= (3/4\,b - 1/2\,b\,)\ Fb\ 1/EJ\ = 1/4\ Fb^2/EJ$$

$$L^{Xo}_{AG} = \int_o^b (3/2\,x/b - 3/2\,x^2/b^2\,)\ Fb\ 1/EJ\ dx = [3/4\,x^2/b - 1/2\,x^3/b^2\,]_o^b\ Fb\ 1/EJ$$
$$= (3/4\,b - 1/2\,b\,)\ Fb\ 1/EJ\ = 1/4\ Fb^2/EJ$$

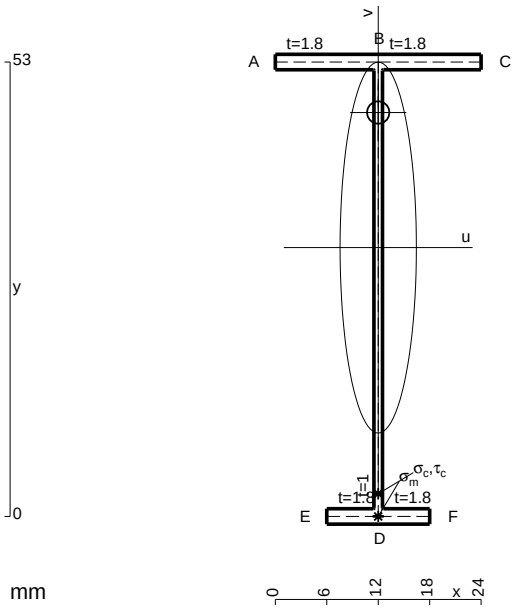

A = 117.8 mm^2
J_u = 55131. mm^4
J_v = 2333. mm^4
J_t = 87.65 mm^4
y_o = 15.75 mm
y_g = 31.36 mm
T_y = 750. N
M_x = -367500. Nmm
x_m = 12. mm
v_m = -31.36 mm
$\sigma_m = -Mv/J_u$ = -209. N/mm^2
y_c = 3. mm
u_c = -12. mm
v_c = -28.36 mm
$\sigma_c = -Mv/J_u$ = -209. N/mm^2
$\tau_c = TS^*/tJ_u$ = 9.215 N/mm^2
$\tau_g = TS^*/tJ_u$ = 9.215 N/mm^2
t_c = 500. mm
$\sigma_o = \sqrt{\sigma^2 + 3\tau^2}$ = 209.6 N/mm^2

ESΣ05.xxxx.041

@ Adolfo Zavelani Rossi, Politecnico di Milano, vers.27.03.13 01.12.25

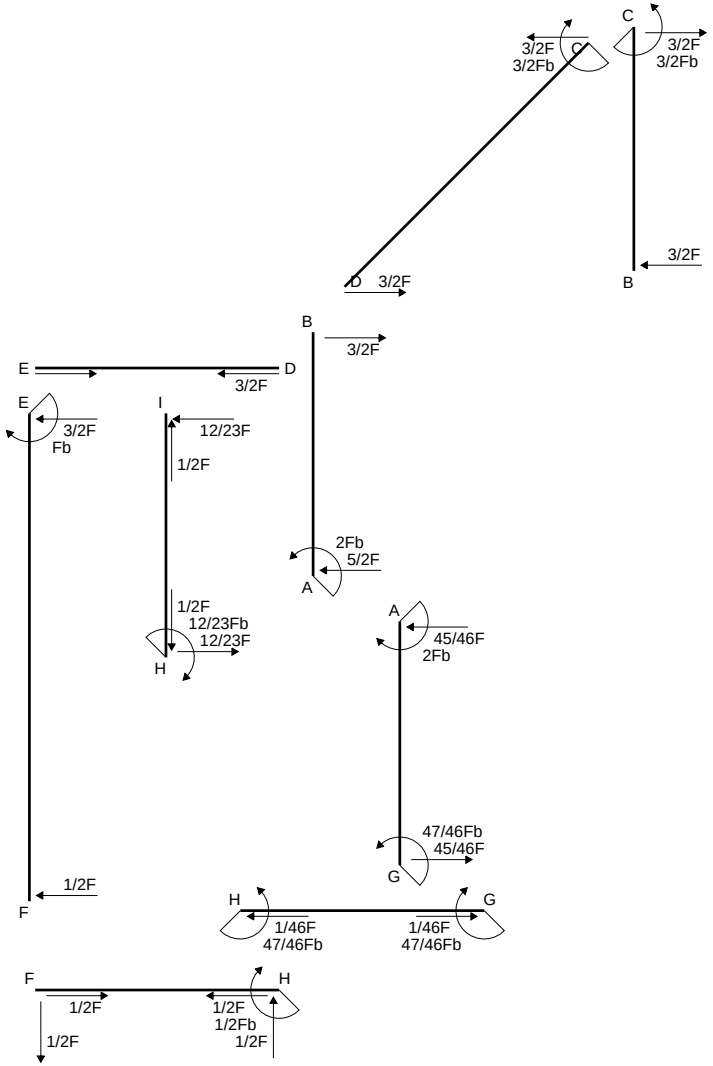
C
3/2F
3/2Fb
C
3/2F
3/2Fb
3/2F
D 3/2F
B
B
3/2F
E
D
3/2F
E
3/2F
Fb
I
12/23F
1/2F
2Fb
5/2F
A
1/2F
12/23Fb
12/23F
H
A
45/46F
2Fb
47/46Fb
45/46F
G
1/2F
F
H
G
1/46F
47/46Fb
1/46F
47/46Fb
F
1/2F
H
1/2F
1/2Fb
1/2F
1/2F

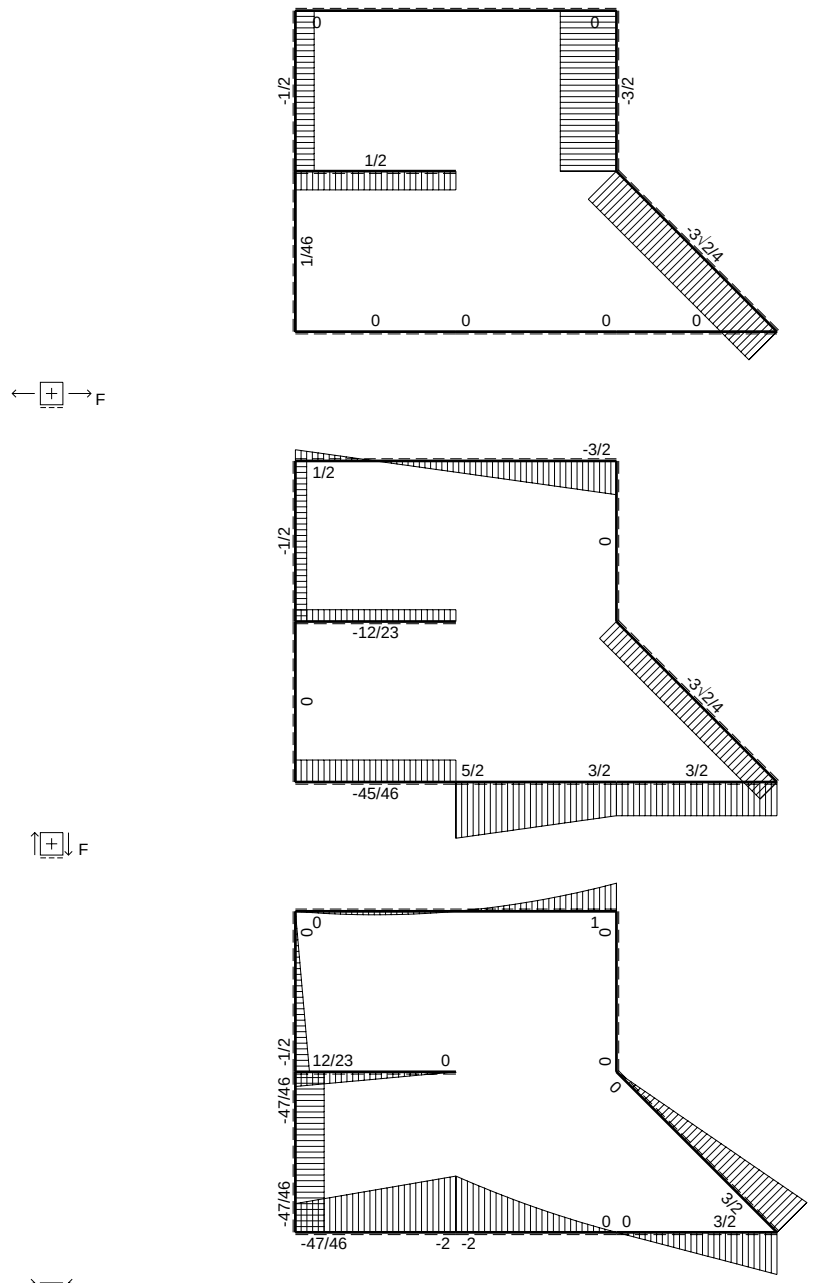
0
0
-1/2
-3/2
1/2
1/46
-3√2/4
0 0 0 0
F
-3/2
1/2
-1/2
0
-12/23
0
-3√2/4
5/2
3/2
3/2
-45/46
F
0
0
1
0
-1/2
12/23
0
0
0
-47/46
3/2
-47/46
0 0
3/2
-47/46
-2 -2
Fb

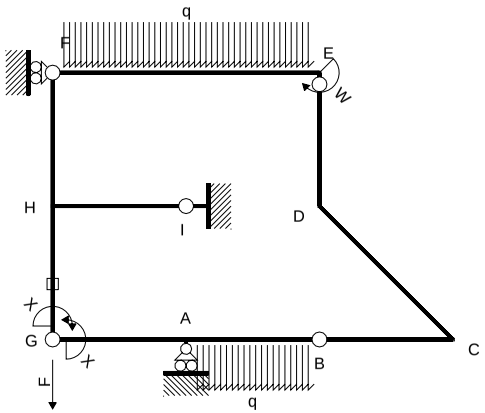

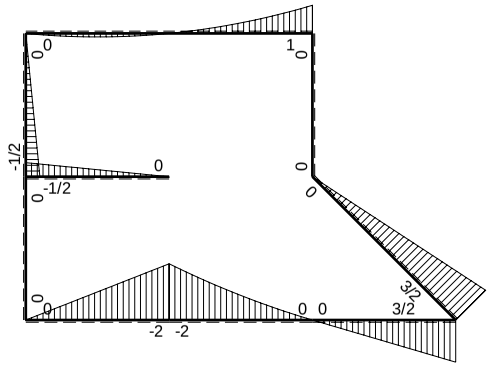

M_0 flessione da carichi assegnati

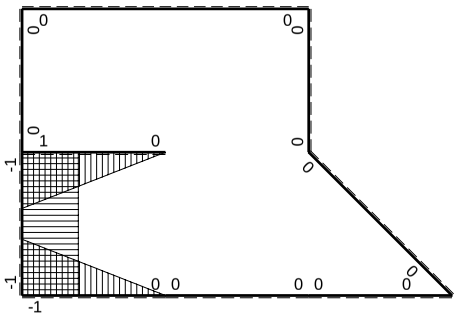

M_x flessione da iperstatica X=1

Quadro contributi PLV per iperstatica $X=W_{GA}$

→	$M_x(x)$	$M_0(x)$	M_xM_0	M_xM_x	$\int M_xM_0/EJdx$	$\int XM_xM_x/EJdx$
AB b	0	$-2Fb+5/2Fx-1/2qx^2$	0	0	0	0
BA b	0	$3/2Fx+1/2qx^2$	0	0		
BC b	0	3/2Fx	0	0	0	0
CB b	0	-3/2Fb+3/2Fx	0	0		
CD √2b	0	3/2Fb-3√2/4Fx	0	0	0	0
DE b	0	0	0	0	0	0
ED b	0	0	0	0		
EF 2b	0	$Fb-3/2Fx+1/2qx^2$	0	0	0	0
FE 2b	0	$1/2Fx-1/2qx^2$	0	0		
GA b	-1+x/b	-2Fx	$2Fx-2Fx^2/b$	$1-2x/b+x^2/b^2$	$1/3Fb^2/EJ$	1/3Xb/EJ
AG b	x/b	2Fb-2Fx	$2Fx-2Fx^2/b$	x^2/b^2		
FH b	0	-1/2Fx	0	0	0	0
HF b	0	1/2Fb-1/2Fx	0	0		
HI b	1-x/b	-1/2Fb+1/2Fx	$-1/2Fb+Fx-1/2Fx^2/b$	$1-2x/b+x^2/b^2$	$-1/6Fb^2/EJ$	1/3Xb/EJ
IH b	-x/b	1/2Fx	$-1/2Fx^2/b$	x^2/b^2		
HG b	-1	0	0	1	0	Xb/EJ
GH b	1	0	0	1		
HG	elongazione asta $N_{1HG}\varepsilon_{HG}L_{HG}$				$-Fb^2/EJ$	
A	molla nodo $-V_{1A}(V_{0A}+XV_{1A})/k_A$				$-9/8Fb^2/EJ$	1/4Xb/EJ
	totali				$-47/24Fb^2/EJ$	23/12Xb/EJ
	iperstatica $X=W_{GA}$				47/46Fb	

Sviluppi di calcolo iperstatica

$L^{XX}_{GA} = \int_o^b (1 - 2\,x/b + x^2/b^2)\ 1/EJ\ dx = [\ x - x^2/b + 1/3\ x^3/b^2\ ]_o^b\ 1/EJ$

$= (\ b - b + 1/3\ b\ )\ 1/EJ\ = 1/3\ b/EJ$

$L^{XX}_{AG} = \int_o^b (\ x^2/b^2\ )\ 1/EJ\ dx = [1/3\ x^3/b^2\ ]_o^b\ 1/EJ$

$= (1/3\ b\ )\ 1/EJ\ = 1/3\ b/EJ$

$L^{XX}_{HI} = \int_o^b (1 - 2\,x/b + x^2/b^2)\ 1/EJ\ dx = [\ x - x^2/b + 1/3\ x^3/b^2\ ]_o^b\ 1/EJ$

$= (\ b - b + 1/3\ b\ )\ 1/EJ\ = 1/3\ b/EJ$

$L^{XX}_{IH} = \int_o^b (\ x^2/b^2\ )\ 1/EJ\ dx = [1/3\ x^3/b^2\ ]_o^b\ 1/EJ$

$= (1/3\ b\ )\ 1/EJ\ = 1/3\ b/EJ$

$L^{XX}_{HG} = \int_o^b (1\ )\ 1/EJ\ dx = [\ x\ ]_o^b\ 1/EJ$

$= (\ b\ )\ 1/EJ\ =\ b/EJ$

$L^{XX}_{GH} = \int_o^b (1\ )\ 1/EJ\ dx = [\ x\ ]_o^b\ 1/EJ$

$= (\ b\ )\ 1/EJ\ =\ b/EJ$

$L^{Xo}_{GA} = \int_o^b (2\,x/b - 2\,x^2/b^2\ )\ Fb\ 1/EJ\ dx = [\ x^2/b - 2/3\ x^3/b^2\ ]_o^b\ Fb\ 1/EJ$

$= (\ b - 2/3\ b\ )\ Fb\ 1/EJ\ = 1/3\ \ Fb^2/EJ$

$L^{Xo}_{AG} = \int_o^b (2\,x/b - 2\,x^2/b^2\ )\ Fb\ 1/EJ\ dx = [\ x^2/b - 2/3\ x^3/b^2\ ]_o^b\ Fb\ 1/EJ$

$= (\ b - 2/3\ b\ )\ Fb\ 1/EJ\ = 1/3\ \ Fb^2/EJ$

$L^{Xo}_{HI} = \int_o^b (-1/2 + x/b - 1/2\ x^2/b^2\ )\ Fb\ 1/EJ\ dx = [-1/2\ x + 1/2\ x^2/b - 1/6\ x^3/b^2\ ]_o^b\ Fb\ 1/EJ$

$= (-1/2\ b + 1/2\ b - 1/6\ b\ )\ Fb\ 1/EJ\ = -1/6\ \ Fb^2/EJ$

$L^{Xo}_{IH} = \int_o^b (-1/2\ x^2/b^2\ )\ Fb\ 1/EJ\ dx = [-1/6\ x^3/b^2\ ]_o^b\ Fb\ 1/EJ$

$= (-1/6\ b\ )\ Fb\ 1/EJ\ = -1/6\ \ Fb^2/EJ$

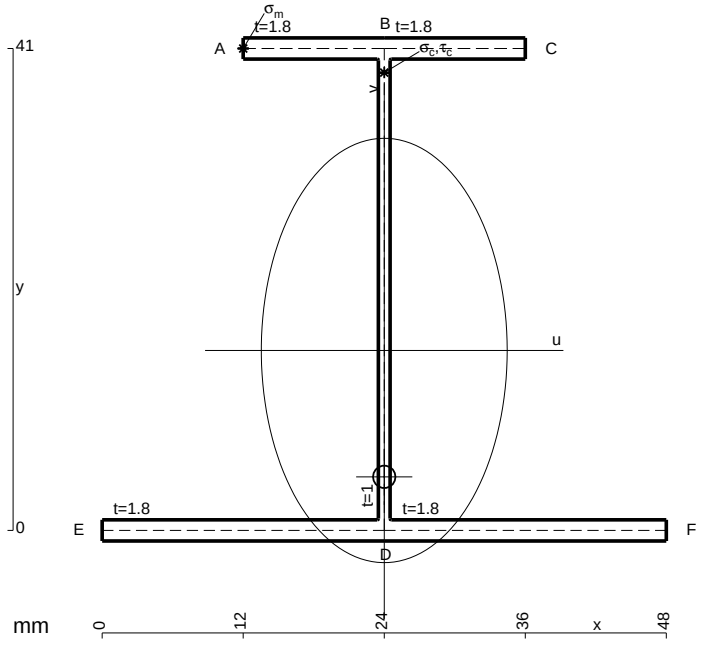

A = 170.6 mm^2
J_u = 55611. mm^4
J_v = 18662. mm^4
J_t = 153.6 mm^4
y_o = -10.75 mm
y_g = 15.31 mm
T_y = 1400. N
M_x = -470400. Nmm
x_m = 12. mm
y_m = 41. mm
u_m = -12. mm
v_m = 25.69 mm
$\sigma_m = -Mv/J_u$ = 217.3 N/mm^2
x_c = 24. mm
y_c = 41. mm
v_c = 25.69 mm
$\sigma_c = -Mv/J_u$ = 217.3 N/mm^2
$\tau_c = TS^*/tJ_u$ = 27.94 N/mm^2
$\tau_g = TS^*/tJ_u$ = 27.94 N/mm^2
t_c = 560. mm
$\sigma_o = \sqrt{\sigma^2 + 3\tau^2}$ = 222.6 N/mm^2

ESΣ05.xxxx.042

@ Adolfo Zavelani Rossi, Politecnico di Milano, vers.27.03.13 01.12.25

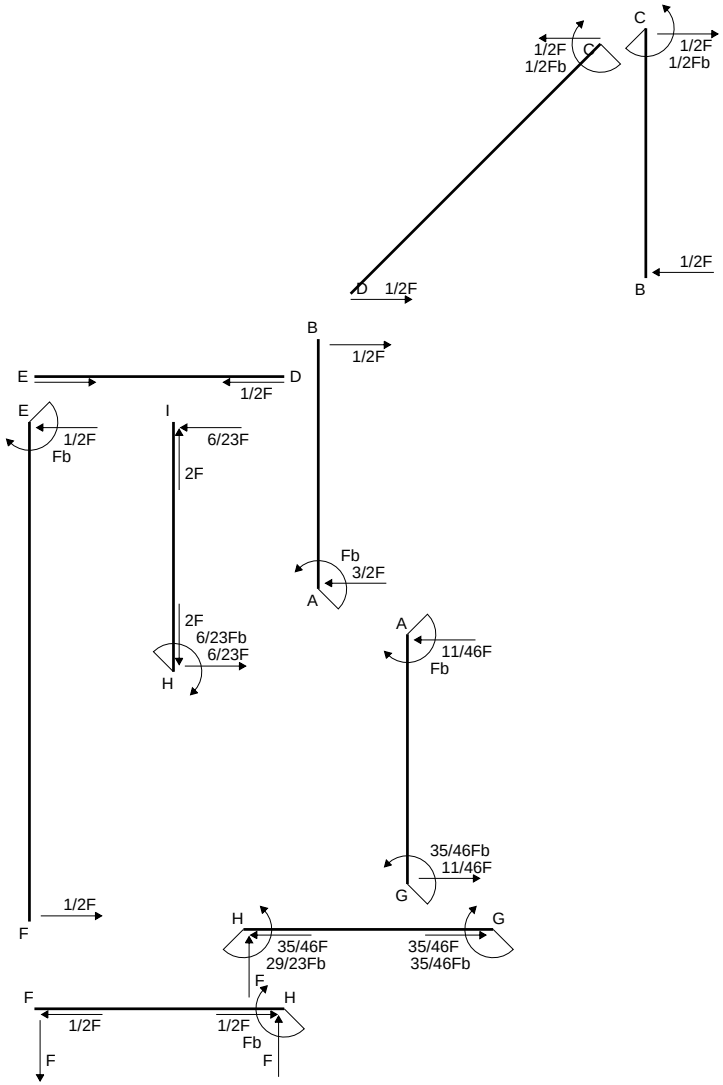
C
1/2F
1/2Fb
C
1/2F
1/2Fb
D 1/2F
1/2F
B
B
1/2F
E
D
1/2F
E
1/2F
Fb
I
6/23F
2F
Fb
3/2F
A
2F
6/23Fb
6/23F
H
A
11/46F
Fb
35/46Fb
11/46F
G
1/2F
F
H
G
35/46F
29/23Fb
35/46F
35/46Fb
F
H
F
1/2F
1/2F
Fb
F
F

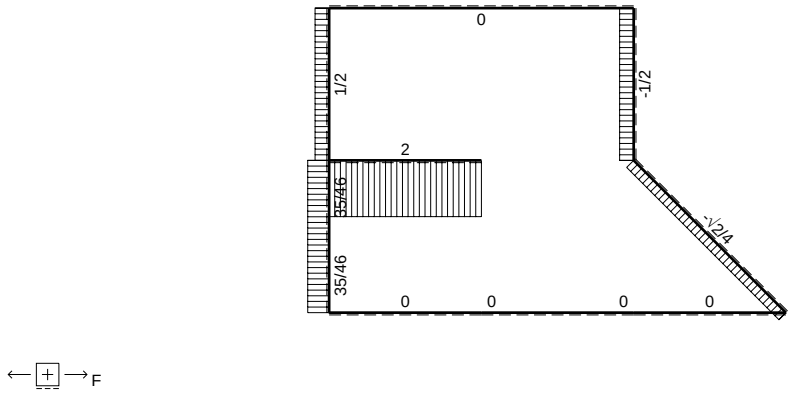
0
1/2
-1/2
2
35/46
-1/24
35/46
0
0
0
0
F

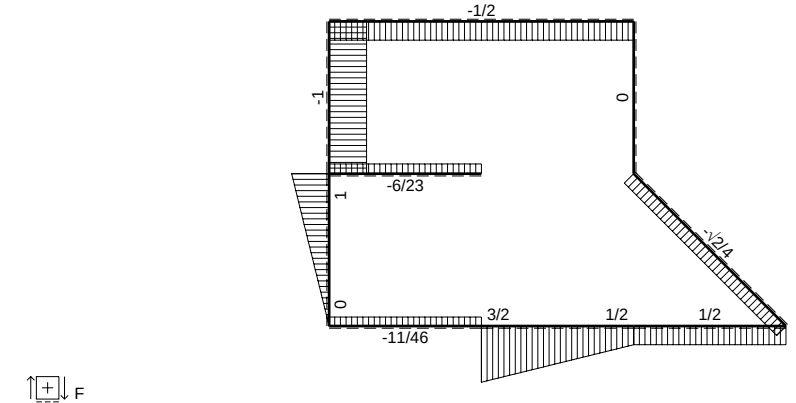
-1/2
-1
0
1
-6/23
-1/24
0
3/2
1/2
1/2
-11/46
F

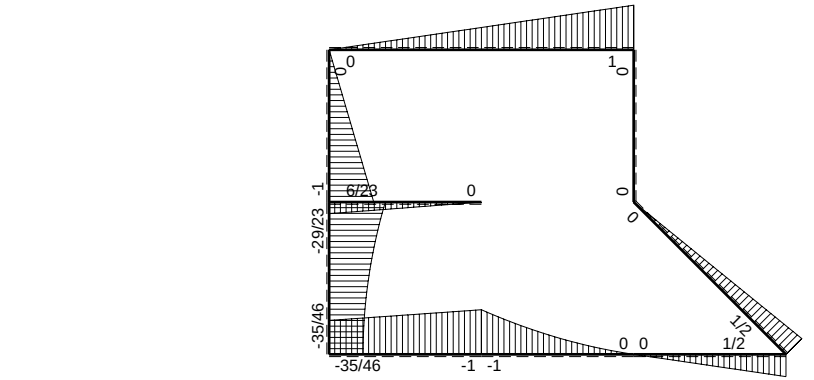
0
0
1
0
-1
6/23
0
0
-29/23
0
-35/46
1/2
0
0
1/2
-35/46
-1
-1
Fb

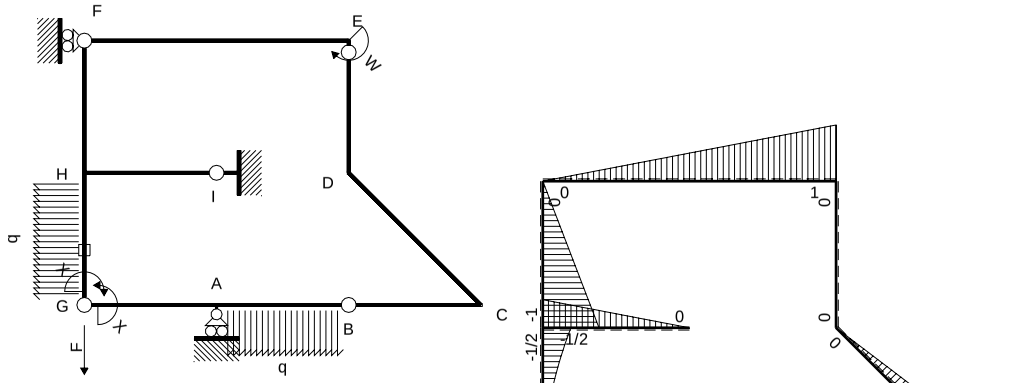

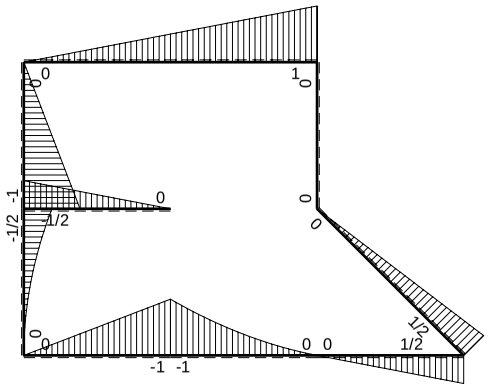

M_0 flessione da carichi assegnati

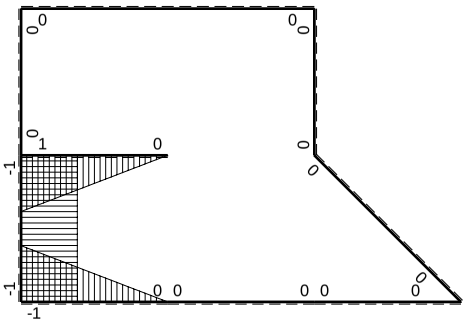

M_x flessione da iperstatica X=1

Quadro contributi PLV per iperstatica $X=W_{GA}$

→	$M_x(x)$	$M_o(x)$	M_xM_o	M_xM_x	$\int M_xM_o/EJdx$	$\int XM_xM_x/EJdx$
AB b	0	$-Fb+3/2Fx-1/2qx^2$	0	0	0	0
BA b	0	$1/2Fx+1/2qx^2$	0	0		
BC b	0	1/2Fx	0	0	0	0
CB b	0	$-1/2Fb+1/2Fx$	0	0		
CD $\sqrt{2}b$	0	$1/2Fb-\sqrt{2}/4Fx$	0	0	0	0
DE b	0	0	0	0	0	0
ED b	0	0	0	0		
EF 2b	0	$Fb-1/2Fx$	0	0	0	0
FE 2b	0	$-1/2Fx$	0	0		
GA b	$-1+x/b$	$-Fx$	$Fx-Fx^2/b$	$1-2x/b+x^2/b^2$	$1/6Fb^2/EJ$	$1/3Xb/EJ$
AG b	x/b	$Fb-Fx$	$Fx-Fx^2/b$	x^2/b^2		
FH b	0	$-Fx$	0	0	0	0
HF b	0	$Fb-Fx$	0	0		
HI b	$1-x/b$	$-1/2Fb+1/2Fx$	$-1/2Fb+Fx-1/2Fx^2/b$	$1-2x/b+x^2/b^2$	$-1/6Fb^2/EJ$	$1/3Xb/EJ$
IH b	$-x/b$	$1/2Fx$	$-1/2Fx^2/b$	x^2/b^2		
HG b	-1	$-1/2Fb+Fx-1/2qx^2$	$1/2Fb-Fx+1/2Fx^2/b$	1	$1/6Fb^2/EJ$	Xb/EJ
GH b	1	$1/2qx^2$	$1/2Fx^2/b$	1		
HG	elongazione asta $N_{1HG}\varepsilon_{HG}L_{HG}$				$-Fb^2/EJ$	
A	molla nodo $-V_{1A}(V_{0A}+XV_{1A})/k_A$				$-5/8Fb^2/EJ$	$1/4Xb/EJ$
	totali				$-35/24Fb^2/EJ$	$23/12Xb/EJ$
	iperstatica $X=W_{GA}$				35/46Fb	

Sviluppi di calcolo iperstatica

$L^{XX}_{GA} = \int_o^b (1 - 2\,x/b + x^2/b^2)\ 1/EJ\ dx = [\,x - x^2/b + 1/3\,x^3/b^2\,]_o^b\ 1/EJ$

$= (\,b - b + 1/3\,b\,)\ 1/EJ = 1/3\ b/EJ$

$L^{XX}_{AG} = \int_o^b (\,x^2/b^2\,)\ 1/EJ\ dx = [1/3\,x^3/b^2\,]_o^b\ 1/EJ$

$= (1/3\,b)\ 1/EJ = 1/3\ b/EJ$

$L^{XX}_{HI} = \int_o^b (1 - 2\,x/b + x^2/b^2)\ 1/EJ\ dx = [\,x - x^2/b + 1/3\,x^3/b^2\,]_o^b\ 1/EJ$

$= (\,b - b + 1/3\,b\,)\ 1/EJ = 1/3\ b/EJ$

$L^{XX}_{IH} = \int_o^b (\,x^2/b^2\,)\ 1/EJ\ dx = [1/3\,x^3/b^2\,]_o^b\ 1/EJ$

$= (1/3\,b)\ 1/EJ = 1/3\ b/EJ$

$L^{XX}_{HG} = \int_o^b (1)\ 1/EJ\ dx = [\,x\,]_o^b\ 1/EJ$

$= (\,b\,)\ 1/EJ = b/EJ$

$L^{XX}_{GH} = \int_o^b (1)\ 1/EJ\ dx = [\,x\,]_o^b\ 1/EJ$

$= (\,b\,)\ 1/EJ = b/EJ$

$L^{Xo}_{GA} = \int_o^b (\,x/b - x^2/b^2\,)\ Fb\ 1/EJ\ dx = [1/2\,x^2/b - 1/3\,x^3/b^2\,]_o^b\ Fb\ 1/EJ$

$= (1/2\,b - 1/3\,b)\ Fb\ 1/EJ = 1/6\ Fb^2/EJ$

$L^{Xo}_{AG} = \int_o^b (\,x/b - x^2/b^2\,)\ Fb\ 1/EJ\ dx = [1/2\,x^2/b - 1/3\,x^3/b^2\,]_o^b\ Fb\ 1/EJ$

$= (1/2\,b - 1/3\,b)\ Fb\ 1/EJ = 1/6\ Fb^2/EJ$

$L^{Xo}_{HI} = \int_o^b (-1/2 + x/b - 1/2\,x^2/b^2)\ Fb\ 1/EJ\ dx = [-1/2\,x + 1/2\,x^2/b - 1/6\,x^3/b^2\,]_o^b\ Fb\ 1/EJ$

$= (-1/2\,b + 1/2\,b - 1/6\,b\,)\ Fb\ 1/EJ = -1/6\ Fb^2/EJ$

$L^{Xo}_{IH} = \int_o^b (-1/2\,x^2/b^2\,)\ Fb\ 1/EJ\ dx = [-1/6\,x^3/b^2\,]_o^b\ Fb\ 1/EJ$

$= (-1/6\,b\,)\ Fb\ 1/EJ = -1/6\ Fb^2/EJ$

$L^{Xo}_{HG} = \int_o^b (1/2 - x/b + 1/2\,x^2/b^2\,)\ Fb\ 1/EJ\ dx - 1\ \ (-1)\ \ (-1)\ \ Fb^2/EJ$

$= [1/2\,x - 1/2\,x^2/b + 1/6\,x^3/b^2\,]_o^b\ Fb\ 1/EJ\ -\ 1\ \ (-1)\ \ (-1)\ \ Fb^2/EJ$

$= (1/2\,b - 1/2\,b + 1/6\,b\,)\ Fb\ 1/EJ\ -\ 1\ \ (-1)\ \ (-1)\ \ Fb^2/EJ = -5/6\ \ Fb^2/EJ$

$L^{Xo}_{GH} = \int_o^b (1/2\,x^2/b^2\,)\ Fb\ 1/EJ\ dx - 1\ \ (-1)\ \ (-1)\ \ Fb^2/EJ = [1/6\,x^3/b^2\,]_o^b\ Fb\ 1/EJ\ -\ 1\ \ (-1)\ \ (-1)\ \ Fb^2/EJ$

$= (1/6\,b\,)\ Fb\ 1/EJ\ -\ 1\ \ (-1)\ \ (-1)\ \ Fb^2/EJ = -5/6\ \ Fb^2/EJ$

PROCEDIMENTO E RISULTATI 238581 ESΣ05.xxxx.043

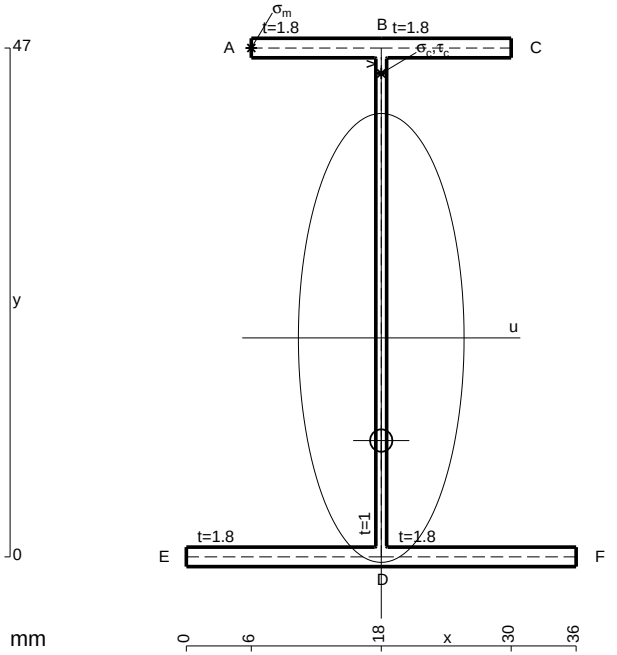

A = 155. mm^2
J_u = 66633. mm^4
J_v = 9072. mm^4
J_t = 132.3 mm^4
y_o = -9.482 mm
y_g = 20.23 mm
T_y = 1650. N
M_x = -572000. Nmm
x_m = 6. mm
y_m = 47. mm
u_m = -12. mm
v_m = 26.77 mm
$\sigma_m = -Mv/J_u$ = 229.8 N/mm^2
x_c = 18. mm
y_c = 47. mm
v_c = 26.77 mm
$\sigma_c = -Mv/J_u$ = 229.8 N/mm^2
$\tau_c = TS^*/tJ_u$ = 28.64 N/mm^2
$\tau_g = TS^*/tJ_u$ = 28.64 N/mm^2
t_c = 1100. mm
$\sigma_o = \sqrt{\sigma^2 + 3\tau^2}$ = 235.1 N/mm^2

@ Adolfo Zavelani Rossi, Politecnico di Milano, vers.27.03.13 01.12.25

ESΣ05.xxxx.043

@ Adolfo Zavelani Rossi, Politecnico di Milano, vers.27.03.13 01.12.25

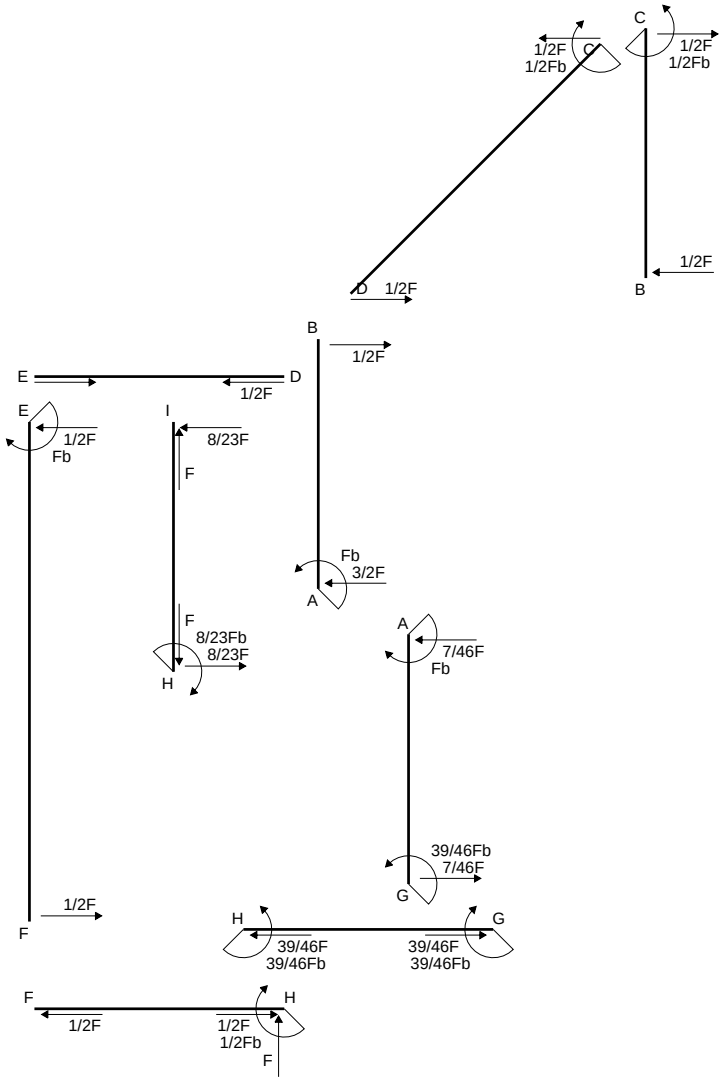
C
1/2F
1/2Fb
C
1/2F
1/2Fb
D
1/2F
B
1/2F
B
1/2F
E
D
1/2F
E
1/2F
Fb
I
8/23F
F
Fb
3/2F
A
F
8/23Fb
8/23F
H
A
7/46F
Fb
39/46Fb
7/46F
G
1/2F
F
H
G
39/46F
39/46Fb
39/46F
39/46Fb
F
H
1/2F
1/2F
1/2Fb
F

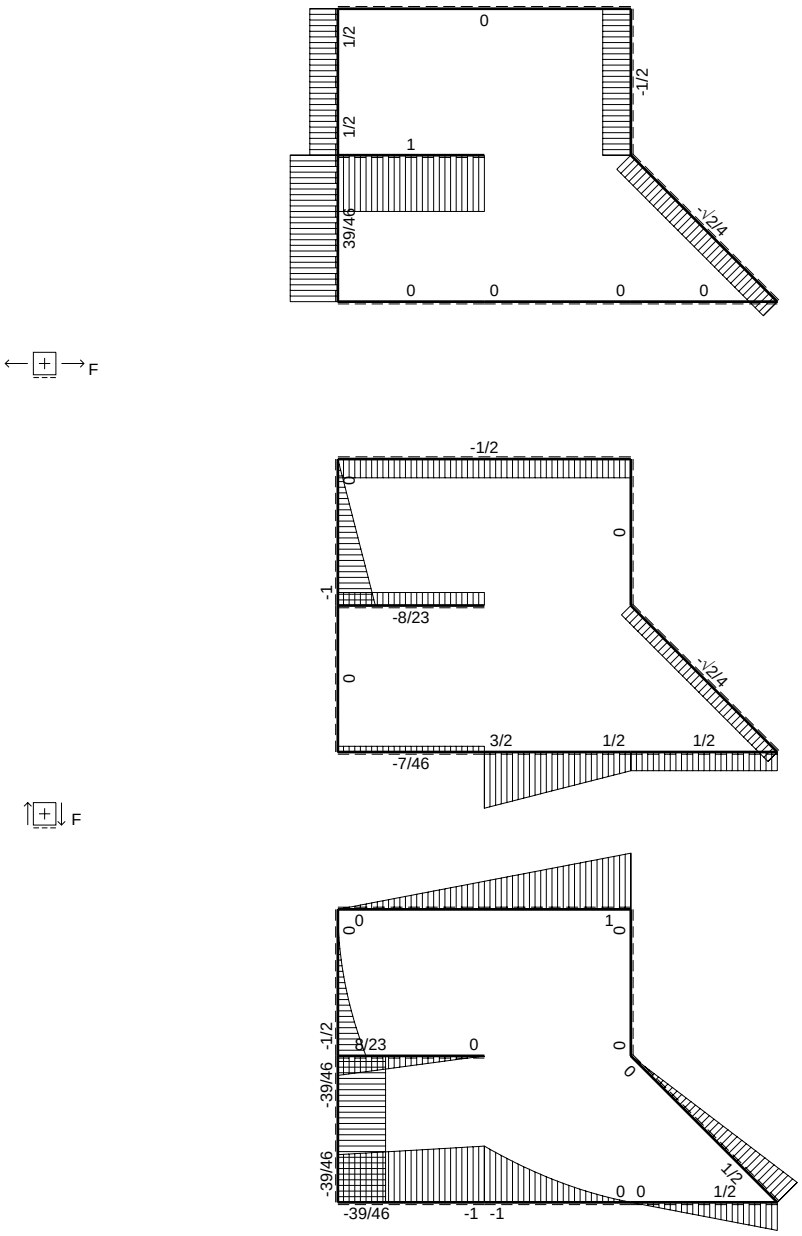
0
1/2
-1/2
1/2
1
39/46
-√2/4
0
0
0
0
F
-1/2
0
0
-1
-8/23
-√2/4
0
3/2
1/2
1/2
-7/46
F
0
1
0
0
-1/2
8/23
0
0
0
-39/46
-39/46
1/2
0
0
1/2
-39/46
-1
-1
Fb

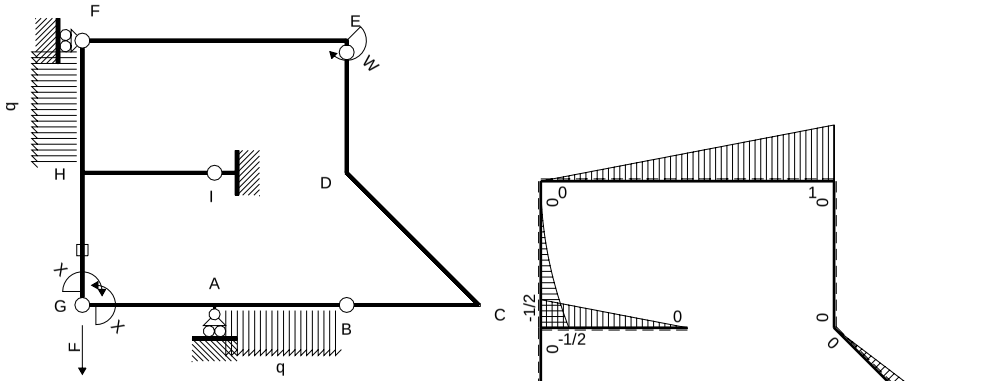

M_0 flessione da carichi assegnati

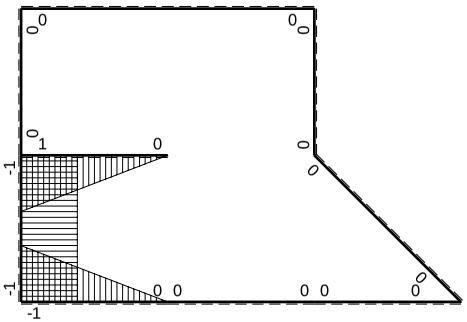

M_x flessione da iperstatica X=1

Quadro contributi PLV per iperstatica $X=W_{GA}$

→	$M_x(x)$	$M_o(x)$	M_xM_o	M_xM_x	$\int M_xM_o/EJdx$	$\int XM_xM_x/EJdx$
AB b	0	$-Fb+3/2Fx-1/2qx^2$	0	0	0	0
BA b	0	$1/2Fx+1/2qx^2$	0	0		
BC b	0	1/2Fx	0	0	0	0
CB b	0	-1/2Fb+1/2Fx	0	0		
CD √2b	0	1/2Fb-√2/4Fx	0	0	0	0
DE b	0	0	0	0	0	0
ED b	0	0	0	0		
EF 2b	0	Fb-1/2Fx	0	0	0	0
FE 2b	0	-1/2Fx	0	0		
GA b	-1+x/b	-Fx	$Fx-Fx^2/b$	$1-2x/b+x^2/b^2$	$1/6Fb^2/EJ$	1/3Xb/EJ
AG b	x/b	Fb-Fx	$Fx-Fx^2/b$	x^2/b^2		
FH b	0	$-1/2qx^2$	0	0	0	0
HF b	0	$1/2Fb-Fx+1/2qx^2$	0	0		
HI b	1-x/b	-1/2Fb+1/2Fx	$-1/2Fb+Fx-1/2Fx^2/b$	$1-2x/b+x^2/b^2$	$-1/6Fb^2/EJ$	1/3Xb/EJ
IH b	-x/b	1/2Fx	$-1/2Fx^2/b$	x^2/b^2		
HG b	-1	0	0	1	0	Xb/EJ
GH b	1	0	0	1		
HG	elongazione asta $N_{1HG}\varepsilon_{HG}L_{HG}$				$-Fb^2/EJ$	
A	molla nodo $-V_{1A}(V_{0A}+XV_{1A})/k_A$				$-5/8Fb^2/EJ$	1/4Xb/EJ
	totali				$-13/8Fb^2/EJ$	23/12Xb/EJ
	iperstatica $X=W_{GA}$				39/46Fb	

Sviluppi di calcolo iperstatica

$L^{XX}_{GA} = \int_o^b (1 - 2\,x/b + x^2/b^2)\ 1/EJ\ dx = [\,x - x^2/b + 1/3\,x^3/b^2\,]_o^b\ 1/EJ$

$= (\,b - b + 1/3\,b\,)\ 1/EJ\ = 1/3\ b/EJ$

$L^{XX}_{AG} = \int_o^b (\,x^2/b^2\,)\ 1/EJ\ dx = [1/3\,x^3/b^2\,]_o^b\ 1/EJ$

$= (1/3\,b\,)\ 1/EJ\ = 1/3\ b/EJ$

$L^{XX}_{HI} = \int_o^b (1 - 2\,x/b + x^2/b^2)\ 1/EJ\ dx = [\,x - x^2/b + 1/3\,x^3/b^2\,]_o^b\ 1/EJ$

$= (\,b - b + 1/3\,b\,)\ 1/EJ\ = 1/3\ b/EJ$

$L^{XX}_{IH} = \int_o^b (\,x^2/b^2\,)\ 1/EJ\ dx = [1/3\,x^3/b^2\,]_o^b\ 1/EJ$

$= (1/3\,b\,)\ 1/EJ\ = 1/3\ b/EJ$

$L^{XX}_{HG} = \int_o^b (1)\ 1/EJ\ dx = [\,x\,]_o^b\ 1/EJ$

$= (\,b\,)\ 1/EJ\ =\ b/EJ$

$L^{XX}_{GH} = \int_o^b (1)\ 1/EJ\ dx = [\,x\,]_o^b\ 1/EJ$

$= (\,b\,)\ 1/EJ\ =\ b/EJ$

$L^{Xo}_{GA} = \int_o^b (\,x/b - x^2/b^2\,)\ Fb\ 1/EJ\ dx = [1/2\,x^2/b - 1/3\,x^3/b^2\,]_o^b\ Fb\ 1/EJ$

$= (1/2\,b - 1/3\,b\,)\ Fb\ 1/EJ\ = 1/6\ Fb^2/EJ$

$L^{Xo}_{AG} = \int_o^b (\,x/b - x^2/b^2\,)\ Fb\ 1/EJ\ dx = [1/2\,x^2/b - 1/3\,x^3/b^2\,]_o^b\ Fb\ 1/EJ$

$= (1/2\,b - 1/3\,b\,)\ Fb\ 1/EJ\ = 1/6\ Fb^2/EJ$

$L^{Xo}_{HI} = \int_o^b (-1/2 + x/b - 1/2\,x^2/b^2\,)\ Fb\ 1/EJ\ dx = [-1/2\,x + 1/2\,x^2/b - 1/6\,x^3/b^2\,]_o^b\ Fb\ 1/EJ$

$= (-1/2\,b + 1/2\,b - 1/6\,b\,)\ Fb\ 1/EJ\ = -1/6\ Fb^2/EJ$

$L^{Xo}_{IH} = \int_o^b (-1/2\,x^2/b^2\,)\ Fb\ 1/EJ\ dx = [-1/6\,x^3/b^2\,]_o^b\ Fb\ 1/EJ$

$= (-1/6\,b\,)\ Fb\ 1/EJ\ = -1/6\ Fb^2/EJ$

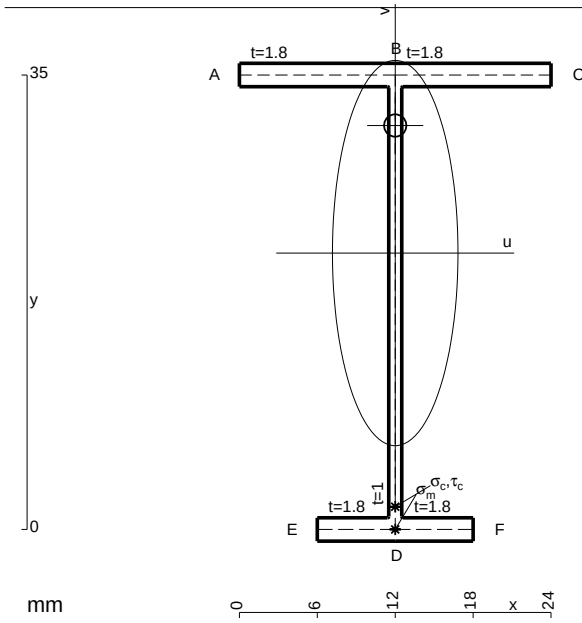

A = 99.8 mm^2
J_u = 21986. mm^4
J_v = 2333. mm^4
J_t = 81.65 mm^4
y_o = 9.824 mm
y_g = 21.29 mm
T_y = 885. N
M_x = -247800. Nmm
x_m = 12. mm
v_m = -21.29 mm
$\sigma_m = -Mv/J_u$ = -239.9 N/mm^2
y_c = 3. mm
u_c = -12. mm
v_c = -18.29 mm
$\sigma_c = -Mv/J_u$ = -239.9 N/mm^2
$\tau_c = TS^*/tJ_u$ = 18.51 N/mm^2
$\tau_g = TS^*/tJ_u$ = 18.51 N/mm^2
t_c = 590. mm
$\sigma_o = \sqrt{\sigma^2 + 3\tau^2}$ = 242.1 N/mm^2

ESΣ05.xxxx.044

@ Adolfo Zavelani Rossi, Politecnico di Milano, vers.27.03.13 01.12.25

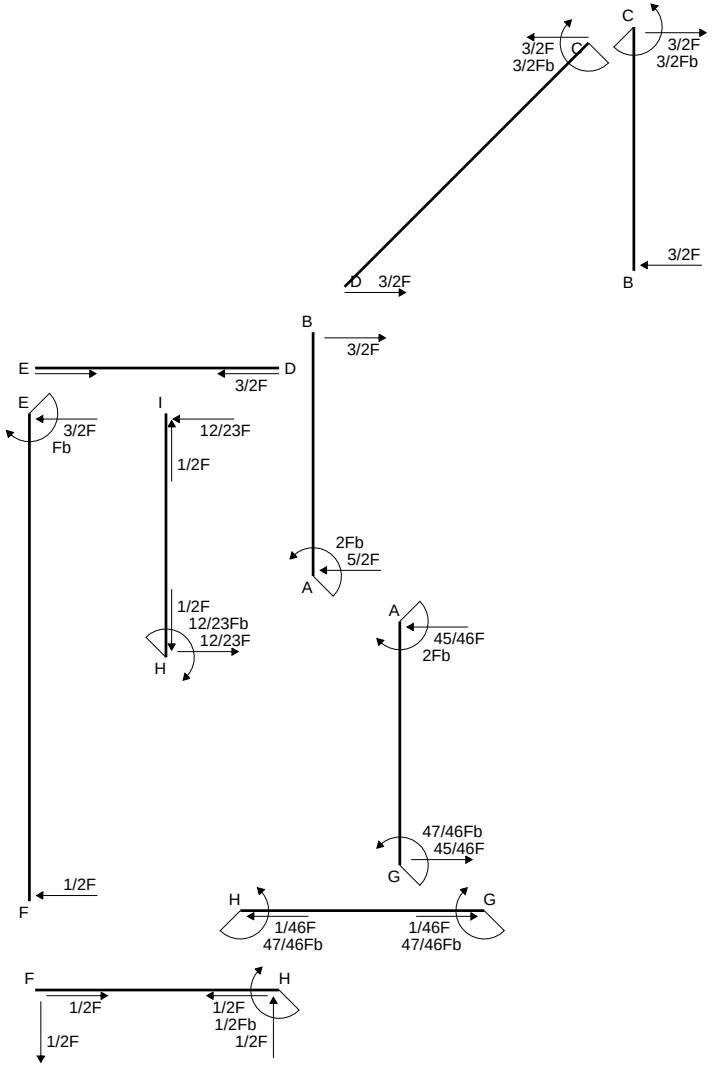
C
3/2F
3/2Fb
C
3/2F
3/2Fb
3/2F
D 3/2F
B
B
3/2F
E
D
3/2F
E
3/2F
Fb
I
12/23F
1/2F
2Fb
5/2F
A
1/2F
12/23Fb
12/23F
H
A
45/46F
2Fb
47/46Fb
45/46F
G
1/2F
F
H
G
1/46F
47/46Fb
1/46F
47/46Fb
F
1/2F
1/2F
H
1/2F
1/2Fb
1/2F

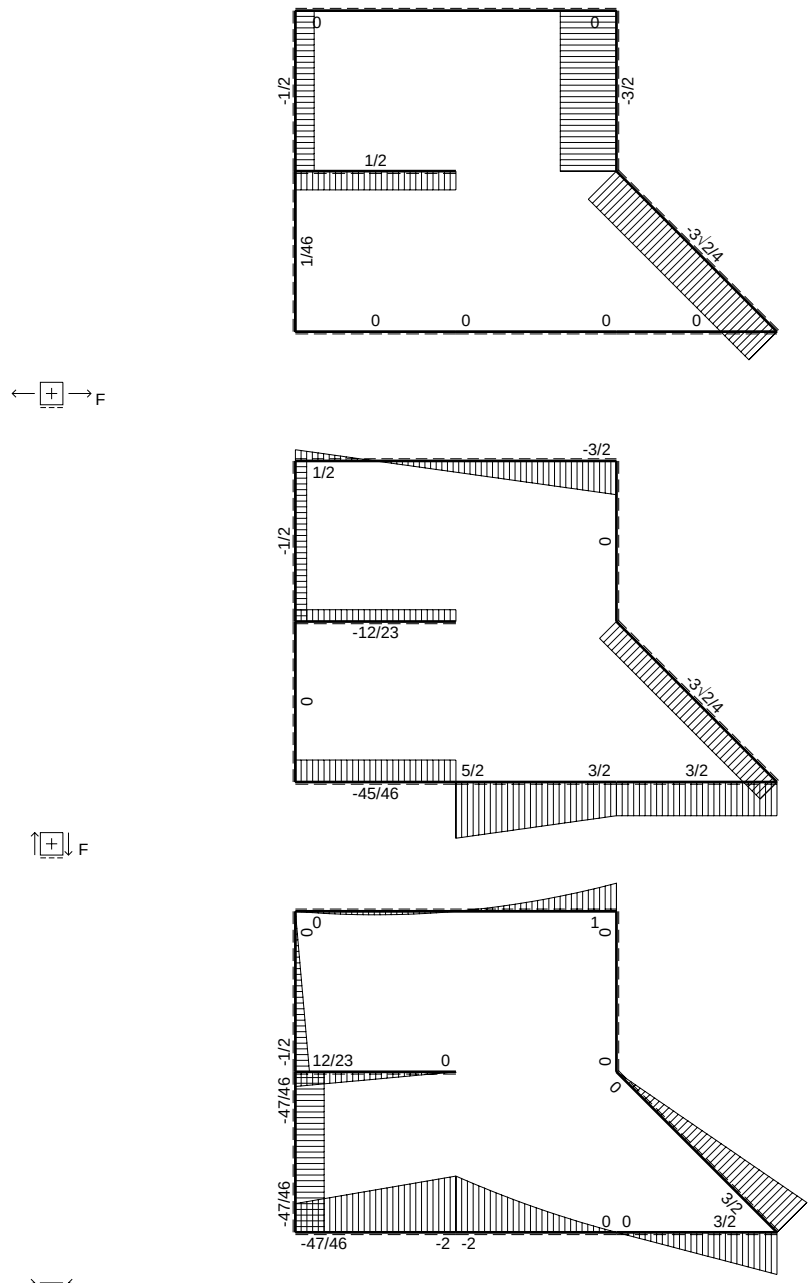
0
0
-1/2
-3/2
1/2
1/46
-3√2/4
0
0
0
0
F
-3/2
1/2
-1/2
0
-12/23
0
-3√2/4
5/2
3/2
3/2
-45/46
F
0
0
1
0
-1/2
12/23
0
0
0
-47/46
-47/46
3/2
0 0
3/2
-47/46
-2 -2
Fb

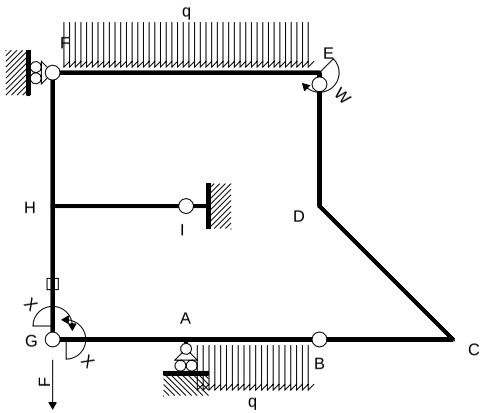

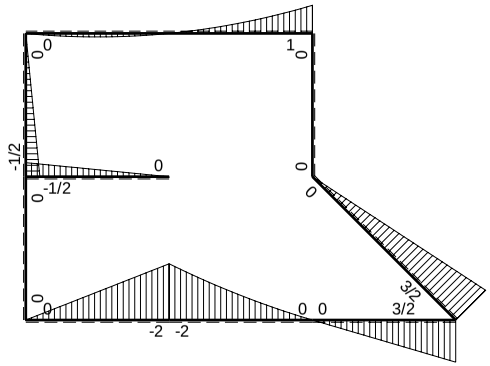

M_0 flessione da carichi assegnati

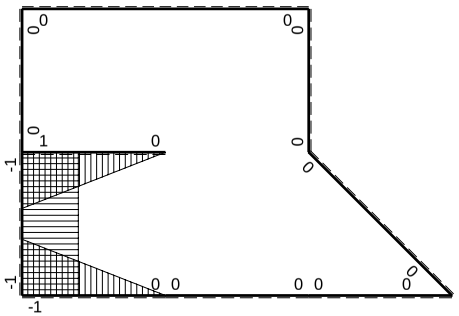

M_x flessione da iperstatica X=1

Quadro contributi PLV per iperstatica $X=W_{GA}$

→	$M_x(x)$	$M_0(x)$	M_xM_0	M_xM_x	$\int M_xM_0/EJdx$	$\int XM_xM_x/EJdx$
AB b	0	$-2Fb+5/2Fx-1/2qx^2$	0	0	0	0
BA b	0	$3/2Fx+1/2qx^2$	0	0		
BC b	0	3/2Fx	0	0	0	0
CB b	0	-3/2Fb+3/2Fx	0	0		
CD √2b	0	3/2Fb-3√2/4Fx	0	0	0	0
DE b	0	0	0	0	0	0
ED b	0	0	0	0		
EF 2b	0	$Fb-3/2Fx+1/2qx^2$	0	0	0	0
FE 2b	0	$1/2Fx-1/2qx^2$	0	0		
GA b	-1+x/b	-2Fx	$2Fx-2Fx^2/b$	$1-2x/b+x^2/b^2$	$1/3Fb^2/EJ$	1/3Xb/EJ
AG b	x/b	2Fb-2Fx	$2Fx-2Fx^2/b$	x^2/b^2		
FH b	0	-1/2Fx	0	0	0	0
HF b	0	1/2Fb-1/2Fx	0	0		
HI b	1-x/b	-1/2Fb+1/2Fx	$-1/2Fb+Fx-1/2Fx^2/b$	$1-2x/b+x^2/b^2$	$-1/6Fb^2/EJ$	1/3Xb/EJ
IH b	-x/b	1/2Fx	$-1/2Fx^2/b$	x^2/b^2		
HG b	-1	0	0	1	0	Xb/EJ
GH b	1	0	0	1		
HG	elongazione asta $N_{1HG}\varepsilon_{HG}L_{HG}$				$-Fb^2/EJ$	
A	molla nodo $-V_{1A}(V_{0A}+XV_{1A})/k_A$				$-9/8Fb^2/EJ$	1/4Xb/EJ
	totali				$-47/24Fb^2/EJ$	23/12Xb/EJ
	iperstatica $X=W_{GA}$				47/46Fb	

Sviluppi di calcolo iperstatica

$L^{XX}_{GA} = \int_o^b (1 - 2\,x/b + x^2/b^2)\ 1/EJ\ dx = [\,x - x^2/b + 1/3\,x^3/b^2\,]_o^b\ 1/EJ$

$= (\,b - b + 1/3\,b\,)\ 1/EJ\ = 1/3\ b/EJ$

$L^{XX}_{AG} = \int_o^b (\,x^2/b^2\,)\ 1/EJ\ dx = [1/3\,x^3/b^2\,]_o^b\ 1/EJ$

$= (1/3\,b\,)\ 1/EJ\ = 1/3\ b/EJ$

$L^{XX}_{HI} = \int_o^b (1 - 2\,x/b + x^2/b^2)\ 1/EJ\ dx = [\,x - x^2/b + 1/3\,x^3/b^2\,]_o^b\ 1/EJ$

$= (\,b - b + 1/3\,b\,)\ 1/EJ\ = 1/3\ b/EJ$

$L^{XX}_{IH} = \int_o^b (\,x^2/b^2\,)\ 1/EJ\ dx = [1/3\,x^3/b^2\,]_o^b\ 1/EJ$

$= (1/3\,b\,)\ 1/EJ\ = 1/3\ b/EJ$

$L^{XX}_{HG} = \int_o^b (1)\ 1/EJ\ dx = [\,x\,]_o^b\ 1/EJ$

$= (\,b\,)\ 1/EJ\ =\ b/EJ$

$L^{XX}_{GH} = \int_o^b (1)\ 1/EJ\ dx = [\,x\,]_o^b\ 1/EJ$

$= (\,b\,)\ 1/EJ\ =\ b/EJ$

$L^{Xo}_{GA} = \int_o^b (2\,x/b - 2\,x^2/b^2)\ Fb\ 1/EJ\ dx = [\,x^2/b - 2/3\,x^3/b^2\,]_o^b\ Fb\ 1/EJ$

$= (\,b - 2/3\,b\,)\ Fb\ 1/EJ\ = 1/3\ Fb^2/EJ$

$L^{Xo}_{AG} = \int_o^b (2\,x/b - 2\,x^2/b^2)\ Fb\ 1/EJ\ dx = [\,x^2/b - 2/3\,x^3/b^2\,]_o^b\ Fb\ 1/EJ$

$= (\,b - 2/3\,b\,)\ Fb\ 1/EJ\ = 1/3\ Fb^2/EJ$

$L^{Xo}_{HI} = \int_o^b (-1/2 + x/b - 1/2\,x^2/b^2)\ Fb\ 1/EJ\ dx = [-1/2\,x + 1/2\,x^2/b - 1/6\,x^3/b^2\,]_o^b\ Fb\ 1/EJ$

$= (-1/2\,b + 1/2\,b - 1/6\,b\,)\ Fb\ 1/EJ\ = -1/6\ Fb^2/EJ$

$L^{Xo}_{IH} = \int_o^b (-1/2\,x^2/b^2)\ Fb\ 1/EJ\ dx = [-1/6\,x^3/b^2\,]_o^b\ Fb\ 1/EJ$

$= (-1/6\,b\,)\ Fb\ 1/EJ\ = -1/6\ Fb^2/EJ$

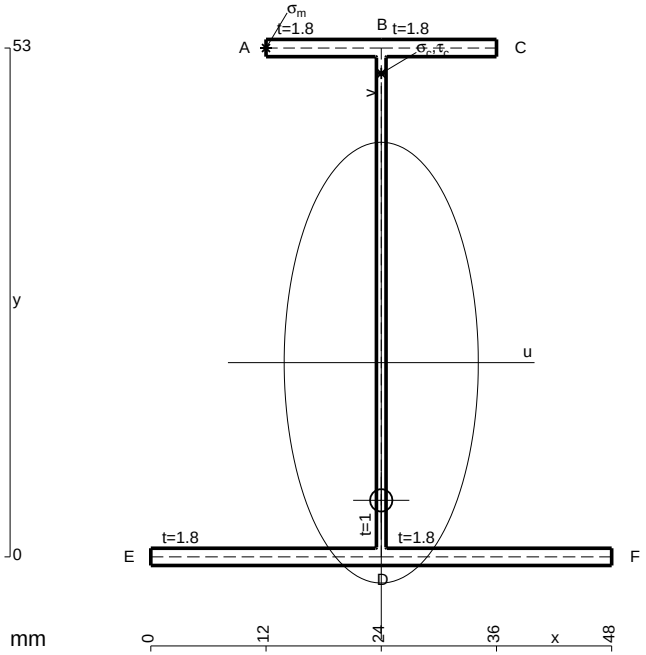

A = 182.6 mm^2
J_u = 96241. mm^4
J_v = 18662. mm^4
J_t = 157.6 mm^4
y_o = -14.34 mm
y_g = 20.23 mm
T_y = 1075. N
M_x = -576200. Nmm
x_m = 12. mm
y_m = 53. mm
u_m = -12. mm
v_m = 32.77 mm
$\sigma_m = -Mv/J_u$ = 196.2 N/mm^2
x_c = 24. mm
y_c = 53. mm
v_c = 32.77 mm
$\sigma_c = -Mv/J_u$ = 196.2 N/mm^2
$\tau_c = TS^*/tJ_u$ = 15.81 N/mm^2
$\tau_g = TS^*/tJ_u$ = 15.81 N/mm^2
t_c = 430. mm
$\sigma_o = \sqrt{\sigma^2 + 3\tau^2}$ = 198.1 N/mm^2

ESΣ05.xxxx.045

@ Adolfo Zavelani Rossi, Politecnico di Milano, vers.27.03.13 01.12.25

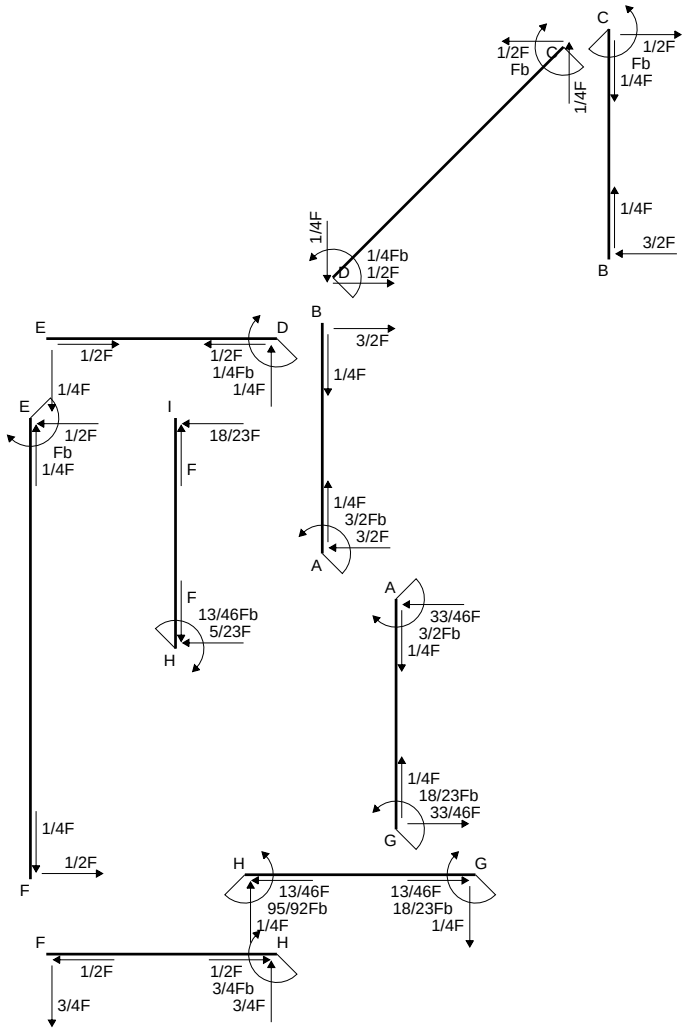
C
1/2F
Fb
1/4F
C
1/4F
1/2F
Fb
1/4F
1/4F
3/2F
B
1/4F
1/4Fb
1/2F
D
E
1/2F
D
1/2F
1/4Fb
1/4F
B
3/2F
1/4F
E
1/4F
1/2F
Fb
1/4F
I
18/23F
F
1/4F
3/2Fb
3/2F
A
F
13/46Fb
5/23F
H
A
33/46F
3/2Fb
1/4F
1/4F
18/23Fb
33/46F
G
1/4F
1/2F
F
H
13/46F
95/92Fb
1/4F
H
13/46F
18/23Fb
1/4F
G
F
1/2F
3/4F
H
1/2F
3/4Fb
3/4F

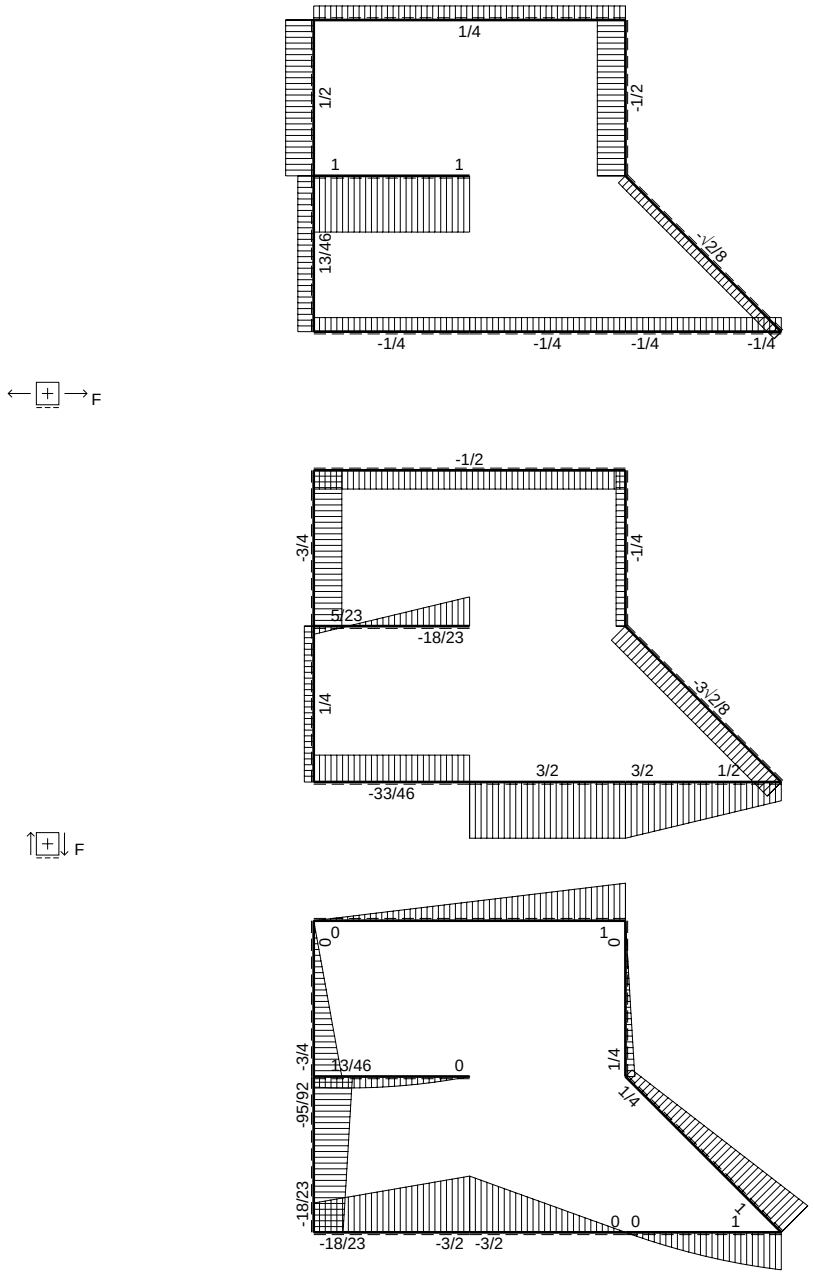
F
1/4
1/2
-1/2
1
1
13/46
-1/2
-1/4
-1/4
-1/4
-1/4
F
-1/2
-3/4
-1/4
5/23
-18/23
1/4
-1/2
3/2
3/2
1/2
-33/46
Fb
1
0
0
1
0
0
-3/4
13/46
0
1/4
1/4
-95/92
-18/23
0
0
1
-18/23
-3/2
-3/2

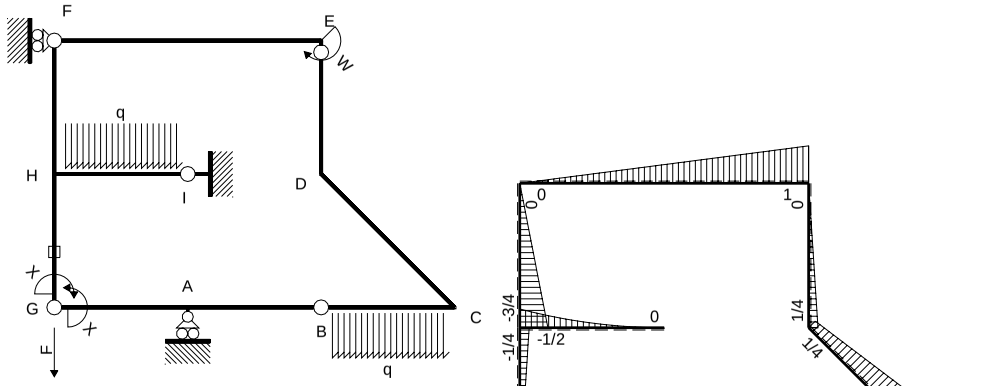

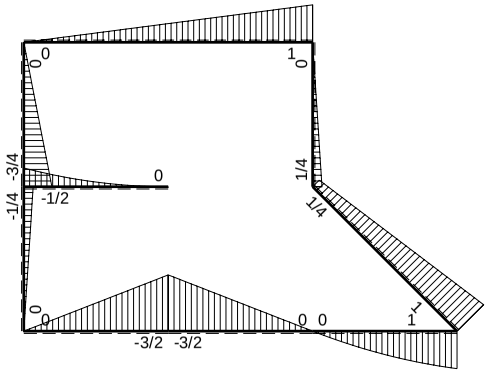

M_0 flessione da carichi assegnati

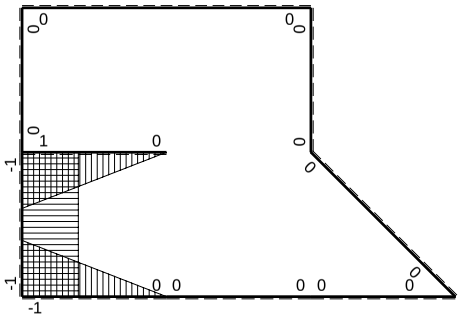

M_x flessione da iperstatica X=1

PROCEDIMENTO E RISULTATI 237363 ESΣ05.xxxx.046

@ Adolfo Zavelani Rossi, Politecnico di Milano, vers.27.03.13 01.12.25

Quadro contributi PLV per iperstatica $X=W_{GA}$

→	$M_x(x)$	$M_o(x)$	M_xM_o	M_xM_x	$\int M_xM_o/EJdx$	$\int XM_xM_x/EJdx$
AB b	0	$-3/2Fb+3/2Fx$	0	0	0	0
BA b	0	$3/2Fx$	0	0		
BC b	0	$3/2Fx-1/2qx^2$	0	0	0	0
CB b	0	$-Fb+1/2Fx+1/2qx^2$	0	0		
CD $\sqrt{2}b$	0	$Fb-3\sqrt{2}/8Fx$	0	0	0	0
DE b	0	$1/4Fb-1/4Fx$	0	0	0	0
ED b	0	$-1/4Fx$	0	0		
EF 2b	0	$Fb-1/2Fx$	0	0	0	0
FE 2b	0	$-1/2Fx$	0	0		
GA b	$-1+x/b$	$-3/2Fx$	$3/2Fx-3/2Fx^2/b$	$1-2x/b+x^2/b^2$	$1/4Fb^2/EJ$	$1/3Xb/EJ$
AG b	x/b	$3/2Fb-3/2Fx$	$3/2Fx-3/2Fx^2/b$	x^2/b^2		
FH b	0	$-3/4Fx$	0	0	0	0
HF b	0	$3/4Fb-3/4Fx$	0	0		
HI b	$1-x/b$	$-1/2Fb+Fx-1/2qx^2$	$-1/2Fb+3/2Fx-3/2Fx^2/b+1/2qx^3/b$	$1-2x/b+x^2/b^2$	$-1/8Fb^2/EJ$	$1/3Xb/EJ$
IH b	$-x/b$	$1/2qx^2$	$-1/2qx^3/b$	x^2/b^2		
HG b	-1	$-1/4Fb+1/4Fx$	$1/4Fb-1/4Fx$	1	$1/8Fb^2/EJ$	Xb/EJ
GH b	1	$1/4Fx$	$1/4Fx$	1		
HG	elongazione asta $N_{1HG}\varepsilon_{HG}L_{HG}$				$-Fb^2/EJ$	
A	molla nodo $-V_{1A}(V_{oA}+XV_{1A})/k_A$				$-3/4Fb^2/EJ$	$1/4Xb/EJ$
	totali				$-3/2Fb^2/EJ$	$23/12Xb/EJ$
	iperstatica $X=W_{GA}$				18/23Fb	

PROCEDIMENTO E RISULTATI 237363 ESΣ05.xxxx.046

Sviluppi di calcolo iperstatica

@ Adolfo Zavelani Rossi, Politecnico di Milano, vers.27.03.13 01.12.25

$L^{XX}_{GA} = \int_o^b (1 -2\ x/b + x^2/b^2)\ 1/EJ\ dx = [\ x - x^2/b + 1/3\ x^3/b^2\ ]_o^b\ 1/EJ$

$= (\ b - b + 1/3\ b\ )\ 1/EJ\ = 1/3\ b/EJ$

$L^{XX}_{AG} = \int_o^b (\ x^2/b^2\ )\ 1/EJ\ dx = [1/3\ x^3/b^2\ ]_o^b\ 1/EJ$

$= (1/3\ b\ )\ 1/EJ\ = 1/3\ b/EJ$

$L^{XX}_{HI} = \int_o^b (1 -2\ x/b + x^2/b^2)\ 1/EJ\ dx = [\ x - x^2/b + 1/3\ x^3/b^2\ ]_o^b\ 1/EJ$

$= (\ b - b + 1/3\ b\ )\ 1/EJ\ = 1/3\ b/EJ$

$L^{XX}_{IH} = \int_o^b (\ x^2/b^2\ )\ 1/EJ\ dx = [1/3\ x^3/b^2\ ]_o^b\ 1/EJ$

$= (1/3\ b\ )\ 1/EJ\ = 1/3\ b/EJ$

$L^{XX}_{HG} = \int_o^b (1\ )\ 1/EJ\ dx = [\ x\ ]_o^b\ 1/EJ$

$= (\ b\ )\ 1/EJ\ =\ b/EJ$

$L^{XX}_{GH} = \int_o^b (1\ )\ 1/EJ\ dx = [\ x\ ]_o^b\ 1/EJ$

$= (\ b\ )\ 1/EJ\ =\ b/EJ$

$L^{Xo}_{GA} = \int_o^b (3/2\ x/b - 3/2\ x^2/b^2\ )\ Fb\ 1/EJ\ dx = [3/4\ x^2/b - 1/2\ x^3/b^2\ ]_o^b\ Fb\ 1/EJ$

$= (3/4\ b - 1/2\ b\ )\ Fb\ 1/EJ\ = 1/4\ \ Fb^2/EJ$

$L^{Xo}_{AG} = \int_o^b (3/2\ x/b - 3/2\ x^2/b^2\ )\ Fb\ 1/EJ\ dx = [3/4\ x^2/b - 1/2\ x^3/b^2\ ]_o^b\ Fb\ 1/EJ$

$= (3/4\ b - 1/2\ b\ )\ Fb\ 1/EJ\ = 1/4\ \ Fb^2/EJ$

$L^{Xo}_{HI} = \int_o^b (-1/2 + 3/2\ x/b - 3/2\ x^2/b^2 + 1/2\ x^3/b^3\ )\ Fb\ 1/EJ\ dx$

$= [-1/2\ x + 3/4\ x^2/b - 1/2\ x^3/b^2 + 1/8\ x^4/b^3\ ]_o^b\ Fb\ 1/EJ$

$= (-1/2\ b + 3/4\ b - 1/2\ b + 1/8\ b\ )\ Fb\ 1/EJ\ = -1/8\ \ Fb^2/EJ$

$L^{Xo}_{IH} = \int_o^b (-1/2\ x^3/b^3\ )\ Fb\ 1/EJ\ dx = [-1/8\ x^4/b^3\ ]_o^b\ Fb\ 1/EJ$

$= (-1/8\ b\ )\ Fb\ 1/EJ\ = -1/8\ \ Fb^2/EJ$

$L^{Xo}_{HG} = \int_o^b (1/4 - 1/4\ x/b\ )\ Fb\ 1/EJ\ dx - 1\ \ (-1)\ \ (-1)\ \ Fb^2/EJ$

$= [1/4\ x - 1/8\ x^2/b\ ]_o^b\ Fb\ 1/EJ\ - 1\ \ (-1)\ \ (-1)\ \ Fb^2/EJ$

$= (1/4\ b - 1/8\ b\ )\ Fb\ 1/EJ\ - 1\ \ (-1)\ \ (-1)\ \ Fb^2/EJ = -7/8\ \ Fb^2/EJ$

$L^{Xo}_{GH} = \int_o^b (1/4\ x/b\ )\ Fb\ 1/EJ\ dx - 1\ \ (-1)\ \ (-1)\ \ Fb^2/EJ = [1/8\ x^2/b\ ]_o^b\ Fb\ 1/EJ\ - 1\ \ (-1)\ \ (-1)\ \ Fb^2/EJ$

$= (1/8\ b\ )\ Fb\ 1/EJ\ - 1\ \ (-1)\ \ (-1)\ \ Fb^2/EJ = -7/8\ \ Fb^2/EJ$

PROCEDIMENTO E RISULTATI 237363 ESΣ05.xxxx.046

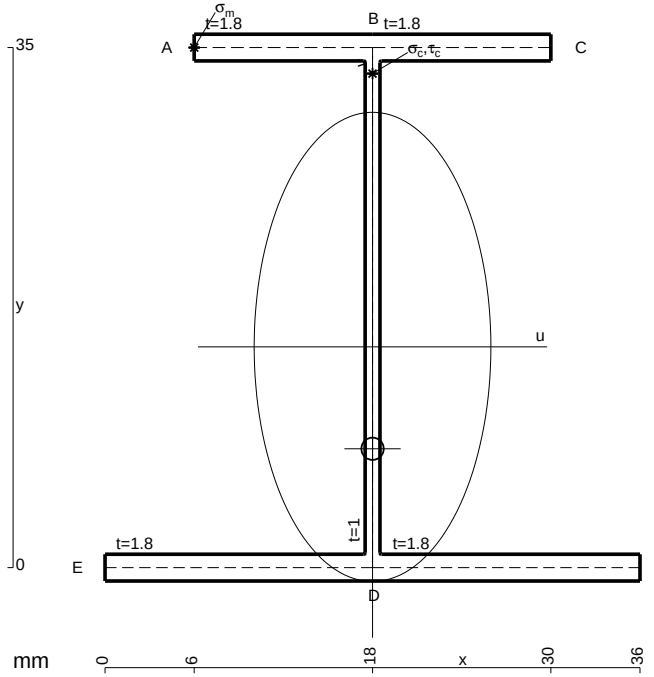

A = 143. mm^2
J_u = 35649. mm^4
J_v = 9072. mm^4
J_t = 128.3 mm^4
y_o = -6.857 mm
y_g = 14.86 mm
N = -127.5 N
T_y = 765. N
M_x = -367200. Nmm
x_m = 6. mm
y_m = 35. mm
u_m = -12. mm
v_m = 20.14 mm
$\sigma_m = N/A - Mv/J_u$ = 206.6 N/mm^2
x_c = 18. mm
y_c = 35. mm
v_c = 20.14 mm
$\sigma_c = N/A - Mv/J_u$ = 206.6 N/mm^2
$\tau_c = TS^*/tJ_u$ = 18.67 N/mm^2
$\tau_g = TS^*/tJ_u$ = 18.67 N/mm^2
t_c = 510. mm
$\sigma_o = \sqrt{\sigma^2 + 3\tau^2}$ = 209.1 N/mm^2

@ Adolfo Zavelani Rossi, Politecnico di Milano, vers.27.03.13 01.12.25

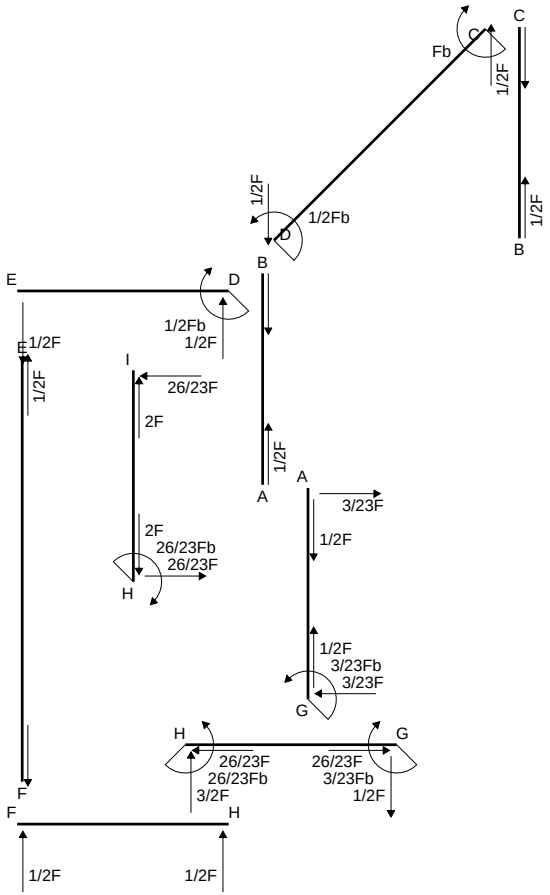
C
Fb
1/2F
1/2F
1/2Fb
D
B
E
D
1/2Fb
1/2F
1/2F
I
26/23F
2F
1/2F
A
3/23F
1/2F
2F
26/23Fb
26/23F
H
1/2F
3/23Fb
3/23F
G
H
G
26/23F
26/23Fb
3/2F
26/23F
3/23Fb
1/2F
F
F
H
1/2F
1/2F

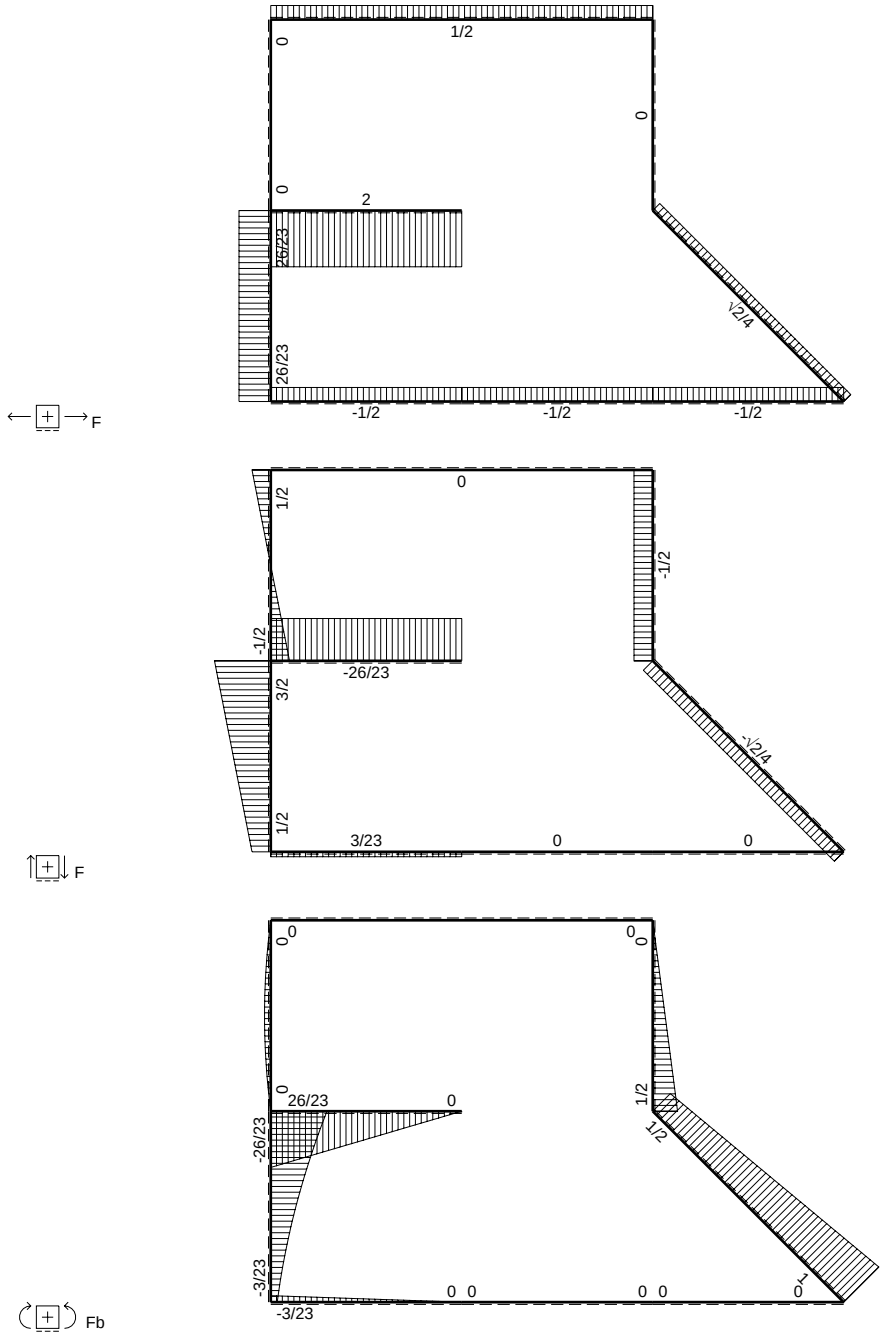
F
1/2
0
0
0
2
26/23
26/23
√2/4
26/23
-1/2
-1/2
-1/2
F
1/2
0
-1/2
-1/2
-26/23
3/2
√2/4
1/2
3/23
0
0
F
0
0
0
0
26/23
0
1/2
-26/23
1/2
√2
-3/23
0 0
0 0
0
-3/23
Fb

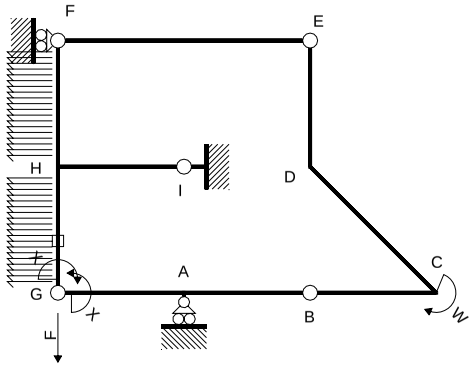

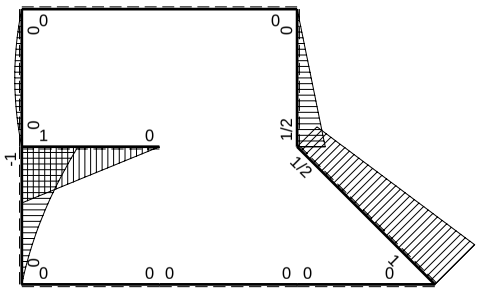

M_0 flessione da carichi assegnati

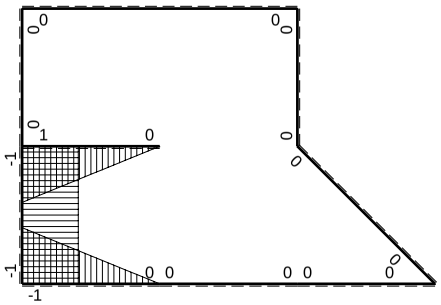

M_x flessione da iperstatica X=1

Quadro contributi PLV per iperstatica $X=W_{GA}$

→	$M_x(x)$	$M_o(x)$	M_xM_o	M_xM_x	$\int M_xM_o/EJdx$	$\int XM_xM_x/EJdx$
AB b	0	0	0	0	0	0
BA b	0	0	0	0		
BC b	0	0	0	0	0	0
CB b	0	0	0	0		
CD √2b	0	Fb-√2/4Fx	0	0	0	0
DE b	0	1/2Fb-1/2Fx	0	0	0	0
ED b	0	-1/2Fx	0	0		
EF 2b	0	0	0	0	0	0
FE 2b	0	0	0	0		
GA b	-1+x/b	0	0	$1-2x/b+x^2/b^2$	0	1/3Xb/EJ
AG b	x/b	0	0	x^2/b^2		
FH b	0	$1/2Fx-1/2qx^2$	0	0	0	0
HF b	0	$-1/2Fx+1/2qx^2$	0	0		
HI b	1-x/b	Fb-Fx	$Fb-2Fx+Fx^2/b$	$1-2x/b+x^2/b^2$	$1/3Fb^2/EJ$	1/3Xb/EJ
IH b	-x/b	-Fx	Fx^2/b	x^2/b^2		
HG b	-1	$-Fb+3/2Fx-1/2qx^2$	$Fb-3/2Fx+1/2Fx^2/b$	1	$5/12Fb^2/EJ$	Xb/EJ
GH b	1	$1/2Fx+1/2qx^2$	$1/2Fx+1/2Fx^2/b$	1		
HG	elongazione asta $N_{1HG}\varepsilon_{HG}L_{HG}$				$-Fb^2/EJ$	
A	molla nodo $-V_{1A}(V_{0A}+XV_{1A})/k_A$					1/4Xb/EJ
	totali				$-1/4Fb^2/EJ$	23/12Xb/EJ
	iperstatica $X=W_{GA}$				3/23Fb	

Sviluppi di calcolo iperstatica

$L^{XX}_{GA} = \int_o^b (1 - 2\,x/b + x^2/b^2)\ 1/EJ\ dx = [\ x - x^2/b + 1/3\ x^3/b^2\ ]_o^b\ 1/EJ$

$= (\ b - b + 1/3\ b\ )\ 1/EJ\ = 1/3\ b/EJ$

$L^{XX}_{AG} = \int_o^b (\ x^2/b^2\ )\ 1/EJ\ dx = [1/3\ x^3/b^2\ ]_o^b\ 1/EJ$

$= (1/3\ b\ )\ 1/EJ\ = 1/3\ b/EJ$

$L^{XX}_{HI} = \int_o^b (1 - 2\,x/b + x^2/b^2)\ 1/EJ\ dx = [\ x - x^2/b + 1/3\ x^3/b^2\ ]_o^b\ 1/EJ$

$= (\ b - b + 1/3\ b\ )\ 1/EJ\ = 1/3\ b/EJ$

$L^{XX}_{IH} = \int_o^b (\ x^2/b^2\ )\ 1/EJ\ dx = [1/3\ x^3/b^2\ ]_o^b\ 1/EJ$

$= (1/3\ b\ )\ 1/EJ\ = 1/3\ b/EJ$

$L^{XX}_{HG} = \int_o^b (1)\ 1/EJ\ dx = [\ x\ ]_o^b\ 1/EJ$

$= (\ b\ )\ 1/EJ\ =\ b/EJ$

$L^{XX}_{GH} = \int_o^b (1)\ 1/EJ\ dx = [\ x\ ]_o^b\ 1/EJ$

$= (\ b\ )\ 1/EJ\ =\ b/EJ$

$L^{Xo}_{HI} = \int_o^b (1 - 2\,x/b + x^2/b^2)\ Fb\ 1/EJ\ dx = [\ x - x^2/b + 1/3\ x^3/b^2\ ]_o^b\ Fb\ 1/EJ$

$= (\ b - b + 1/3\ b\ )\ Fb\ 1/EJ\ = 1/3\ Fb^2/EJ$

$L^{Xo}_{IH} = \int_o^b (\ x^2/b^2\ )\ Fb\ 1/EJ\ dx = [1/3\ x^3/b^2\ ]_o^b\ Fb\ 1/EJ$

$= (1/3\ b\ )\ Fb\ 1/EJ\ = 1/3\ Fb^2/EJ$

$L^{Xo}_{HG} = \int_o^b (1 - 3/2\,x/b + 1/2\ x^2/b^2)\ Fb\ 1/EJ\ dx - 1\ \ (-1)\ \ (-1)\ \ Fb^2/EJ$

$= [\ x - 3/4\ x^2/b + 1/6\ x^3/b^2\ ]_o^b\ Fb\ 1/EJ\ -\ 1\ \ (-1)\ \ (-1)\ \ Fb^2/EJ$

$= (\ b - 3/4\ b + 1/6\ b\ )\ Fb\ 1/EJ\ -\ 1\ \ (-1)\ \ (-1)\ \ Fb^2/EJ = -7/12\ \ Fb^2/EJ$

$L^{Xo}_{GH} = \int_o^b (1/2\,x/b + 1/2\ x^2/b^2)\ Fb\ 1/EJ\ dx - 1\ \ (-1)\ \ (-1)\ \ Fb^2/EJ$

$= [1/4\ x^2/b + 1/6\ x^3/b^2\ ]_o^b\ Fb\ 1/EJ\ -\ 1\ \ (-1)\ \ (-1)\ \ Fb^2/EJ$

$= (1/4\ b + 1/6\ b\ )\ Fb\ 1/EJ\ -\ 1\ \ (-1)\ \ (-1)\ \ Fb^2/EJ = -7/12\ \ Fb^2/EJ$

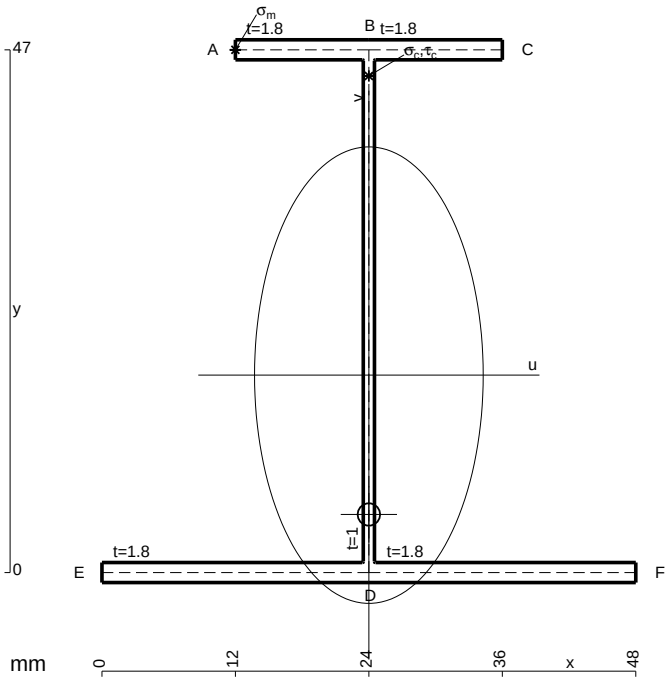

A = 176.6 mm^2
J_u = 74388. mm^4
J_v = 18662. mm^4
J_t = 155.6 mm^4
y_o = -12.53 mm
y_g = 17.75 mm
N = 289.9 N
T_y = -289.9 N
M_x = 557600. Nmm
x_m = 12. mm
y_m = 47. mm
u_m = -12. mm
v_m = 29.25 mm
$\sigma_m = N/A - Mv/J_u$ = -217.6 N/mm^2
x_c = 24. mm
y_c = 47. mm
v_c = 29.25 mm
$\sigma_c = N/A - Mv/J_u$ = -217.6 N/mm^2
$\tau_c = TS^*/tJ_u$ = 4.924 N/mm^2
$\tau_g = TS^*/tJ_u$ = 4.924 N/mm^2
t_c = 820. mm
$\sigma_o = \sqrt{\sigma^2 + 3\tau^2}$ = 217.8 N/mm^2

ESΣ05.xxxx.047

@ Adolfo Zavelani Rossi, Politecnico di Milano, vers.27.03.13 01.12.25

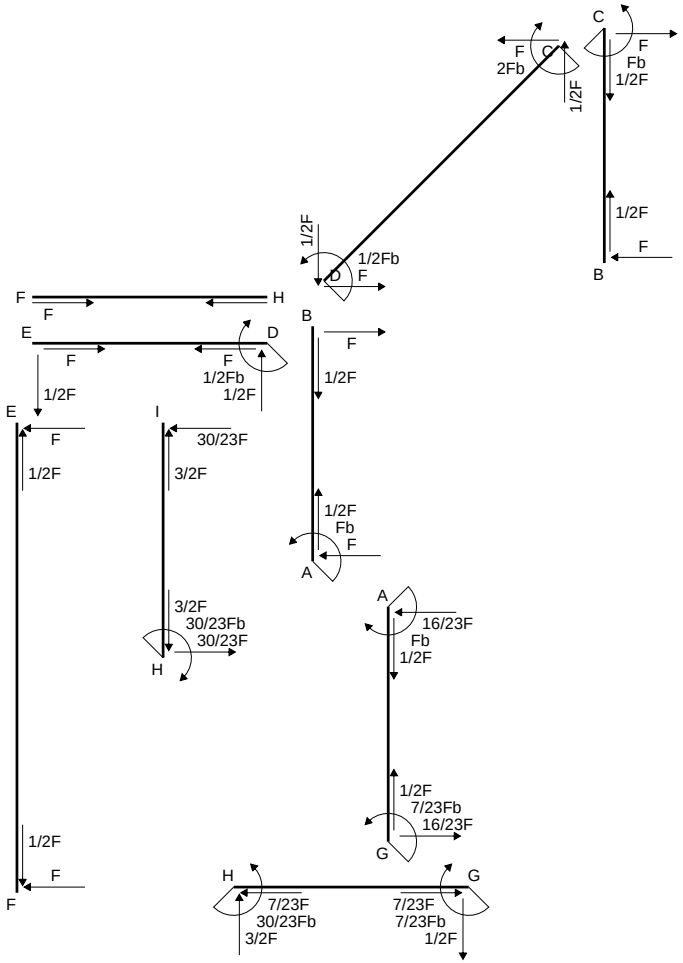
C
F
2Fb
C
1/2F
F
Fb
1/2F
1/2F
F
B
1/2F
1/2Fb
F
D
F
H
F
E
D
F
F
1/2Fb
1/2F
1/2F
B
F
1/2F
E
F
1/2F
I
30/23F
3/2F
1/2F
Fb
F
A
3/2F
30/23Fb
30/23F
H
A
16/23F
Fb
1/2F
1/2F
7/23Fb
16/23F
G
1/2F
F
F
H
7/23F
30/23Fb
3/2F
7/23F
7/23Fb
1/2F
G

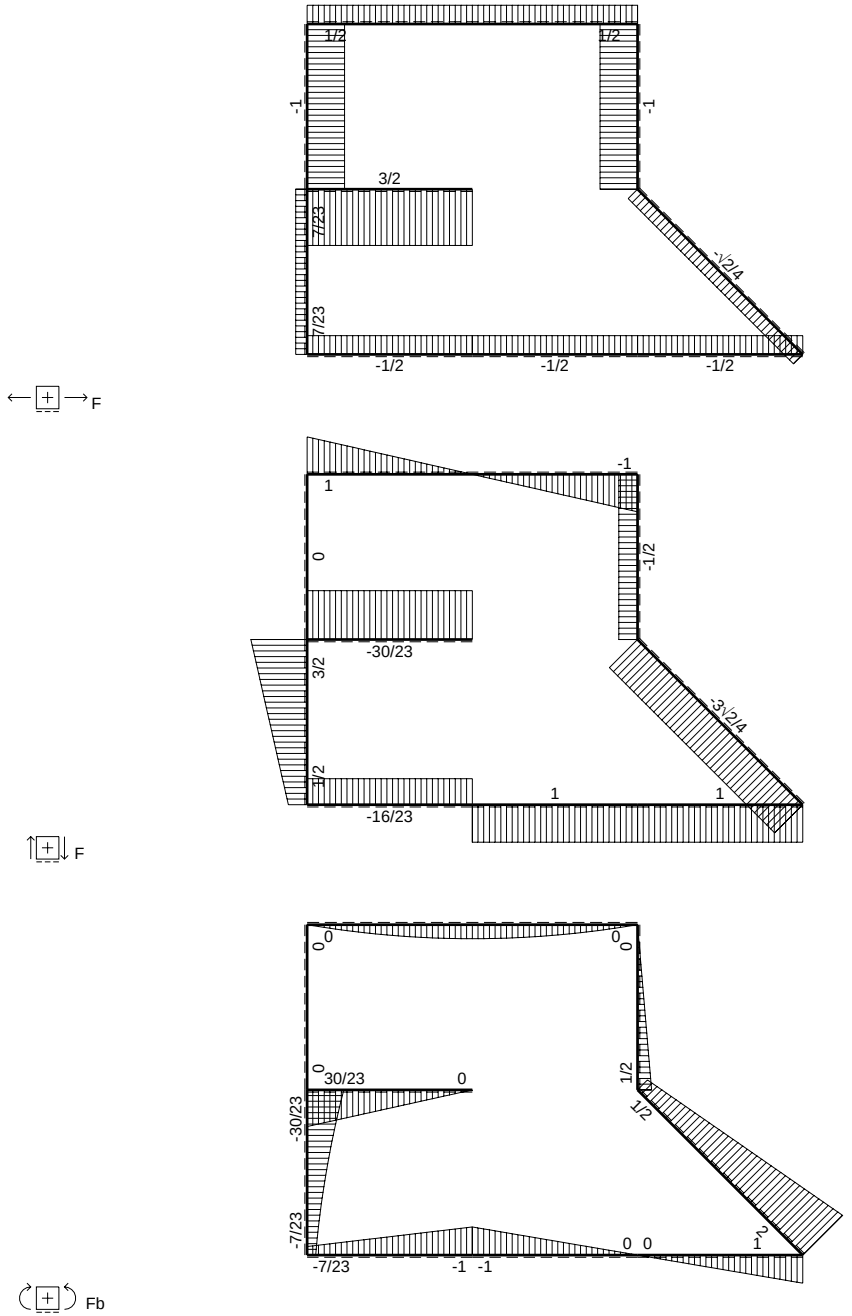
F
1/2
1/2
-1
-1
3/2
7/23
-1/2√2/4
7/23
-1/2
-1/2
-1/2
F
-1
1
0
-1/2
-30/23
3/2
-3√2/4
7/2
1
1
-16/23
F
0
0
0
0
30/23
0
1/2
1/2
-30/23
-7/23
0 0
2
1
-7/23
-1 -1
Fb

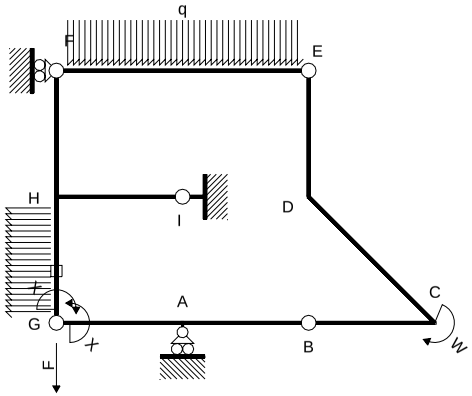

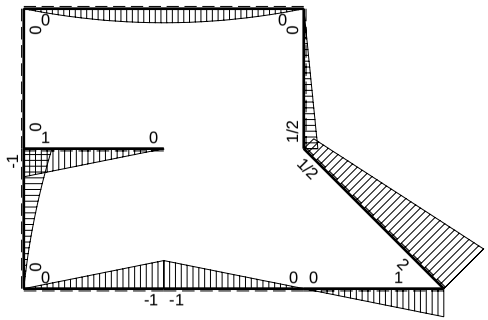

M_0 flessione da carichi assegnati

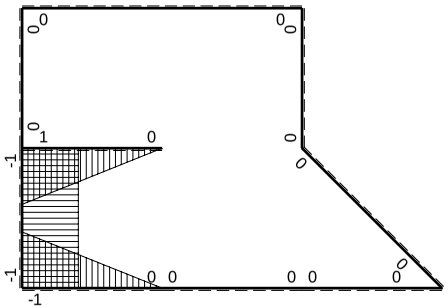

M_x flessione da iperstatica X=1

Quadro contributi PLV per iperstatica $X=W_{GA}$

→	$M_x(x)$	$M_o(x)$	M_xM_o	M_xM_x	$\int M_xM_o/EJdx$	$\int XM_xM_x/EJdx$
AB b	0	-Fb+Fx	0	0	0	0
BA b	0	Fx	0	0		
BC b	0	Fx	0	0	0	0
CB b	0	-Fb+Fx	0	0		
CD √2b	0	2Fb-3√2/4Fx	0	0	0	0
DE b	0	1/2Fb-1/2Fx	0	0	0	0
ED b	0	-1/2Fx	0	0		
EF 2b	0	$-Fx+1/2qx^2$	0	0	0	0
FE 2b	0	$Fx-1/2qx^2$	0	0		
GA b	-1+x/b	-Fx	$Fx-Fx^2/b$	$1-2x/b+x^2/b^2$	$1/6Fb^2/EJ$	1/3Xb/EJ
AG b	x/b	Fb-Fx	$Fx-Fx^2/b$	x^2/b^2		
FH b	0	0	0	0	0	0
HF b	0	0	0	0		
HI b	1-x/b	Fb-Fx	$Fb-2Fx+Fx^2/b$	$1-2x/b+x^2/b^2$	$1/3Fb^2/EJ$	1/3Xb/EJ
IH b	-x/b	-Fx	Fx^2/b	x^2/b^2		
HG b	-1	$-Fb+3/2Fx-1/2qx^2$	$Fb-3/2Fx+1/2Fx^2/b$	1	$5/12Fb^2/EJ$	Xb/EJ
GH b	1	$1/2Fx+1/2qx^2$	$1/2Fx+1/2Fx^2/b$	1		
HG	elongazione asta $N_{1HG}\varepsilon_{HG}L_{HG}$				$-Fb^2/EJ$	
A	molla nodo $-V_{1A}(V_{0A}+XV_{1A})/k_A$				$-1/2Fb^2/EJ$	1/4Xb/EJ
	totali				$-7/12Fb^2/EJ$	23/12Xb/EJ
	iperstatica $X=W_{GA}$				7/23Fb	

Sviluppi di calcolo iperstatica

$L^{XX}_{GA} = \int_o^b (1 - 2\,x/b + x^2/b^2)\ 1/EJ\ dx = [\ x - x^2/b + 1/3\ x^3/b^2\ ]_o^b\ 1/EJ$

$= (\ b - b + 1/3\ b\ )\ 1/EJ\ = 1/3\ b/EJ$

$L^{XX}_{AG} = \int_o^b (\ x^2/b^2\ )\ 1/EJ\ dx = [1/3\ x^3/b^2\ ]_o^b\ 1/EJ$

$= (1/3\ b\ )\ 1/EJ\ = 1/3\ b/EJ$

$L^{XX}_{HI} = \int_o^b (1 - 2\,x/b + x^2/b^2)\ 1/EJ\ dx = [\ x - x^2/b + 1/3\ x^3/b^2\ ]_o^b\ 1/EJ$

$= (\ b - b + 1/3\ b\ )\ 1/EJ\ = 1/3\ b/EJ$

$L^{XX}_{IH} = \int_o^b (\ x^2/b^2\ )\ 1/EJ\ dx = [1/3\ x^3/b^2\ ]_o^b\ 1/EJ$

$= (1/3\ b\ )\ 1/EJ\ = 1/3\ b/EJ$

$L^{XX}_{HG} = \int_o^b (1)\ 1/EJ\ dx = [\ x\ ]_o^b\ 1/EJ$

$= (\ b\ )\ 1/EJ\ =\ b/EJ$

$L^{XX}_{GH} = \int_o^b (1)\ 1/EJ\ dx = [\ x\ ]_o^b\ 1/EJ$

$= (\ b\ )\ 1/EJ\ =\ b/EJ$

$L^{Xo}_{GA} = \int_o^b (\ x/b - x^2/b^2\ )\ Fb\ 1/EJ\ dx = [1/2\ x^2/b - 1/3\ x^3/b^2\ ]_o^b\ Fb\ 1/EJ$

$= (1/2\ b - 1/3\ b\ )\ Fb\ 1/EJ\ = 1/6\ \ Fb^2/EJ$

$L^{Xo}_{AG} = \int_o^b (\ x/b - x^2/b^2\ )\ Fb\ 1/EJ\ dx = [1/2\ x^2/b - 1/3\ x^3/b^2\ ]_o^b\ Fb\ 1/EJ$

$= (1/2\ b - 1/3\ b\ )\ Fb\ 1/EJ\ = 1/6\ \ Fb^2/EJ$

$L^{Xo}_{HI} = \int_o^b (1 - 2\,x/b + x^2/b^2)\ Fb\ 1/EJ\ dx = [\ x - x^2/b + 1/3\ x^3/b^2\ ]_o^b\ Fb\ 1/EJ$

$= (\ b - b + 1/3\ b\ )\ Fb\ 1/EJ\ = 1/3\ \ Fb^2/EJ$

$L^{Xo}_{IH} = \int_o^b (\ x^2/b^2\ )\ Fb\ 1/EJ\ dx = [1/3\ x^3/b^2\ ]_o^b\ Fb\ 1/EJ$

$= (1/3\ b\ )\ Fb\ 1/EJ\ = 1/3\ \ Fb^2/EJ$

$L^{Xo}_{HG} = \int_o^b (1 - 3/2\ x/b + 1/2\ x^2/b^2)\ Fb\ 1/EJ\ dx - 1\ \ (-1)\ \ (-1)\ \ Fb^2/EJ$

$= [\ x - 3/4\ x^2/b + 1/6\ x^3/b^2\ ]_o^b\ Fb\ 1/EJ\ - 1\ \ (-1)\ \ (-1)\ \ Fb^2/EJ$

$= (\ b - 3/4\ b + 1/6\ b\ )\ Fb\ 1/EJ\ - 1\ \ (-1)\ \ (-1)\ \ Fb^2/EJ = -7/12\ \ Fb^2/EJ$

$L^{Xo}_{GH} = \int_o^b (1/2\ x/b + 1/2\ x^2/b^2)\ Fb\ 1/EJ\ dx - 1\ \ (-1)\ \ (-1)\ \ Fb^2/EJ$

$= [1/4\ x^2/b + 1/6\ x^3/b^2\ ]_o^b\ Fb\ 1/EJ\ - 1\ \ (-1)\ \ (-1)\ \ Fb^2/EJ$

$= (1/4\ b + 1/6\ b\ )\ Fb\ 1/EJ\ - 1\ \ (-1)\ \ (-1)\ \ Fb^2/EJ = -7/12\ \ Fb^2/EJ$

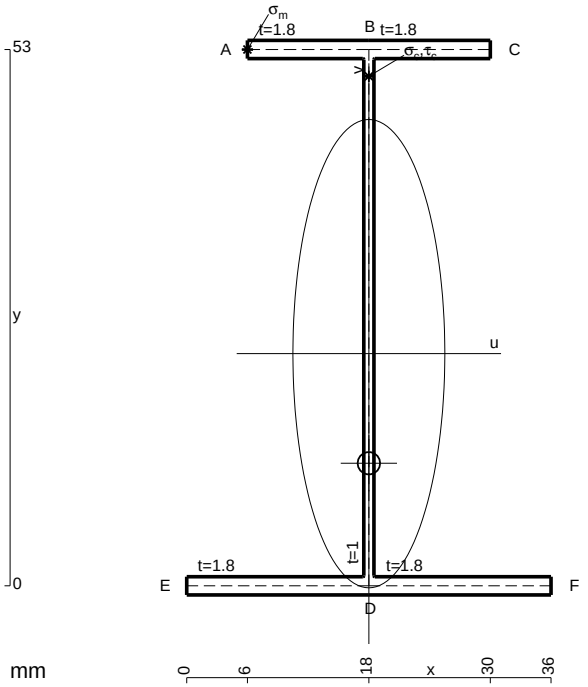

A = 161. mm^2
J_u = 86214. mm^4
J_v = 9072. mm^4
J_t = 134.3 mm^4
y_o = -10.83 mm
y_g = 22.94 mm
N = -141.4 N
T_y = -424.3 N
M_x = 648000. Nmm
x_m = 6. mm
y_m = 53. mm
u_m = -12. mm
v_m = 30.06 mm
$\sigma_m = N/A - Mv/J_u$ = -226.8 N/mm^2
x_c = 18. mm
y_c = 53. mm
v_c = 30.06 mm
$\sigma_c = N/A - Mv/J_u$ = -226.8 N/mm^2
$\tau_c = TS^*/tJ_u$ = 6.389 N/mm^2
$\tau_g = TS^*/tJ_u$ = 6.389 N/mm^2
t_c = 400. mm
$\sigma_o = \sqrt{\sigma^2 + 3\tau^2}$ = 227. N/mm^2

ESΣ05.xxxx.048

@ Adolfo Zavelani Rossi, Politecnico di Milano, vers.27.03.13 01.12.25

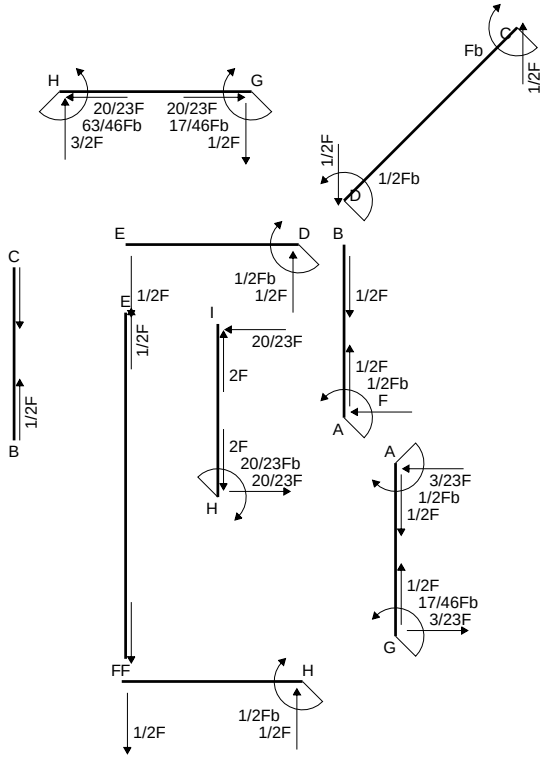
H
G
20/23F
63/46Fb
3/2F
20/23F
17/46Fb
1/2F
Fb
C
1/2F
1/2F
D
1/2Fb
E
D
B
C
E
1/2F
1/2Fb
1/2F
1/2F
I
20/23F
2F
1/2F
1/2Fb
F
A
1/2F
B
2F
20/23Fb
20/23F
H
A
3/23F
1/2Fb
1/2F
1/2F
17/46Fb
3/23F
G
FF
H
1/2Fb
1/2F
1/2F

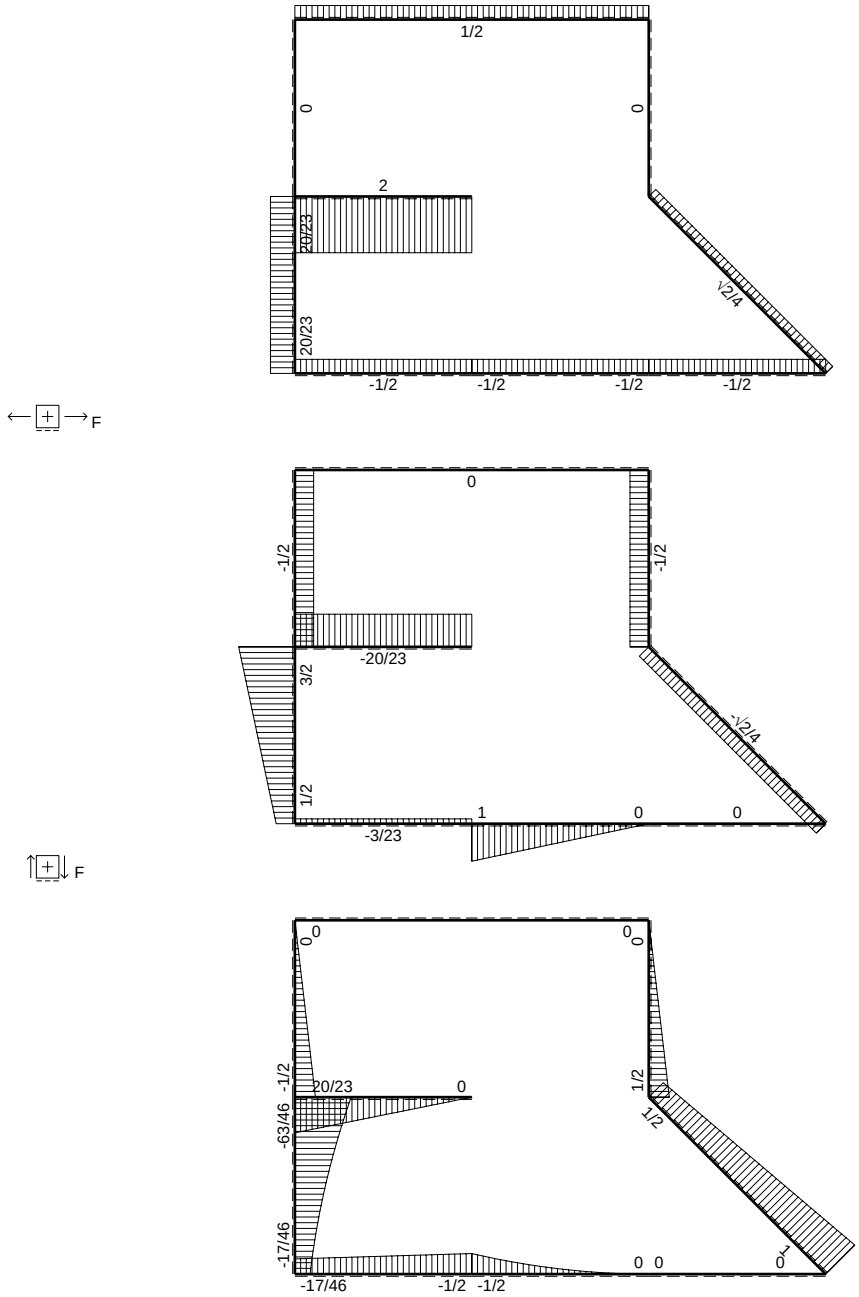
1/2
0
0
2
20/23
20/23
1/2/4
-1/2
-1/2
-1/2
-1/2
F
0
-1/2
-1/2
-20/23
3/2
-1/2/4
1/2
1
0
0
-3/23
F
0
0
0
0
-1/2
20/23
0
1/2
-63/46
1/2
-17/46
0 0
0
-17/46
-1/2 -1/2
Fb

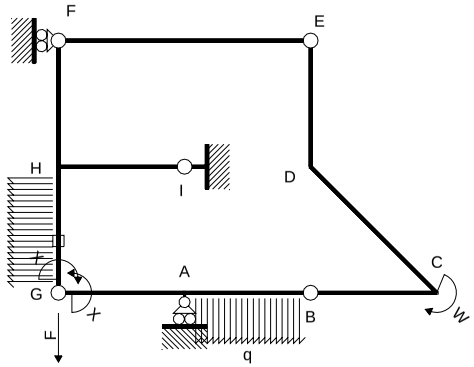

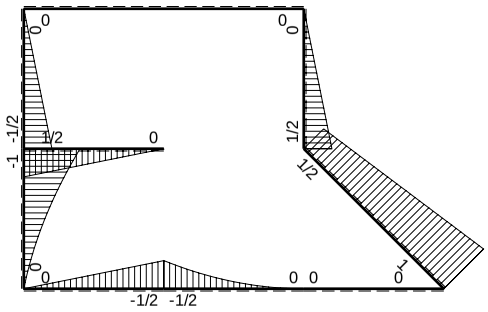

M_0 flessione da carichi assegnati

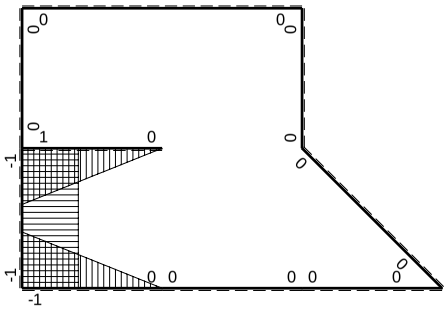

M_x flessione da iperstatica X=1

Quadro contributi PLV per iperstatica $X=W_{GA}$

→	$M_x(x)$	$M_o(x)$	M_xM_o	M_xM_x	$\int M_xM_o/EJdx$	$\int XM_xM_x/EJdx$
AB b	0	$-1/2Fb+Fx-1/2qx^2$	0	0	0	0
BA b	0	$1/2qx^2$	0	0		
BC b	0	0	0	0	0	0
CB b	0	0	0	0		
CD $\sqrt{2}$b	0	$Fb-\sqrt{2}/4Fx$	0	0	0	0
DE b	0	$1/2Fb-1/2Fx$	0	0	0	0
ED b	0	$-1/2Fx$	0	0		
EF 2b	0	0	0	0	0	0
FE 2b	0	0	0	0		
GA b	$-1+x/b$	$-1/2Fx$	$1/2Fx-1/2Fx^2/b$	$1-2x/b+x^2/b^2$	$1/12Fb^2/EJ$	$1/3Xb/EJ$
AG b	x/b	$1/2Fb-1/2Fx$	$1/2Fx-1/2Fx^2/b$	x^2/b^2		
FH b	0	$-1/2Fx$	0	0	0	0
HF b	0	$1/2Fb-1/2Fx$	0	0		
HI b	$1-x/b$	$1/2Fb-1/2Fx$	$1/2Fb-Fx+1/2Fx^2/b$	$1-2x/b+x^2/b^2$	$1/6Fb^2/EJ$	$1/3Xb/EJ$
IH b	$-x/b$	$-1/2Fx$	$1/2Fx^2/b$	x^2/b^2		
HG b	-1	$-Fb+3/2Fx-1/2qx^2$	$Fb-3/2Fx+1/2Fx^2/b$	1	$5/12Fb^2/EJ$	Xb/EJ
GH b	1	$1/2Fx+1/2qx^2$	$1/2Fx+1/2Fx^2/b$	1		
HG	elongazione asta $N_{1HG}\varepsilon_{HG}L_{HG}$				$-Fb^2/EJ$	
A	molla nodo $-V_{1A}(V_{0A}+XV_{1A})/k_A$				$-3/8Fb^2/EJ$	$1/4Xb/EJ$
	totali				$-17/24Fb^2/EJ$	$23/12Xb/EJ$
	iperstatica $X=W_{GA}$				17/46Fb	

Sviluppi di calcolo iperstatica

$L^{XX}_{GA} = \int_o^b (1 - 2\,x/b + x^2/b^2)\ 1/EJ\ dx = [\ x - x^2/b + 1/3\ x^3/b^2\ ]_o^b\ 1/EJ$

$= (\ b - b + 1/3\ b\ )\ 1/EJ\ = 1/3\ b/EJ$

$L^{XX}_{AG} = \int_o^b (\ x^2/b^2\ )\ 1/EJ\ dx = [1/3\ x^3/b^2\ ]_o^b\ 1/EJ$

$= (1/3\ b\ )\ 1/EJ\ = 1/3\ b/EJ$

$L^{XX}_{HI} = \int_o^b (1 - 2\,x/b + x^2/b^2)\ 1/EJ\ dx = [\ x - x^2/b + 1/3\ x^3/b^2\ ]_o^b\ 1/EJ$

$= (\ b - b + 1/3\ b\ )\ 1/EJ\ = 1/3\ b/EJ$

$L^{XX}_{IH} = \int_o^b (\ x^2/b^2\ )\ 1/EJ\ dx = [1/3\ x^3/b^2\ ]_o^b\ 1/EJ$

$= (1/3\ b\ )\ 1/EJ\ = 1/3\ b/EJ$

$L^{XX}_{HG} = \int_o^b (1)\ 1/EJ\ dx = [\ x\ ]_o^b\ 1/EJ$

$= (\ b\ )\ 1/EJ\ =\ b/EJ$

$L^{XX}_{GH} = \int_o^b (1)\ 1/EJ\ dx = [\ x\ ]_o^b\ 1/EJ$

$= (\ b\ )\ 1/EJ\ =\ b/EJ$

$L^{Xo}_{GA} = \int_o^b (1/2\ x/b - 1/2\ x^2/b^2)\ Fb\ 1/EJ\ dx = [1/4\ x^2/b - 1/6\ x^3/b^2\ ]_o^b\ Fb\ 1/EJ$

$= (1/4\ b - 1/6\ b\ )\ Fb\ 1/EJ\ = 1/12\ \ Fb^2/EJ$

$L^{Xo}_{AG} = \int_o^b (1/2\ x/b - 1/2\ x^2/b^2)\ Fb\ 1/EJ\ dx = [1/4\ x^2/b - 1/6\ x^3/b^2\ ]_o^b\ Fb\ 1/EJ$

$= (1/4\ b - 1/6\ b\ )\ Fb\ 1/EJ\ = 1/12\ \ Fb^2/EJ$

$L^{Xo}_{HI} = \int_o^b (1/2 - x/b + 1/2\ x^2/b^2)\ Fb\ 1/EJ\ dx = [1/2\ x - 1/2\ x^2/b + 1/6\ x^3/b^2\ ]_o^b\ Fb\ 1/EJ$

$= (1/2\ b - 1/2\ b + 1/6\ b\ )\ Fb\ 1/EJ\ = 1/6\ \ Fb^2/EJ$

$L^{Xo}_{IH} = \int_o^b (1/2\ x^2/b^2)\ Fb\ 1/EJ\ dx = [1/6\ x^3/b^2\ ]_o^b\ Fb\ 1/EJ$

$= (1/6\ b\ )\ Fb\ 1/EJ\ = 1/6\ \ Fb^2/EJ$

$L^{Xo}_{HG} = \int_o^b (1 - 3/2\ x/b + 1/2\ x^2/b^2)\ Fb\ 1/EJ\ dx - 1\ \ (-1)\ \ (-1)\ \ Fb^2/EJ$

$= [\ x - 3/4\ x^2/b + 1/6\ x^3/b^2\ ]_o^b\ Fb\ 1/EJ\ - 1\ \ (-1)\ \ (-1)\ \ Fb^2/EJ$

$= (\ b - 3/4\ b + 1/6\ b\ )\ Fb\ 1/EJ\ - 1\ \ (-1)\ \ (-1)\ \ Fb^2/EJ = -7/12\ \ Fb^2/EJ$

$L^{Xo}_{GH} = \int_o^b (1/2\ x/b + 1/2\ x^2/b^2)\ Fb\ 1/EJ\ dx - 1\ \ (-1)\ \ (-1)\ \ Fb^2/EJ$

$= [1/4\ x^2/b + 1/6\ x^3/b^2\ ]_o^b\ Fb\ 1/EJ\ - 1\ \ (-1)\ \ (-1)\ \ Fb^2/EJ$

$= (1/4\ b + 1/6\ b\ )\ Fb\ 1/EJ\ - 1\ \ (-1)\ \ (-1)\ \ Fb^2/EJ = -7/12\ \ Fb^2/EJ$

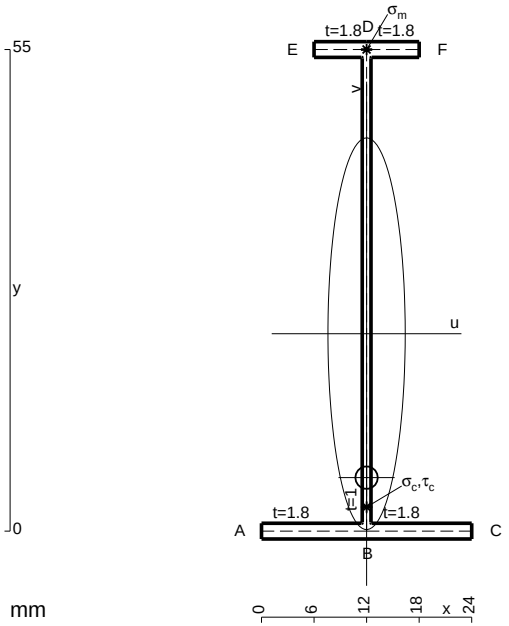

A = 119.8 mm^2
J_u = 59924. mm^4
J_v = 2333. mm^4
J_t = 88.32 mm^4
y_o = -16.43 mm
y_g = 22.54 mm
N = -505. N
T_y = 1010. N
M_x = -449450. Nmm
x_m = 12. mm
y_m = 55. mm
v_m = 32.46 mm
$\sigma_m = N/A - Mv/J_u$ = 239.2 N/mm^2
x_c = 12. mm
v_c = -22.54 mm
$\sigma_c = N/A - Mv/J_u$ = -173.3 N/mm^2
$\tau_c = TS^*/tJ_u$ = 16.41 N/mm^2
$\tau_g = TS^*/tJ_u$ = 16.41 N/mm^2
t_c = 1010. mm
$\sigma_o = \sqrt{\sigma^2 + 3\tau^2}$ = 175.6 N/mm^2

ESΣ05.xxxx.049

@ Adolfo Zavelani Rossi, Politecnico di Milano, vers.27.03.13 01.12.25

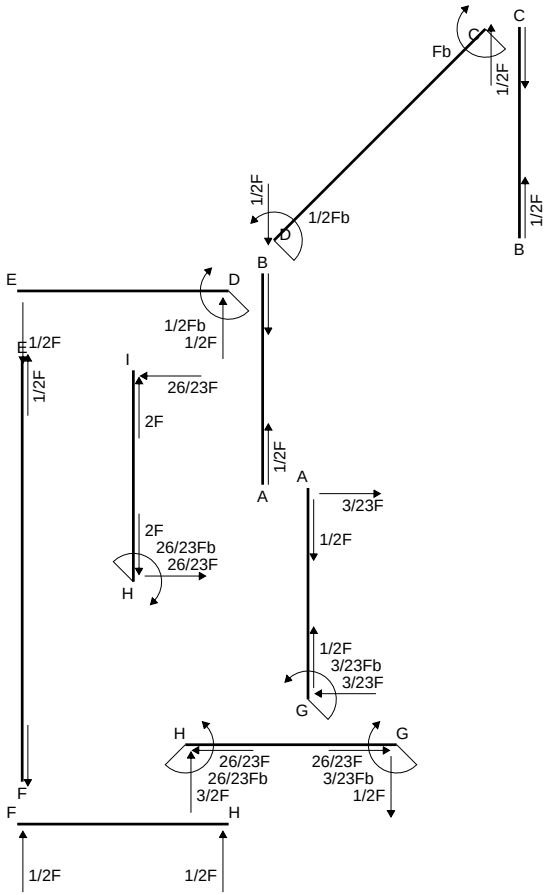
C
Fb
1/2F
1/2F
1/2Fb
D
B
1/2F
B
E
D
1/2Fb
1/2F
1/2F
I
26/23F
2F
1/2F
A
A
3/23F
1/2F
2F
26/23Fb
26/23F
H
1/2F
3/23Fb
3/23F
G
H
G
26/23F
26/23Fb
3/2F
26/23F
3/23Fb
1/2F
F
F
H
1/2F
1/2F

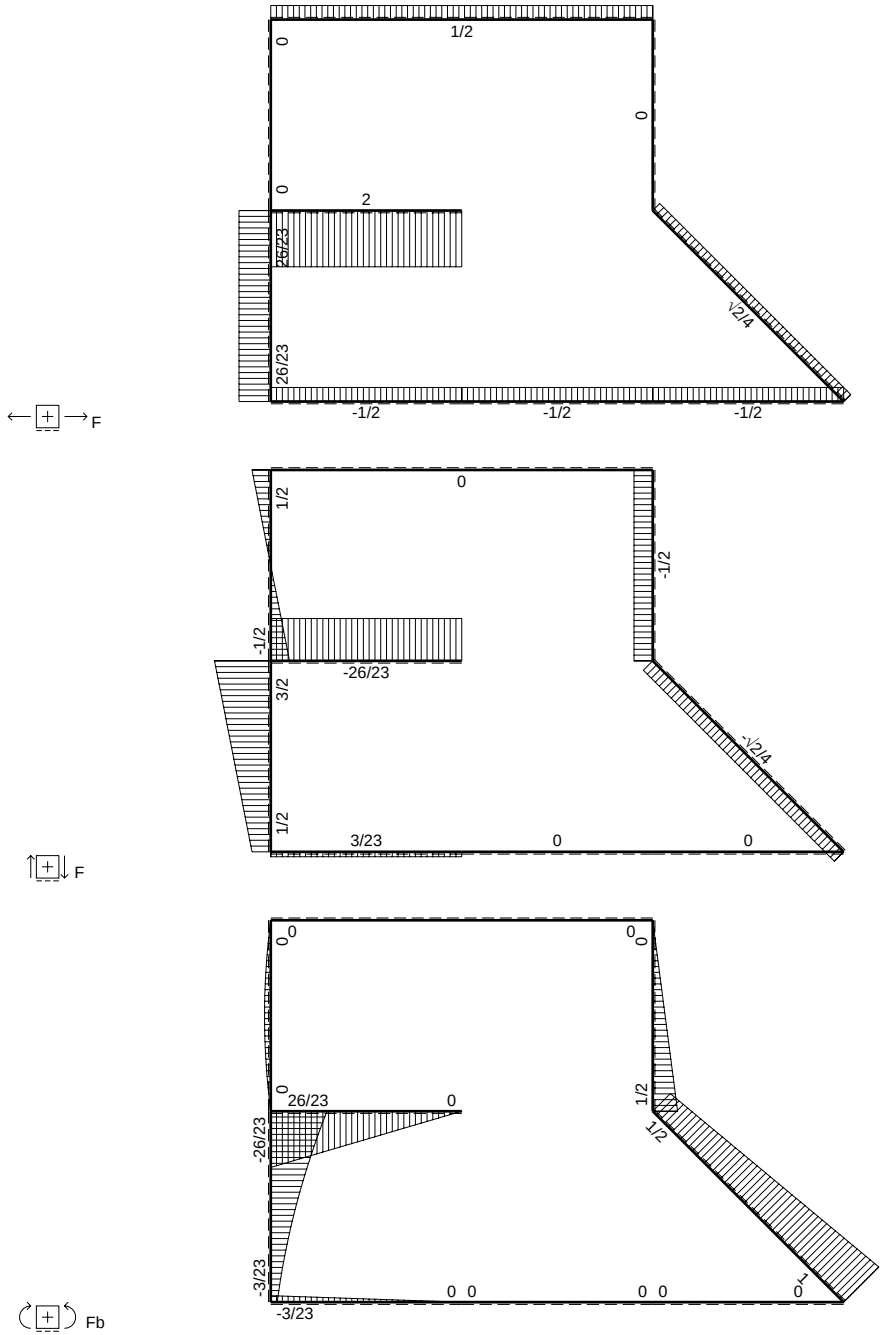
F
1/2
0
0
0
2
26/23
26/23
√2/4
26/23
-1/2
-1/2
-1/2
F
0
1/2
-1/2
-1/2
-26/23
3/2
√2/4
1/2
3/23
0
0
Fb
0
0
0
0
26/23
0
1/2
-26/23
1/2
-3/23
0 0
0 0
0
-3/23

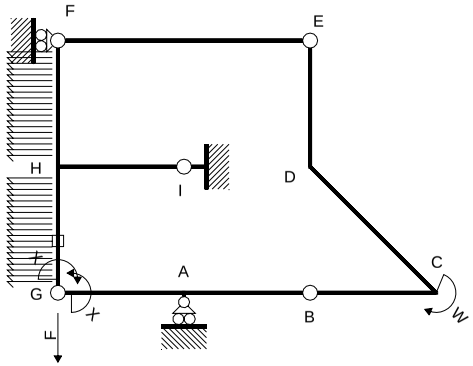

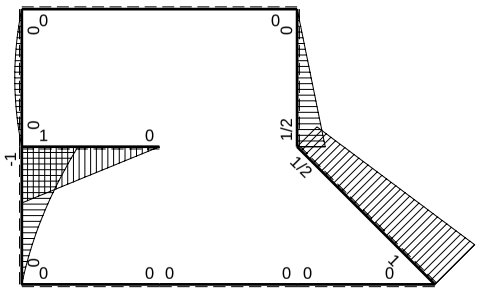

M_0 flessione da carichi assegnati

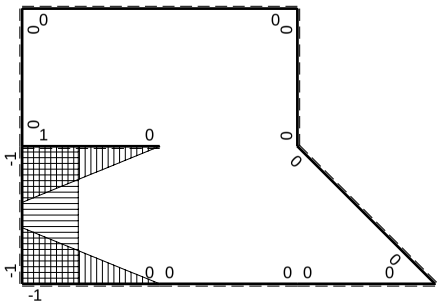

M_x flessione da iperstatica X=1

Quadro contributi PLV per iperstatica $X=W_{GA}$

→	$M_x(x)$	$M_o(x)$	M_xM_o	M_xM_x	$\int M_xM_o/EJdx$	$\int XM_xM_x/EJdx$
AB b	0	0	0	0	0	0
BA b	0	0	0	0		
BC b	0	0	0	0	0	0
CB b	0	0	0	0		
CD √2b	0	Fb-√2/4Fx	0	0	0	0
DE b	0	1/2Fb-1/2Fx	0	0	0	0
ED b	0	-1/2Fx	0	0		
EF 2b	0	0	0	0	0	0
FE 2b	0	0	0	0		
GA b	-1+x/b	0	0	$1-2x/b+x^2/b^2$	0	1/3Xb/EJ
AG b	x/b	0	0	x^2/b^2		
FH b	0	$1/2Fx-1/2qx^2$	0	0	0	0
HF b	0	$-1/2Fx+1/2qx^2$	0	0		
HI b	1-x/b	Fb-Fx	$Fb-2Fx+Fx^2/b$	$1-2x/b+x^2/b^2$	$1/3Fb^2/EJ$	1/3Xb/EJ
IH b	-x/b	-Fx	Fx^2/b	x^2/b^2		
HG b	-1	$-Fb+3/2Fx-1/2qx^2$	$Fb-3/2Fx+1/2Fx^2/b$	1	$5/12Fb^2/EJ$	Xb/EJ
GH b	1	$1/2Fx+1/2qx^2$	$1/2Fx+1/2Fx^2/b$	1		
HG	elongazione asta $N_{1HG}\varepsilon_{HG}L_{HG}$				$-Fb^2/EJ$	
A	molla nodo $-V_{1A}(V_{0A}+XV_{1A})/k_A$					1/4Xb/EJ
	totali				$-1/4Fb^2/EJ$	23/12Xb/EJ
	iperstatica $X=W_{GA}$				3/23Fb	

Sviluppi di calcolo iperstatica

$L^{XX}_{GA} = \int_o^b (1 - 2\,x/b + x^2/b^2)\ 1/EJ\ dx = [\,x - x^2/b + 1/3\,x^3/b^2\,]_o^b\ 1/EJ$

$= (\,b - b + 1/3\,b\,)\ 1/EJ = 1/3\ b/EJ$

$L^{XX}_{AG} = \int_o^b (\,x^2/b^2\,)\ 1/EJ\ dx = [1/3\,x^3/b^2\,]_o^b\ 1/EJ$

$= (1/3\,b\,)\ 1/EJ = 1/3\ b/EJ$

$L^{XX}_{HI} = \int_o^b (1 - 2\,x/b + x^2/b^2)\ 1/EJ\ dx = [\,x - x^2/b + 1/3\,x^3/b^2\,]_o^b\ 1/EJ$

$= (\,b - b + 1/3\,b\,)\ 1/EJ = 1/3\ b/EJ$

$L^{XX}_{IH} = \int_o^b (\,x^2/b^2\,)\ 1/EJ\ dx = [1/3\,x^3/b^2\,]_o^b\ 1/EJ$

$= (1/3\,b\,)\ 1/EJ = 1/3\ b/EJ$

$L^{XX}_{HG} = \int_o^b (1)\ 1/EJ\ dx = [\,x\,]_o^b\ 1/EJ$

$= (\,b\,)\ 1/EJ = b/EJ$

$L^{XX}_{GH} = \int_o^b (1)\ 1/EJ\ dx = [\,x\,]_o^b\ 1/EJ$

$= (\,b\,)\ 1/EJ = b/EJ$

$L^{Xo}_{HI} = \int_o^b (1 - 2\,x/b + x^2/b^2)\ Fb\ 1/EJ\ dx = [\,x - x^2/b + 1/3\,x^3/b^2\,]_o^b\ Fb\ 1/EJ$

$= (\,b - b + 1/3\,b\,)\ Fb\ 1/EJ = 1/3\ Fb^2/EJ$

$L^{Xo}_{IH} = \int_o^b (\,x^2/b^2\,)\ Fb\ 1/EJ\ dx = [1/3\,x^3/b^2\,]_o^b\ Fb\ 1/EJ$

$= (1/3\,b\,)\ Fb\ 1/EJ = 1/3\ Fb^2/EJ$

$L^{Xo}_{HG} = \int_o^b (1 - 3/2\,x/b + 1/2\,x^2/b^2)\ Fb\ 1/EJ\ dx - 1\ \ (-1)\ \ (-1)\ \ Fb^2/EJ$

$= [\,x - 3/4\,x^2/b + 1/6\,x^3/b^2\,]_o^b\ Fb\ 1/EJ\ -\ 1\ \ (-1)\ \ (-1)\ \ Fb^2/EJ$

$= (\,b - 3/4\,b + 1/6\,b\,)\ Fb\ 1/EJ\ -\ 1\ \ (-1)\ \ (-1)\ \ Fb^2/EJ = -7/12\ \ Fb^2/EJ$

$L^{Xo}_{GH} = \int_o^b (1/2\,x/b + 1/2\,x^2/b^2)\ Fb\ 1/EJ\ dx - 1\ \ (-1)\ \ (-1)\ \ Fb^2/EJ$

$= [1/4\,x^2/b + 1/6\,x^3/b^2\,]_o^b\ Fb\ 1/EJ\ -\ 1\ \ (-1)\ \ (-1)\ \ Fb^2/EJ$

$= (1/4\,b + 1/6\,b\,)\ Fb\ 1/EJ\ -\ 1\ \ (-1)\ \ (-1)\ \ Fb^2/EJ = -7/12\ \ Fb^2/EJ$

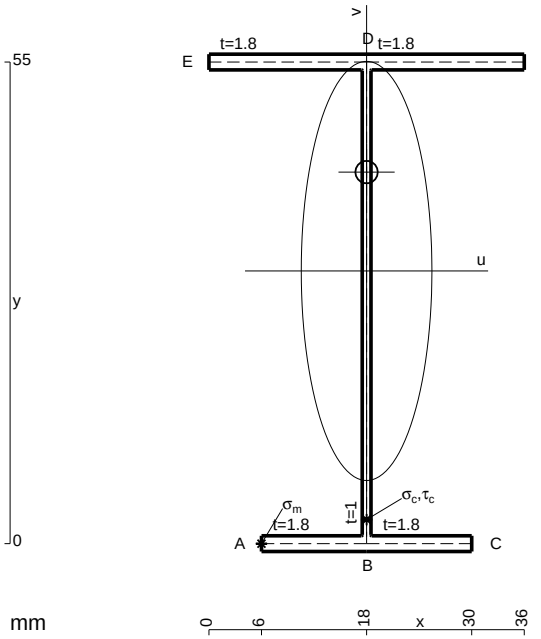

A = 163. mm^2
J_u = 93375. mm^4
J_v = 9072. mm^4
J_t = 135. mm^4
y_o = 11.28 mm
y_g = 31.14 mm
N = 441.9 N
T_y = -441.9 N
M_x = 587500. Nmm
x_m = 6. mm
u_m = -12. mm
v_m = -31.14 mm
$\sigma_m = N/A - Mv/J_u$ = 198.7 N/mm^2
x_c = 18. mm
v_c = -31.14 mm
$\sigma_c = N/A - Mv/J_u$ = 198.7 N/mm^2
$\tau_c = TS^*/tJ_u$ = 6.368 N/mm^2
$\tau_g = TS^*/tJ_u$ = 6.368 N/mm^2
t_c = 1250. mm
$\sigma_o = \sqrt{\sigma^2 + 3\tau^2}$ = 199. N/mm^2

ESΣ05.xxxx.050

@ Adolfo Zavelani Rossi, Politecnico di Milano, vers.27.03.13 01.12.25

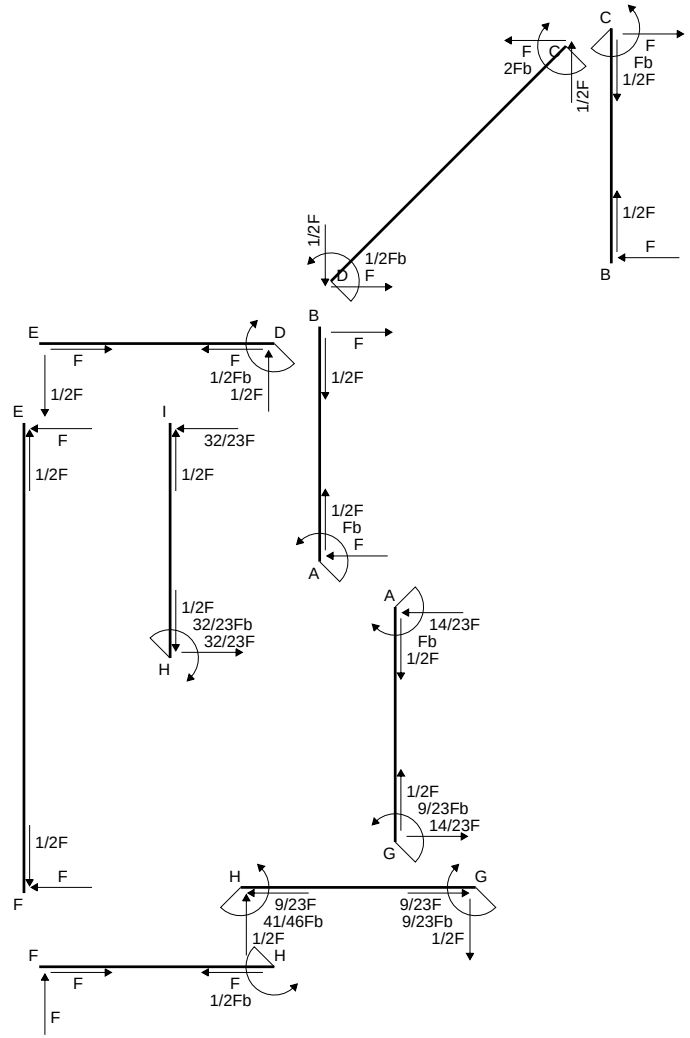
C
F
2Fb
C
1/2F
F
Fb
1/2F
1/2F
F
B
1/2F
1/2Fb
F
D
E
F
D
F
1/2Fb
1/2F
B
F
1/2F
E
F
1/2F
I
32/23F
1/2F
1/2F
Fb
F
A
1/2F
32/23Fb
32/23F
H
A
14/23F
Fb
1/2F
1/2F
9/23Fb
14/23F
G
1/2F
F
F
H
9/23F
41/46Fb
1/2F
H
G
9/23F
9/23Fb
1/2F
F
F
F
1/2Fb
F

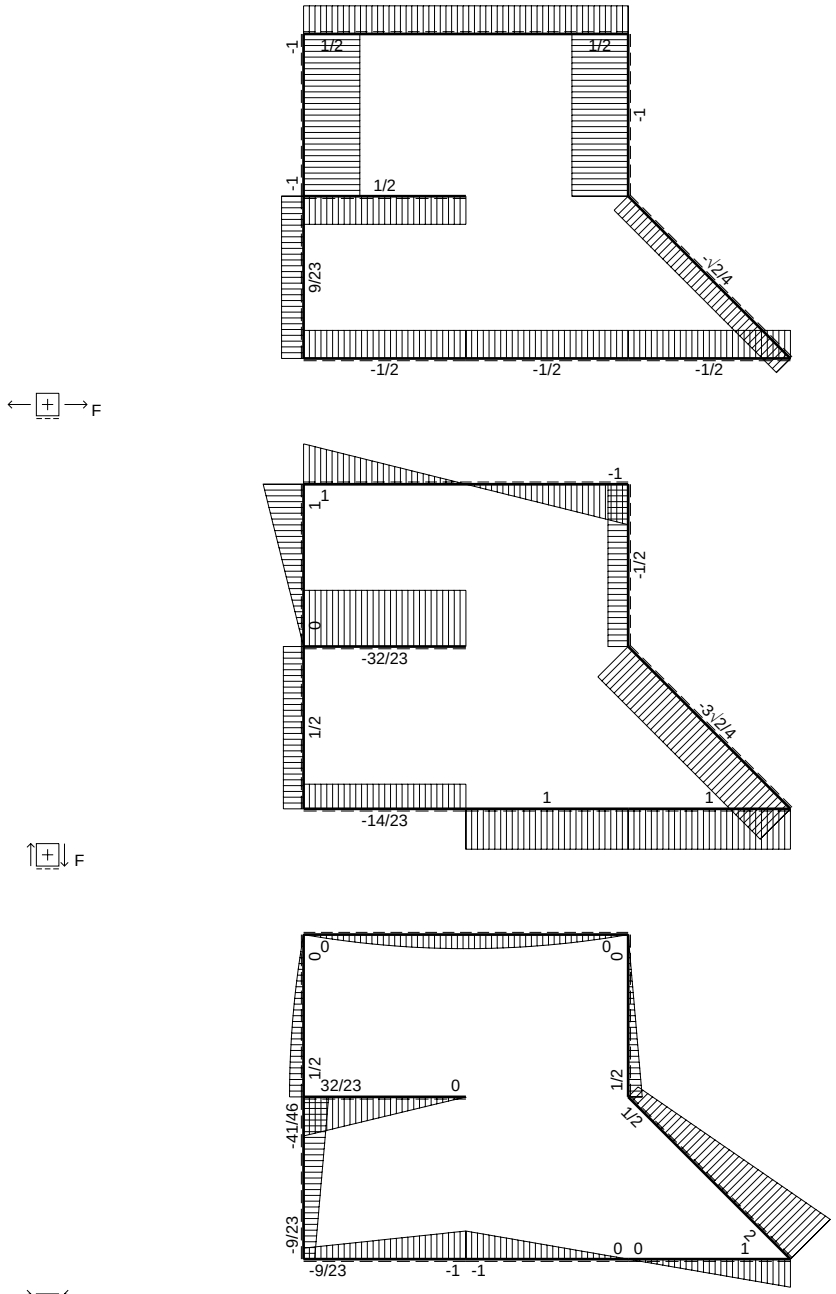
F
-1
1/2
1/2
-1
-1
1/2
9/23
-1/2
-1/2
-1/2
-1/2
F
-1
1
1
-1/2
0
-32/23
1/2
-3/2
-14/23
1
1
F
0
0
0
0
1/2
32/23
0
1/2
1/2
-41/46
-9/23
0 0
1
-9/23
-1 -1
Fb

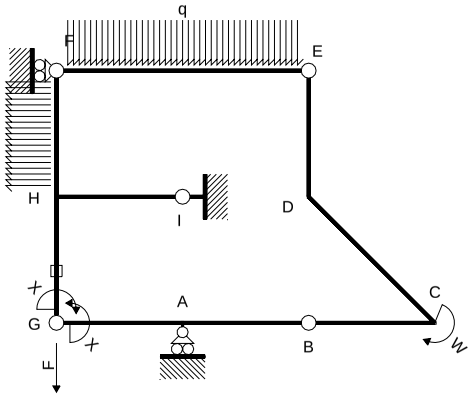

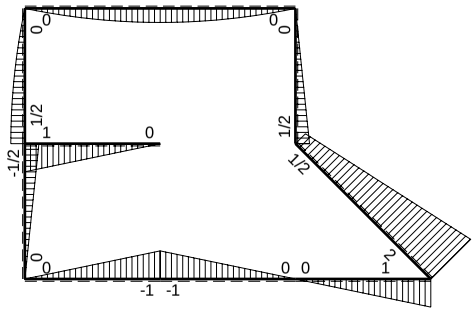

M_0 flessione da carichi assegnati

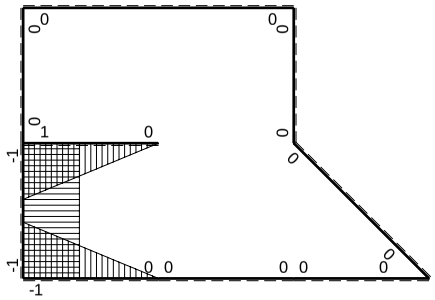

M_x flessione da iperstatica X=1

Quadro contributi PLV per iperstatica $X=W_{GA}$

→	$M_x(x)$	$M_o(x)$	M_xM_o	M_xM_x	$\int M_xM_o/EJdx$	$\int XM_xM_x/EJdx$
AB b	0	-Fb+Fx	0	0	0	0
BA b	0	Fx	0	0		
BC b	0	Fx	0	0	0	0
CB b	0	-Fb+Fx	0	0		
CD √2b	0	2Fb-3√2/4Fx	0	0	0	0
DE b	0	1/2Fb-1/2Fx	0	0	0	0
ED b	0	-1/2Fx	0	0		
EF 2b	0	$-Fx+1/2qx^2$	0	0	0	0
FE 2b	0	$Fx-1/2qx^2$	0	0		
GA b	-1+x/b	-Fx	$Fx-Fx^2/b$	$1-2x/b+x^2/b^2$	$1/6Fb^2/EJ$	1/3Xb/EJ
AG b	x/b	Fb-Fx	$Fx-Fx^2/b$	x^2/b^2		
FH b	0	$Fx-1/2qx^2$	0	0	0	0
HF b	0	$-1/2Fb+1/2qx^2$	0	0		
HI b	1-x/b	Fb-Fx	$Fb-2Fx+Fx^2/b$	$1-2x/b+x^2/b^2$	$1/3Fb^2/EJ$	1/3Xb/EJ
IH b	-x/b	-Fx	Fx^2/b	x^2/b^2		
HG b	-1	-1/2Fb+1/2Fx	1/2Fb-1/2Fx	1	$1/4Fb^2/EJ$	Xb/EJ
GH b	1	1/2Fx	1/2Fx	1		
HG	elongazione asta $N_{1HG}\varepsilon_{HG}L_{HG}$				$-Fb^2/EJ$	
A	molla nodo $-V_{1A}(V_{0A}+XV_{1A})/k_A$				$-1/2Fb^2/EJ$	1/4Xb/EJ
	totali				$-3/4Fb^2/EJ$	23/12Xb/EJ
	iperstatica $X=W_{GA}$				9/23Fb	

Sviluppi di calcolo iperstatica

$L^{XX}_{GA} = \int_o^b (1 - 2\,x/b + x^2/b^2)\ 1/EJ\ dx = [\,x - x^2/b + 1/3\,x^3/b^2\,]_o^b\ 1/EJ$

$= (\,b - b + 1/3\,b\,)\ 1/EJ = 1/3\ b/EJ$

$L^{XX}_{AG} = \int_o^b (\,x^2/b^2\,)\ 1/EJ\ dx = [1/3\,x^3/b^2\,]_o^b\ 1/EJ$

$= (1/3\,b)\ 1/EJ = 1/3\ b/EJ$

$L^{XX}_{HI} = \int_o^b (1 - 2\,x/b + x^2/b^2)\ 1/EJ\ dx = [\,x - x^2/b + 1/3\,x^3/b^2\,]_o^b\ 1/EJ$

$= (\,b - b + 1/3\,b\,)\ 1/EJ = 1/3\ b/EJ$

$L^{XX}_{IH} = \int_o^b (\,x^2/b^2\,)\ 1/EJ\ dx = [1/3\,x^3/b^2\,]_o^b\ 1/EJ$

$= (1/3\,b)\ 1/EJ = 1/3\ b/EJ$

$L^{XX}_{HG} = \int_o^b (1)\ 1/EJ\ dx = [\,x\,]_o^b\ 1/EJ$

$= (\,b\,)\ 1/EJ = b/EJ$

$L^{XX}_{GH} = \int_o^b (1)\ 1/EJ\ dx = [\,x\,]_o^b\ 1/EJ$

$= (\,b\,)\ 1/EJ = b/EJ$

$L^{Xo}_{GA} = \int_o^b (\,x/b - x^2/b^2\,)\ Fb\ 1/EJ\ dx = [1/2\,x^2/b - 1/3\,x^3/b^2\,]_o^b\ Fb\ 1/EJ$

$= (1/2\,b - 1/3\,b\,)\ Fb\ 1/EJ = 1/6\ Fb^2/EJ$

$L^{Xo}_{AG} = \int_o^b (\,x/b - x^2/b^2\,)\ Fb\ 1/EJ\ dx = [1/2\,x^2/b - 1/3\,x^3/b^2\,]_o^b\ Fb\ 1/EJ$

$= (1/2\,b - 1/3\,b\,)\ Fb\ 1/EJ = 1/6\ Fb^2/EJ$

$L^{Xo}_{HI} = \int_o^b (1 - 2\,x/b + x^2/b^2)\ Fb\ 1/EJ\ dx = [\,x - x^2/b + 1/3\,x^3/b^2\,]_o^b\ Fb\ 1/EJ$

$= (\,b - b + 1/3\,b\,)\ Fb\ 1/EJ = 1/3\ Fb^2/EJ$

$L^{Xo}_{IH} = \int_o^b (\,x^2/b^2\,)\ Fb\ 1/EJ\ dx = [1/3\,x^3/b^2\,]_o^b\ Fb\ 1/EJ$

$= (1/3\,b)\ Fb\ 1/EJ = 1/3\ Fb^2/EJ$

$L^{Xo}_{HG} = \int_o^b (1/2 - 1/2\,x/b)\ Fb\ 1/EJ\ dx - 1\ \ (-1)\ \ (-1)\ \ Fb^2/EJ$

$= [1/2\,x - 1/4\,x^2/b\,]_o^b\ Fb\ 1/EJ\ -\ 1\ \ (-1)\ \ (-1)\ \ Fb^2/EJ$

$= (1/2\,b - 1/4\,b\,)\ Fb\ 1/EJ\ -\ 1\ \ (-1)\ \ (-1)\ \ Fb^2/EJ = -3/4\ \ Fb^2/EJ$

$L^{Xo}_{GH} = \int_o^b (1/2\,x/b)\ Fb\ 1/EJ\ dx - 1\ \ (-1)\ \ (-1)\ \ Fb^2/EJ = [1/4\,x^2/b\,]_o^b\ Fb\ 1/EJ\ -\ 1\ \ (-1)\ \ (-1)\ \ Fb^2/EJ$

$= (1/4\,b)\ Fb\ 1/EJ\ -\ 1\ \ (-1)\ \ (-1)\ \ Fb^2/EJ = -3/4\ \ Fb^2/EJ$

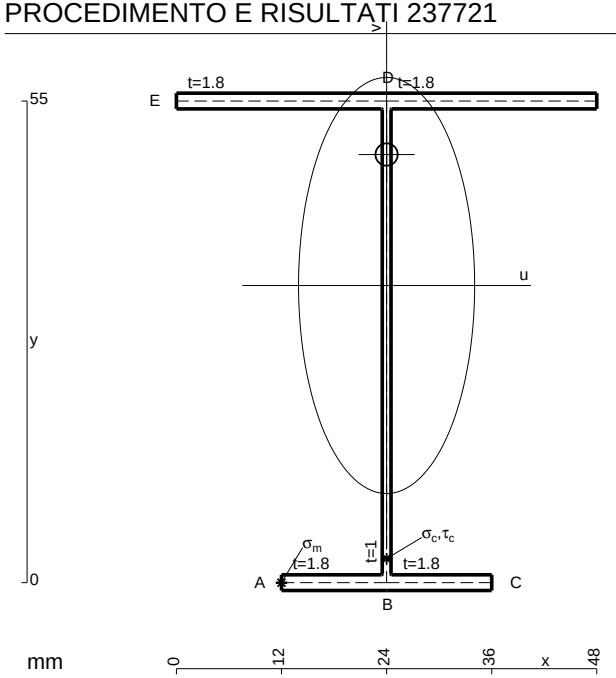

A = 184.6 mm^2
J_u = 104229. mm^4
J_v = 18662. mm^4
J_t = 158.3 mm^4
y_o = 14.95 mm
y_g = 33.94 mm
N = -222.7 N
T_y = -668.2 N
M_x = 642600. Nmm
x_m = 12. mm
u_m = -12. mm
v_m = -33.94 mm
$\sigma_m = N/A - Mv/J_u$ = 208. N/mm^2
x_c = 24. mm
v_c = -33.94 mm
$\sigma_c = N/A - Mv/J_u$ = 208. N/mm^2
$\tau_c = TS^*/tJ_u$ = 9.399 N/mm^2
$\tau_g = TS^*/tJ_u$ = 9.399 N/mm^2
t_c = 630. mm
$\sigma_o = \sqrt{\sigma^2 + 3\tau^2}$ = 208.7 N/mm^2

ESΣ05.xxxx.051

@ Adolfo Zavelani Rossi, Politecnico di Milano, vers.27.03.13 01.12.25

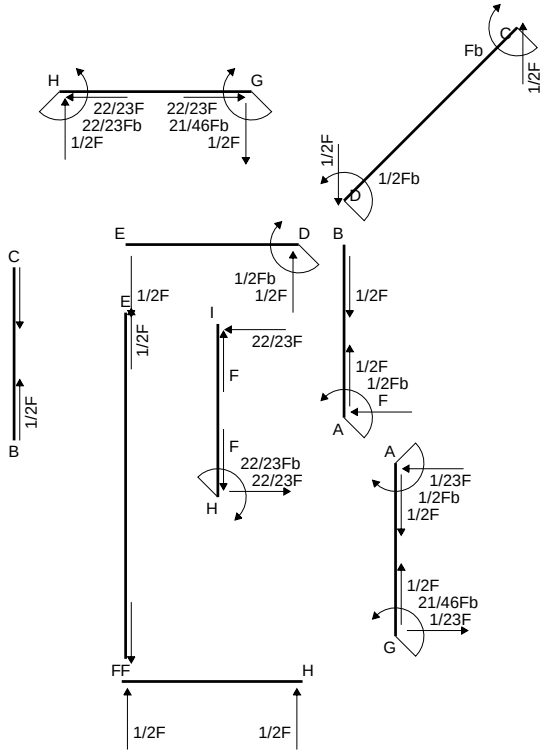
H
G
22/23F
22/23Fb
1/2F
22/23F
21/46Fb
1/2F
Fb
C
1/2F
1/2F
1/2Fb
D
E
D
B
C
1/2F
1/2Fb
1/2F
E
1/2F
1/2F
I
22/23F
F
1/2F
1/2Fb
F
A
1/2F
B
F
22/23Fb
22/23F
H
A
1/23F
1/2Fb
1/2F
1/2F
21/46Fb
1/23F
G
FF
H
1/2F
1/2F

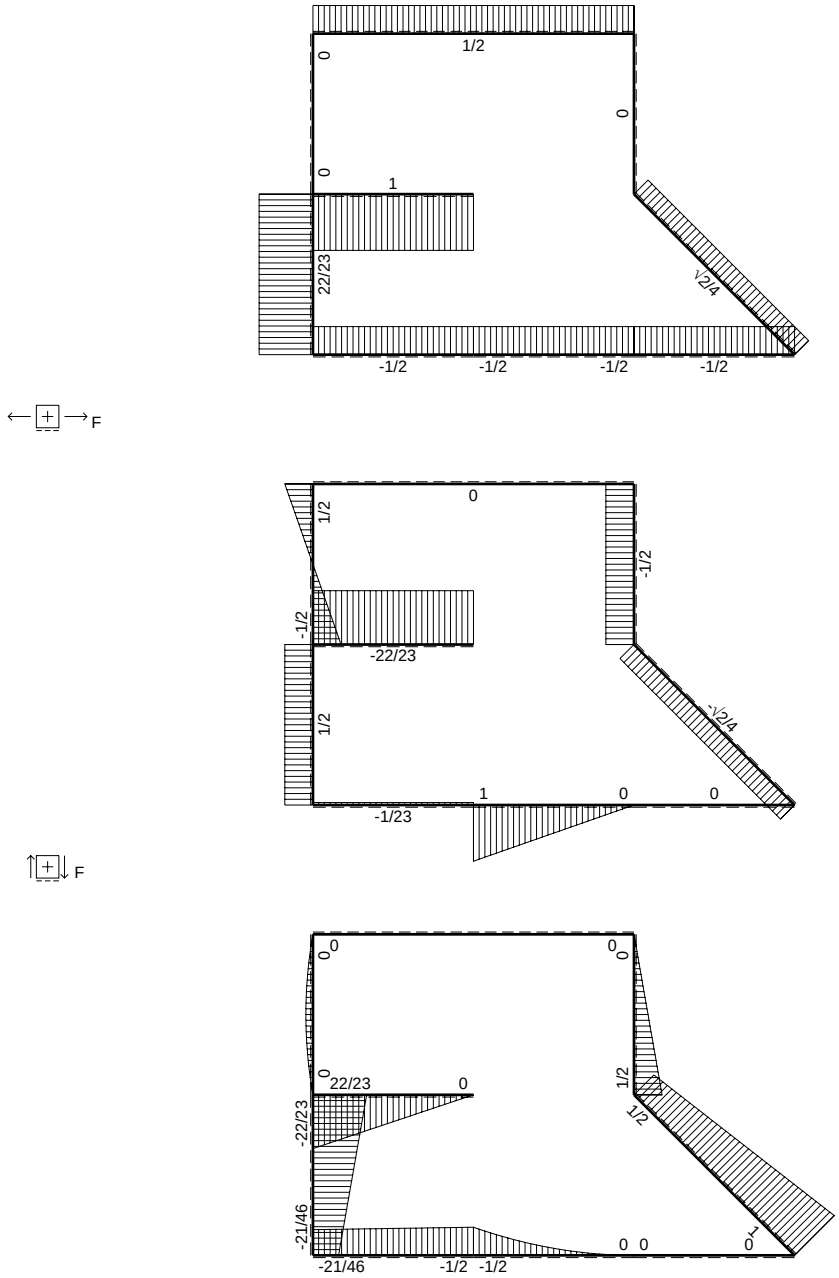
1/2
0
0
0
1
22/23
√2/4
-1/2
-1/2
-1/2
-1/2
F
0
1/2
-1/2
-1/2
-22/23
1/2
-√2/4
1
0
0
-1/23
F
0
0
0
0
0
22/23
0
1/2
1/2
-22/23
-21/46
1
0 0
0
-21/46
-1/2 -1/2
Fb

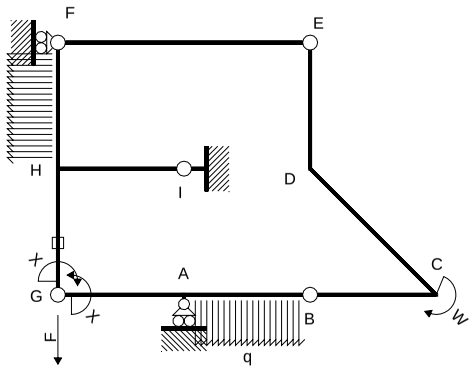

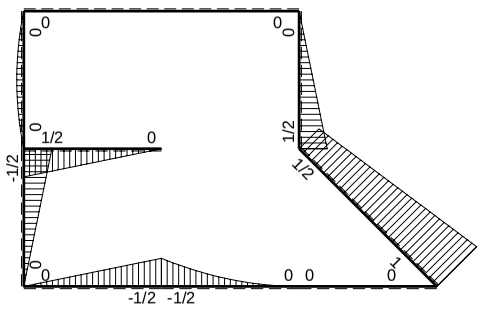

M_0 flessione da carichi assegnati

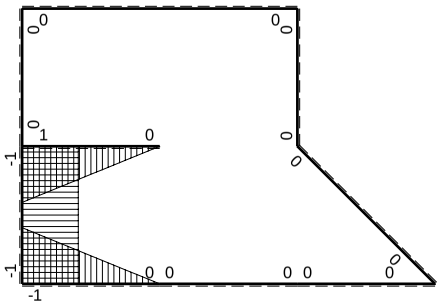

M_x flessione da iperstatica X=1

Quadro contributi PLV per iperstatica $X=W_{GA}$

→	$M_x(x)$	$M_o(x)$	M_xM_o	M_xM_x	$\int M_xM_o/EJdx$	$\int XM_xM_x/EJdx$
AB b	0	$-1/2Fb+Fx-1/2qx^2$	0	0	0	0
BA b	0	$1/2qx^2$	0	0		
BC b	0	0	0	0	0	0
CB b	0	0	0	0		
CD $\sqrt{2}b$	0	$Fb-\sqrt{2}/4Fx$	0	0	0	0
DE b	0	$1/2Fb-1/2Fx$	0	0	0	0
ED b	0	$-1/2Fx$	0	0		
EF 2b	0	0	0	0	0	0
FE 2b	0	0	0	0		
GA b	-1+x/b	$-1/2Fx$	$1/2Fx-1/2Fx^2/b$	$1-2x/b+x^2/b^2$	$1/12Fb^2/EJ$	$1/3Xb/EJ$
AG b	x/b	$1/2Fb-1/2Fx$	$1/2Fx-1/2Fx^2/b$	x^2/b^2		
FH b	0	$1/2Fx-1/2qx^2$	0	0	0	0
HF b	0	$-1/2Fx+1/2qx^2$	0	0		
HI b	1-x/b	$1/2Fb-1/2Fx$	$1/2Fb-Fx+1/2Fx^2/b$	$1-2x/b+x^2/b^2$	$1/6Fb^2/EJ$	$1/3Xb/EJ$
IH b	-x/b	$-1/2Fx$	$1/2Fx^2/b$	x^2/b^2		
HG b	-1	$-1/2Fb+1/2Fx$	$1/2Fb-1/2Fx$	1	$1/4Fb^2/EJ$	Xb/EJ
GH b	1	$1/2Fx$	$1/2Fx$	1		
HG	elongazione asta $N_{1HG}\varepsilon_{HG}L_{HG}$				$-Fb^2/EJ$	
A	molla nodo $-V_{1A}(V_{0A}+XV_{1A})/k_A$				$-3/8Fb^2/EJ$	$1/4Xb/EJ$
	totali				$-7/8Fb^2/EJ$	$23/12Xb/EJ$
	iperstatica $X=W_{GA}$				21/46Fb	

Sviluppi di calcolo iperstatica

$L^{XX}_{GA} = \int_o^b (1 - 2\,x/b + x^2/b^2)\ 1/EJ\ dx = [\,x - x^2/b + 1/3\,x^3/b^2\,]_o^b\ 1/EJ$

$= (\,b - b + 1/3\,b\,)\ 1/EJ = 1/3\ b/EJ$

$L^{XX}_{AG} = \int_o^b (\,x^2/b^2\,)\ 1/EJ\ dx = [1/3\,x^3/b^2\,]_o^b\ 1/EJ$

$= (1/3\,b)\ 1/EJ = 1/3\ b/EJ$

$L^{XX}_{HI} = \int_o^b (1 - 2\,x/b + x^2/b^2)\ 1/EJ\ dx = [\,x - x^2/b + 1/3\,x^3/b^2\,]_o^b\ 1/EJ$

$= (\,b - b + 1/3\,b\,)\ 1/EJ = 1/3\ b/EJ$

$L^{XX}_{IH} = \int_o^b (\,x^2/b^2\,)\ 1/EJ\ dx = [1/3\,x^3/b^2\,]_o^b\ 1/EJ$

$= (1/3\,b)\ 1/EJ = 1/3\ b/EJ$

$L^{XX}_{HG} = \int_o^b (1)\ 1/EJ\ dx = [\,x\,]_o^b\ 1/EJ$

$= (\,b\,)\ 1/EJ = b/EJ$

$L^{XX}_{GH} = \int_o^b (1)\ 1/EJ\ dx = [\,x\,]_o^b\ 1/EJ$

$= (\,b\,)\ 1/EJ = b/EJ$

$L^{Xo}_{GA} = \int_o^b (1/2\,x/b - 1/2\,x^2/b^2)\ Fb\ 1/EJ\ dx = [1/4\,x^2/b - 1/6\,x^3/b^2\,]_o^b\ Fb\ 1/EJ$

$= (1/4\,b - 1/6\,b)\ Fb\ 1/EJ = 1/12\ Fb^2/EJ$

$L^{Xo}_{AG} = \int_o^b (1/2\,x/b - 1/2\,x^2/b^2)\ Fb\ 1/EJ\ dx = [1/4\,x^2/b - 1/6\,x^3/b^2\,]_o^b\ Fb\ 1/EJ$

$= (1/4\,b - 1/6\,b)\ Fb\ 1/EJ = 1/12\ Fb^2/EJ$

$L^{Xo}_{HI} = \int_o^b (1/2 - x/b + 1/2\,x^2/b^2)\ Fb\ 1/EJ\ dx = [1/2\,x - 1/2\,x^2/b + 1/6\,x^3/b^2\,]_o^b\ Fb\ 1/EJ$

$= (1/2\,b - 1/2\,b + 1/6\,b)\ Fb\ 1/EJ = 1/6\ Fb^2/EJ$

$L^{Xo}_{IH} = \int_o^b (1/2\,x^2/b^2)\ Fb\ 1/EJ\ dx = [1/6\,x^3/b^2\,]_o^b\ Fb\ 1/EJ$

$= (1/6\,b)\ Fb\ 1/EJ = 1/6\ Fb^2/EJ$

$L^{Xo}_{HG} = \int_o^b (1/2 - 1/2\,x/b)\ Fb\ 1/EJ\ dx - 1\ \ (-1)\ \ (-1)\ \ Fb^2/EJ$

$= [1/2\,x - 1/4\,x^2/b\,]_o^b\ Fb\ 1/EJ\ - 1\ \ (-1)\ \ (-1)\ \ Fb^2/EJ$

$= (1/2\,b - 1/4\,b)\ Fb\ 1/EJ\ - 1\ \ (-1)\ \ (-1)\ \ Fb^2/EJ = -3/4\ \ Fb^2/EJ$

$L^{Xo}_{GH} = \int_o^b (1/2\,x/b)\ Fb\ 1/EJ\ dx - 1\ \ (-1)\ \ (-1)\ \ Fb^2/EJ = [1/4\,x^2/b\,]_o^b\ Fb\ 1/EJ\ - 1\ \ (-1)\ \ (-1)\ \ Fb^2/EJ$

$= (1/4\,b)\ Fb\ 1/EJ\ - 1\ \ (-1)\ \ (-1)\ \ Fb^2/EJ = -3/4\ \ Fb^2/EJ$

PROCEDIMENTO E RISULTATI 238387 ESΣ05.xxxx.052

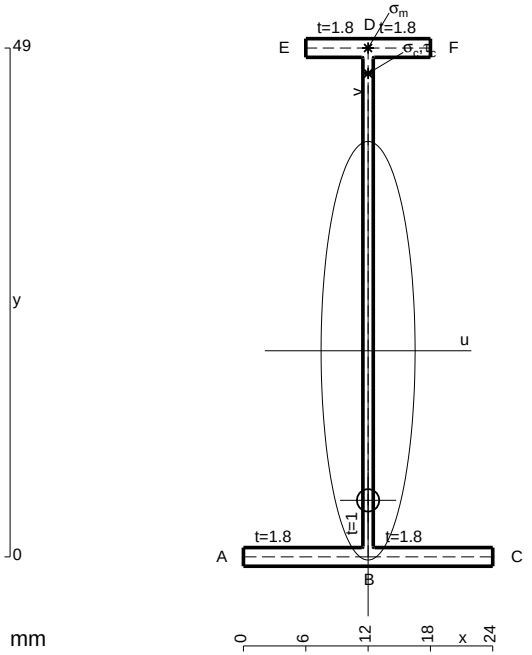

A = 113.8 mm^2
J_u = 46239. mm^4
J_v = 2333. mm^4
J_t = 86.32 mm^4
y_o = -14.41 mm
y_g = 19.85 mm
N = -715. N
T_y = 1430. N
M_x = -357500. Nmm
x_m = 12. mm
y_m = 49. mm
v_m = 29.15 mm
$\sigma_m = N/A - Mv/J_u$ = 219.1 N/mm^2
y_c = 2. mm
u_c = -12. mm
v_c = -17.85 mm
$\sigma_c = N/A - Mv/J_u$ = 219.1 N/mm^2
$\tau_c = TS^*/tJ_u$ = 19.47 N/mm^2
$\tau_g = TS^*/tJ_u$ = 19.47 N/mm^2
t_c = 1430. mm
$\sigma_o = \sqrt{\sigma^2 + 3\tau^2}$ = 221.7 N/mm^2

@ Adolfo Zavelani Rossi, Politecnico di Milano, vers.27.03.13 01.12.25

ESΣ05.xxxx.052

@ Adolfo Zavelani Rossi, Politecnico di Milano, vers.27.03.13 01.12.25

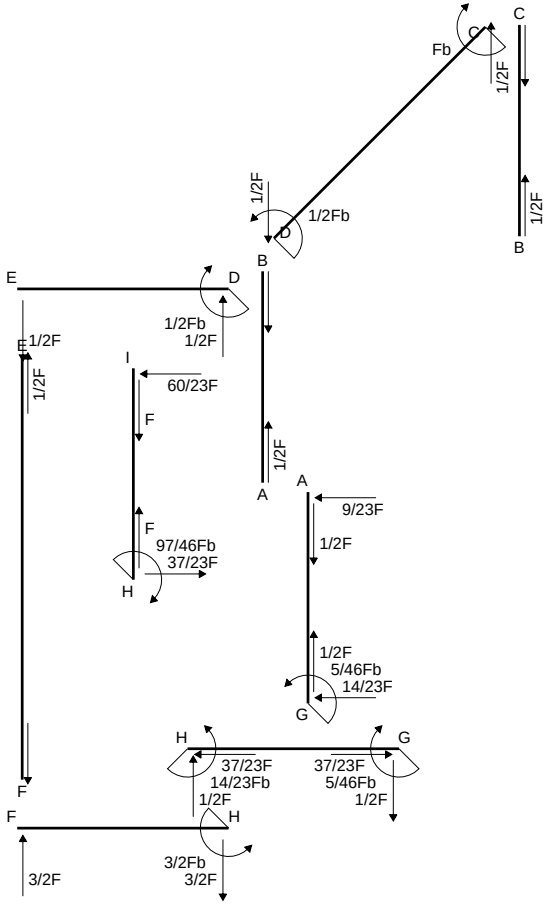
C
Fb
C
1/2F
1/2F
1/2Fb
D
1/2F
B
E
D
B
1/2Fb
1/2F
1/2F
I
60/23F
F
1/2F
A
A
9/23F
F
97/46Fb
37/23F
H
1/2F
5/46Fb
14/23F
G
H
G
37/23F
14/23Fb
1/2F
37/23F
5/46Fb
1/2F
F
H
F
3/2Fb
3/2F
3/2F

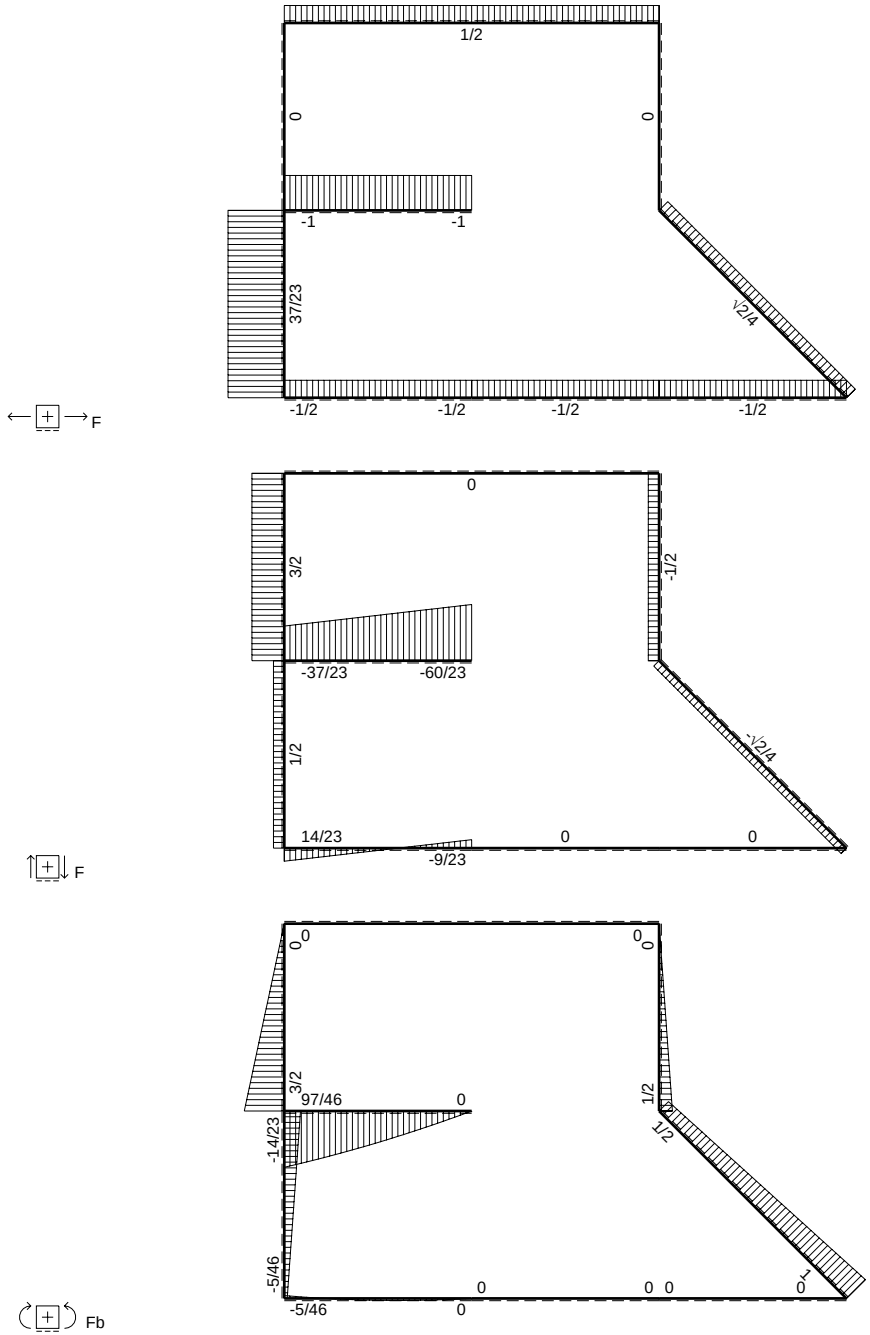
F
1/2
0
0
-1
-1
37/23
√2/4
-1/2
-1/2
-1/2
-1/2
F
0
3/2
-1/2
-37/23
-60/23
1/2
-√2/4
14/23
0
0
-9/23
Fb
0
0
0
0
3/2
97/46
0
1/2
-14/23
1/2
-5/46
0
0
0
0
-5/46
0

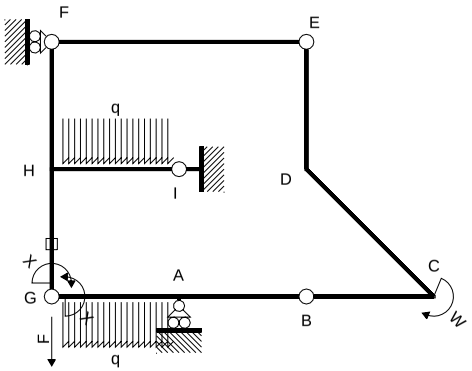

Schema di calcolo iperstatico

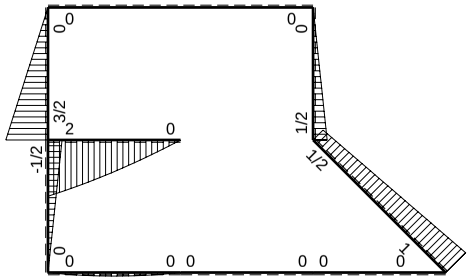

M_0 flessione da carichi assegnati

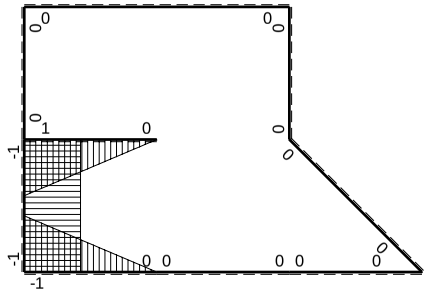

M_x flessione da iperstatica X=1

PROCEDIMENTO E RISULTATI 238485 ESΣ05.xxxx.053

@ Adolfo Zavelani Rossi, Politecnico di Milano, vers.27.03.13 01.12.25

Quadro contributi PLV per iperstatica $X=W_{GA}$

→	$M_x(x)$	$M_o(x)$	M_xM_o	M_xM_x	$\int M_xM_o/EJdx$	$\int XM_xM_x/EJdx$
AB b	0	0	0	0	0	0
BA b	0	0	0	0		
BC b	0	0	0	0	0	0
CB b	0	0	0	0		
CD $\sqrt{2}b$	0	$Fb-\sqrt{2}/4Fx$	0	0	0	0
DE b	0	1/2Fb-1/2Fx	0	0	0	0
ED b	0	-1/2Fx	0	0		
EF 2b	0	0	0	0	0	0
FE 2b	0	0	0	0		
GA b	$-1+x/b$	$1/2Fx-1/2qx^2$	$-1/2Fx+Fx^2/b-1/2qx^3/b$	$1-2x/b+x^2/b^2$	$-1/24Fb^2/EJ$	1/3Xb/EJ
AG b	x/b	$-1/2Fx+1/2qx^2$	$-1/2Fx^2/b+1/2qx^3/b$	x^2/b^2		
FH b	0	3/2Fx	0	0	0	0
HF b	0	-3/2Fb+3/2Fx	0	0		
HI b	1-x/b	$2Fb-3/2Fx-1/2qx^2$	$2Fb-7/2Fx+Fx^2/b+1/2qx^3/b$	$1-2x/b+x^2/b^2$	$17/24Fb^2/EJ$	1/3Xb/EJ
IH b	-x/b	$-5/2Fx+1/2qx^2$	$5/2Fx^2/b-1/2qx^3/b$	x^2/b^2		
HG b	-1	-1/2Fb+1/2Fx	1/2Fb-1/2Fx	1	$1/4Fb^2/EJ$	Xb/EJ
GH b	1	1/2Fx	1/2Fx	1		
HG	elongazione asta $N_{1HG}\varepsilon_{HG}L_{HG}$				$-Fb^2/EJ$	
A	molla nodo $-V_{1A}(V_{oA}+XV_{1A})/k_A$				$-1/8Fb^2/EJ$	1/4Xb/EJ
	totali				$-5/24Fb^2/EJ$	23/12Xb/EJ
	iperstatica $X=W_{GA}$				5/46Fb	

PROCEDIMENTO E RISULTATI 238485 ESΣ05.xxxx.053

Sviluppi di calcolo iperstatica

@ Adolfo Zavelani Rossi, Politecnico di Milano, vers.27.03.13 01.12.25

$L^{XX}_{GA} = \int_o^b (1 - 2\,x/b + x^2/b^2)\ 1/EJ\ dx = [\,x - x^2/b + 1/3\,x^3/b^2\,]_o^b\ 1/EJ$

$= (\,b - b + 1/3\,b\,)\ 1/EJ = 1/3\ b/EJ$

$L^{XX}_{AG} = \int_o^b (\,x^2/b^2\,)\ 1/EJ\ dx = [1/3\,x^3/b^2\,]_o^b\ 1/EJ$

$= (1/3\,b\,)\ 1/EJ = 1/3\ b/EJ$

$L^{XX}_{HI} = \int_o^b (1 - 2\,x/b + x^2/b^2)\ 1/EJ\ dx = [\,x - x^2/b + 1/3\,x^3/b^2\,]_o^b\ 1/EJ$

$= (\,b - b + 1/3\,b\,)\ 1/EJ = 1/3\ b/EJ$

$L^{XX}_{IH} = \int_o^b (\,x^2/b^2\,)\ 1/EJ\ dx = [1/3\,x^3/b^2\,]_o^b\ 1/EJ$

$= (1/3\,b\,)\ 1/EJ = 1/3\ b/EJ$

$L^{XX}_{HG} = \int_o^b (1)\ 1/EJ\ dx = [\,x\,]_o^b\ 1/EJ$

$= (\,b\,)\ 1/EJ = b/EJ$

$L^{XX}_{GH} = \int_o^b (1)\ 1/EJ\ dx = [\,x\,]_o^b\ 1/EJ$

$= (\,b\,)\ 1/EJ = b/EJ$

$L^{Xo}_{GA} = \int_o^b (-1/2\,x/b + x^2/b^2 - 1/2\,x^3/b^3)\ Fb\ 1/EJ\ dx = [-1/4\,x^2/b + 1/3\,x^3/b^2 - 1/8\,x^4/b^3\,]_o^b\ Fb\ 1/EJ$

$= (-1/4\,b + 1/3\,b - 1/8\,b)\ Fb\ 1/EJ = -1/24\ Fb^2/EJ$

$L^{Xo}_{AG} = \int_o^b (-1/2\,x^2/b^2 + 1/2\,x^3/b^3)\ Fb\ 1/EJ\ dx = [-1/6\,x^3/b^2 + 1/8\,x^4/b^3\,]_o^b\ Fb\ 1/EJ$

$= (-1/6\,b + 1/8\,b)\ Fb\ 1/EJ = -1/24\ Fb^2/EJ$

$L^{Xo}_{HI} = \int_o^b (2 - 7/2\,x/b + x^2/b^2 + 1/2\,x^3/b^3)\ Fb\ 1/EJ\ dx = [2\,x - 7/4\,x^2/b + 1/3\,x^3/b^2 + 1/8\,x^4/b^3\,]_o^b\ Fb\ 1/EJ$

$= (2\,b - 7/4\,b + 1/3\,b + 1/8\,b)\ Fb\ 1/EJ = 17/24\ Fb^2/EJ$

$L^{Xo}_{IH} = \int_o^b (5/2\,x^2/b^2 - 1/2\,x^3/b^3)\ Fb\ 1/EJ\ dx = [5/6\,x^3/b^2 - 1/8\,x^4/b^3\,]_o^b\ Fb\ 1/EJ$

$= (5/6\,b - 1/8\,b)\ Fb\ 1/EJ = 17/24\ Fb^2/EJ$

$L^{Xo}_{HG} = \int_o^b (1/2 - 1/2\,x/b)\ Fb\ 1/EJ\ dx - 1\ \ (-1)\ \ (-1)\ \ Fb^2/EJ$

$= [1/2\,x - 1/4\,x^2/b\,]_o^b\ Fb\ 1/EJ\ - 1\ \ (-1)\ \ (-1)\ \ Fb^2/EJ$

$= (1/2\,b - 1/4\,b)\ Fb\ 1/EJ\ - 1\ \ (-1)\ \ (-1)\ \ Fb^2/EJ = -3/4\ \ Fb^2/EJ$

$L^{Xo}_{GH} = \int_o^b (1/2\,x/b)\ Fb\ 1/EJ\ dx - 1\ \ (-1)\ \ (-1)\ \ Fb^2/EJ = [1/4\,x^2/b\,]_o^b\ Fb\ 1/EJ\ - 1\ \ (-1)\ \ (-1)\ \ Fb^2/EJ$

$= (1/4\,b)\ Fb\ 1/EJ\ - 1\ \ (-1)\ \ (-1)\ \ Fb^2/EJ = -3/4\ \ Fb^2/EJ$

PROCEDIMENTO E RISULTATI 238485 ESΣ05.xxxx.053

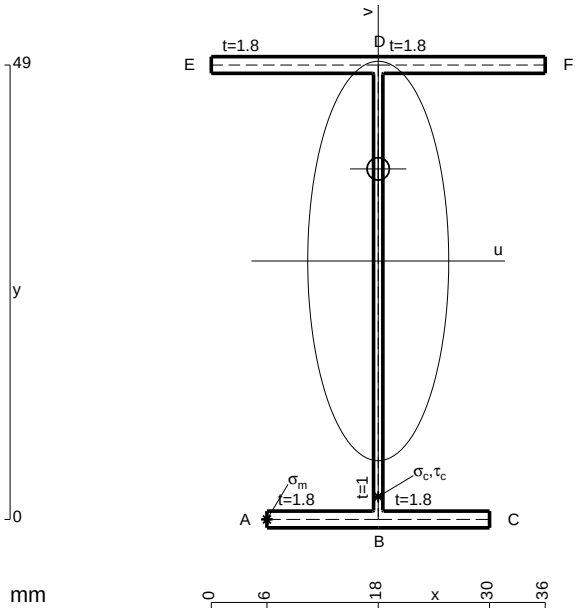

A = 157. mm^2
J_u = 72847. mm^4
J_v = 9072. mm^4
J_t = 133. mm^4
y_o = 9.929 mm
y_g = 27.87 mm
T_y = 1110. N
M_x = 599400. Nmm
x_m = 6. mm
u_m = -12. mm
v_m = -27.87 mm
$\sigma_m = -Mv/J_u$ = 229.3 N/mm^2
x_c = 18. mm
v_c = -27.87 mm
$\sigma_c = -Mv/J_u$ = 229.3 N/mm^2
$\tau_c = TS^*/tJ_u$ = 18.35 N/mm^2
$\tau_g = TS^*/tJ_u$ = 18.35 N/mm^2
t_c = 740. mm
$\sigma_o = \sqrt{\sigma^2 + 3\tau^2}$ = 231.5 N/mm^2

@ Adolfo Zavelani Rossi, Politecnico di Milano, vers.27.03.13 01.12.25

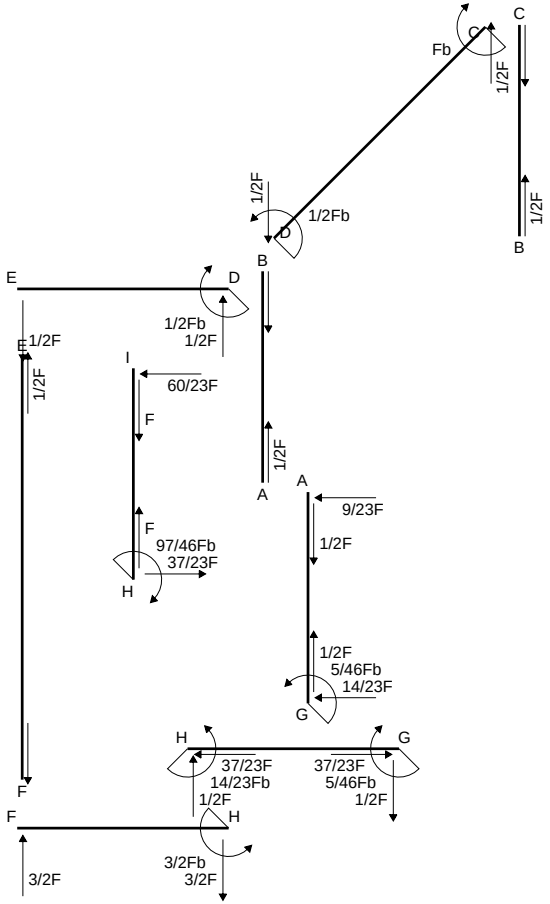
C
Fb
C
1/2F
1/2F
1/2F
1/2Fb
D
B
B
E
D
1/2Fb
1/2F
1/2F
1/2F
I
60/23F
F
1/2F
A
A
9/23F
F
97/46Fb
37/23F
H
1/2F
5/46Fb
14/23F
G
H
G
37/23F
14/23Fb
1/2F
37/23F
5/46Fb
1/2F
F
H
F
3/2Fb
3/2F
3/2F

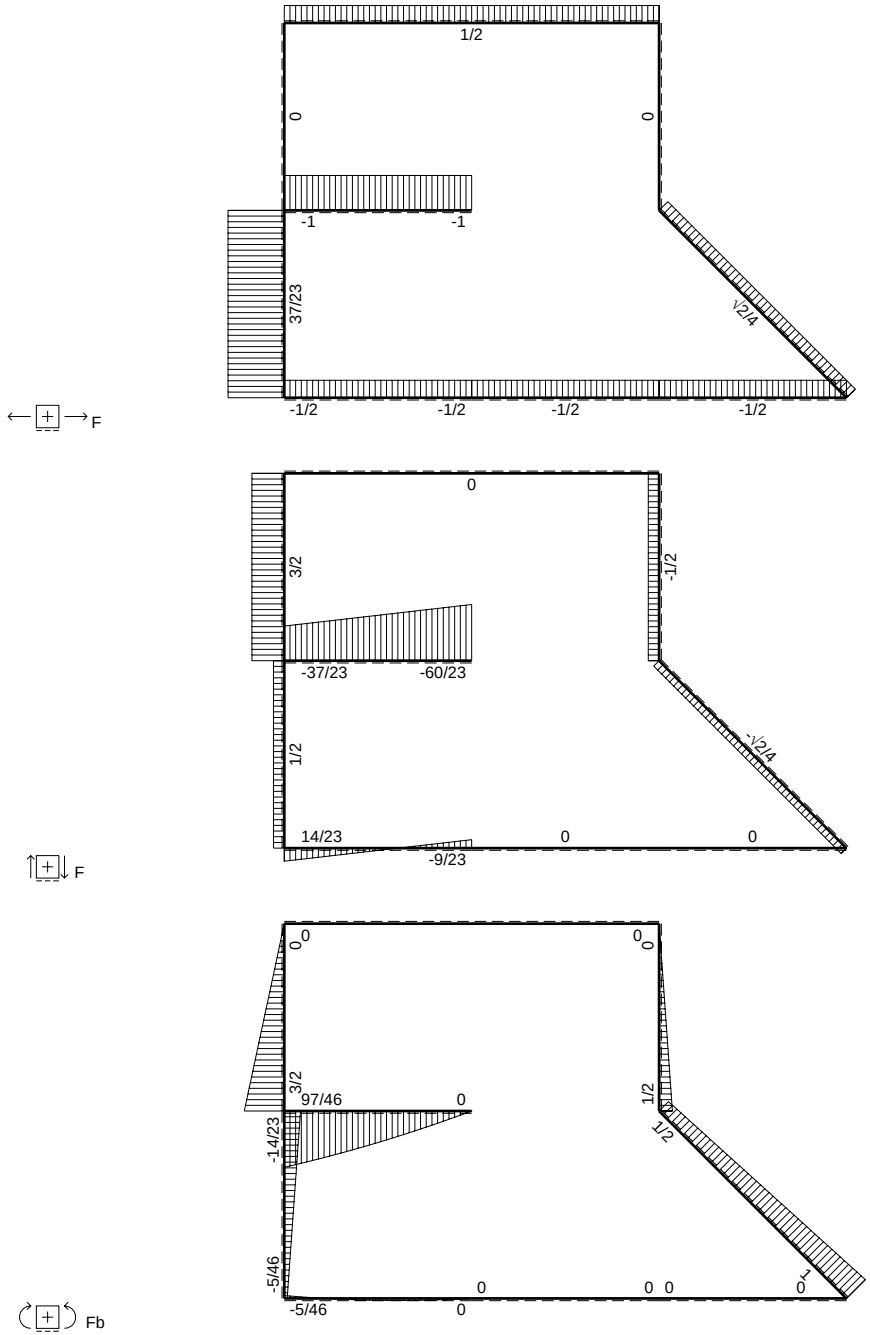
F
1/2
0
0
-1
-1
37/23
√2/4
-1/2
-1/2
-1/2
-1/2
F
0
3/2
-1/2
-37/23
-60/23
1/2
-√2/4
14/23
0
0
-9/23
Fb
0
0
0
0
3/2
97/46
0
1/2
-14/23
1/2
-5/46
0
0
0
0
-5/46
0

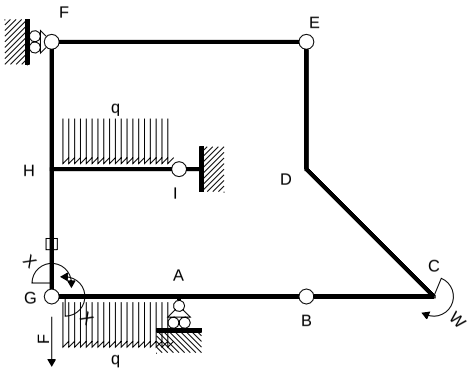

Schema di calcolo iperstatico

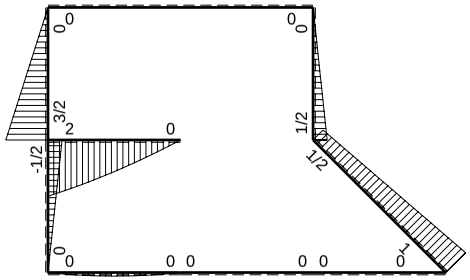

M_0 flessione da carichi assegnati

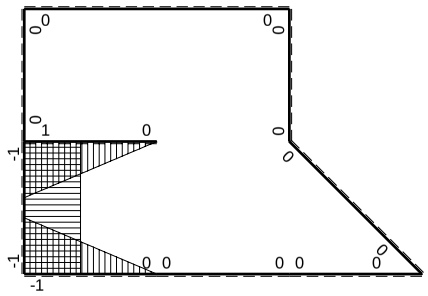

M_x flessione da iperstatica X=1

PROCEDIMENTO E RISULTATI 214395 ESΣ05.xxxx.054

@ Adolfo Zavelani Rossi, Politecnico di Milano, vers.27.03.13 01.12.25

Quadro contributi PLV per iperstatica $X=W_{GA}$

→	$M_x(x)$	$M_o(x)$	M_xM_o	M_xM_x	$\int M_xM_o/EJdx$	$\int XM_xM_x/EJdx$
AB b	0	0	0	0	0	0
BA b	0	0	0	0		
BC b	0	0	0	0	0	0
CB b	0	0	0	0		
CD $\sqrt{2}b$	0	$Fb-\sqrt{2}/4Fx$	0	0	0	0
DE b	0	$1/2Fb-1/2Fx$	0	0	0	0
ED b	0	$-1/2Fx$	0	0		
EF 2b	0	0	0	0	0	0
FE 2b	0	0	0	0		
GA b	$-1+x/b$	$1/2Fx-1/2qx^2$	$-1/2Fx+Fx^2/b-1/2qx^3/b$	$1-2x/b+x^2/b^2$	$-1/24Fb^2/EJ$	$1/3Xb/EJ$
AG b	x/b	$-1/2Fx+1/2qx^2$	$-1/2Fx^2/b+1/2qx^3/b$	x^2/b^2		
FH b	0	$3/2Fx$	0	0	0	0
HF b	0	$-3/2Fb+3/2Fx$	0	0		
HI b	$1-x/b$	$2Fb-3/2Fx-1/2qx^2$	$2Fb-7/2Fx+Fx^2/b+1/2qx^3/b$	$1-2x/b+x^2/b^2$	$17/24Fb^2/EJ$	$1/3Xb/EJ$
IH b	$-x/b$	$-5/2Fx+1/2qx^2$	$5/2Fx^2/b-1/2qx^3/b$	x^2/b^2		
HG b	-1	$-1/2Fb+1/2Fx$	$1/2Fb-1/2Fx$	1	$1/4Fb^2/EJ$	Xb/EJ
GH b	1	$1/2Fx$	$1/2Fx$	1		
HG	elongazione asta $N_{1HG}\varepsilon_{HG}L_{HG}$				$-Fb^2/EJ$	
A	molla nodo $-V_{1A}(V_{oA}+XV_{1A})/k_A$				$-1/8Fb^2/EJ$	$1/4Xb/EJ$
	totali				$-5/24Fb^2/EJ$	$23/12Xb/EJ$
	iperstatica $X=W_{GA}$				$5/46Fb$	

PROCEDIMENTO E RISULTATI 214395 ESΣ05.xxxx.054

Sviluppi di calcolo iperstatica

@ Adolfo Zavelani Rossi, Politecnico di Milano, vers.27.03.13 01.12.25

$L^{XX}_{GA} = \int_o^b (1 - 2\,x/b + x^2/b^2)\ 1/EJ\ dx = [\,x - x^2/b + 1/3\,x^3/b^2\,]_o^b\ 1/EJ$

$= (\,b - b + 1/3\,b\,)\ 1/EJ\ = 1/3\ b/EJ$

$L^{XX}_{AG} = \int_o^b (\,x^2/b^2\,)\ 1/EJ\ dx = [1/3\,x^3/b^2\,]_o^b\ 1/EJ$

$= (1/3\,b\,)\ 1/EJ\ = 1/3\ b/EJ$

$L^{XX}_{HI} = \int_o^b (1 - 2\,x/b + x^2/b^2)\ 1/EJ\ dx = [\,x - x^2/b + 1/3\,x^3/b^2\,]_o^b\ 1/EJ$

$= (\,b - b + 1/3\,b\,)\ 1/EJ\ = 1/3\ b/EJ$

$L^{XX}_{IH} = \int_o^b (\,x^2/b^2\,)\ 1/EJ\ dx = [1/3\,x^3/b^2\,]_o^b\ 1/EJ$

$= (1/3\,b\,)\ 1/EJ\ = 1/3\ b/EJ$

$L^{XX}_{HG} = \int_o^b (1)\ 1/EJ\ dx = [\,x\,]_o^b\ 1/EJ$

$= (\,b\,)\ 1/EJ\ = b/EJ$

$L^{XX}_{GH} = \int_o^b (1)\ 1/EJ\ dx = [\,x\,]_o^b\ 1/EJ$

$= (\,b\,)\ 1/EJ\ = b/EJ$

$L^{Xo}_{GA} = \int_o^b (-1/2\,x/b + x^2/b^2 - 1/2\,x^3/b^3)\ Fb\ 1/EJ\ dx = [-1/4\,x^2/b + 1/3\,x^3/b^2 - 1/8\,x^4/b^3\,]_o^b\ Fb\ 1/EJ$

$= (-1/4\,b + 1/3\,b - 1/8\,b\,)\ Fb\ 1/EJ\ = -1/24\ Fb^2/EJ$

$L^{Xo}_{AG} = \int_o^b (-1/2\,x^2/b^2 + 1/2\,x^3/b^3)\ Fb\ 1/EJ\ dx = [-1/6\,x^3/b^2 + 1/8\,x^4/b^3\,]_o^b\ Fb\ 1/EJ$

$= (-1/6\,b + 1/8\,b\,)\ Fb\ 1/EJ\ = -1/24\ Fb^2/EJ$

$L^{Xo}_{HI} = \int_o^b (2 - 7/2\,x/b + x^2/b^2 + 1/2\,x^3/b^3)\ Fb\ 1/EJ\ dx = [2\,x - 7/4\,x^2/b + 1/3\,x^3/b^2 + 1/8\,x^4/b^3\,]_o^b\ Fb\ 1/EJ$

$= (2\,b - 7/4\,b + 1/3\,b + 1/8\,b\,)\ Fb\ 1/EJ\ = 17/24\ Fb^2/EJ$

$L^{Xo}_{IH} = \int_o^b (5/2\,x^2/b^2 - 1/2\,x^3/b^3)\ Fb\ 1/EJ\ dx = [5/6\,x^3/b^2 - 1/8\,x^4/b^3\,]_o^b\ Fb\ 1/EJ$

$= (5/6\,b - 1/8\,b\,)\ Fb\ 1/EJ\ = 17/24\ Fb^2/EJ$

$L^{Xo}_{HG} = \int_o^b (1/2 - 1/2\,x/b\,)\ Fb\ 1/EJ\ dx - 1\ \ (-1)\ \ (-1)\ \ Fb^2/EJ$

$= [1/2\,x - 1/4\,x^2/b\,]_o^b\ Fb\ 1/EJ\ - 1\ \ (-1)\ \ (-1)\ \ Fb^2/EJ$

$= (1/2\,b - 1/4\,b\,)\ Fb\ 1/EJ\ - 1\ \ (-1)\ \ (-1)\ \ Fb^2/EJ = -3/4\ \ Fb^2/EJ$

$L^{Xo}_{GH} = \int_o^b (1/2\,x/b\,)\ Fb\ 1/EJ\ dx - 1\ \ (-1)\ \ (-1)\ \ Fb^2/EJ = [1/4\,x^2/b\,]_o^b\ Fb\ 1/EJ\ - 1\ \ (-1)\ \ (-1)\ \ Fb^2/EJ$

$= (1/4\,b\,)\ Fb\ 1/EJ\ - 1\ \ (-1)\ \ (-1)\ \ Fb^2/EJ = -3/4\ \ Fb^2/EJ$

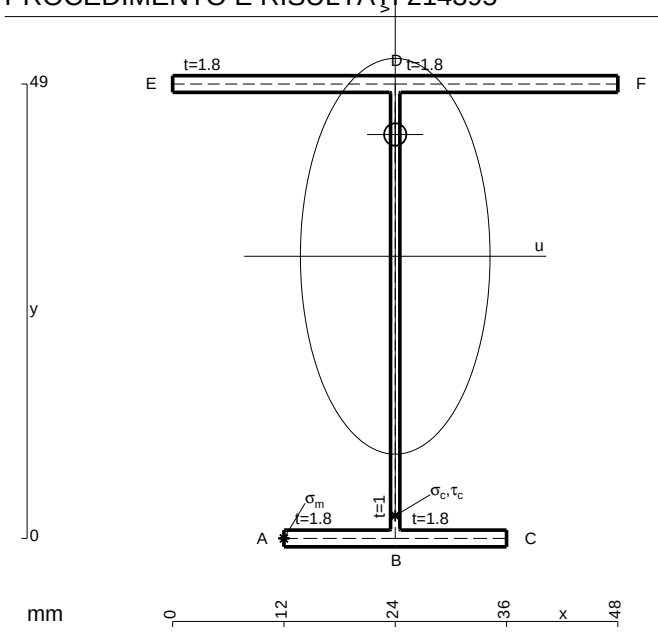

A = 178.6 mm^2
J_u = 81324. mm^4
J_v = 18662. mm^4
J_t = 156.3 mm^4
y_o = 13.13 mm
y_g = 30.43 mm
T_y = 1095. N
M_x = 635100. Nmm
x_m = 12. mm
u_m = -12. mm
v_m = -30.43 mm
$\sigma_m = -Mv/J_u$ = 237.6 N/mm^2
x_c = 24. mm
v_c = -30.43 mm
$\sigma_c = -Mv/J_u$ = 237.6 N/mm^2
$\tau_c = TS^*/tJ_u$ = 17.7 N/mm^2
$\tau_g = TS^*/tJ_u$ = 17.7 N/mm^2
t_c = 730. mm
$\sigma_o = \sqrt{\sigma^2 + 3\tau^2}$ = 239.6 N/mm^2

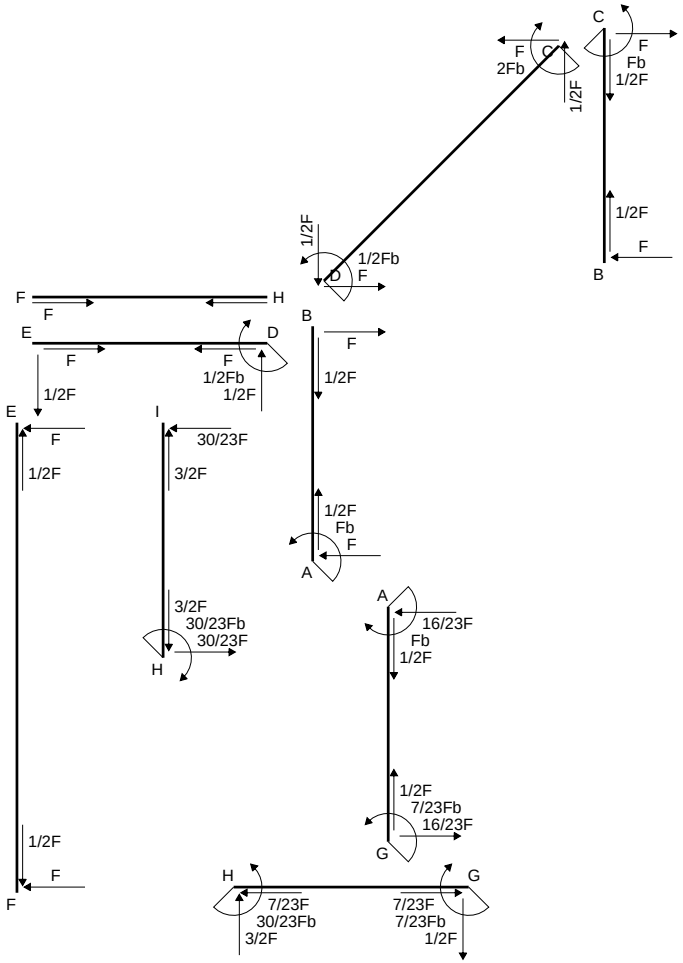
C
F
Fb
1/2F
F
2Fb
C
1/2F
1/2F
F
B
1/2F
1/2Fb
F
D
F
H
F
E
D
F
F
1/2Fb
1/2F
1/2F
B
F
1/2F
E
F
1/2F
I
30/23F
3/2F
1/2F
Fb
F
A
3/2F
30/23Fb
30/23F
H
A
16/23F
Fb
1/2F
1/2F
7/23Fb
16/23F
G
1/2F
F
F
H
7/23F
30/23Fb
3/2F
7/23F
7/23Fb
1/2F
G

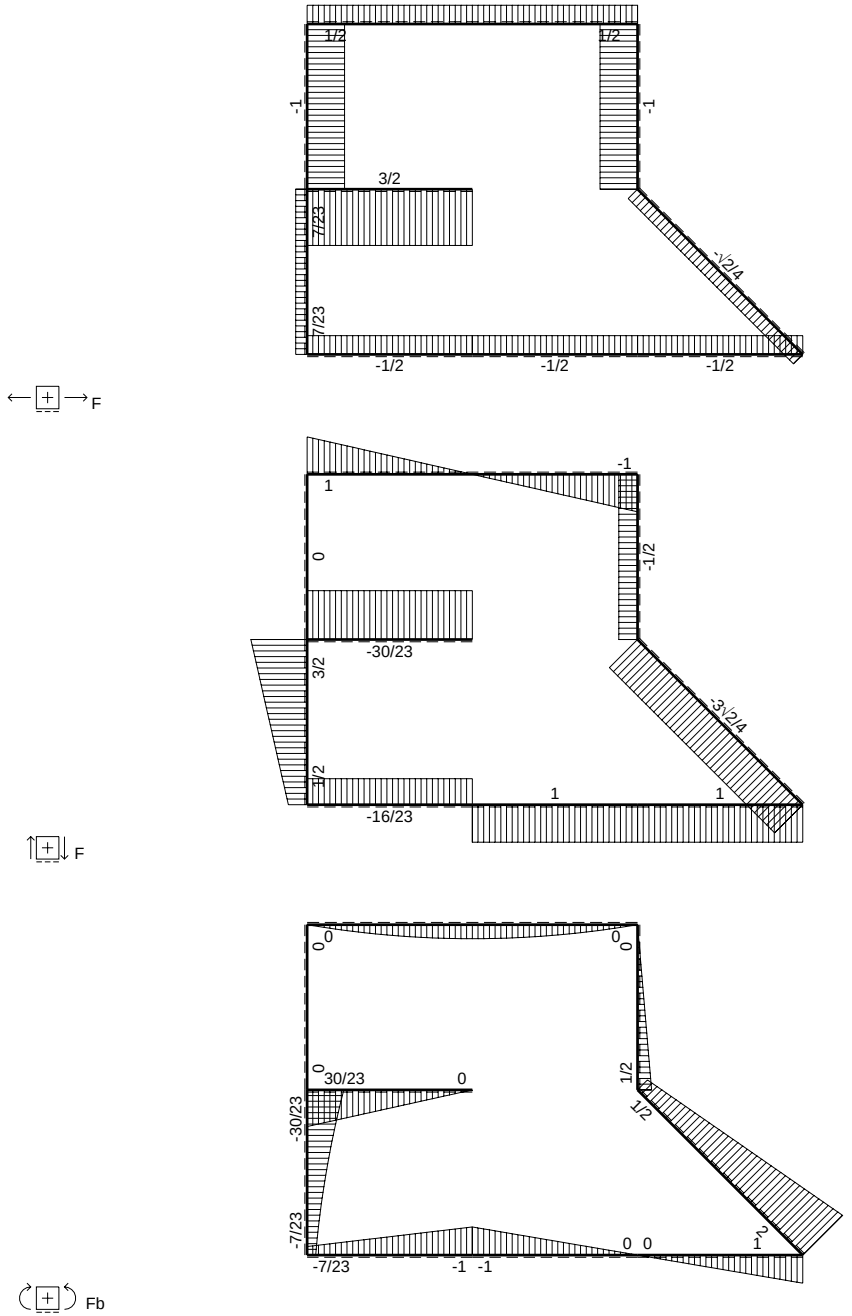
F
1/2
1/2
-1
-1
3/2
7/23
-1/2√2/4
7/23
-1/2
-1/2
-1/2
F
-1
1
0
-1/2
-30/23
3/2
-3√2/4
7/2
1
1
-16/23
F
0
0
0
0
30/23
0
1/2
1/2
-30/23
-7/23
0 0
2
1
-7/23
-1 -1
Fb

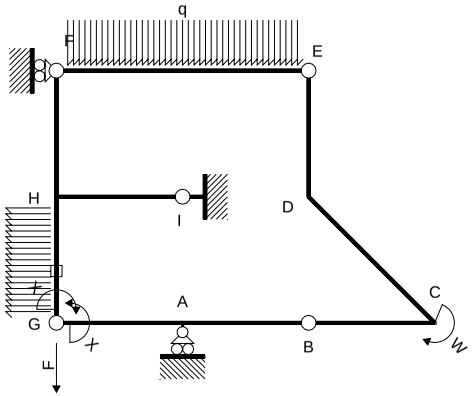

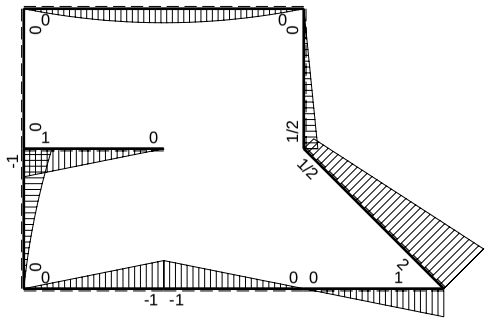

M_0 flessione da carichi assegnati

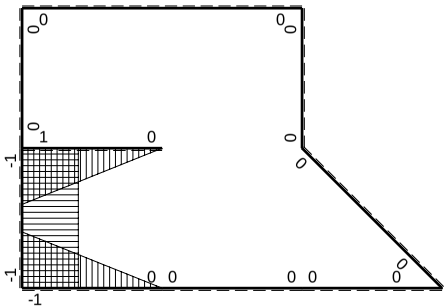

M_x flessione da iperstatica X=1

Quadro contributi PLV per iperstatica $X=W_{GA}$

→	$M_x(x)$	$M_o(x)$	M_xM_o	M_xM_x	$\int M_xM_o/EJdx$	$\int XM_xM_x/EJdx$
AB b	0	-Fb+Fx	0	0	0	0
BA b	0	Fx	0	0		
BC b	0	Fx	0	0	0	0
CB b	0	-Fb+Fx	0	0		
CD √2b	0	2Fb-3√2/4Fx	0	0	0	0
DE b	0	1/2Fb-1/2Fx	0	0	0	0
ED b	0	-1/2Fx	0	0		
EF 2b	0	$-Fx+1/2qx^2$	0	0	0	0
FE 2b	0	$Fx-1/2qx^2$	0	0		
GA b	-1+x/b	-Fx	$Fx-Fx^2/b$	$1-2x/b+x^2/b^2$	$1/6Fb^2/EJ$	1/3Xb/EJ
AG b	x/b	Fb-Fx	$Fx-Fx^2/b$	x^2/b^2		
FH b	0	0	0	0	0	0
HF b	0	0	0	0		
HI b	1-x/b	Fb-Fx	$Fb-2Fx+Fx^2/b$	$1-2x/b+x^2/b^2$	$1/3Fb^2/EJ$	1/3Xb/EJ
IH b	-x/b	-Fx	Fx^2/b	x^2/b^2		
HG b	-1	$-Fb+3/2Fx-1/2qx^2$	$Fb-3/2Fx+1/2Fx^2/b$	1	$5/12Fb^2/EJ$	Xb/EJ
GH b	1	$1/2Fx+1/2qx^2$	$1/2Fx+1/2Fx^2/b$	1		
HG	elongazione asta $N_{1HG}\varepsilon_{HG}L_{HG}$				$-Fb^2/EJ$	
A	molla nodo $-V_{1A}(V_{0A}+XV_{1A})/k_A$				$-1/2Fb^2/EJ$	1/4Xb/EJ
	totali				$-7/12Fb^2/EJ$	23/12Xb/EJ
	iperstatica $X=W_{GA}$				7/23Fb	

Sviluppi di calcolo iperstatica

$L^{XX}_{GA} = \int_o^b (1 - 2\,x/b + x^2/b^2)\ 1/EJ\ dx = [\ x - x^2/b + 1/3\ x^3/b^2\ ]_o^b\ 1/EJ$

$= (\ b - b + 1/3\ b\ )\ 1/EJ\ = 1/3\ b/EJ$

$L^{XX}_{AG} = \int_o^b (\ x^2/b^2\ )\ 1/EJ\ dx = [1/3\ x^3/b^2\ ]_o^b\ 1/EJ$

$= (1/3\ b\ )\ 1/EJ\ = 1/3\ b/EJ$

$L^{XX}_{HI} = \int_o^b (1 - 2\,x/b + x^2/b^2)\ 1/EJ\ dx = [\ x - x^2/b + 1/3\ x^3/b^2\ ]_o^b\ 1/EJ$

$= (\ b - b + 1/3\ b\ )\ 1/EJ\ = 1/3\ b/EJ$

$L^{XX}_{IH} = \int_o^b (\ x^2/b^2\ )\ 1/EJ\ dx = [1/3\ x^3/b^2\ ]_o^b\ 1/EJ$

$= (1/3\ b\ )\ 1/EJ\ = 1/3\ b/EJ$

$L^{XX}_{HG} = \int_o^b (1)\ 1/EJ\ dx = [\ x\ ]_o^b\ 1/EJ$

$= (\ b\ )\ 1/EJ\ =\ b/EJ$

$L^{XX}_{GH} = \int_o^b (1)\ 1/EJ\ dx = [\ x\ ]_o^b\ 1/EJ$

$= (\ b\ )\ 1/EJ\ =\ b/EJ$

$L^{Xo}_{GA} = \int_o^b (\ x/b - x^2/b^2\ )\ Fb\ 1/EJ\ dx = [1/2\ x^2/b - 1/3\ x^3/b^2\ ]_o^b\ Fb\ 1/EJ$

$= (1/2\ b - 1/3\ b\ )\ Fb\ 1/EJ\ = 1/6\ \ Fb^2/EJ$

$L^{Xo}_{AG} = \int_o^b (\ x/b - x^2/b^2\ )\ Fb\ 1/EJ\ dx = [1/2\ x^2/b - 1/3\ x^3/b^2\ ]_o^b\ Fb\ 1/EJ$

$= (1/2\ b - 1/3\ b\ )\ Fb\ 1/EJ\ = 1/6\ \ Fb^2/EJ$

$L^{Xo}_{HI} = \int_o^b (1 - 2\,x/b + x^2/b^2)\ Fb\ 1/EJ\ dx = [\ x - x^2/b + 1/3\ x^3/b^2\ ]_o^b\ Fb\ 1/EJ$

$= (\ b - b + 1/3\ b\ )\ Fb\ 1/EJ\ = 1/3\ \ Fb^2/EJ$

$L^{Xo}_{IH} = \int_o^b (\ x^2/b^2\ )\ Fb\ 1/EJ\ dx = [1/3\ x^3/b^2\ ]_o^b\ Fb\ 1/EJ$

$= (1/3\ b\ )\ Fb\ 1/EJ\ = 1/3\ \ Fb^2/EJ$

$L^{Xo}_{HG} = \int_o^b (1 - 3/2\ x/b + 1/2\ x^2/b^2)\ Fb\ 1/EJ\ dx - 1\ \ (-1)\ \ (-1)\ \ Fb^2/EJ$

$= [\ x - 3/4\ x^2/b + 1/6\ x^3/b^2\ ]_o^b\ Fb\ 1/EJ\ - 1\ \ (-1)\ \ (-1)\ \ Fb^2/EJ$

$= (\ b - 3/4\ b + 1/6\ b\ )\ Fb\ 1/EJ\ - 1\ \ (-1)\ \ (-1)\ \ Fb^2/EJ = -7/12\ \ Fb^2/EJ$

$L^{Xo}_{GH} = \int_o^b (1/2\ x/b + 1/2\ x^2/b^2)\ Fb\ 1/EJ\ dx - 1\ \ (-1)\ \ (-1)\ \ Fb^2/EJ$

$= [1/4\ x^2/b + 1/6\ x^3/b^2\ ]_o^b\ Fb\ 1/EJ\ - 1\ \ (-1)\ \ (-1)\ \ Fb^2/EJ$

$= (1/4\ b + 1/6\ b\ )\ Fb\ 1/EJ\ - 1\ \ (-1)\ \ (-1)\ \ Fb^2/EJ = -7/12\ \ Fb^2/EJ$

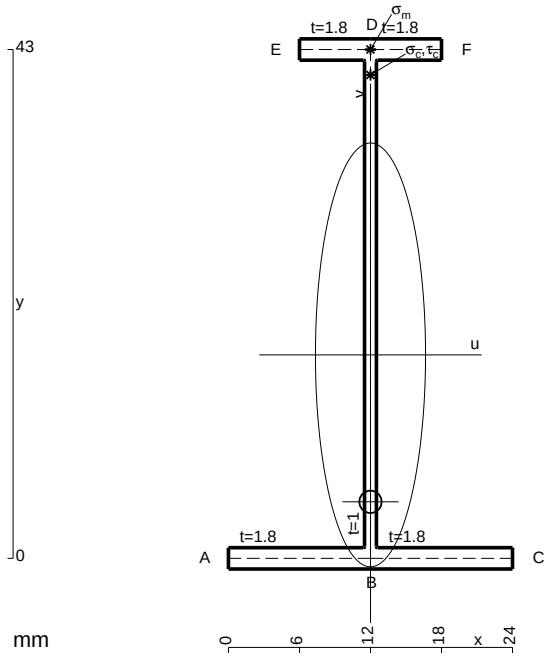

A = 107.8 mm^2
J_u = 34579. mm^4
J_v = 2333. mm^4
J_t = 84.32 mm^4
y_o = -12.41 mm
y_g = 17.19 mm
N = -84.85 N
T_y = -254.6 N
M_x = 264000. Nmm
x_m = 12. mm
y_m = 43. mm
v_m = 25.81 mm
$\sigma_m = N/A - Mv/J_u$ = -197.8 N/mm^2
y_c = 2. mm
u_c = -12. mm
v_c = -15.19 mm
$\sigma_c = N/A - Mv/J_u$ = -197.8 N/mm^2
$\tau_c = TS^*/tJ_u$ = 4.104 N/mm^2
$\tau_g = TS^*/tJ_u$ = 4.104 N/mm^2
t_c = 240. mm
$\sigma_o = \sqrt{\sigma^2 + 3\tau^2}$ = 198. N/mm^2

ESΣ05.xxxx.055

@ Adolfo Zavelani Rossi, Politecnico di Milano, vers.27.03.13 01.12.25

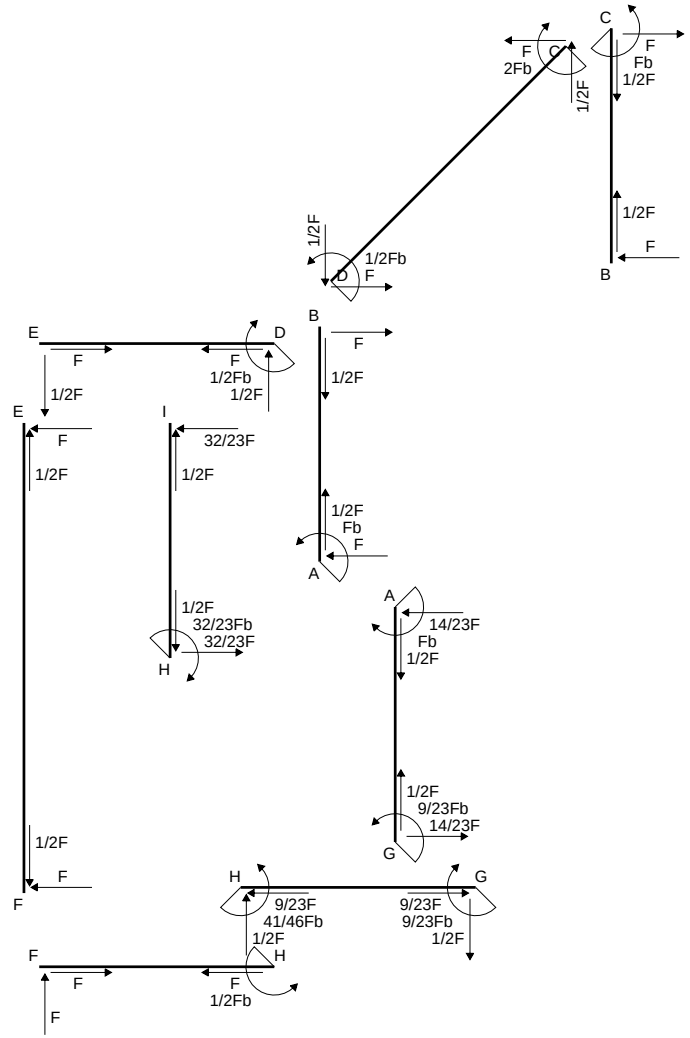
C
F
2Fb
C
1/2F
F
Fb
1/2F
1/2F
F
B
1/2F
1/2Fb
D
F
E
D
F
F
1/2Fb
1/2F
B
F
1/2F
E
F
1/2F
I
32/23F
1/2F
1/2F
Fb
F
A
1/2F
32/23Fb
32/23F
H
A
14/23F
Fb
1/2F
1/2F
9/23Fb
14/23F
G
1/2F
F
F
H
9/23F
41/46Fb
1/2F
G
9/23F
9/23Fb
1/2F
F
F
F
1/2Fb
H
F

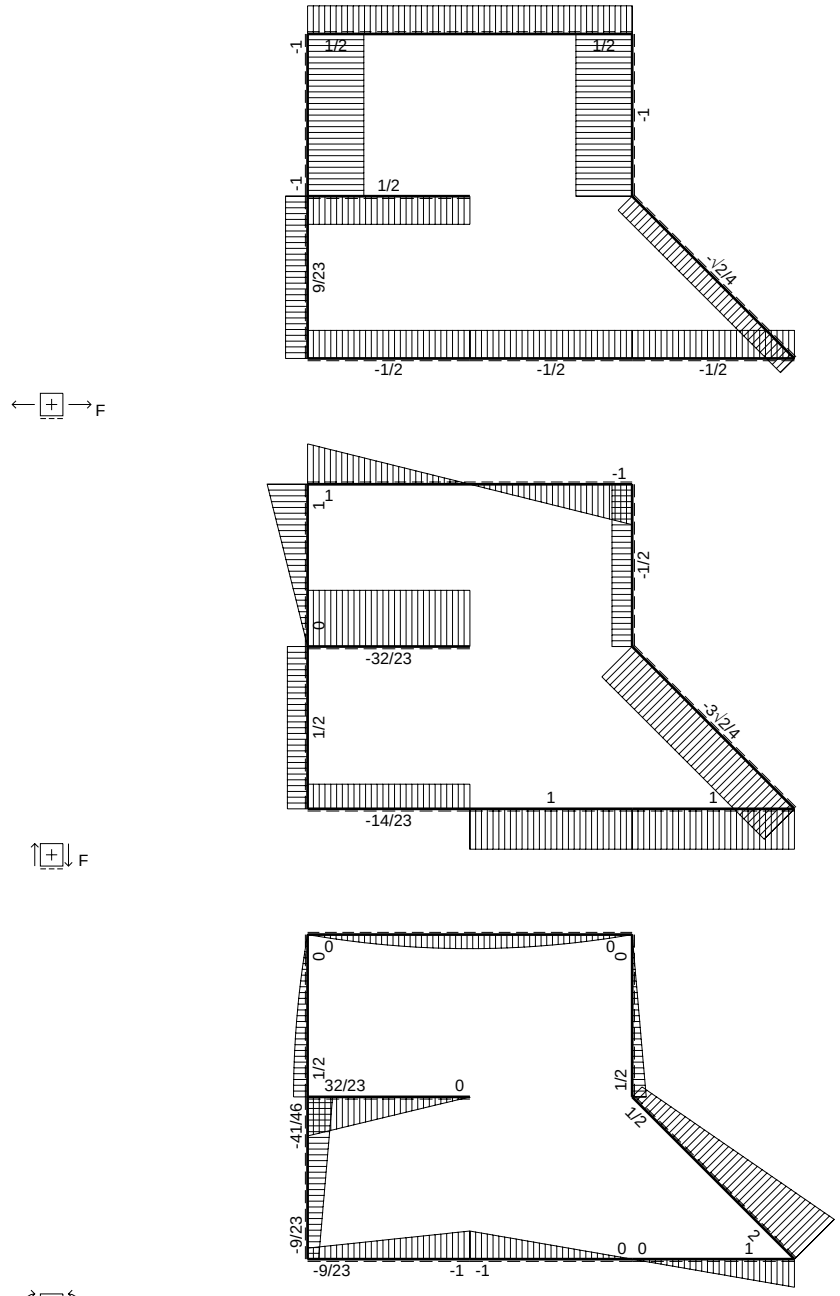
F
-1
1/2
1/2
-1
-1
1/2
9/23
-1/2
-1/2
-1/2
-1/2
F
-1
1
1
-1/2
0
-32/23
1/2
-3/2
-14/23
1
1
F
0
0
0
0
1/2
32/23
0
1/2
1/2
-41/46
-9/23
0 0
1
-9/23
-1 -1
Fb

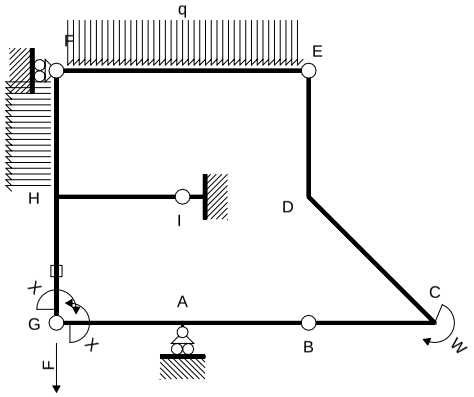

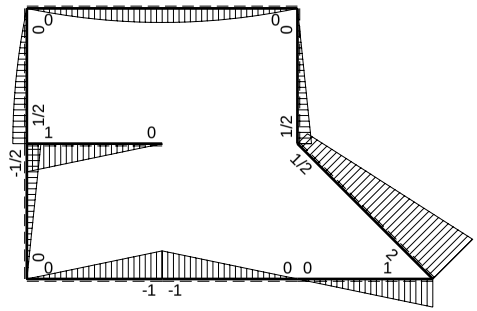

M_0 flessione da carichi assegnati

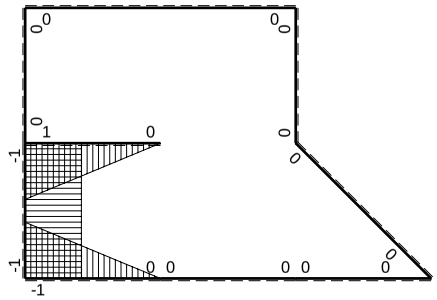

M_x flessione da iperstatica X=1

Quadro contributi PLV per iperstatica $X=W_{GA}$

→	$M_x(x)$	$M_o(x)$	M_xM_o	M_xM_x	$\int M_xM_o/EJdx$	$\int XM_xM_x/EJdx$
AB b	0	-Fb+Fx	0	0	0	0
BA b	0	Fx	0	0		
BC b	0	Fx	0	0	0	0
CB b	0	-Fb+Fx	0	0		
CD √2b	0	2Fb-3√2/4Fx	0	0	0	0
DE b	0	1/2Fb-1/2Fx	0	0	0	0
ED b	0	-1/2Fx	0	0		
EF 2b	0	$-Fx+1/2qx^2$	0	0	0	0
FE 2b	0	$Fx-1/2qx^2$	0	0		
GA b	-1+x/b	-Fx	$Fx-Fx^2/b$	$1-2x/b+x^2/b^2$	$1/6Fb^2/EJ$	1/3Xb/EJ
AG b	x/b	Fb-Fx	$Fx-Fx^2/b$	x^2/b^2		
FH b	0	$Fx-1/2qx^2$	0	0	0	0
HF b	0	$-1/2Fb+1/2qx^2$	0	0		
HI b	1-x/b	Fb-Fx	$Fb-2Fx+Fx^2/b$	$1-2x/b+x^2/b^2$	$1/3Fb^2/EJ$	1/3Xb/EJ
IH b	-x/b	-Fx	Fx^2/b	x^2/b^2		
HG b	-1	-1/2Fb+1/2Fx	1/2Fb-1/2Fx	1	$1/4Fb^2/EJ$	Xb/EJ
GH b	1	1/2Fx	1/2Fx	1		
HG	elongazione asta $N_{1HG}\varepsilon_{HG}L_{HG}$				$-Fb^2/EJ$	
A	molla nodo $-V_{1A}(V_{0A}+XV_{1A})/k_A$				$-1/2Fb^2/EJ$	1/4Xb/EJ
	totali				$-3/4Fb^2/EJ$	$23/12Xb/EJ$
	iperstatica $X=W_{GA}$				9/23Fb	

Sviluppi di calcolo iperstatica

$L^{XX}_{GA} = \int_o^b (1 - 2\,x/b + x^2/b^2)\ 1/EJ\ dx = [\,x - x^2/b + 1/3\ x^3/b^2\,]_o^b\ 1/EJ$

$= (\,b - b + 1/3\ b\,)\ 1/EJ\ = 1/3\ b/EJ$

$L^{XX}_{AG} = \int_o^b (\,x^2/b^2\,)\ 1/EJ\ dx = [1/3\ x^3/b^2\,]_o^b\ 1/EJ$

$= (1/3\ b)\ 1/EJ\ = 1/3\ b/EJ$

$L^{XX}_{HI} = \int_o^b (1 - 2\,x/b + x^2/b^2)\ 1/EJ\ dx = [\,x - x^2/b + 1/3\ x^3/b^2\,]_o^b\ 1/EJ$

$= (\,b - b + 1/3\ b\,)\ 1/EJ\ = 1/3\ b/EJ$

$L^{XX}_{IH} = \int_o^b (\,x^2/b^2\,)\ 1/EJ\ dx = [1/3\ x^3/b^2\,]_o^b\ 1/EJ$

$= (1/3\ b)\ 1/EJ\ = 1/3\ b/EJ$

$L^{XX}_{HG} = \int_o^b (1)\ 1/EJ\ dx = [\,x\,]_o^b\ 1/EJ$

$= (\,b\,)\ 1/EJ\ = b/EJ$

$L^{XX}_{GH} = \int_o^b (1)\ 1/EJ\ dx = [\,x\,]_o^b\ 1/EJ$

$= (\,b\,)\ 1/EJ\ = b/EJ$

$L^{Xo}_{GA} = \int_o^b (\,x/b - x^2/b^2\,)\ Fb\ 1/EJ\ dx = [1/2\ x^2/b - 1/3\ x^3/b^2\,]_o^b\ Fb\ 1/EJ$

$= (1/2\ b - 1/3\ b)\ Fb\ 1/EJ\ = 1/6\ Fb^2/EJ$

$L^{Xo}_{AG} = \int_o^b (\,x/b - x^2/b^2\,)\ Fb\ 1/EJ\ dx = [1/2\ x^2/b - 1/3\ x^3/b^2\,]_o^b\ Fb\ 1/EJ$

$= (1/2\ b - 1/3\ b)\ Fb\ 1/EJ\ = 1/6\ Fb^2/EJ$

$L^{Xo}_{HI} = \int_o^b (1 - 2\,x/b + x^2/b^2)\ Fb\ 1/EJ\ dx = [\,x - x^2/b + 1/3\ x^3/b^2\,]_o^b\ Fb\ 1/EJ$

$= (\,b - b + 1/3\ b\,)\ Fb\ 1/EJ\ = 1/3\ Fb^2/EJ$

$L^{Xo}_{IH} = \int_o^b (\,x^2/b^2\,)\ Fb\ 1/EJ\ dx = [1/3\ x^3/b^2\,]_o^b\ Fb\ 1/EJ$

$= (1/3\ b)\ Fb\ 1/EJ\ = 1/3\ Fb^2/EJ$

$L^{Xo}_{HG} = \int_o^b (1/2 - 1/2\ x/b)\ Fb\ 1/EJ\ dx - 1\ \ (-1)\ \ (-1)\ \ Fb^2/EJ$

$= [1/2\ x - 1/4\ x^2/b\,]_o^b\ Fb\ 1/EJ\ - 1\ \ (-1)\ \ (-1)\ \ Fb^2/EJ$

$= (1/2\ b - 1/4\ b)\ Fb\ 1/EJ\ - 1\ \ (-1)\ \ (-1)\ \ Fb^2/EJ = -3/4\ \ Fb^2/EJ$

$L^{Xo}_{GH} = \int_o^b (1/2\ x/b)\ Fb\ 1/EJ\ dx - 1\ \ (-1)\ \ (-1)\ \ Fb^2/EJ = [1/4\ x^2/b\,]_o^b\ Fb\ 1/EJ\ - 1\ \ (-1)\ \ (-1)\ \ Fb^2/EJ$

$= (1/4\ b)\ Fb\ 1/EJ\ - 1\ \ (-1)\ \ (-1)\ \ Fb^2/EJ = -3/4\ \ Fb^2/EJ$

PROCEDIMENTO E RISULTATI 238123 ESΣ05.xxxx.056

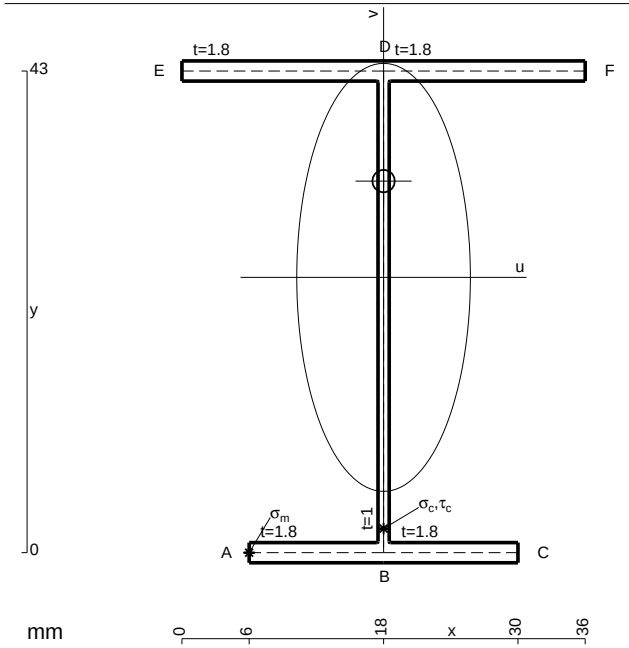

A = 151. mm^2
J_u = 55120. mm^4
J_v = 9072. mm^4
J_t = 131. mm^4
y_o = 8.596 mm
y_g = 24.58 mm
N = -141.4 N
T_y = -424.3 N
M_x = 472000. Nmm
x_m = 6. mm
u_m = -12. mm
v_m = -24.58 mm
$\sigma_m = N/A - Mv/J_u$ = 209.5 N/mm^2
x_c = 18. mm
v_c = -24.58 mm
$\sigma_c = N/A - Mv/J_u$ = 209.5 N/mm^2
$\tau_c = TS^*/tJ_u$ = 8.172 N/mm^2
$\tau_g = TS^*/tJ_u$ = 8.172 N/mm^2
t_c = 400. mm
$\sigma_o = \sqrt{\sigma^2 + 3\tau^2}$ = 210. N/mm^2

@ Adolfo Zavelani Rossi, Politecnico di Milano, vers.27.03.13 01.12.25

ESΣ05.xxxx.056

@ Adolfo Zavelani Rossi, Politecnico di Milano, vers.27.03.13 01.12.25

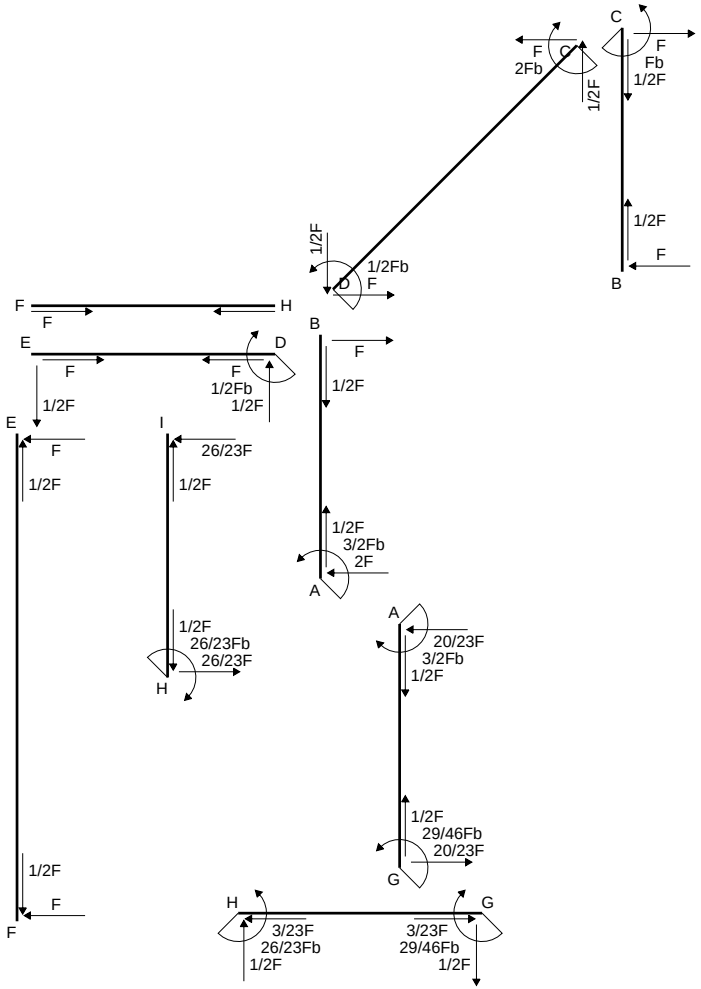
C
F
Fb
1/2F
F
2Fb
G
1/2F
1/2F
F
B
1/2F
1/2Fb
D
F
F
H
F
E
D
B
F
F
1/2Fb
1/2F
F
1/2F
E
I
26/23F
F
1/2F
1/2F
1/2F
3/2Fb
2F
A
1/2F
26/23Fb
26/23F
H
A
20/23F
3/2Fb
1/2F
1/2F
29/46Fb
20/23F
G
1/2F
F
F
H
G
3/23F
26/23Fb
1/2F
3/23F
29/46Fb
1/2F

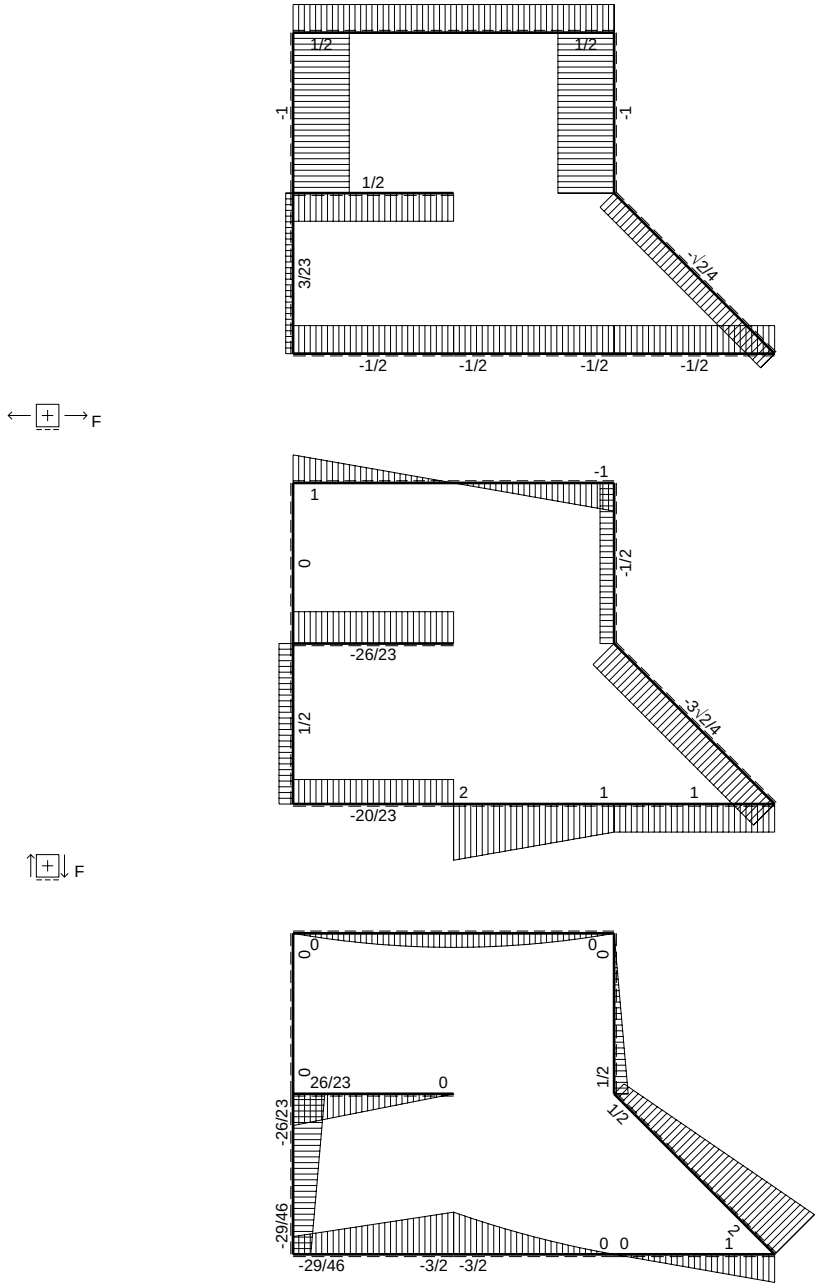
1/2
1/2
-1
-1
1/2
3/23
-1/2
-1/2
-1/2
-1/2
-1/2
F
1
-1
0
-1/2
-26/23
1/2
-3/2
2
1
1
-20/23
F
0
0
0
0
26/23
0
1/2
1/2
-26/23
-29/46
0
0
1
-29/46
-3/2
-3/2
Fb

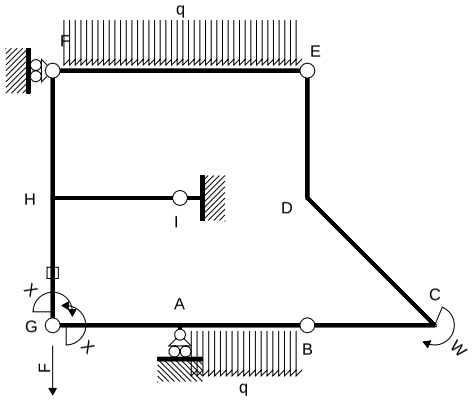

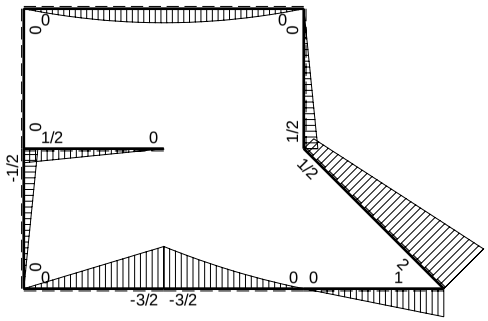

M_0 flessione da carichi assegnati

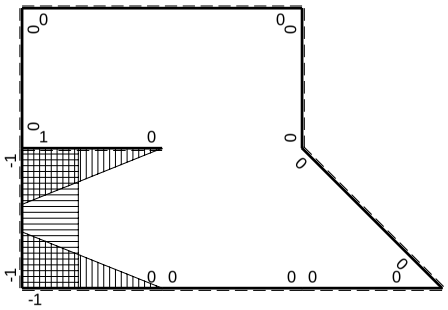

M_x flessione da iperstatica X=1

Quadro contributi PLV per iperstatica $X=W_{GA}$

→	$M_x(x)$	$M_0(x)$	M_xM_0	M_xM_x	$\int M_xM_0/EJdx$	$\int XM_xM_x/EJdx$
AB b	0	$-3/2Fb+2Fx-1/2qx^2$	0	0	0	0
BA b	0	$Fx+1/2qx^2$	0	0		
BC b	0	Fx	0	0	0	0
CB b	0	-Fb+Fx	0	0		
CD √2b	0	2Fb-3√2/4Fx	0	0	0	0
DE b	0	1/2Fb-1/2Fx	0	0	0	0
ED b	0	-1/2Fx	0	0		
EF 2b	0	$-Fx+1/2qx^2$	0	0	0	0
FE 2b	0	$Fx-1/2qx^2$	0	0		
GA b	-1+x/b	-3/2Fx	$3/2Fx-3/2Fx^2/b$	$1-2x/b+x^2/b^2$	$1/4Fb^2/EJ$	1/3Xb/EJ
AG b	x/b	3/2Fb-3/2Fx	$3/2Fx-3/2Fx^2/b$	x^2/b^2		
FH b	0	0	0	0	0	0
HF b	0	0	0	0		
HI b	1-x/b	1/2Fb-1/2Fx	$1/2Fb-Fx+1/2Fx^2/b$	$1-2x/b+x^2/b^2$	$1/6Fb^2/EJ$	1/3Xb/EJ
IH b	-x/b	-1/2Fx	$1/2Fx^2/b$	x^2/b^2		
HG b	-1	-1/2Fb+1/2Fx	1/2Fb-1/2Fx	1	$1/4Fb^2/EJ$	Xb/EJ
GH b	1	1/2Fx	1/2Fx	1		
HG	elongazione asta $N_{1HG}\varepsilon_{HG}L_{HG}$				$-Fb^2/EJ$	
A	molla nodo $-V_{1A}(V_{0A}+XV_{1A})/k_A$				-7/8Fb^2/EJ	1/4Xb/EJ
	totali				$-29/24Fb^2/EJ$	23/12Xb/EJ
	iperstatica $X=W_{GA}$				29/46Fb	

Sviluppi di calcolo iperstatica

$L^{XX}_{GA} = \int_o^b (1 - 2\,x/b + x^2/b^2)\ 1/EJ\ dx = [\,x - x^2/b + 1/3\,x^3/b^2\,]_o^b\ 1/EJ$

$= (\,b - b + 1/3\,b\,)\ 1/EJ = 1/3\ b/EJ$

$L^{XX}_{AG} = \int_o^b (\,x^2/b^2\,)\ 1/EJ\ dx = [1/3\,x^3/b^2\,]_o^b\ 1/EJ$

$= (1/3\,b)\ 1/EJ = 1/3\ b/EJ$

$L^{XX}_{HI} = \int_o^b (1 - 2\,x/b + x^2/b^2)\ 1/EJ\ dx = [\,x - x^2/b + 1/3\,x^3/b^2\,]_o^b\ 1/EJ$

$= (\,b - b + 1/3\,b\,)\ 1/EJ = 1/3\ b/EJ$

$L^{XX}_{IH} = \int_o^b (\,x^2/b^2\,)\ 1/EJ\ dx = [1/3\,x^3/b^2\,]_o^b\ 1/EJ$

$= (1/3\,b)\ 1/EJ = 1/3\ b/EJ$

$L^{XX}_{HG} = \int_o^b (1)\ 1/EJ\ dx = [\,x\,]_o^b\ 1/EJ$

$= (\,b\,)\ 1/EJ = b/EJ$

$L^{XX}_{GH} = \int_o^b (1)\ 1/EJ\ dx = [\,x\,]_o^b\ 1/EJ$

$= (\,b\,)\ 1/EJ = b/EJ$

$L^{Xo}_{GA} = \int_o^b (3/2\,x/b - 3/2\,x^2/b^2)\ Fb\ 1/EJ\ dx = [3/4\,x^2/b - 1/2\,x^3/b^2\,]_o^b\ Fb\ 1/EJ$

$= (3/4\,b - 1/2\,b)\ Fb\ 1/EJ = 1/4\ Fb^2/EJ$

$L^{Xo}_{AG} = \int_o^b (3/2\,x/b - 3/2\,x^2/b^2)\ Fb\ 1/EJ\ dx = [3/4\,x^2/b - 1/2\,x^3/b^2\,]_o^b\ Fb\ 1/EJ$

$= (3/4\,b - 1/2\,b)\ Fb\ 1/EJ = 1/4\ Fb^2/EJ$

$L^{Xo}_{HI} = \int_o^b (1/2 - x/b + 1/2\,x^2/b^2)\ Fb\ 1/EJ\ dx = [1/2\,x - 1/2\,x^2/b + 1/6\,x^3/b^2\,]_o^b\ Fb\ 1/EJ$

$= (1/2\,b - 1/2\,b + 1/6\,b)\ Fb\ 1/EJ = 1/6\ Fb^2/EJ$

$L^{Xo}_{IH} = \int_o^b (1/2\,x^2/b^2)\ Fb\ 1/EJ\ dx = [1/6\,x^3/b^2\,]_o^b\ Fb\ 1/EJ$

$= (1/6\,b)\ Fb\ 1/EJ = 1/6\ Fb^2/EJ$

$L^{Xo}_{HG} = \int_o^b (1/2 - 1/2\,x/b)\ Fb\ 1/EJ\ dx - 1\ \ (-1)\ \ (-1)\ \ Fb^2/EJ$

$= [1/2\,x - 1/4\,x^2/b\,]_o^b\ Fb\ 1/EJ\ - 1\ \ (-1)\ \ (-1)\ \ Fb^2/EJ$

$= (1/2\,b - 1/4\,b)\ Fb\ 1/EJ\ - 1\ \ (-1)\ \ (-1)\ \ Fb^2/EJ = -3/4\ \ Fb^2/EJ$

$L^{Xo}_{GH} = \int_o^b (1/2\,x/b)\ Fb\ 1/EJ\ dx - 1\ \ (-1)\ \ (-1)\ \ Fb^2/EJ = [1/4\,x^2/b\,]_o^b\ Fb\ 1/EJ\ - 1\ \ (-1)\ \ (-1)\ \ Fb^2/EJ$

$= (1/4\,b)\ Fb\ 1/EJ\ - 1\ \ (-1)\ \ (-1)\ \ Fb^2/EJ = -3/4\ \ Fb^2/EJ$

PROCEDIMENTO E RISULTATI 955375 ESΣ05.xxxx.057

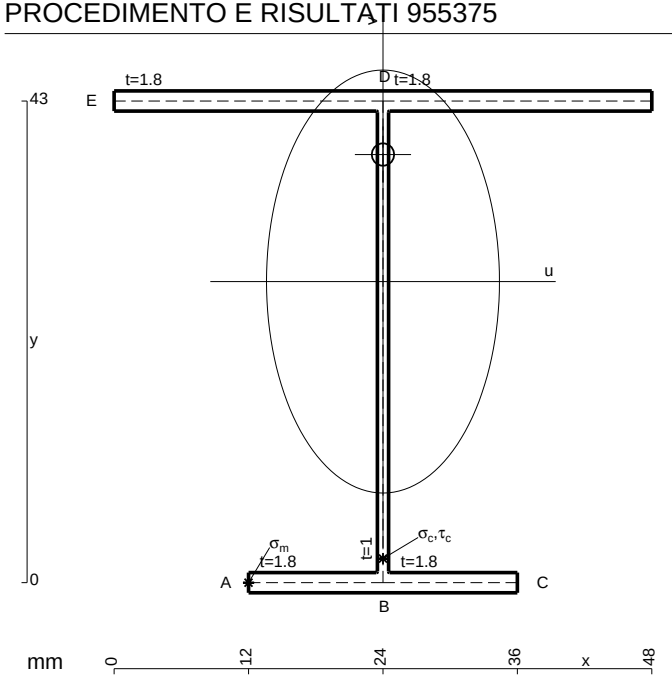

A = 172.6 mm^2
J_u = 61535. mm^4
J_v = 18662. mm^4
J_t = 154.3 mm^4
y_o = 11.34 mm
y_g = 26.88 mm
N = -265. N
T_y = 1060. N
M_x = -492900. Nmm
x_m = 12. mm
u_m = -12. mm
v_m = -26.88 mm
$\sigma_m = N/A - Mv/J_u$ = -216.9 N/mm^2
x_c = 24. mm
v_c = -26.88 mm
$\sigma_c = N/A - Mv/J_u$ = -216.9 N/mm^2
$\tau_c = TS^*/tJ_u$ = 20. N/mm^2
$\tau_g = TS^*/tJ_u$ = 20. N/mm^2
t_c = 530. mm
$\sigma_o = \sqrt{\sigma^2 + 3\tau^2}$ = 219.6 N/mm^2

@ Adolfo Zavelani Rossi, Politecnico di Milano, vers.27.03.13 01.12.25

ESΣ05.xxxx.057

@ Adolfo Zavelani Rossi, Politecnico di Milano, vers.27.03.13 01.12.25

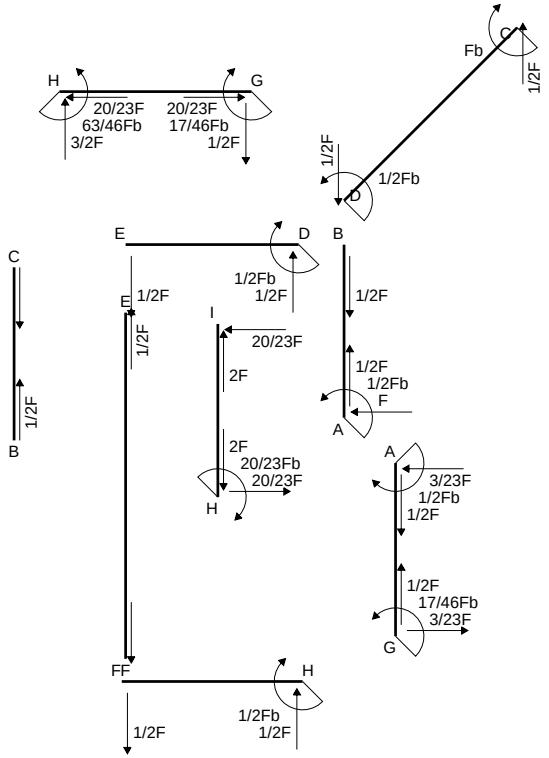
H
G
20/23F
63/46Fb
3/2F
20/23F
17/46Fb
1/2F
Fb
C
1/2F
1/2F
D
1/2Fb
E
D
B
C
1/2F
E
1/2F
1/2Fb
1/2F
1/2F
I
20/23F
2F
1/2F
1/2Fb
F
A
1/2F
B
2F
20/23Fb
20/23F
H
A
3/23F
1/2Fb
1/2F
1/2F
17/46Fb
3/23F
G
FF
H
1/2Fb
1/2F
1/2F

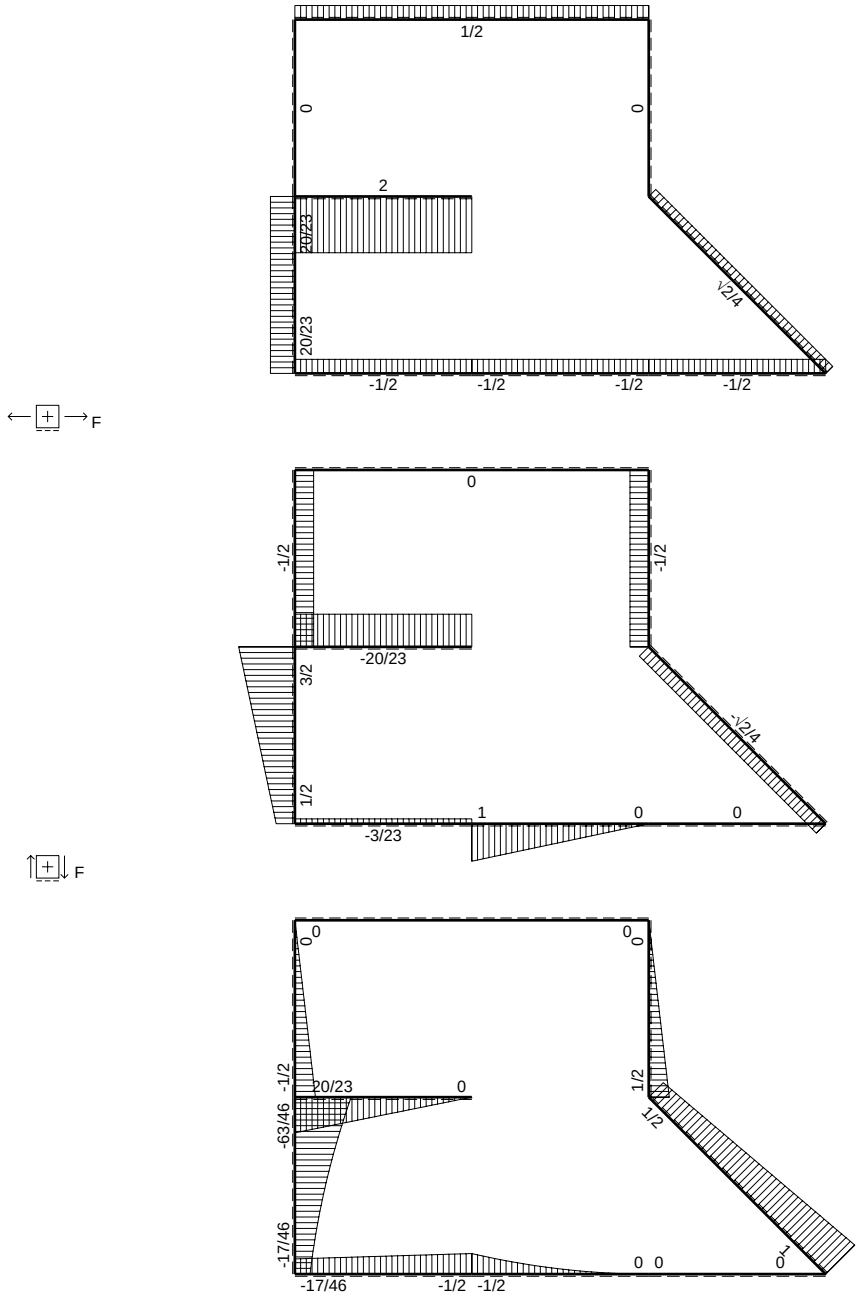
1/2
0
0
2
20/23
20/23
1/2/4
-1/2
-1/2
-1/2
-1/2
F
0
-1/2
-1/2
-20/23
3/2
-1/2/4
1/2
1
0
0
-3/23
F
0
0
0
0
-1/2
20/23
0
1/2
-63/46
1/2
-17/46
0 0
0
-17/46
-1/2 -1/2
Fb

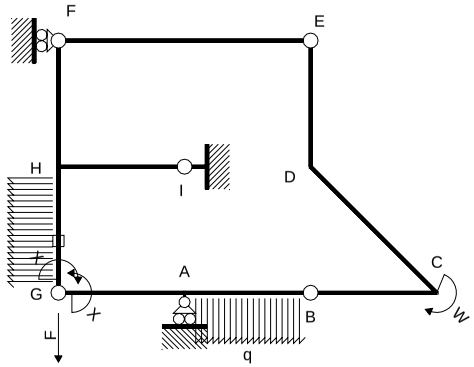

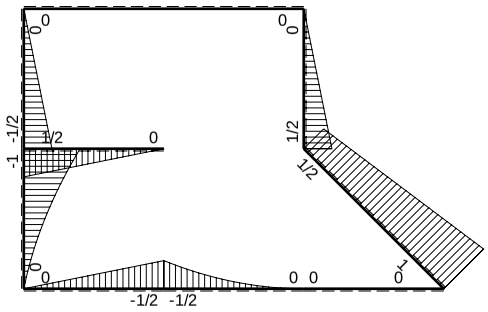

M_0 flessione da carichi assegnati

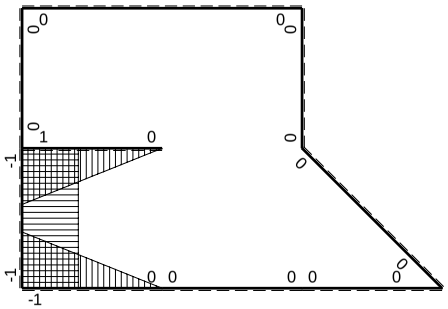

M_x flessione da iperstatica X=1

Quadro contributi PLV per iperstatica $X=W_{GA}$

→	$M_x(x)$	$M_o(x)$	M_xM_o	M_xM_x	$\int M_xM_o/EJdx$	$\int XM_xM_x/EJdx$
AB b	0	$-1/2Fb+Fx-1/2qx^2$	0	0	0	0
BA b	0	$1/2qx^2$	0	0		
BC b	0	0	0	0	0	0
CB b	0	0	0	0		
CD √2b	0	$Fb-\sqrt{2}/4Fx$	0	0	0	0
DE b	0	$1/2Fb-1/2Fx$	0	0	0	0
ED b	0	$-1/2Fx$	0	0		
EF 2b	0	0	0	0	0	0
FE 2b	0	0	0	0		
GA b	$-1+x/b$	$-1/2Fx$	$1/2Fx-1/2Fx^2/b$	$1-2x/b+x^2/b^2$	$1/12Fb^2/EJ$	$1/3Xb/EJ$
AG b	x/b	$1/2Fb-1/2Fx$	$1/2Fx-1/2Fx^2/b$	x^2/b^2		
FH b	0	$-1/2Fx$	0	0	0	0
HF b	0	$1/2Fb-1/2Fx$	0	0		
HI b	$1-x/b$	$1/2Fb-1/2Fx$	$1/2Fb-Fx+1/2Fx^2/b$	$1-2x/b+x^2/b^2$	$1/6Fb^2/EJ$	$1/3Xb/EJ$
IH b	$-x/b$	$-1/2Fx$	$1/2Fx^2/b$	x^2/b^2		
HG b	-1	$-Fb+3/2Fx-1/2qx^2$	$Fb-3/2Fx+1/2Fx^2/b$	1	$5/12Fb^2/EJ$	Xb/EJ
GH b	1	$1/2Fx+1/2qx^2$	$1/2Fx+1/2Fx^2/b$	1		
HG	elongazione asta $N_{1HG}\varepsilon_{HG}L_{HG}$				$-Fb^2/EJ$	
A	molla nodo $-V_{1A}(V_{0A}+XV_{1A})/k_A$				$-3/8Fb^2/EJ$	$1/4Xb/EJ$
	totali				$-17/24Fb^2/EJ$	$23/12Xb/EJ$
	iperstatica $X=W_{GA}$				17/46Fb	

Sviluppi di calcolo iperstatica

$L^{XX}_{GA} = \int_o^b (1 - 2\,x/b + x^2/b^2)\ 1/EJ\ dx = [\ x - x^2/b + 1/3\ x^3/b^2\ ]_o^b\ 1/EJ$

$= (\ b - b + 1/3\ b\ )\ 1/EJ\ = 1/3\ b/EJ$

$L^{XX}_{AG} = \int_o^b (\ x^2/b^2\ )\ 1/EJ\ dx = [1/3\ x^3/b^2\ ]_o^b\ 1/EJ$

$= (1/3\ b\ )\ 1/EJ\ = 1/3\ b/EJ$

$L^{XX}_{HI} = \int_o^b (1 - 2\,x/b + x^2/b^2)\ 1/EJ\ dx = [\ x - x^2/b + 1/3\ x^3/b^2\ ]_o^b\ 1/EJ$

$= (\ b - b + 1/3\ b\ )\ 1/EJ\ = 1/3\ b/EJ$

$L^{XX}_{IH} = \int_o^b (\ x^2/b^2\ )\ 1/EJ\ dx = [1/3\ x^3/b^2\ ]_o^b\ 1/EJ$

$= (1/3\ b\ )\ 1/EJ\ = 1/3\ b/EJ$

$L^{XX}_{HG} = \int_o^b (1\ )\ 1/EJ\ dx = [\ x\ ]_o^b\ 1/EJ$

$= (\ b\ )\ 1/EJ\ =\ b/EJ$

$L^{XX}_{GH} = \int_o^b (1\ )\ 1/EJ\ dx = [\ x\ ]_o^b\ 1/EJ$

$= (\ b\ )\ 1/EJ\ =\ b/EJ$

$L^{Xo}_{GA} = \int_o^b (1/2\ x/b - 1/2\ x^2/b^2\ )\ Fb\ 1/EJ\ dx = [1/4\ x^2/b - 1/6\ x^3/b^2\ ]_o^b\ Fb\ 1/EJ$

$= (1/4\ b - 1/6\ b\ )\ Fb\ 1/EJ\ = 1/12\ \ Fb^2/EJ$

$L^{Xo}_{AG} = \int_o^b (1/2\ x/b - 1/2\ x^2/b^2\ )\ Fb\ 1/EJ\ dx = [1/4\ x^2/b - 1/6\ x^3/b^2\ ]_o^b\ Fb\ 1/EJ$

$= (1/4\ b - 1/6\ b\ )\ Fb\ 1/EJ\ = 1/12\ \ Fb^2/EJ$

$L^{Xo}_{HI} = \int_o^b (1/2 - x/b + 1/2\ x^2/b^2\ )\ Fb\ 1/EJ\ dx = [1/2\ x - 1/2\ x^2/b + 1/6\ x^3/b^2\ ]_o^b\ Fb\ 1/EJ$

$= (1/2\ b - 1/2\ b + 1/6\ b\ )\ Fb\ 1/EJ\ = 1/6\ \ Fb^2/EJ$

$L^{Xo}_{IH} = \int_o^b (1/2\ x^2/b^2\ )\ Fb\ 1/EJ\ dx = [1/6\ x^3/b^2\ ]_o^b\ Fb\ 1/EJ$

$= (1/6\ b\ )\ Fb\ 1/EJ\ = 1/6\ \ Fb^2/EJ$

$L^{Xo}_{HG} = \int_o^b (1 - 3/2\ x/b + 1/2\ x^2/b^2\ )\ Fb\ 1/EJ\ dx - 1\ \ (-1)\ \ (-1)\ \ Fb^2/EJ$

$= [\ x - 3/4\ x^2/b + 1/6\ x^3/b^2\ ]_o^b\ Fb\ 1/EJ\ - 1\ \ (-1)\ \ (-1)\ \ Fb^2/EJ$

$= (\ b - 3/4\ b + 1/6\ b\ )\ Fb\ 1/EJ\ - 1\ \ (-1)\ \ (-1)\ \ Fb^2/EJ = -7/12\ \ Fb^2/EJ$

$L^{Xo}_{GH} = \int_o^b (1/2\ x/b + 1/2\ x^2/b^2\ )\ Fb\ 1/EJ\ dx - 1\ \ (-1)\ \ (-1)\ \ Fb^2/EJ$

$= [1/4\ x^2/b + 1/6\ x^3/b^2\ ]_o^b\ Fb\ 1/EJ\ - 1\ \ (-1)\ \ (-1)\ \ Fb^2/EJ$

$= (1/4\ b + 1/6\ b\ )\ Fb\ 1/EJ\ - 1\ \ (-1)\ \ (-1)\ \ Fb^2/EJ = -7/12\ \ Fb^2/EJ$

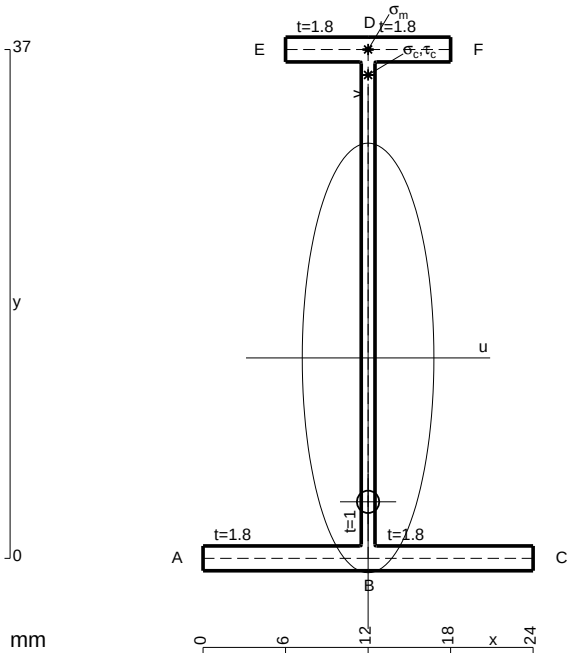

$A = 101.8\ mm^2$

$J_u = 24830.\ mm^4$

$J_v = 2333.\ mm^4$

$J_t = 82.32\ mm^4$

$y_o = -10.46\ mm$

$y_g = 14.57\ mm$

$N = -470.\ N$

$T_y = 940.\ N$

$M_x = -258500.\ Nmm$

$x_m = 12.\ mm$

$y_m = 37.\ mm$

$v_m = 22.43\ mm$

$\sigma_m = N/A - Mv/J_u = 228.8\ N/mm^2$

$y_c = 2.\ mm$

$u_c = -12.\ mm$

$v_c = -12.57\ mm$

$\sigma_c = N/A - Mv/J_u = 228.8\ N/mm^2$

$\tau_c = TS^*/tJ_u = 18.34\ N/mm^2$

$\tau_g = TS^*/tJ_u = 18.34\ N/mm^2$

$t_c = 940.\ mm$

$\sigma_o = \sqrt{\sigma^2 + 3\tau^2} = 231.\ N/mm^2$

ESΣ05.xxxx.058

@ Adolfo Zavelani Rossi, Politecnico di Milano, vers.27.03.13 01.12.25

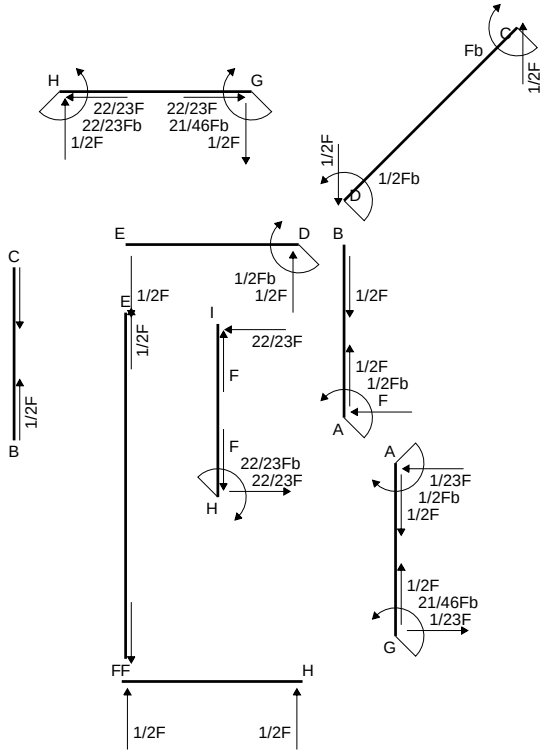
H
G
22/23F
22/23Fb
1/2F
22/23F
21/46Fb
1/2F
Fb
C
1/2F
1/2F
1/2Fb
D
E
D
B
C
1/2Fb
1/2F
1/2F
E
1/2F
I
22/23F
F
1/2F
1/2Fb
F
A
1/2F
B
F
22/23Fb
22/23F
H
A
1/23F
1/2Fb
1/2F
1/2F
21/46Fb
1/23F
G
FF
H
1/2F
1/2F

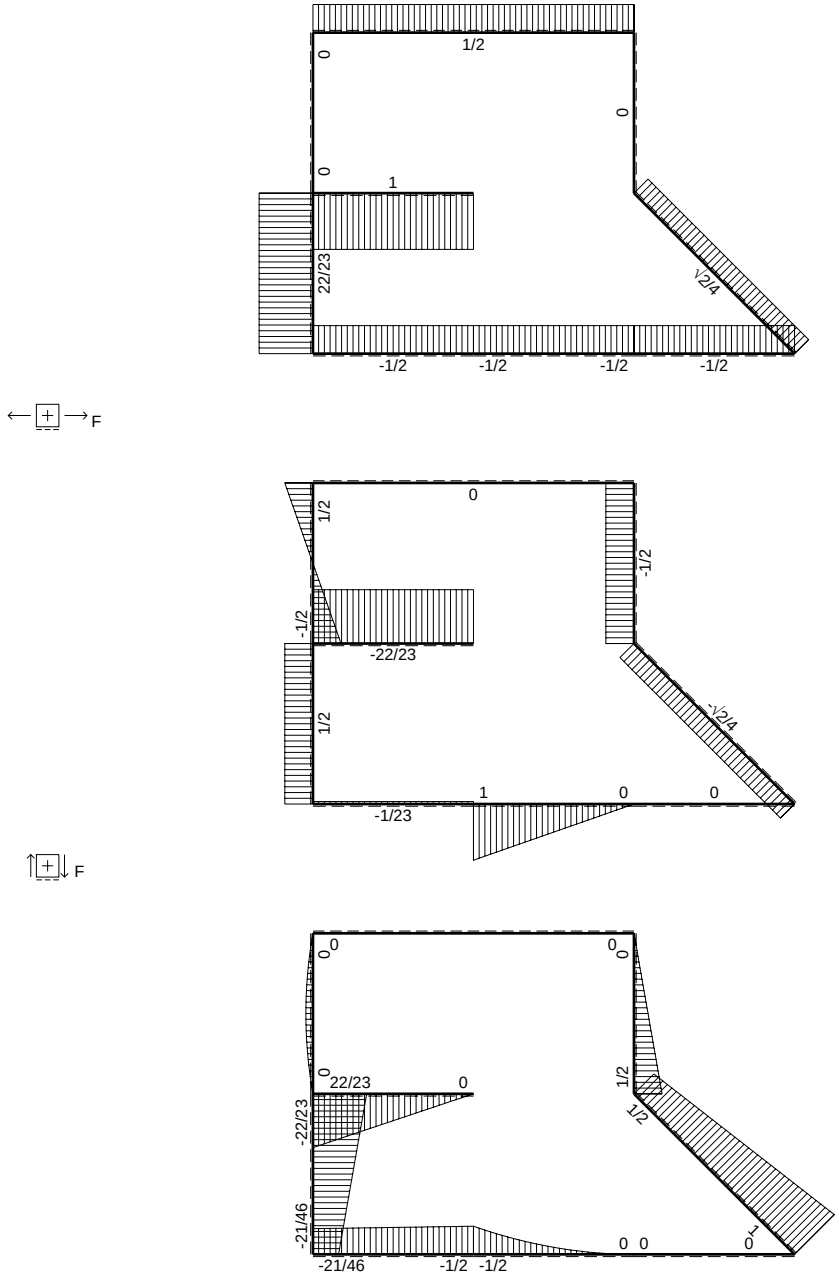
1/2
0
0
0
1
22/23
√2/4
-1/2
-1/2
-1/2
-1/2
F
0
1/2
-1/2
-1/2
-22/23
1/2
-√2/4
1
0
0
-1/23
F
0
0
0
0
0
22/23
0
1/2
1/2
-22/23
-21/46
1
0 0
0
-21/46
-1/2 -1/2
Fb

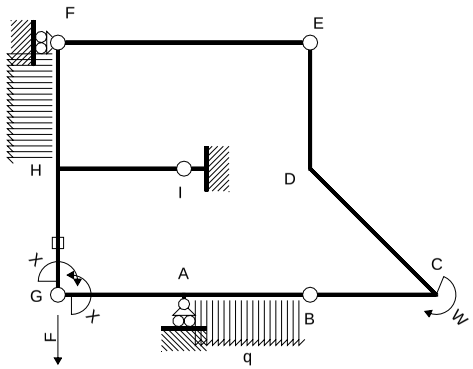

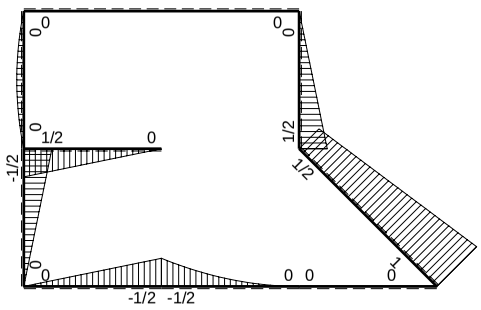

M_0 flessione da carichi assegnati

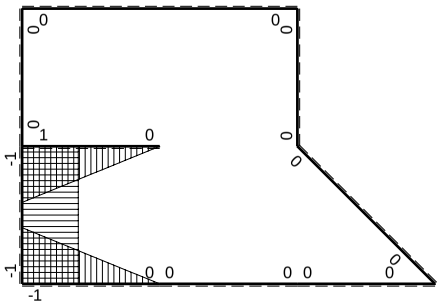

M_x flessione da iperstatica X=1

Quadro contributi PLV per iperstatica $X=W_{GA}$

→	$M_x(x)$	$M_o(x)$	M_xM_o	M_xM_x	$\int M_xM_o/EJdx$	$\int XM_xM_x/EJdx$
AB b	0	$-1/2Fb+Fx-1/2qx^2$	0	0	0	0
BA b	0	$1/2qx^2$	0	0		
BC b	0	0	0	0	0	0
CB b	0	0	0	0		
CD $\sqrt{2}b$	0	$Fb-\sqrt{2}/4Fx$	0	0	0	0
DE b	0	$1/2Fb-1/2Fx$	0	0	0	0
ED b	0	$-1/2Fx$	0	0		
EF 2b	0	0	0	0	0	0
FE 2b	0	0	0	0		
GA b	$-1+x/b$	$-1/2Fx$	$1/2Fx-1/2Fx^2/b$	$1-2x/b+x^2/b^2$	$1/12Fb^2/EJ$	$1/3Xb/EJ$
AG b	x/b	$1/2Fb-1/2Fx$	$1/2Fx-1/2Fx^2/b$	x^2/b^2		
FH b	0	$1/2Fx-1/2qx^2$	0	0	0	0
HF b	0	$-1/2Fx+1/2qx^2$	0	0		
HI b	$1-x/b$	$1/2Fb-1/2Fx$	$1/2Fb-Fx+1/2Fx^2/b$	$1-2x/b+x^2/b^2$	$1/6Fb^2/EJ$	$1/3Xb/EJ$
IH b	$-x/b$	$-1/2Fx$	$1/2Fx^2/b$	x^2/b^2		
HG b	-1	$-1/2Fb+1/2Fx$	$1/2Fb-1/2Fx$	1	$1/4Fb^2/EJ$	Xb/EJ
GH b	1	$1/2Fx$	$1/2Fx$	1		
HG	elongazione asta $N_{1HG}\varepsilon_{HG}L_{HG}$				$-Fb^2/EJ$	
A	molla nodo $-V_{1A}(V_{0A}+XV_{1A})/k_A$				$-3/8Fb^2/EJ$	$1/4Xb/EJ$
	totali				$-7/8Fb^2/EJ$	$23/12Xb/EJ$
	iperstatica $X=W_{GA}$				21/46Fb	

Sviluppi di calcolo iperstatica

$L^{XX}_{GA} = \int_o^b (1 - 2\,x/b + x^2/b^2)\ 1/EJ\ dx = [\,x - x^2/b + 1/3\,x^3/b^2\,]_o^b\ 1/EJ$

$= (\,b - b + 1/3\,b\,)\ 1/EJ = 1/3\ b/EJ$

$L^{XX}_{AG} = \int_o^b (\,x^2/b^2\,)\ 1/EJ\ dx = [1/3\,x^3/b^2\,]_o^b\ 1/EJ$

$= (1/3\,b)\ 1/EJ = 1/3\ b/EJ$

$L^{XX}_{HI} = \int_o^b (1 - 2\,x/b + x^2/b^2)\ 1/EJ\ dx = [\,x - x^2/b + 1/3\,x^3/b^2\,]_o^b\ 1/EJ$

$= (\,b - b + 1/3\,b\,)\ 1/EJ = 1/3\ b/EJ$

$L^{XX}_{IH} = \int_o^b (\,x^2/b^2\,)\ 1/EJ\ dx = [1/3\,x^3/b^2\,]_o^b\ 1/EJ$

$= (1/3\,b)\ 1/EJ = 1/3\ b/EJ$

$L^{XX}_{HG} = \int_o^b (1)\ 1/EJ\ dx = [\,x\,]_o^b\ 1/EJ$

$= (\,b\,)\ 1/EJ = b/EJ$

$L^{XX}_{GH} = \int_o^b (1)\ 1/EJ\ dx = [\,x\,]_o^b\ 1/EJ$

$= (\,b\,)\ 1/EJ = b/EJ$

$L^{Xo}_{GA} = \int_o^b (1/2\,x/b - 1/2\,x^2/b^2)\ Fb\ 1/EJ\ dx = [1/4\,x^2/b - 1/6\,x^3/b^2\,]_o^b\ Fb\ 1/EJ$

$= (1/4\,b - 1/6\,b)\ Fb\ 1/EJ = 1/12\ Fb^2/EJ$

$L^{Xo}_{AG} = \int_o^b (1/2\,x/b - 1/2\,x^2/b^2)\ Fb\ 1/EJ\ dx = [1/4\,x^2/b - 1/6\,x^3/b^2\,]_o^b\ Fb\ 1/EJ$

$= (1/4\,b - 1/6\,b)\ Fb\ 1/EJ = 1/12\ Fb^2/EJ$

$L^{Xo}_{HI} = \int_o^b (1/2 - x/b + 1/2\,x^2/b^2)\ Fb\ 1/EJ\ dx = [1/2\,x - 1/2\,x^2/b + 1/6\,x^3/b^2\,]_o^b\ Fb\ 1/EJ$

$= (1/2\,b - 1/2\,b + 1/6\,b)\ Fb\ 1/EJ = 1/6\ Fb^2/EJ$

$L^{Xo}_{IH} = \int_o^b (1/2\,x^2/b^2)\ Fb\ 1/EJ\ dx = [1/6\,x^3/b^2\,]_o^b\ Fb\ 1/EJ$

$= (1/6\,b)\ Fb\ 1/EJ = 1/6\ Fb^2/EJ$

$L^{Xo}_{HG} = \int_o^b (1/2 - 1/2\,x/b)\ Fb\ 1/EJ\ dx - 1\ \ (-1)\ \ (-1)\ \ Fb^2/EJ$

$= [1/2\,x - 1/4\,x^2/b\,]_o^b\ Fb\ 1/EJ\ - 1\ \ (-1)\ \ (-1)\ \ Fb^2/EJ$

$= (1/2\,b - 1/4\,b)\ Fb\ 1/EJ\ - 1\ \ (-1)\ \ (-1)\ \ Fb^2/EJ = -3/4\ \ Fb^2/EJ$

$L^{Xo}_{GH} = \int_o^b (1/2\,x/b)\ Fb\ 1/EJ\ dx - 1\ \ (-1)\ \ (-1)\ \ Fb^2/EJ = [1/4\,x^2/b\,]_o^b\ Fb\ 1/EJ\ - 1\ \ (-1)\ \ (-1)\ \ Fb^2/EJ$

$= (1/4\,b)\ Fb\ 1/EJ\ - 1\ \ (-1)\ \ (-1)\ \ Fb^2/EJ = -3/4\ \ Fb^2/EJ$

PROCEDIMENTO E RISULTATI 240138 ESΣ05.xxxx.059

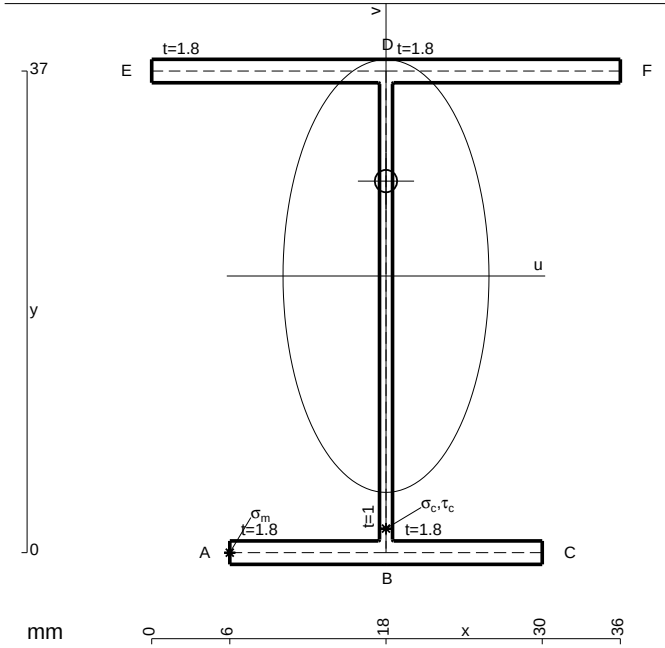

A = 145. mm^2
J_u = 40083. mm^4
J_v = 9072. mm^4
J_t = 129. mm^4
y_o = 7.287 mm
y_g = 21.26 mm
N = -760. N
T_y = 1520. N
M_x = -440800. Nmm
x_m = 6. mm
u_m = -12. mm
v_m = -21.26 mm
$\sigma_m = N/A - Mv/J_u$ = -239. N/mm^2
x_c = 18. mm
v_c = -21.26 mm
$\sigma_c = N/A - Mv/J_u$ = -239. N/mm^2
$\tau_c = TS^*/tJ_u$ = 34.82 N/mm^2
$\tau_g = TS^*/tJ_u$ = 34.82 N/mm^2
t_c = 1520. mm
$\sigma_o = \sqrt{\sigma^2 + 3\tau^2}$ = 246.5 N/mm^2

@ Adolfo Zavelani Rossi, Politecnico di Milano, vers.27.03.13 01.12.25

ESΣ05.xxxx.059

@ Adolfo Zavelani Rossi, Politecnico di Milano, vers.27.03.13 01.12.25

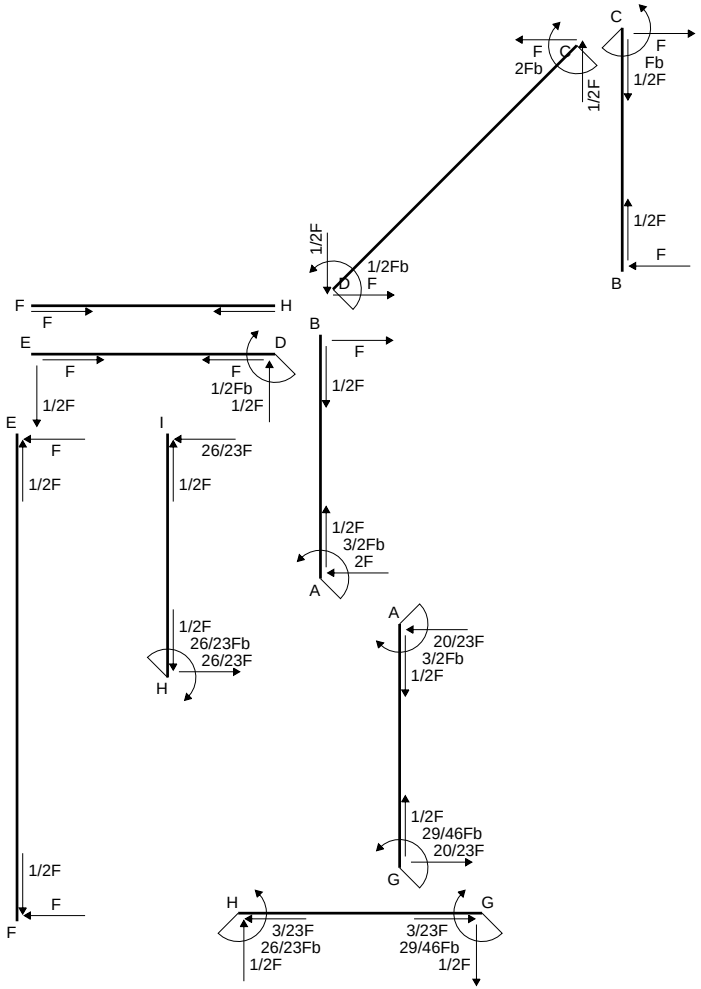
C
F
Fb
1/2F
F
2Fb
C
1/2F
1/2F
F
B
1/2F
1/2Fb
D
F
F
H
F
E
D
B
F
F
1/2Fb
1/2F
F
1/2F
1/2F
E
I
26/23F
F
1/2F
1/2F
1/2F
3/2Fb
2F
A
A
20/23F
3/2Fb
1/2F
1/2F
26/23Fb
26/23F
H
1/2F
29/46Fb
20/23F
G
1/2F
F
F
H
G
3/23F
26/23Fb
1/2F
3/23F
29/46Fb
1/2F

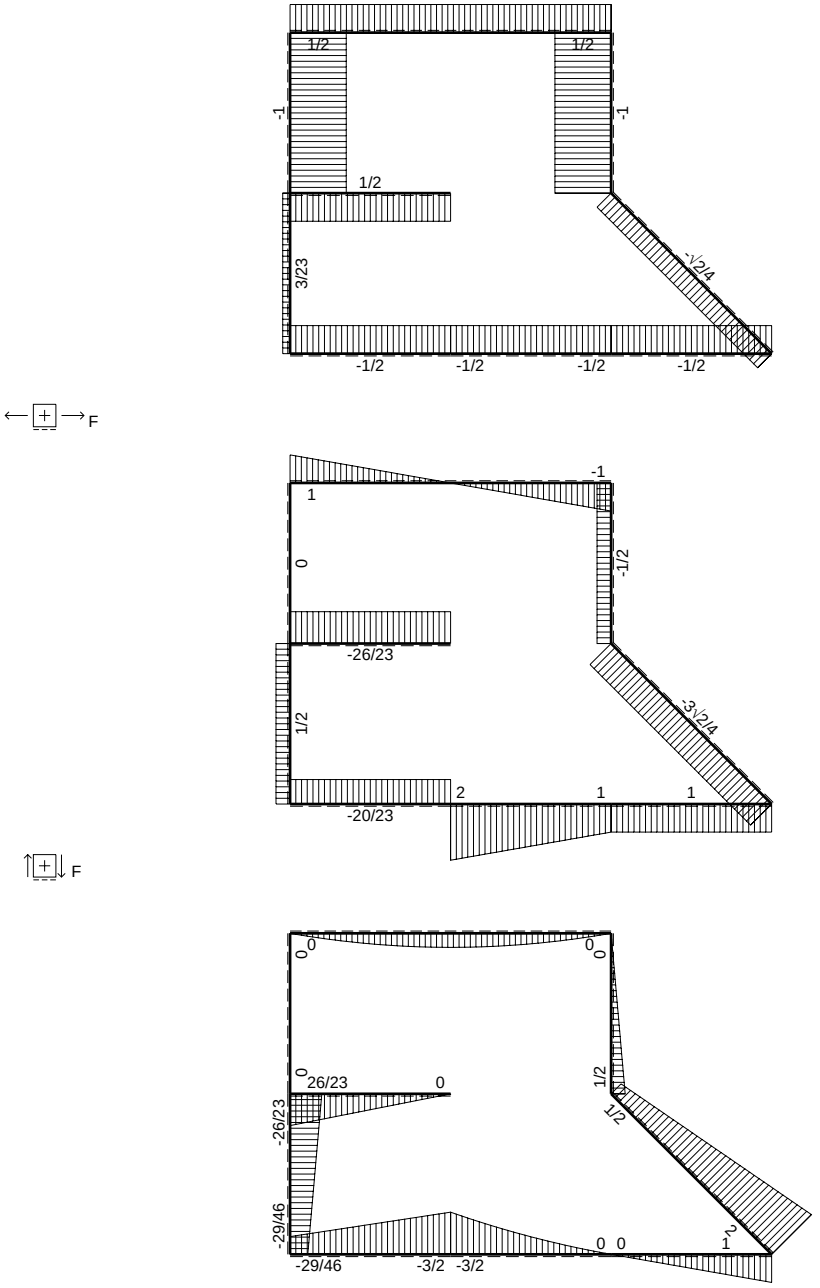
1/2
1/2
-1
-1
1/2
3/23
-1/2
-1/2
-1/2
-1/2
-1/2
F
1
-1
0
-1/2
-26/23
1/2
-3/2
2
1
1
-20/23
F
0
0
0
0
26/23
0
1/2
1/2
-26/23
-29/46
0
0
1
-29/46
-3/2
-3/2
Fb

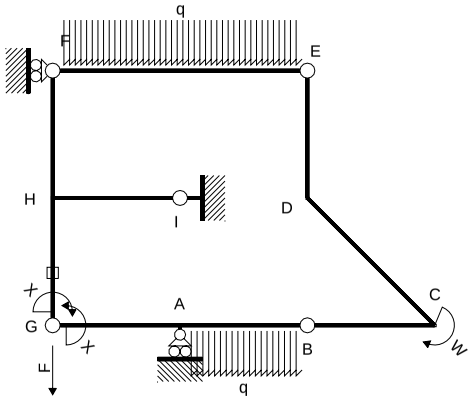

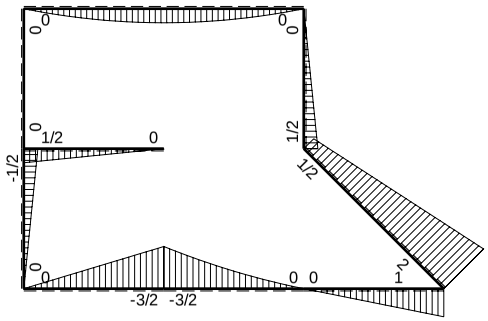

M_0 flessione da carichi assegnati

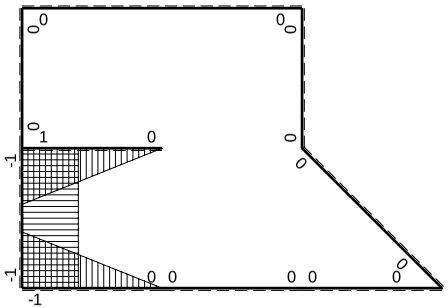

M_x flessione da iperstatica X=1

Quadro contributi PLV per iperstatica $X=W_{GA}$

→	$M_x(x)$	$M_0(x)$	M_xM_0	M_xM_x	$\int M_xM_0/EJdx$	$\int XM_xM_x/EJdx$
AB b	0	$-3/2Fb+2Fx-1/2qx^2$	0	0	0	0
BA b	0	$Fx+1/2qx^2$	0	0		
BC b	0	Fx	0	0	0	0
CB b	0	-Fb+Fx	0	0		
CD $\sqrt{2}b$	0	$2Fb-3\sqrt{2}/4Fx$	0	0	0	0
DE b	0	1/2Fb-1/2Fx	0	0	0	0
ED b	0	-1/2Fx	0	0		
EF 2b	0	$-Fx+1/2qx^2$	0	0	0	0
FE 2b	0	$Fx-1/2qx^2$	0	0		
GA b	-1+x/b	-3/2Fx	$3/2Fx-3/2Fx^2/b$	$1-2x/b+x^2/b^2$	$1/4Fb^2/EJ$	1/3Xb/EJ
AG b	x/b	3/2Fb-3/2Fx	$3/2Fx-3/2Fx^2/b$	x^2/b^2		
FH b	0	0	0	0	0	0
HF b	0	0	0	0		
HI b	1-x/b	1/2Fb-1/2Fx	$1/2Fb-Fx+1/2Fx^2/b$	$1-2x/b+x^2/b^2$	$1/6Fb^2/EJ$	1/3Xb/EJ
IH b	-x/b	-1/2Fx	$1/2Fx^2/b$	x^2/b^2		
HG b	-1	-1/2Fb+1/2Fx	1/2Fb-1/2Fx	1	$1/4Fb^2/EJ$	Xb/EJ
GH b	1	1/2Fx	1/2Fx	1		
HG	elongazione asta $N_{1HG}\varepsilon_{HG}L_{HG}$				$-Fb^2/EJ$	
A	molla nodo $-V_{1A}(V_{0A}+XV_{1A})/k_A$				-7/8Fb^2/EJ	1/4Xb/EJ
	totali				$-29/24Fb^2/EJ$	23/12Xb/EJ
	iperstatica $X=W_{GA}$				29/46Fb	

Sviluppi di calcolo iperstatica

$L^{XX}_{GA} = \int_o^b (1 - 2\,x/b + x^2/b^2)\ 1/EJ\ dx = [\,x - x^2/b + 1/3\,x^3/b^2\,]_o^b\ 1/EJ$

$= (\,b - b + 1/3\,b\,)\ 1/EJ = 1/3\ b/EJ$

$L^{XX}_{AG} = \int_o^b (\,x^2/b^2\,)\ 1/EJ\ dx = [1/3\,x^3/b^2\,]_o^b\ 1/EJ$

$= (1/3\,b\,)\ 1/EJ = 1/3\ b/EJ$

$L^{XX}_{HI} = \int_o^b (1 - 2\,x/b + x^2/b^2)\ 1/EJ\ dx = [\,x - x^2/b + 1/3\,x^3/b^2\,]_o^b\ 1/EJ$

$= (\,b - b + 1/3\,b\,)\ 1/EJ = 1/3\ b/EJ$

$L^{XX}_{IH} = \int_o^b (\,x^2/b^2\,)\ 1/EJ\ dx = [1/3\,x^3/b^2\,]_o^b\ 1/EJ$

$= (1/3\,b\,)\ 1/EJ = 1/3\ b/EJ$

$L^{XX}_{HG} = \int_o^b (1)\ 1/EJ\ dx = [\,x\,]_o^b\ 1/EJ$

$= (\,b\,)\ 1/EJ = b/EJ$

$L^{XX}_{GH} = \int_o^b (1)\ 1/EJ\ dx = [\,x\,]_o^b\ 1/EJ$

$= (\,b\,)\ 1/EJ = b/EJ$

$L^{Xo}_{GA} = \int_o^b (3/2\,x/b - 3/2\,x^2/b^2)\ Fb\ 1/EJ\ dx = [3/4\,x^2/b - 1/2\,x^3/b^2\,]_o^b\ Fb\ 1/EJ$

$= (3/4\,b - 1/2\,b\,)\ Fb\ 1/EJ = 1/4\ Fb^2/EJ$

$L^{Xo}_{AG} = \int_o^b (3/2\,x/b - 3/2\,x^2/b^2\,)\ Fb\ 1/EJ\ dx = [3/4\,x^2/b - 1/2\,x^3/b^2\,]_o^b\ Fb\ 1/EJ$

$= (3/4\,b - 1/2\,b\,)\ Fb\ 1/EJ = 1/4\ Fb^2/EJ$

$L^{Xo}_{HI} = \int_o^b (1/2 - x/b + 1/2\,x^2/b^2\,)\ Fb\ 1/EJ\ dx = [1/2\,x - 1/2\,x^2/b + 1/6\,x^3/b^2\,]_o^b\ Fb\ 1/EJ$

$= (1/2\,b - 1/2\,b + 1/6\,b\,)\ Fb\ 1/EJ = 1/6\ Fb^2/EJ$

$L^{Xo}_{IH} = \int_o^b (1/2\,x^2/b^2\,)\ Fb\ 1/EJ\ dx = [1/6\,x^3/b^2\,]_o^b\ Fb\ 1/EJ$

$= (1/6\,b\,)\ Fb\ 1/EJ = 1/6\ Fb^2/EJ$

$L^{Xo}_{HG} = \int_o^b (1/2 - 1/2\,x/b\,)\ Fb\ 1/EJ\ dx - 1\ \ (-1)\ \ (-1)\ \ Fb^2/EJ$

$= [1/2\,x - 1/4\,x^2/b\,]_o^b\ Fb\ 1/EJ\ - 1\ \ (-1)\ \ (-1)\ \ Fb^2/EJ$

$= (1/2\,b - 1/4\,b\,)\ Fb\ 1/EJ\ - 1\ \ (-1)\ \ (-1)\ \ Fb^2/EJ = -3/4\ \ Fb^2/EJ$

$L^{Xo}_{GH} = \int_o^b (1/2\,x/b\,)\ Fb\ 1/EJ\ dx - 1\ \ (-1)\ \ (-1)\ \ Fb^2/EJ = [1/4\,x^2/b\,]_o^b\ Fb\ 1/EJ\ - 1\ \ (-1)\ \ (-1)\ \ Fb^2/EJ$

$= (1/4\,b\,)\ Fb\ 1/EJ\ - 1\ \ (-1)\ \ (-1)\ \ Fb^2/EJ = -3/4\ \ Fb^2/EJ$

PROCEDIMENTO E RISULTATI 237067 ESΣ05.xxxx.060

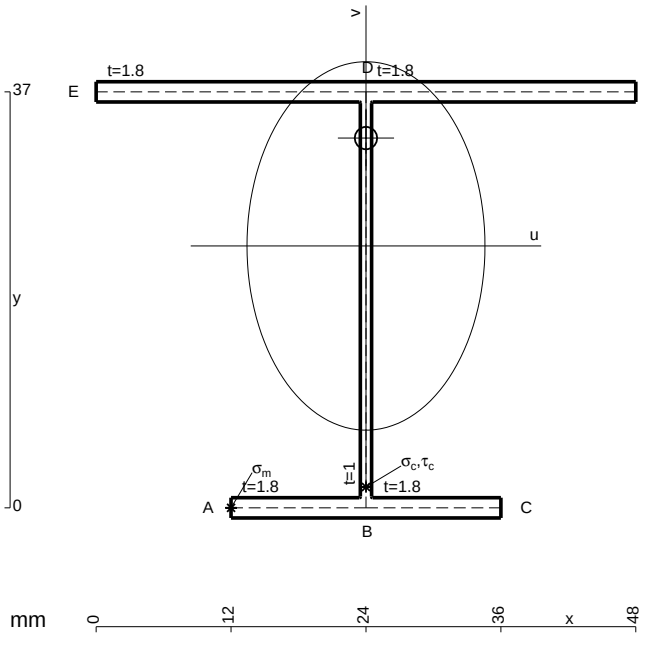

A = 166.6 mm^2
J_u = 44743. mm^4
J_v = 18662. mm^4
J_t = 152.3 mm^4
y_o = 9.592 mm
y_g = 23.3 mm
N = -405. N
T_y = 1620. N
M_x = -376650. Nmm
x_m = 12. mm
u_m = -12. mm
v_m = -23.3 mm
$\sigma_m = N/A - Mv/J_u$ = -198.5 N/mm^2
x_c = 24. mm
v_c = -23.3 mm
$\sigma_c = N/A - Mv/J_u$ = -198.5 N/mm^2
$\tau_c = TS^*/tJ_u$ = 36.44 N/mm^2
$\tau_g = TS^*/tJ_u$ = 36.44 N/mm^2
t_c = 810. mm
$\sigma_o = \sqrt{\sigma^2 + 3\tau^2}$ = 208.3 N/mm^2

@ Adolfo Zavelani Rossi, Politecnico di Milano, vers.27.03.13 01.12.25

ESΣ05.xxxx.060

@ Adolfo Zavelani Rossi, Politecnico di Milano, vers.27.03.13 01.12.25

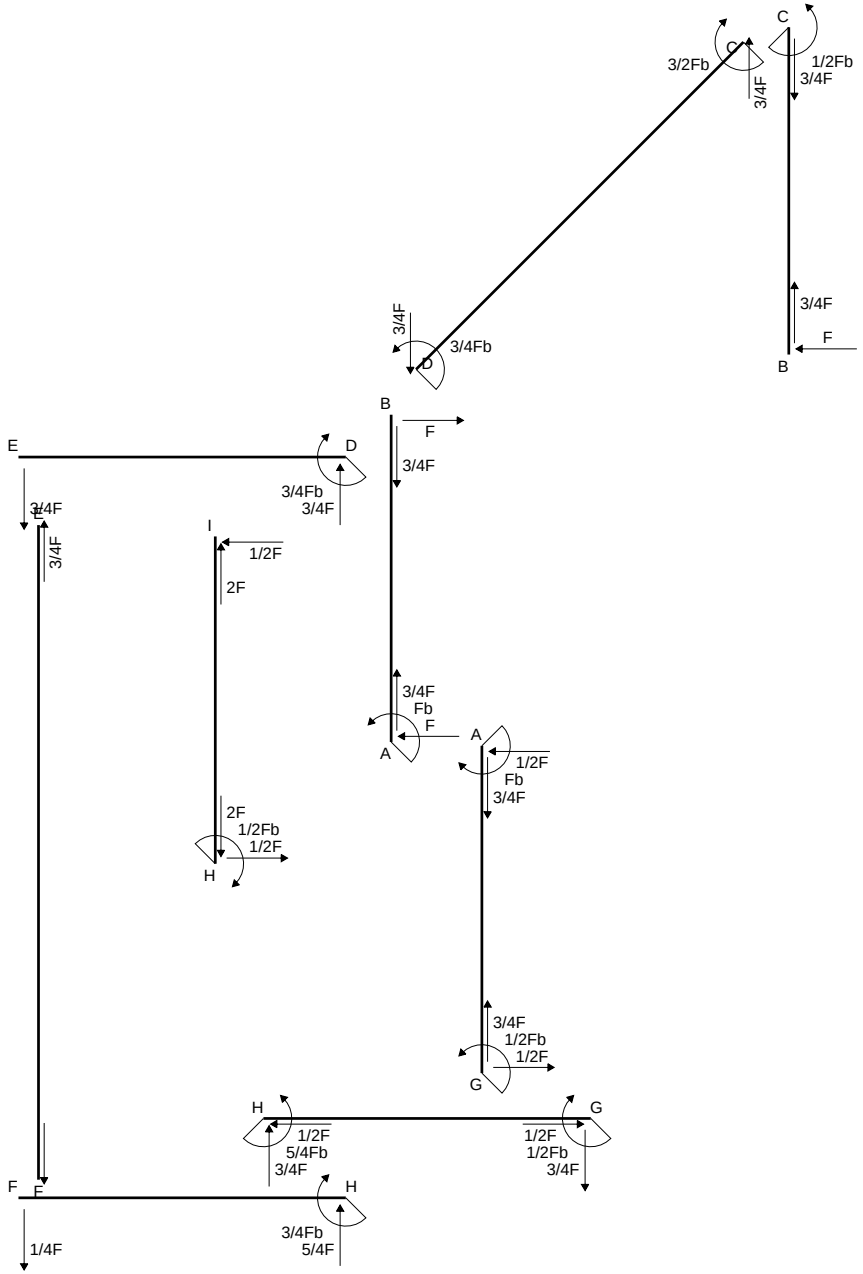
C
C
3/2Fb
1/2Fb
3/4F
3/4F
3/4F
F
B
3/4F
3/4Fb
D
B
F
3/4F
E
D
3/4Fb
3/4F
E
3/4F
3/4F
I
1/2F
2F
3/4F
Fb
F
A
A
1/2F
Fb
3/4F
2F
1/2Fb
1/2F
H
3/4F
1/2Fb
1/2F
G
H
1/2F
5/4Fb
3/4F
1/2F
1/2Fb
3/4F
G
F
F
H
3/4Fb
5/4F
1/4F

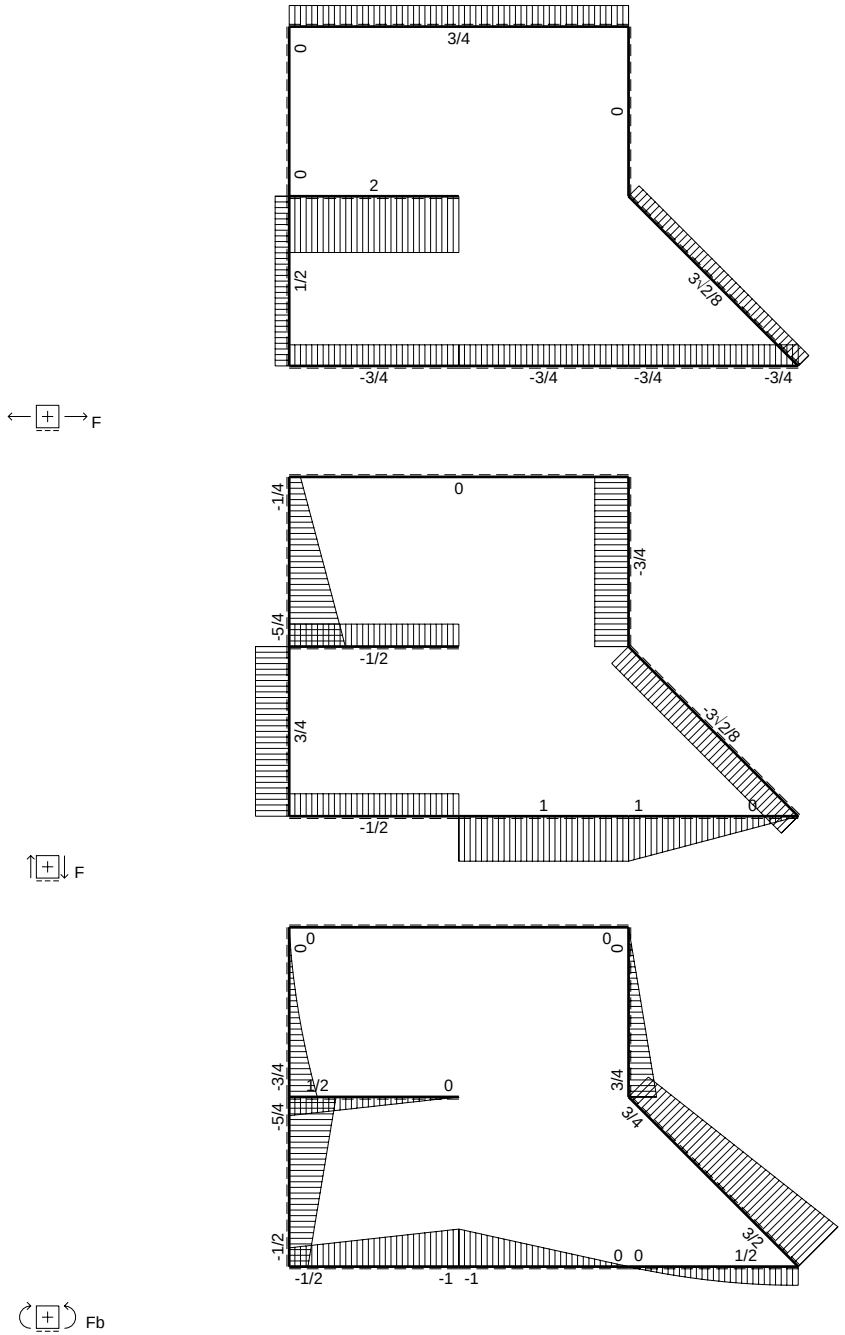
3/4
0
0
0
2
1/2
3√2/8
-3/4
-3/4
-3/4
-3/4
F
-1/4
0
-3/4
-5/4
-1/2
3/4
-3√2/8
1
1
0
-1/2
F
0
0
0
0
-3/4
1/2
0
-5/4
3/4
3/4
3√2/8
-1/2
0
0
1/2
-1/2
-1
-1
Fb

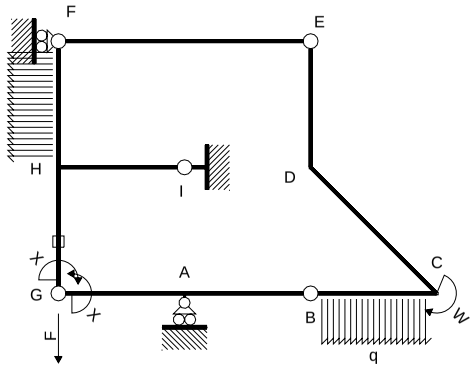

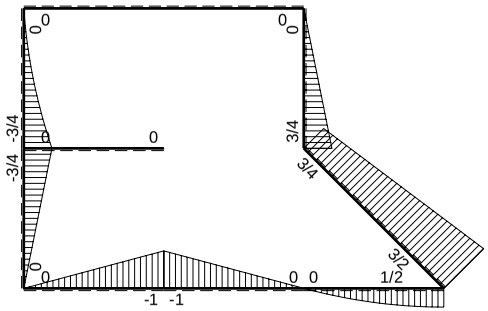

M_0 flessione da carichi assegnati

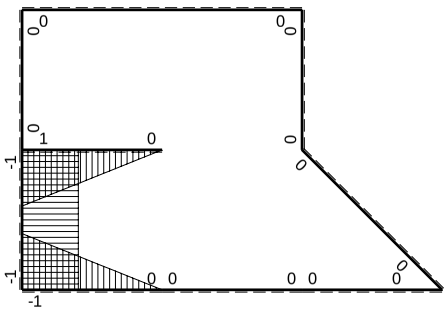

M_x flessione da iperstatica X=1

Quadro contributi PLV per iperstatica $X=W_{GA}$

→	$M_x(x)$	$M_0(x)$	M_xM_0	M_xM_x	$\int M_xM_0/EJdx$	$\int XM_xM_x/EJdx$
AB b	0	-Fb+Fx	0	0	0	0
BA b	0	Fx	0	0		
BC b	0	$Fx-1/2qx^2$	0	0	0	0
CB b	0	$-1/2Fb+1/2qx^2$	0	0		
CD √2b	0	$3/2Fb-3\sqrt{2}/8Fx$	0	0	0	0
DE b	0	3/4Fb-3/4Fx	0	0	0	0
ED b	0	-3/4Fx	0	0		
EF 2b	0	0	0	0	0	0
FE 2b	0	0	0	0		
GA b	-1+x/b	-Fx	$Fx-Fx^2/b$	$1-2x/b+x^2/b^2$	$1/6Fb^2/EJ$	1/3Xb/EJ
AG b	x/b	Fb-Fx	$Fx-Fx^2/b$	x^2/b^2		
FH b	0	$-1/4Fx-1/2qx^2$	0	0	0	0
HF b	0	$3/4Fb-5/4Fx+1/2qx^2$	0	0		
HI b	1-x/b	0	0	$1-2x/b+x^2/b^2$	0	1/3Xb/EJ
IH b	-x/b	0	0	x^2/b^2		
HG b	-1	-3/4Fb+3/4Fx	3/4Fb-3/4Fx	1	$3/8Fb^2/EJ$	Xb/EJ
GH b	1	3/4Fx	3/4Fx	1		
HG	elongazione asta $N_{1HG}\varepsilon_{HG}L_{HG}$				$-Fb^2/EJ$	
A	molla nodo $-V_{1A}(V_{0A}+XV_{1A})/k_A$				$-1/2Fb^2/EJ$	1/4Xb/EJ
	totali				$-23/24Fb^2/EJ$	23/12Xb/EJ
	iperstatica $X=W_{GA}$				1/2Fb	

Sviluppi di calcolo iperstatica

$L^{XX}_{GA} = \int_o^b (1 - 2\,x/b + x^2/b^2)\ 1/EJ\ dx = [\,x - x^2/b + 1/3\ x^3/b^2\,]_o^b\ 1/EJ$

$= (\,b - b + 1/3\ b\,)\ 1/EJ\ = 1/3\ b/EJ$

$L^{XX}_{AG} = \int_o^b (\,x^2/b^2\,)\ 1/EJ\ dx = [1/3\ x^3/b^2\,]_o^b\ 1/EJ$

$= (1/3\ b\,)\ 1/EJ\ = 1/3\ b/EJ$

$L^{XX}_{HI} = \int_o^b (1 - 2\,x/b + x^2/b^2)\ 1/EJ\ dx = [\,x - x^2/b + 1/3\ x^3/b^2\,]_o^b\ 1/EJ$

$= (\,b - b + 1/3\ b\,)\ 1/EJ\ = 1/3\ b/EJ$

$L^{XX}_{IH} = \int_o^b (\,x^2/b^2\,)\ 1/EJ\ dx = [1/3\ x^3/b^2\,]_o^b\ 1/EJ$

$= (1/3\ b\,)\ 1/EJ\ = 1/3\ b/EJ$

$L^{XX}_{HG} = \int_o^b (1)\ 1/EJ\ dx = [\,x\,]_o^b\ 1/EJ$

$= (\,b\,)\ 1/EJ\ = b/EJ$

$L^{XX}_{GH} = \int_o^b (1)\ 1/EJ\ dx = [\,x\,]_o^b\ 1/EJ$

$= (\,b\,)\ 1/EJ\ = b/EJ$

$L^{Xo}_{GA} = \int_o^b (\,x/b - x^2/b^2\,)\ Fb\ 1/EJ\ dx = [1/2\ x^2/b - 1/3\ x^3/b^2\,]_o^b\ Fb\ 1/EJ$

$= (1/2\ b - 1/3\ b\,)\ Fb\ 1/EJ\ = 1/6\ Fb^2/EJ$

$L^{Xo}_{AG} = \int_o^b (\,x/b - x^2/b^2\,)\ Fb\ 1/EJ\ dx = [1/2\ x^2/b - 1/3\ x^3/b^2\,]_o^b\ Fb\ 1/EJ$

$= (1/2\ b - 1/3\ b\,)\ Fb\ 1/EJ\ = 1/6\ Fb^2/EJ$

$L^{Xo}_{HG} = \int_o^b (3/4 - 3/4\ x/b\,)\ Fb\ 1/EJ\ dx - 1\ \ (-1)\ \ (-1)\ \ Fb^2/EJ$

$= [3/4\ x - 3/8\ x^2/b\,]_o^b\ Fb\ 1/EJ\ - 1\ \ (-1)\ \ (-1)\ \ Fb^2/EJ$

$= (3/4\ b - 3/8\ b\,)\ Fb\ 1/EJ\ - 1\ \ (-1)\ \ (-1)\ \ Fb^2/EJ = -5/8\ \ Fb^2/EJ$

$L^{Xo}_{GH} = \int_o^b (3/4\ x/b\,)\ Fb\ 1/EJ\ dx - 1\ \ (-1)\ \ (-1)\ \ Fb^2/EJ = [3/8\ x^2/b\,]_o^b\ Fb\ 1/EJ\ - 1\ \ (-1)\ \ (-1)\ \ Fb^2/EJ$

$= (3/8\ b\,)\ Fb\ 1/EJ\ - 1\ \ (-1)\ \ (-1)\ \ Fb^2/EJ = -5/8\ \ Fb^2/EJ$

PROCEDIMENTO E RISULTATI 240095 ESΣ05.xxxx.061

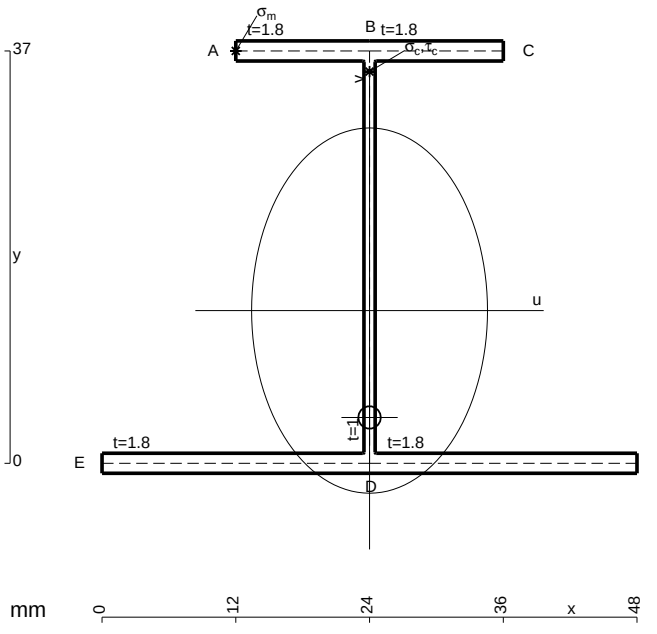

A = 166.6 mm^2
J_u = 44743. mm^4
J_v = 18662. mm^4
J_t = 152.3 mm^4
y_o = -9.592 mm
y_g = 13.7 mm
N = -907.5 N
T_y = 1210. N
M_x = -411400. Nmm
x_m = 12. mm
y_m = 37. mm
u_m = -12. mm
v_m = 23.3 mm
$\sigma_m = N/A - Mv/J_u$ = 208.8 N/mm^2
x_c = 24. mm
y_c = 37. mm
v_c = 23.3 mm
$\sigma_c = N/A - Mv/J_u$ = 208.8 N/mm^2
$\tau_c = TS^*/tJ_u$ = 27.22 N/mm^2
$\tau_g = TS^*/tJ_u$ = 27.22 N/mm^2
t_c = 1210. mm
$\sigma_o = \sqrt{\sigma^2 + 3\tau^2}$ = 214. N/mm^2

@ Adolfo Zavelani Rossi, Politecnico di Milano, vers.27.03.13 01.12.25

ESΣ05.xxxx.061

@ Adolfo Zavelani Rossi, Politecnico di Milano, vers.27.03.13 01.12.25

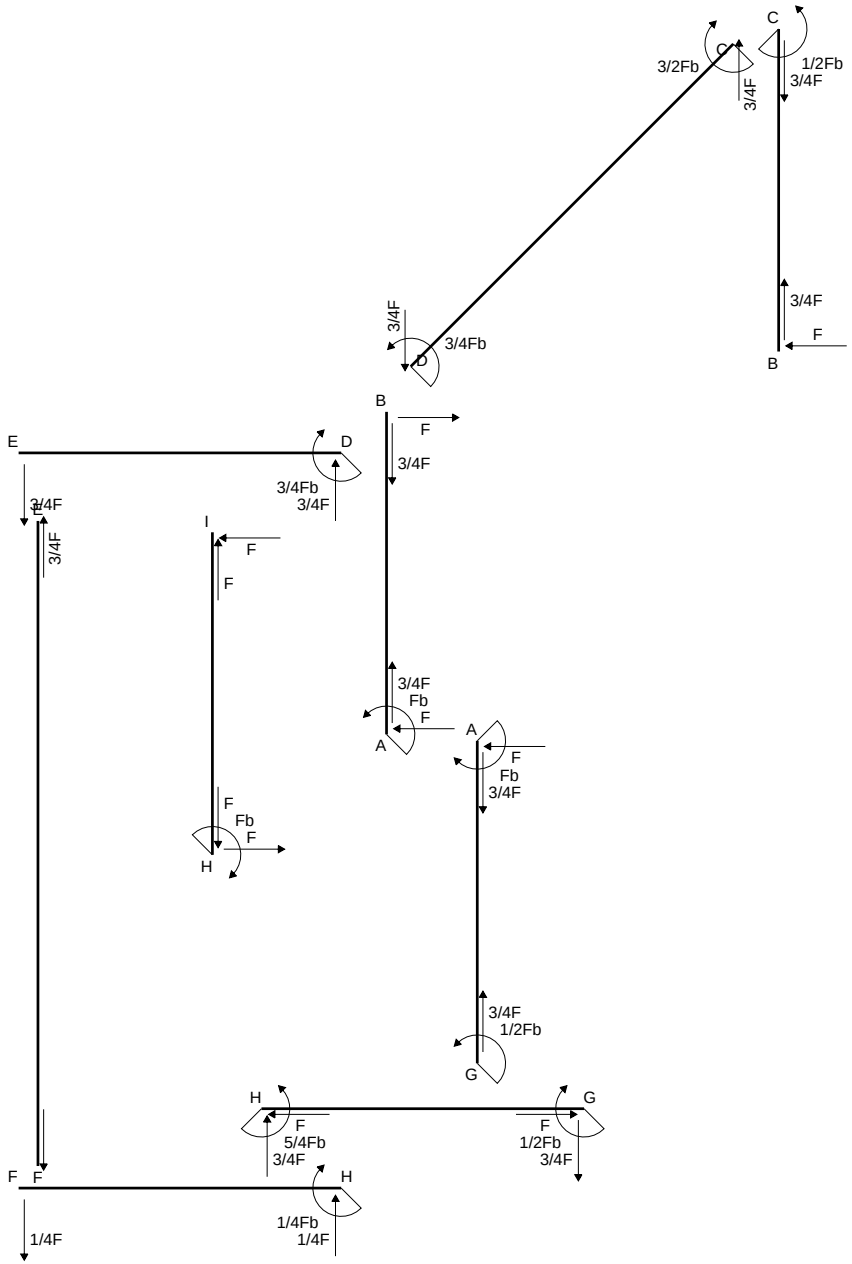
C
3/2Fb
C
1/2Fb
3/4F
3/4F
3/4F
3/4Fb
D
3/4F
F
B
B
F
3/4F
E
D
3/4Fb
3/4F
3/4F
I
F
F
3/4F
Fb
F
A
A
F
Fb
3/4F
F
Fb
F
H
3/4F
1/2Fb
G
H
F
5/4Fb
3/4F
G
F
1/2Fb
3/4F
F
F
H
1/4Fb
1/4F
1/4F

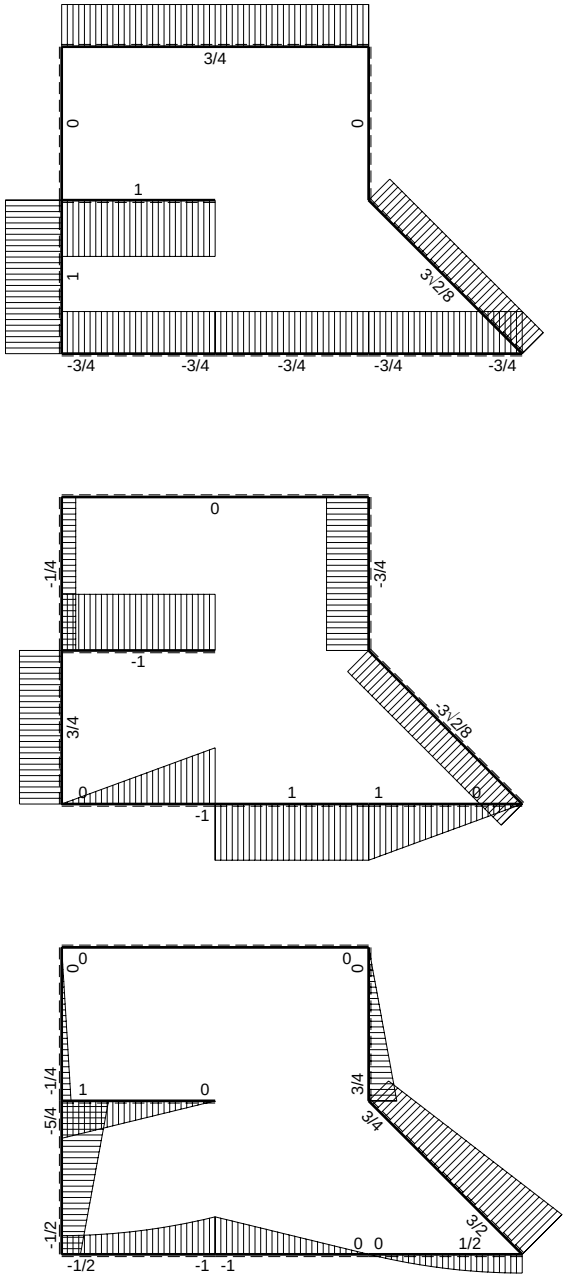
3/4
0
0
1
1
3√2/8
-3/4
-3/4
-3/4
-3/4
-3/4
F
0
-1/4
-3/4
-1
3/4
-3√2/8
0
1
1
0
-1
F
0
0
0
0
-5/4
-1/4
1
0
3/4
3/4
3/2
-1/2
0
0
1/2
-1/2
-1
-1
Fb

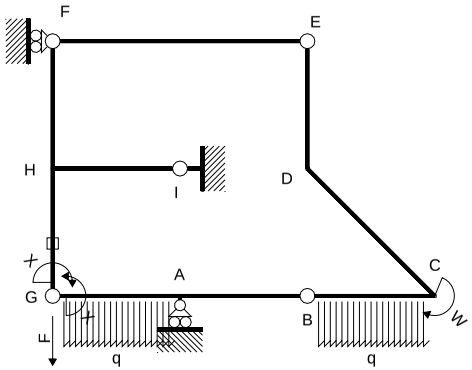

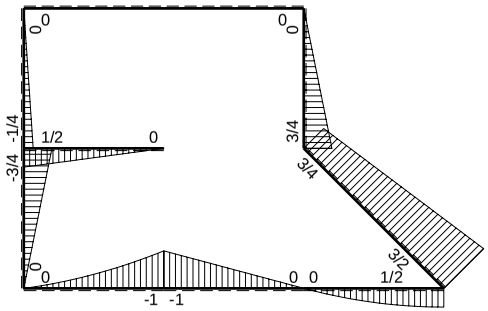

M_0 flessione da carichi assegnati

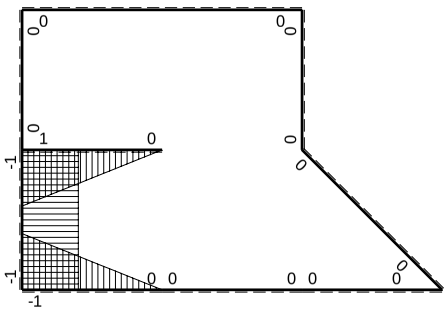

M_x flessione da iperstatica X=1

Quadro contributi PLV per iperstatica $X=W_{GA}$

→	$M_x(x)$	$M_0(x)$	M_xM_0	M_xM_x	$\int M_xM_0/EJdx$	$\int XM_xM_x/EJdx$
AB b	0	-Fb+Fx	0	0	0	0
BA b	0	Fx	0	0		
BC b	0	$Fx-1/2qx^2$	0	0	0	0
CB b	0	$-1/2Fb+1/2qx^2$	0	0		
CD √2b	0	3/2Fb-3√2/8Fx	0	0	0	0
DE b	0	3/4Fb-3/4Fx	0	0	0	0
ED b	0	-3/4Fx	0	0		
EF 2b	0	0	0	0	0	0
FE 2b	0	0	0	0		
GA b	$-1+x/b$	$-1/2Fx-1/2qx^2$	$1/2Fx-1/2qx^3/b$	$1-2x/b+x^2/b^2$	$1/8Fb^2/EJ$	$1/3Xb/EJ$
AG b	x/b	$Fb-3/2Fx+1/2qx^2$	$Fx-3/2Fx^2/b+1/2qx^3/b$	x^2/b^2		
FH b	0	-1/4Fx	0	0	0	0
HF b	0	1/4Fb-1/4Fx	0	0		
HI b	$1-x/b$	1/2Fb-1/2Fx	$1/2Fb-Fx+1/2Fx^2/b$	$1-2x/b+x^2/b^2$	$1/6Fb^2/EJ$	$1/3Xb/EJ$
IH b	$-x/b$	-1/2Fx	$1/2Fx^2/b$	x^2/b^2		
HG b	-1	-3/4Fb+3/4Fx	3/4Fb-3/4Fx	1	$3/8Fb^2/EJ$	Xb/EJ
GH b	1	3/4Fx	3/4Fx	1		
HG	elongazione asta $N_{1HG}\varepsilon_{HG}L_{HG}$				$-Fb^2/EJ$	
A	molla nodo $-V_{1A}(V_{0A}+XV_{1A})/k_A$				$-5/8Fb^2/EJ$	$1/4Xb/EJ$
	totali				$-23/24Fb^2/EJ$	$23/12Xb/EJ$
	iperstatica $X=W_{GA}$				1/2Fb	

Sviluppi di calcolo iperstatica

$L^{XX}_{GA} = \int_o^b (1 - 2\,x/b + x^2/b^2)\ 1/EJ\ dx = [\,x - x^2/b + 1/3\,x^3/b^2\,]_o^b\ 1/EJ$

$= (\,b - b + 1/3\,b\,)\ 1/EJ = 1/3\ b/EJ$

$L^{XX}_{AG} = \int_o^b (\,x^2/b^2\,)\ 1/EJ\ dx = [1/3\,x^3/b^2\,]_o^b\ 1/EJ$

$= (1/3\,b)\ 1/EJ = 1/3\ b/EJ$

$L^{XX}_{HI} = \int_o^b (1 - 2\,x/b + x^2/b^2)\ 1/EJ\ dx = [\,x - x^2/b + 1/3\,x^3/b^2\,]_o^b\ 1/EJ$

$= (\,b - b + 1/3\,b\,)\ 1/EJ = 1/3\ b/EJ$

$L^{XX}_{IH} = \int_o^b (\,x^2/b^2\,)\ 1/EJ\ dx = [1/3\,x^3/b^2\,]_o^b\ 1/EJ$

$= (1/3\,b)\ 1/EJ = 1/3\ b/EJ$

$L^{XX}_{HG} = \int_o^b (1)\ 1/EJ\ dx = [\,x\,]_o^b\ 1/EJ$

$= (\,b\,)\ 1/EJ = b/EJ$

$L^{XX}_{GH} = \int_o^b (1)\ 1/EJ\ dx = [\,x\,]_o^b\ 1/EJ$

$= (\,b\,)\ 1/EJ = b/EJ$

$L^{Xo}_{GA} = \int_o^b (1/2\,x/b - 1/2\,x^3/b^3)\ Fb\ 1/EJ\ dx = [1/4\,x^2/b - 1/8\,x^4/b^3\,]_o^b\ Fb\ 1/EJ$

$= (1/4\,b - 1/8\,b)\ Fb\ 1/EJ = 1/8\ Fb^2/EJ$

$L^{Xo}_{AG} = \int_o^b (\,x/b - 3/2\,x^2/b^2 + 1/2\,x^3/b^3)\ Fb\ 1/EJ\ dx = [1/2\,x^2/b - 1/2\,x^3/b^2 + 1/8\,x^4/b^3\,]_o^b\ Fb\ 1/EJ$

$= (1/2\,b - 1/2\,b + 1/8\,b)\ Fb\ 1/EJ = 1/8\ Fb^2/EJ$

$L^{Xo}_{HI} = \int_o^b (1/2 - x/b + 1/2\,x^2/b^2)\ Fb\ 1/EJ\ dx = [1/2\,x - 1/2\,x^2/b + 1/6\,x^3/b^2\,]_o^b\ Fb\ 1/EJ$

$= (1/2\,b - 1/2\,b + 1/6\,b)\ Fb\ 1/EJ = 1/6\ Fb^2/EJ$

$L^{Xo}_{IH} = \int_o^b (1/2\,x^2/b^2)\ Fb\ 1/EJ\ dx = [1/6\,x^3/b^2\,]_o^b\ Fb\ 1/EJ$

$= (1/6\,b)\ Fb\ 1/EJ = 1/6\ Fb^2/EJ$

$L^{Xo}_{HG} = \int_o^b (3/4 - 3/4\,x/b)\ Fb\ 1/EJ\ dx - 1\ \ (-1)\ \ (-1)\ \ Fb^2/EJ$

$= [3/4\,x - 3/8\,x^2/b\,]_o^b\ Fb\ 1/EJ\ - 1\ \ (-1)\ \ (-1)\ \ Fb^2/EJ$

$= (3/4\,b - 3/8\,b)\ Fb\ 1/EJ\ - 1\ \ (-1)\ \ (-1)\ \ Fb^2/EJ = -5/8\ \ Fb^2/EJ$

$L^{Xo}_{GH} = \int_o^b (3/4\,x/b)\ Fb\ 1/EJ\ dx - 1\ \ (-1)\ \ (-1)\ \ Fb^2/EJ = [3/8\,x^2/b\,]_o^b\ Fb\ 1/EJ\ - 1\ \ (-1)\ \ (-1)\ \ Fb^2/EJ$

$= (3/8\,b)\ Fb\ 1/EJ\ - 1\ \ (-1)\ \ (-1)\ \ Fb^2/EJ = -5/8\ \ Fb^2/EJ$

PROCEDIMENTO E RISULTATI 241068 ESΣ05.xxxx.062

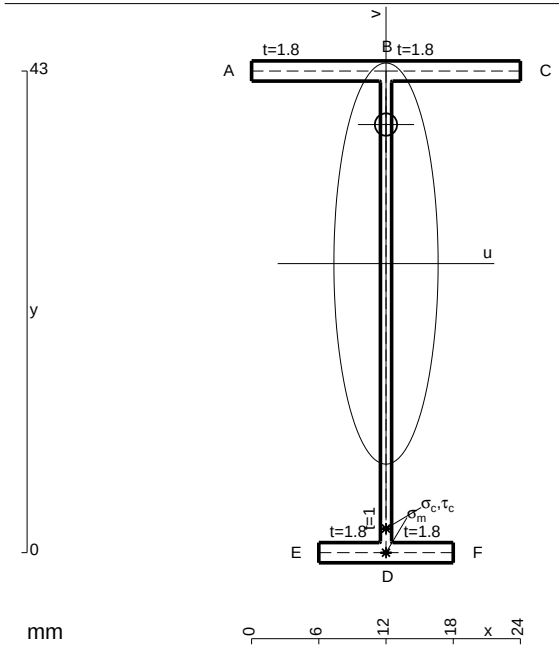

A = 107.8 mm^2
J_u = 34579. mm^4
J_v = 2333. mm^4
J_t = 84.32 mm^4
y_o = 12.41 mm
y_g = 25.81 mm
N = -487.5 N
T_y = 650. N
M_x = -286000. Nmm
x_m = 12. mm
v_m = -25.81 mm
$\sigma_m = N/A - Mv/J_u$ = -218. N/mm^2
y_c = 3. mm
u_c = -12. mm
v_c = -22.81 mm
$\sigma_c = N/A - Mv/J_u$ = -218. N/mm^2
$\tau_c = TS^*/tJ_u$ = 10.48 N/mm^2
$\tau_g = TS^*/tJ_u$ = 10.48 N/mm^2
t_c = 650. mm
$\sigma_o = \sqrt{\sigma^2 + 3\tau^2}$ = 218.7 N/mm^2

@ Adolfo Zavelani Rossi, Politecnico di Milano, vers.27.03.13 01.12.25

ESΣ05.xxxx.062

@ Adolfo Zavelani Rossi, Politecnico di Milano, vers.27.03.13 01.12.25

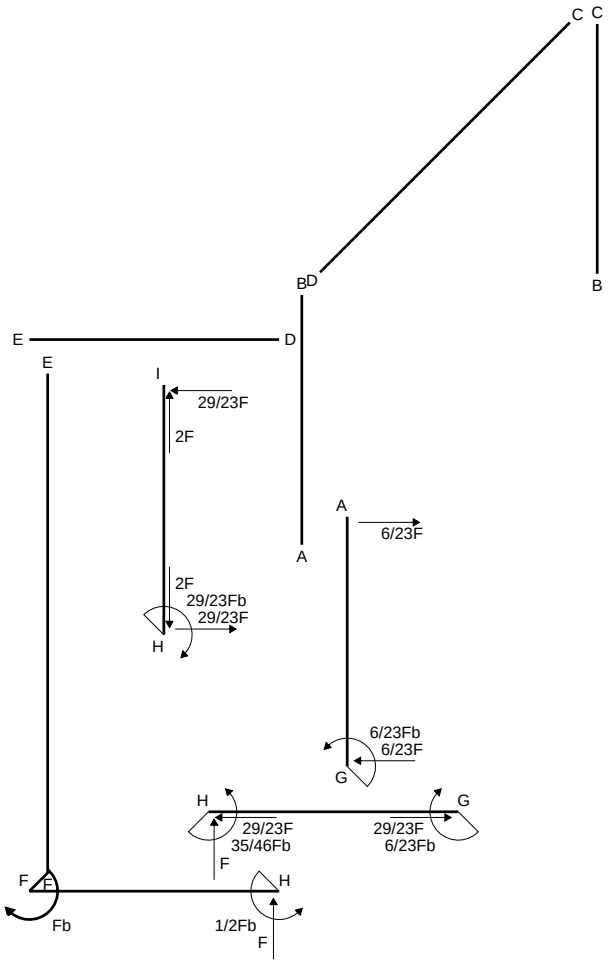
C C
B D
B
E D
E
I
29/23F
2F
A
6/23F
2F
29/23Fb
29/23F
H
6/23Fb
6/23F
G
H
G
29/23F
35/46Fb
29/23F
6/23Fb
F
F
H
Fb
1/2Fb
F

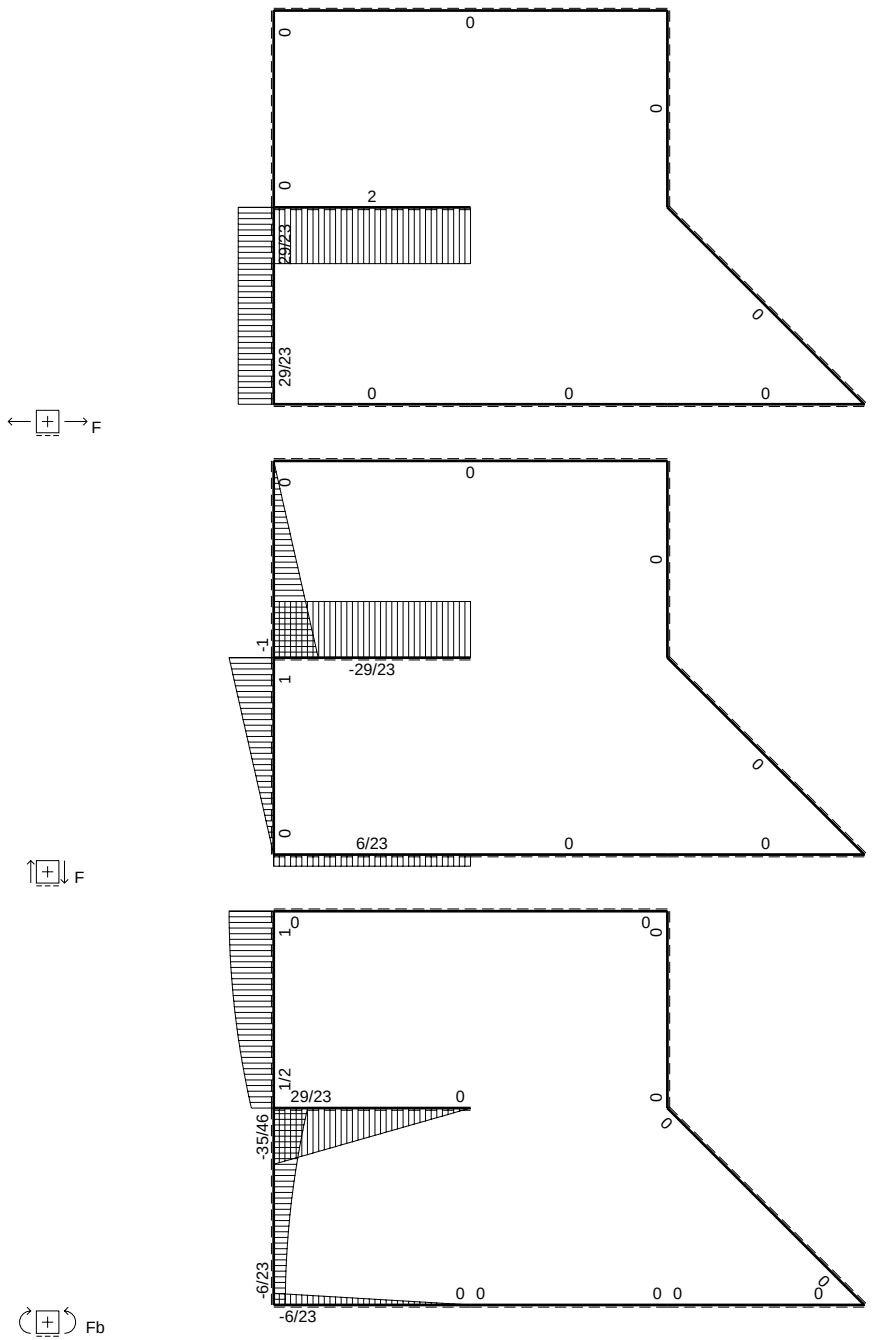
F
0
0
0
0
2
29/23
29/23
0
0
0
0
F
0
0
0
-1
-29/23
1
0
6/23
0
0
Fb
0
0
1/2
29/23
0
-35/46
0
0
-6/23
0 0
0 0
0
-6/23

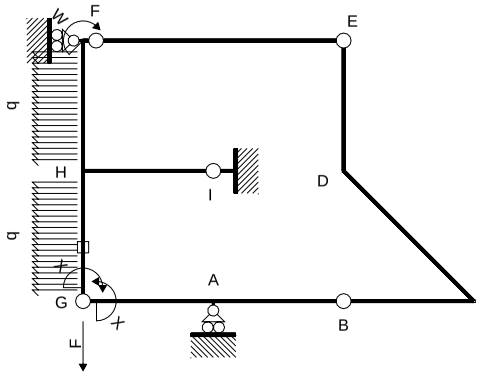

Schema di calcolo iperstatico

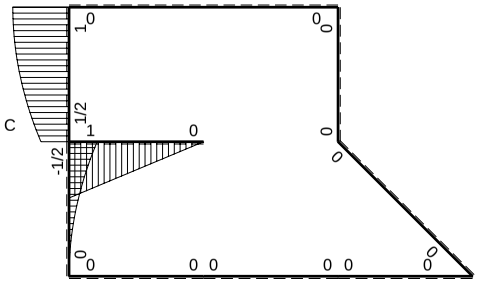

M_0 flessione da carichi assegnati

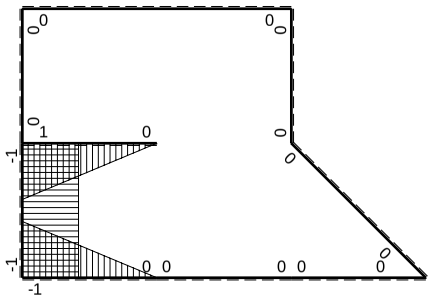

M_x flessione da iperstatica X=1

Quadro contributi PLV per iperstatica $X=W_{GA}$

→	$M_x(x)$	$M_o(x)$	M_xM_o	M_xM_x	$\int M_xM_o/EJdx$	$\int XM_xM_x/EJdx$
AB b	0	0	0	0	0	0
BA b	0	0	0	0		
BC b	0	0	0	0	0	0
CB b	0	0	0	0		
CD √2b	0	0	0	0	0	0
DE b	0	0	0	0	0	0
ED b	0	0	0	0		
EF 2b	0	0	0	0	0	0
FE 2b	0	0	0	0		
GA b	-1+x/b	0	0	$1-2x/b+x^2/b^2$	0	1/3Xb/EJ
AG b	x/b	0	0	x^2/b^2		
FH b	0	$Fb-1/2qx^2$	0	0	0	0
HF b	0	$-1/2Fb-Fx+1/2qx^2$	0	0		
HI b	1-x/b	Fb-Fx	$Fb-2Fx+Fx^2/b$	$1-2x/b+x^2/b^2$	$1/3Fb^2/EJ$	1/3Xb/EJ
IH b	-x/b	-Fx	Fx^2/b	x^2/b^2		
HG b	-1	$-1/2Fb+Fx-1/2qx^2$	$1/2Fb-Fx+1/2Fx^2/b$	1	$1/6Fb^2/EJ$	Xb/EJ
GH b	1	$1/2qx^2$	$1/2Fx^2/b$	1		
HG	elongazione asta $N_{1HG}\varepsilon_{HG}L_{HG}$				$-Fb^2/EJ$	
A	molla nodo $-V_{1A}(V_{0A}+XV_{1A})/k_A$					1/4Xb/EJ
	totali				$-1/2Fb^2/EJ$	23/12Xb/EJ
	iperstatica $X=W_{GA}$				6/23Fb	

Sviluppi di calcolo iperstatica

$L^{XX}_{GA} = \int_o^b (1 - 2\,x/b + x^2/b^2)\ 1/EJ\ dx = [\,x - x^2/b + 1/3\ x^3/b^2\,]_o^b\ 1/EJ$

$= (\,b - b + 1/3\ b\,)\ 1/EJ = 1/3\ b/EJ$

$L^{XX}_{AG} = \int_o^b (\,x^2/b^2\,)\ 1/EJ\ dx = [1/3\ x^3/b^2\,]_o^b\ 1/EJ$

$= (1/3\ b\,)\ 1/EJ = 1/3\ b/EJ$

$L^{XX}_{HI} = \int_o^b (1 - 2\,x/b + x^2/b^2)\ 1/EJ\ dx = [\,x - x^2/b + 1/3\ x^3/b^2\,]_o^b\ 1/EJ$

$= (\,b - b + 1/3\ b\,)\ 1/EJ = 1/3\ b/EJ$

$L^{XX}_{IH} = \int_o^b (\,x^2/b^2\,)\ 1/EJ\ dx = [1/3\ x^3/b^2\,]_o^b\ 1/EJ$

$= (1/3\ b\,)\ 1/EJ = 1/3\ b/EJ$

$L^{XX}_{HG} = \int_o^b (1)\ 1/EJ\ dx = [\,x\,]_o^b\ 1/EJ$

$= (\,b\,)\ 1/EJ = b/EJ$

$L^{XX}_{GH} = \int_o^b (1)\ 1/EJ\ dx = [\,x\,]_o^b\ 1/EJ$

$= (\,b\,)\ 1/EJ = b/EJ$

$L^{Xo}_{HI} = \int_o^b (1 - 2\,x/b + x^2/b^2)\ Fb\ 1/EJ\ dx = [\,x - x^2/b + 1/3\ x^3/b^2\,]_o^b\ Fb\ 1/EJ$

$= (\,b - b + 1/3\ b\,)\ Fb\ 1/EJ = 1/3\ Fb^2/EJ$

$L^{Xo}_{IH} = \int_o^b (\,x^2/b^2\,)\ Fb\ 1/EJ\ dx = [1/3\ x^3/b^2\,]_o^b\ Fb\ 1/EJ$

$= (1/3\ b\,)\ Fb\ 1/EJ = 1/3\ Fb^2/EJ$

$L^{Xo}_{HG} = \int_o^b (1/2 - x/b + 1/2\ x^2/b^2\,)\ Fb\ 1/EJ\ dx - 1\ \ (-1)\ \ (-1)\ \ Fb^2/EJ$

$= [1/2\ x - 1/2\ x^2/b + 1/6\ x^3/b^2\,]_o^b\ Fb\ 1/EJ\ -\ 1\ \ (-1)\ \ (-1)\ \ Fb^2/EJ$

$= (1/2\ b - 1/2\ b + 1/6\ b\,)\ Fb\ 1/EJ\ -\ 1\ \ (-1)\ \ (-1)\ \ Fb^2/EJ = -5/6\ \ Fb^2/EJ$

$L^{Xo}_{GH} = \int_o^b (1/2\ x^2/b^2\,)\ Fb\ 1/EJ\ dx - 1\ \ (-1)\ \ (-1)\ \ Fb^2/EJ = [1/6\ x^3/b^2\,]_o^b\ Fb\ 1/EJ\ -\ 1\ \ (-1)\ \ (-1)\ \ Fb^2/EJ$

$= (1/6\ b\,)\ Fb\ 1/EJ\ -\ 1\ \ (-1)\ \ (-1)\ \ Fb^2/EJ = -5/6\ \ Fb^2/EJ$

PROCEDIMENTO E RISULTATI 955133 ESΣ05.xxxx.063

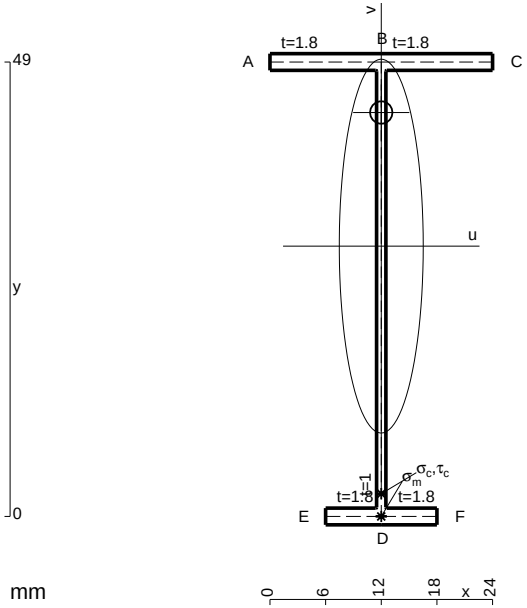

A = 113.8 mm^2
J_u = 46239. mm^4
J_v = 2333. mm^4
J_t = 86.32 mm^4
y_o = 14.41 mm
y_g = 29.15 mm
T_y = -1350. N
M_x = 364500. Nmm
x_m = 12. mm
v_m = -29.15 mm
$\sigma_m = -Mv/J_u$ = 229.8 N/mm^2
y_c = 3. mm
u_c = -12. mm
v_c = -26.15 mm
$\sigma_c = -Mv/J_u$ = 229.8 N/mm^2
$\tau_c = TS^*/tJ_u$ = 18.38 N/mm^2
$\tau_g = TS^*/tJ_u$ = 18.38 N/mm^2
t_c = 1350. mm
$\sigma_o = \sqrt{\sigma^2 + 3\tau^2}$ = 232. N/mm^2

@ Adolfo Zavelani Rossi, Politecnico di Milano, vers.27.03.13 01.12.25

ESΣ05.xxxx.063

@ Adolfo Zavelani Rossi, Politecnico di Milano, vers.27.03.13 01.12.25

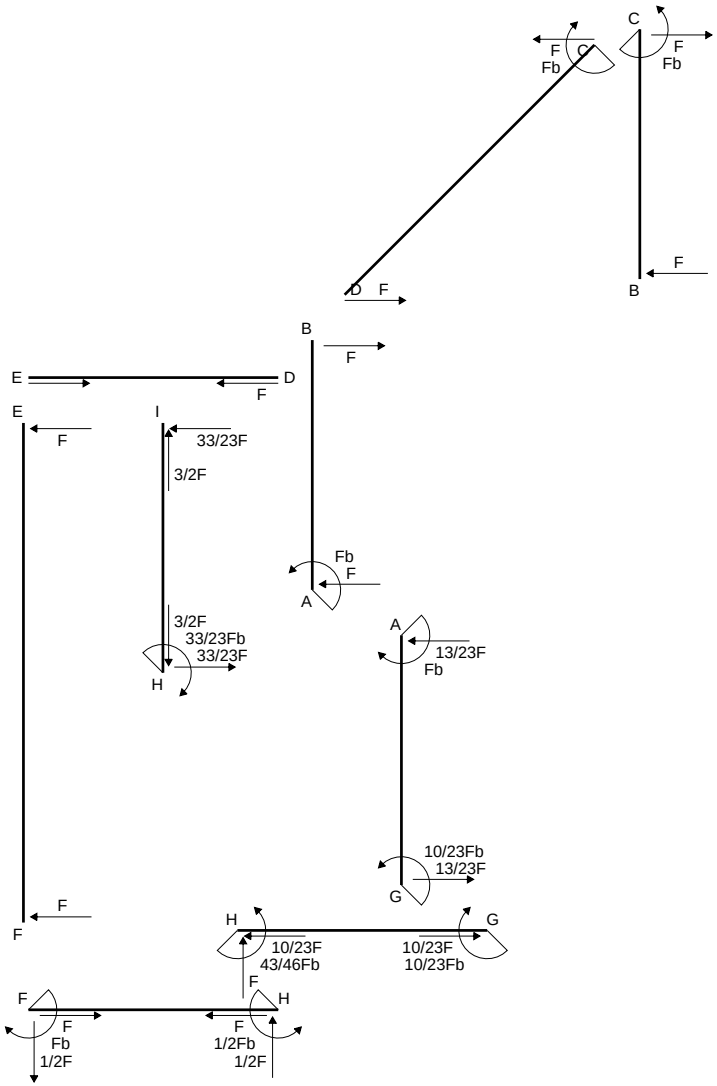
C
F
Fb
C
F
Fb
D
F
B
F
B
F
E
D
F
E
F
I
33/23F
3/2F
Fb
F
A
3/2F
33/23Fb
33/23F
H
A
13/23F
Fb
10/23Fb
13/23F
G
F
F
H
G
10/23F
43/46Fb
10/23F
10/23Fb
F
F
H
F
Fb
1/2F
F
1/2Fb
1/2F

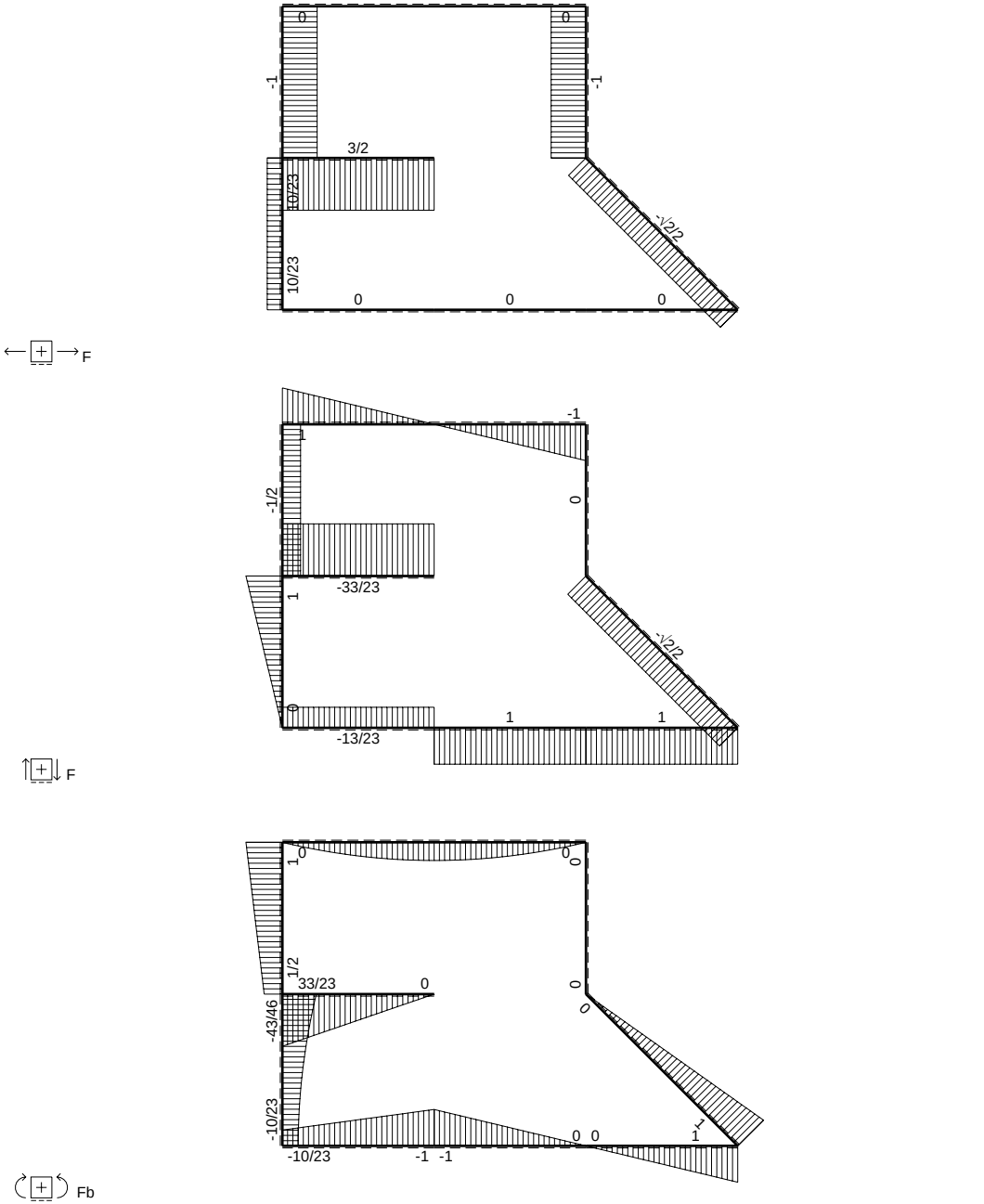
F
0
0
-1
-1
3/2
10/23
-√2/2
10/23
0
0
0
F
-1
1
-1/2
0
-33/23
1
-√2/2
0
1
1
-13/23
F
1
0
0
1/2
33/23
0
-43/46
0
0
-10/23
1
0 0
1
-10/23
-1 -1
Fb

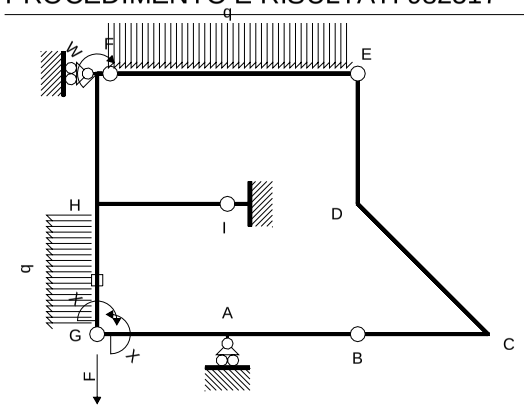

Schema di calcolo iperstatico

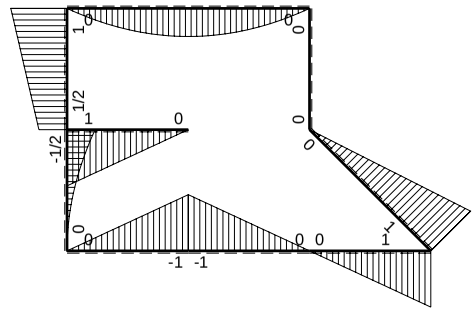

M_0 flessione da carichi assegnati

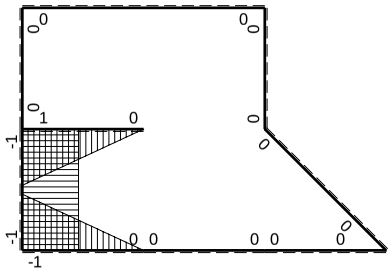

M_x flessione da iperstatica X=1

Quadro contributi PLV per iperstatica $X=W_{GA}$

→	$M_x(x)$	$M_o(x)$	M_xM_o	M_xM_x	$\int M_xM_o/EJdx$	$\int XM_xM_x/EJdx$
AB b	0	-Fb+Fx	0	0	0	0
BA b	0	Fx	0	0		
BC b	0	Fx	0	0	0	0
CB b	0	-Fb+Fx	0	0		
CD √2b	0	Fb-√2/2Fx	0	0	0	0
DE b	0	0	0	0	0	0
ED b	0	0	0	0		
EF 2b	0	$-Fx+1/2qx^2$	0	0	0	0
FE 2b	0	$Fx-1/2qx^2$	0	0		
GA b	-1+x/b	-Fx	$Fx-Fx^2/b$	$1-2x/b+x^2/b^2$	$1/6Fb^2/EJ$	1/3Xb/EJ
AG b	x/b	Fb-Fx	$Fx-Fx^2/b$	x^2/b^2		
FH b	0	Fb-1/2Fx	0	0	0	0
HF b	0	-1/2Fb-1/2Fx	0	0		
HI b	1-x/b	Fb-Fx	$Fb-2Fx+Fx^2/b$	$1-2x/b+x^2/b^2$	$1/3Fb^2/EJ$	1/3Xb/EJ
IH b	-x/b	-Fx	Fx^2/b	x^2/b^2		
HG b	-1	$-1/2Fb+Fx-1/2qx^2$	$1/2Fb-Fx+1/2Fx^2/b$	1	$1/6Fb^2/EJ$	Xb/EJ
GH b	1	$1/2qx^2$	$1/2Fx^2/b$	1		
HG	elongazione asta $N_{1HG}\varepsilon_{HG}L_{HG}$				$-Fb^2/EJ$	
A	molla nodo $-V_{1A}(V_{0A}+XV_{1A})/k_A$				$-1/2Fb^2/EJ$	1/4Xb/EJ
	totali				$-5/6Fb^2/EJ$	23/12Xb/EJ
	iperstatica $X=W_{GA}$				10/23Fb	

Sviluppi di calcolo iperstatica

$L^{XX}_{GA} = \int_o^b (1 - 2\,x/b + x^2/b^2)\ 1/EJ\ dx = [\ x - x^2/b + 1/3\ x^3/b^2\ ]_o^b\ 1/EJ$

$= (\ b - b + 1/3\ b\ )\ 1/EJ\ = 1/3\ b/EJ$

$L^{XX}_{AG} = \int_o^b (\ x^2/b^2\ )\ 1/EJ\ dx = [1/3\ x^3/b^2\ ]_o^b\ 1/EJ$

$= (1/3\ b\ )\ 1/EJ\ = 1/3\ b/EJ$

$L^{XX}_{HI} = \int_o^b (1 - 2\,x/b + x^2/b^2)\ 1/EJ\ dx = [\ x - x^2/b + 1/3\ x^3/b^2\ ]_o^b\ 1/EJ$

$= (\ b - b + 1/3\ b\ )\ 1/EJ\ = 1/3\ b/EJ$

$L^{XX}_{IH} = \int_o^b (\ x^2/b^2\ )\ 1/EJ\ dx = [1/3\ x^3/b^2\ ]_o^b\ 1/EJ$

$= (1/3\ b\ )\ 1/EJ\ = 1/3\ b/EJ$

$L^{XX}_{HG} = \int_o^b (1)\ 1/EJ\ dx = [\ x\ ]_o^b\ 1/EJ$

$= (\ b\ )\ 1/EJ\ =\ b/EJ$

$L^{XX}_{GH} = \int_o^b (1)\ 1/EJ\ dx = [\ x\ ]_o^b\ 1/EJ$

$= (\ b\ )\ 1/EJ\ =\ b/EJ$

$L^{Xo}_{GA} = \int_o^b (\ x/b - x^2/b^2\ )\ Fb\ 1/EJ\ dx = [1/2\ x^2/b - 1/3\ x^3/b^2\ ]_o^b\ Fb\ 1/EJ$

$= (1/2\ b - 1/3\ b\ )\ Fb\ 1/EJ\ = 1/6\ Fb^2/EJ$

$L^{Xo}_{AG} = \int_o^b (\ x/b - x^2/b^2\ )\ Fb\ 1/EJ\ dx = [1/2\ x^2/b - 1/3\ x^3/b^2\ ]_o^b\ Fb\ 1/EJ$

$= (1/2\ b - 1/3\ b\ )\ Fb\ 1/EJ\ = 1/6\ Fb^2/EJ$

$L^{Xo}_{HI} = \int_o^b (1 - 2\,x/b + x^2/b^2)\ Fb\ 1/EJ\ dx = [\ x - x^2/b + 1/3\ x^3/b^2\ ]_o^b\ Fb\ 1/EJ$

$= (\ b - b + 1/3\ b\ )\ Fb\ 1/EJ\ = 1/3\ Fb^2/EJ$

$L^{Xo}_{IH} = \int_o^b (\ x^2/b^2\ )\ Fb\ 1/EJ\ dx = [1/3\ x^3/b^2\ ]_o^b\ Fb\ 1/EJ$

$= (1/3\ b\ )\ Fb\ 1/EJ\ = 1/3\ Fb^2/EJ$

$L^{Xo}_{HG} = \int_o^b (1/2 - x/b + 1/2\ x^2/b^2\ )\ Fb\ 1/EJ\ dx - 1\ \ (-1)\ \ (-1)\ \ Fb^2/EJ$

$= [1/2\ x - 1/2\ x^2/b + 1/6\ x^3/b^2\ ]_o^b\ Fb\ 1/EJ\ - 1\ \ (-1)\ \ (-1)\ \ Fb^2/EJ$

$= (1/2\ b - 1/2\ b + 1/6\ b\ )\ Fb\ 1/EJ\ - 1\ \ (-1)\ \ (-1)\ \ Fb^2/EJ = -5/6\ \ Fb^2/EJ$

$L^{Xo}_{GH} = \int_o^b (1/2\ x^2/b^2\ )\ Fb\ 1/EJ\ dx - 1\ \ (-1)\ \ (-1)\ \ Fb^2/EJ = [1/6\ x^3/b^2\ ]_o^b\ Fb\ 1/EJ\ - 1\ \ (-1)\ \ (-1)\ \ Fb^2/EJ$

$= (1/6\ b\ )\ Fb\ 1/EJ\ - 1\ \ (-1)\ \ (-1)\ \ Fb^2/EJ = -5/6\ \ Fb^2/EJ$

PROCEDIMENTO E RISULTATI 982517 ESΣ05.xxxx.064

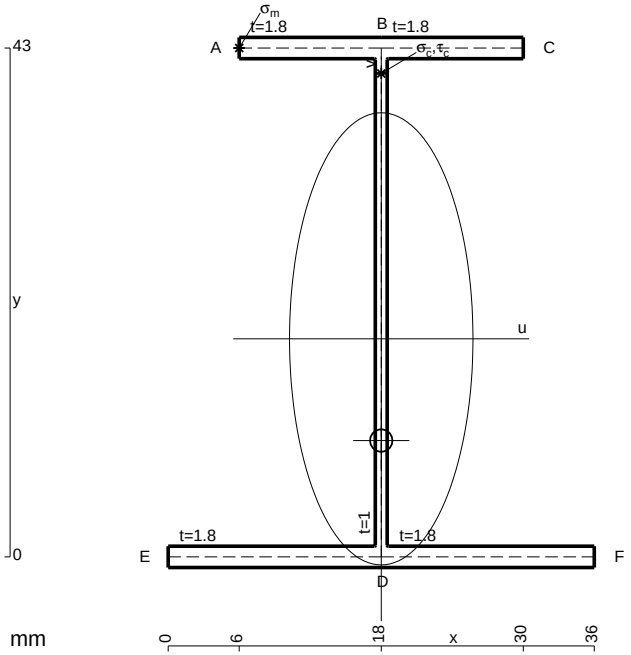

A = 151. mm^2
J_u = 55120. mm^4
J_v = 9072. mm^4
J_t = 131. mm^4
y_o = -8.596 mm
y_g = 18.42 mm
T_y = 1050. N
M_x = -535500. Nmm
x_m = 6. mm
y_m = 43. mm
u_m = -12. mm
v_m = 24.58 mm
$\sigma_m = -Mv/J_u$ = 238.8 N/mm^2
x_c = 18. mm
y_c = 43. mm
v_c = 24.58 mm
$\sigma_c = -Mv/J_u$ = 238.8 N/mm^2
$\tau_c = TS^*/tJ_u$ = 20.22 N/mm^2
$\tau_g = TS^*/tJ_u$ = 20.22 N/mm^2
t_c = 1050. mm
$\sigma_o = \sqrt{\sigma^2 + 3\tau^2}$ = 241.3 N/mm^2

@ Adolfo Zavelani Rossi, Politecnico di Milano, vers.27.03.13 01.12.25

ESΣ05.xxxx.064

@ Adolfo Zavelani Rossi, Politecnico di Milano, vers.27.03.13 01.12.25

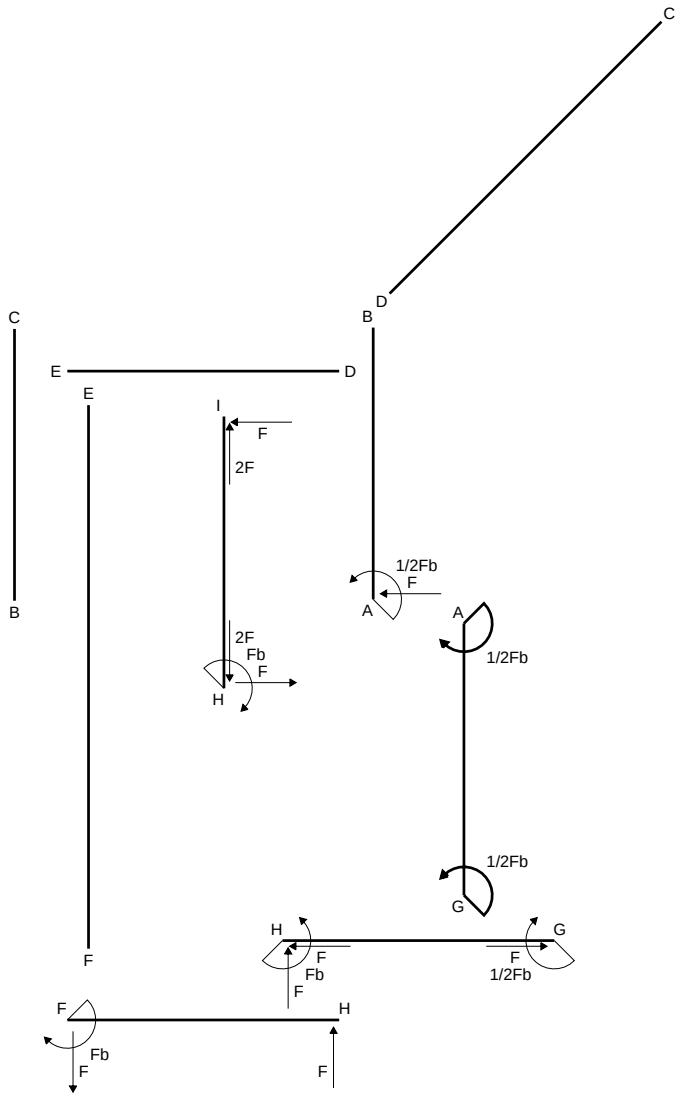
C
B
D
C
B
E
D
E
I
F
2F
1/2Fb
F
A
A
1/2Fb
2F
Fb
F
H
1/2Fb
G
H
G
F
F
Fb
F
F
1/2Fb
F
H
F
Fb
F
F

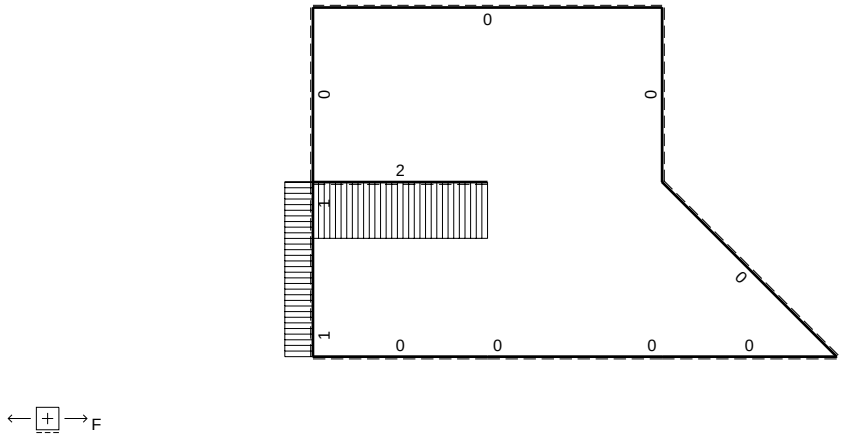
0
0
0
2
1
0
1
0
0
0
0

F

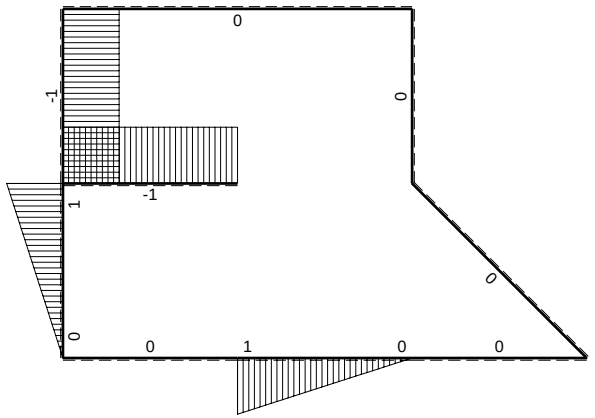
0
-1
0
-1
1
0
0
1
0
0

F

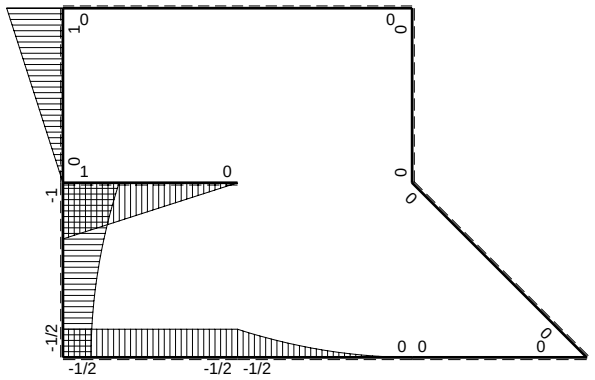
1
0
0
0
1
0
0
-1
0
0
-1/2
0 0
0
-1/2
-1/2
-1/2

Fb

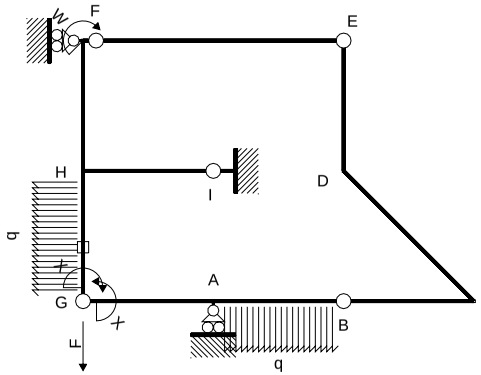

Schema di calcolo iperstatico

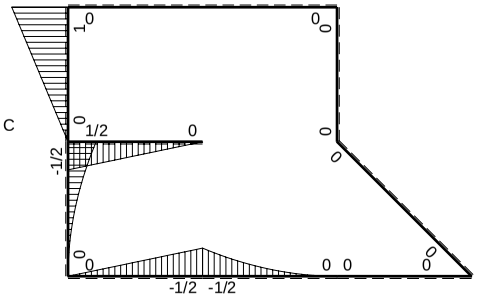

M_0 flessione da carichi assegnati

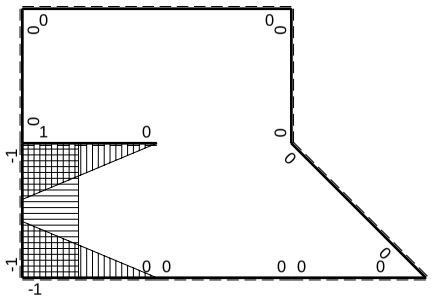

M_x flessione da iperstatica X=1

Quadro contributi PLV per iperstatica $X=W_{GA}$

→	$M_x(x)$	$M_o(x)$	M_xM_o	M_xM_x	$\int M_xM_o/EJdx$	$\int XM_xM_x/EJdx$
AB b	0	$-1/2Fb+Fx-1/2qx^2$	0	0	0	0
BA b	0	$1/2qx^2$	0	0		
BC b	0	0	0	0	0	0
CB b	0	0	0	0		
CD $\sqrt{2}$b	0	0	0	0	0	0
DE b	0	0	0	0	0	0
ED b	0	0	0	0		
EF 2b	0	0	0	0	0	0
FE 2b	0	0	0	0		
GA b	-1+x/b	$-1/2Fx$	$1/2Fx-1/2Fx^2/b$	$1-2x/b+x^2/b^2$	$1/12Fb^2/EJ$	$1/3Xb/EJ$
AG b	x/b	$1/2Fb-1/2Fx$	$1/2Fx-1/2Fx^2/b$	x^2/b^2		
FH b	0	Fb-Fx	0	0	0	0
HF b	0	-Fx	0	0		
HI b	1-x/b	$1/2Fb-1/2Fx$	$1/2Fb-Fx+1/2Fx^2/b$	$1-2x/b+x^2/b^2$	$1/6Fb^2/EJ$	$1/3Xb/EJ$
IH b	-x/b	$-1/2Fx$	$1/2Fx^2/b$	x^2/b^2		
HG b	-1	$-1/2Fb+Fx-1/2qx^2$	$1/2Fb-Fx+1/2Fx^2/b$	1	$1/6Fb^2/EJ$	Xb/EJ
GH b	1	$1/2qx^2$	$1/2Fx^2/b$	1		
HG	elongazione asta $N_{1HG}\varepsilon_{HG}L_{HG}$				$-Fb^2/EJ$	
A	molla nodo $-V_{1A}(V_{0A}+XV_{1A})/k_A$				$-3/8Fb^2/EJ$	$1/4Xb/EJ$
	totali				$-23/24Fb^2/EJ$	$23/12Xb/EJ$
	iperstatica $X=W_{GA}$				1/2Fb	

Sviluppi di calcolo iperstatica

$L^{XX}_{GA} = \int_o^b (1 - 2\,x/b + x^2/b^2)\ 1/EJ\ dx = [\,x - x^2/b + 1/3\,x^3/b^2\,]_o^b\ 1/EJ$

$= (\,b - b + 1/3\,b\,)\ 1/EJ = 1/3\ b/EJ$

$L^{XX}_{AG} = \int_o^b (\,x^2/b^2\,)\ 1/EJ\ dx = [1/3\,x^3/b^2\,]_o^b\ 1/EJ$

$= (1/3\,b\,)\ 1/EJ = 1/3\ b/EJ$

$L^{XX}_{HI} = \int_o^b (1 - 2\,x/b + x^2/b^2)\ 1/EJ\ dx = [\,x - x^2/b + 1/3\,x^3/b^2\,]_o^b\ 1/EJ$

$= (\,b - b + 1/3\,b\,)\ 1/EJ = 1/3\ b/EJ$

$L^{XX}_{IH} = \int_o^b (\,x^2/b^2\,)\ 1/EJ\ dx = [1/3\,x^3/b^2\,]_o^b\ 1/EJ$

$= (1/3\,b\,)\ 1/EJ = 1/3\ b/EJ$

$L^{XX}_{HG} = \int_o^b (1)\ 1/EJ\ dx = [\,x\,]_o^b\ 1/EJ$

$= (\,b\,)\ 1/EJ = b/EJ$

$L^{XX}_{GH} = \int_o^b (1)\ 1/EJ\ dx = [\,x\,]_o^b\ 1/EJ$

$= (\,b\,)\ 1/EJ = b/EJ$

$L^{Xo}_{GA} = \int_o^b (1/2\,x/b - 1/2\,x^2/b^2)\ Fb\ 1/EJ\ dx = [1/4\,x^2/b - 1/6\,x^3/b^2\,]_o^b\ Fb\ 1/EJ$

$= (1/4\,b - 1/6\,b\,)\ Fb\ 1/EJ = 1/12\ Fb^2/EJ$

$L^{Xo}_{AG} = \int_o^b (1/2\,x/b - 1/2\,x^2/b^2)\ Fb\ 1/EJ\ dx = [1/4\,x^2/b - 1/6\,x^3/b^2\,]_o^b\ Fb\ 1/EJ$

$= (1/4\,b - 1/6\,b\,)\ Fb\ 1/EJ = 1/12\ Fb^2/EJ$

$L^{Xo}_{HI} = \int_o^b (1/2 - x/b + 1/2\,x^2/b^2)\ Fb\ 1/EJ\ dx = [1/2\,x - 1/2\,x^2/b + 1/6\,x^3/b^2\,]_o^b\ Fb\ 1/EJ$

$= (1/2\,b - 1/2\,b + 1/6\,b\,)\ Fb\ 1/EJ = 1/6\ Fb^2/EJ$

$L^{Xo}_{IH} = \int_o^b (1/2\,x^2/b^2\,)\ Fb\ 1/EJ\ dx = [1/6\,x^3/b^2\,]_o^b\ Fb\ 1/EJ$

$= (1/6\,b\,)\ Fb\ 1/EJ = 1/6\ Fb^2/EJ$

$L^{Xo}_{HG} = \int_o^b (1/2 - x/b + 1/2\,x^2/b^2\,)\ Fb\ 1/EJ\ dx - 1\ \ (-1)\ \ (-1)\ \ Fb^2/EJ$

$= [1/2\,x - 1/2\,x^2/b + 1/6\,x^3/b^2\,]_o^b\ Fb\ 1/EJ\ -\ 1\ \ (-1)\ \ (-1)\ \ Fb^2/EJ$

$= (1/2\,b - 1/2\,b + 1/6\,b\,)\ Fb\ 1/EJ\ -\ 1\ \ (-1)\ \ (-1)\ \ Fb^2/EJ = -5/6\ \ Fb^2/EJ$

$L^{Xo}_{GH} = \int_o^b (1/2\,x^2/b^2\,)\ Fb\ 1/EJ\ dx - 1\ \ (-1)\ \ (-1)\ \ Fb^2/EJ = [1/6\,x^3/b^2\,]_o^b\ Fb\ 1/EJ\ -\ 1\ \ (-1)\ \ (-1)\ \ Fb^2/EJ$

$= (1/6\,b\,)\ Fb\ 1/EJ\ -\ 1\ \ (-1)\ \ (-1)\ \ Fb^2/EJ = -5/6\ \ Fb^2/EJ$

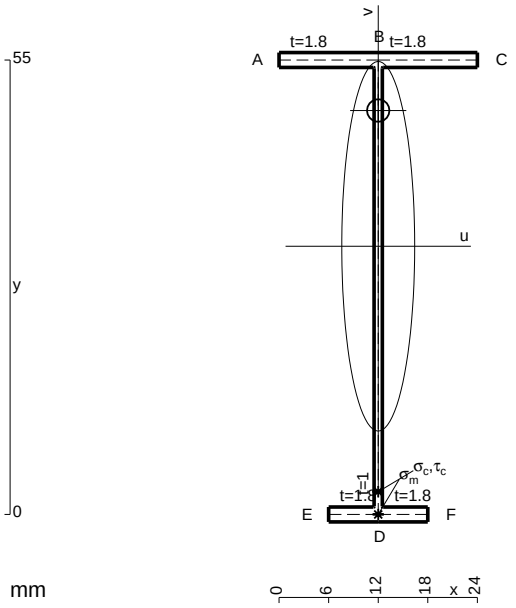

A = 119.8 mm^2
J_u = 59924. mm^4
J_v = 2333. mm^4
J_t = 88.32 mm^4
y_o = 16.43 mm
y_g = 32.46 mm
T_y = -520. N
M_x = 364000. Nmm
x_m = 12. mm
v_m = -32.46 mm
$\sigma_m = -Mv/J_u$ = 197.2 N/mm^2
y_c = 3. mm
u_c = -12. mm
v_c = -29.46 mm
$\sigma_c = -Mv/J_u$ = 197.2 N/mm^2
$\tau_c = TS^*/tJ_u$ = 6.084 N/mm^2
$\tau_g = TS^*/tJ_u$ = 6.084 N/mm^2
t_c = 520. mm
$\sigma_o = \sqrt{\sigma^2 + 3\tau^2}$ = 197.4 N/mm^2

ESΣ05.xxxx.065

@ Adolfo Zavelani Rossi, Politecnico di Milano, vers.27.03.13 01.12.25

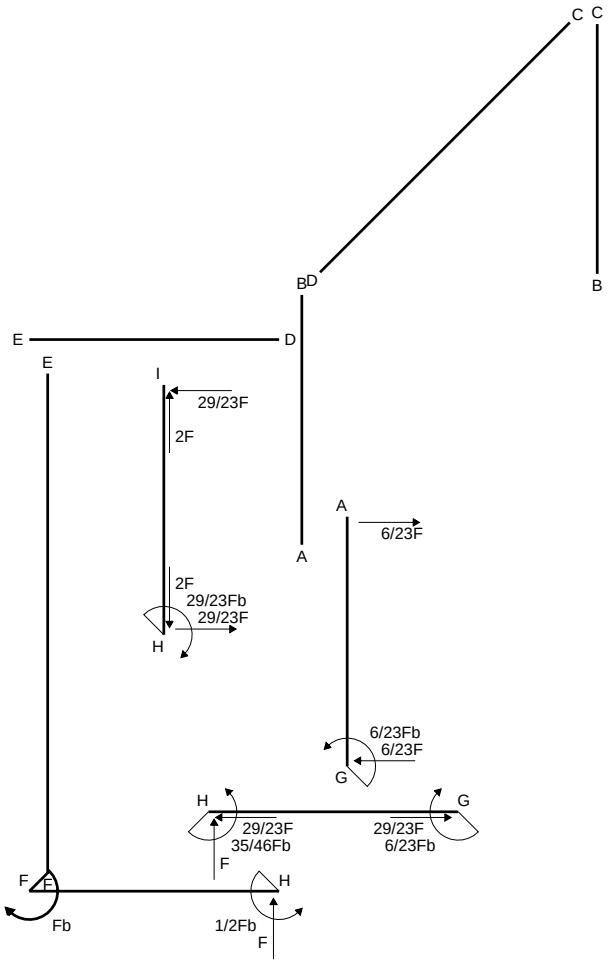
C C
B D
B
E
D
E
I
29/23F
2F
A
6/23F
A
2F
29/23Fb
29/23F
H
6/23Fb
6/23F
G
H
G
29/23F
35/46Fb
29/23F
6/23Fb
F
F F
H
Fb
1/2Fb
F

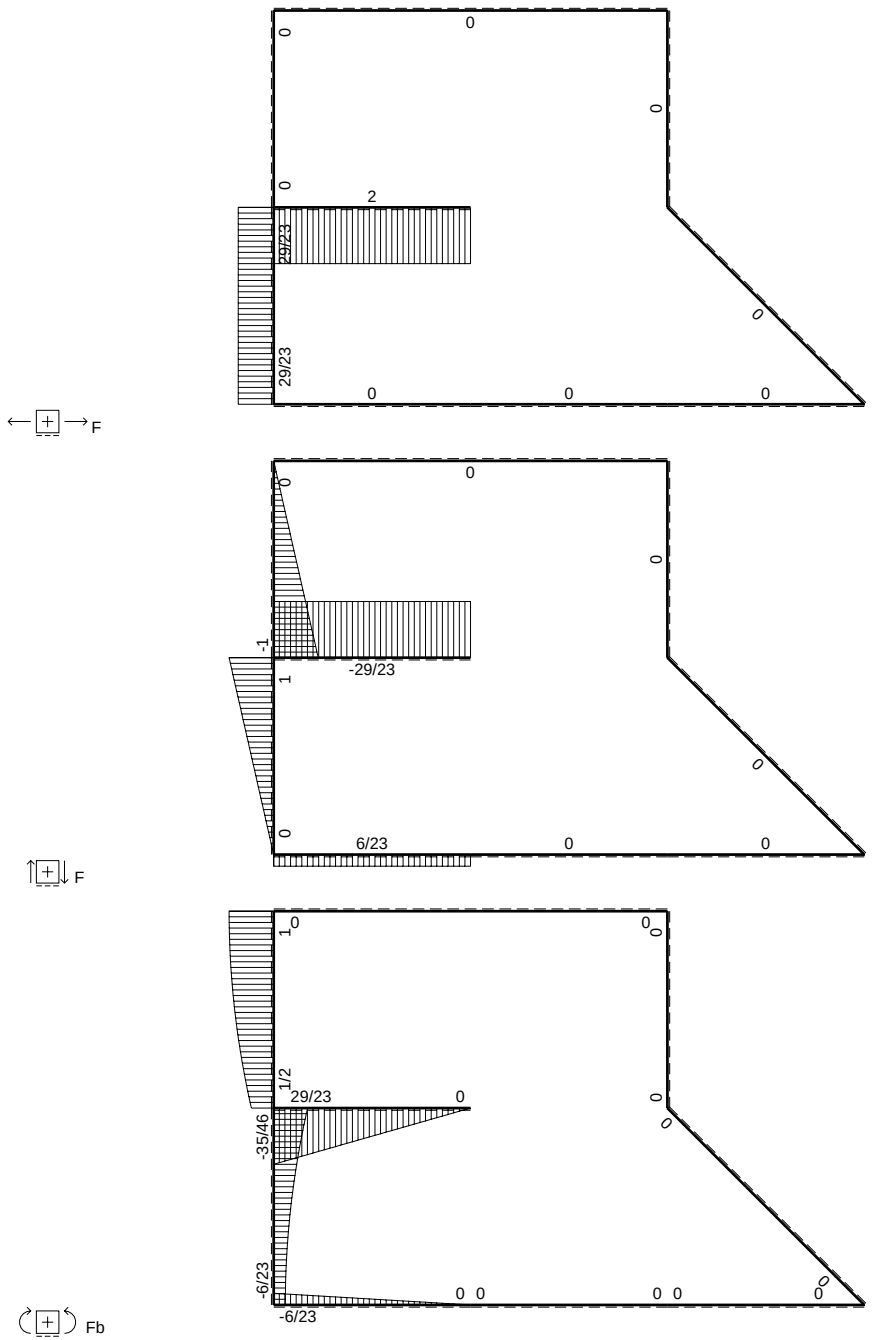
0
0
0
0
2
29/23
29/23
0
0
0
0
F
0
0
0
-1
-29/23
1
0
0
6/23
0
0
F
0
0
1
0
1/2
29/23
0
0
0
-35/46
-6/23
0 0
0 0
0
-6/23
Fb

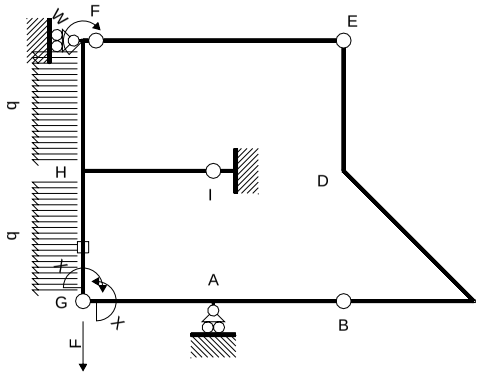

Schema di calcolo iperstatico

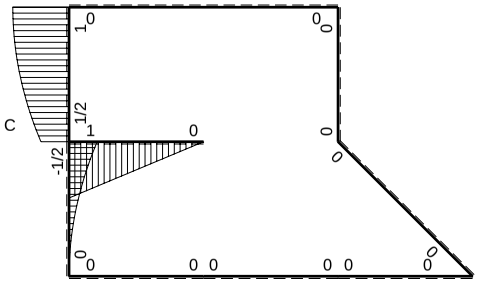

M_0 flessione da carichi assegnati

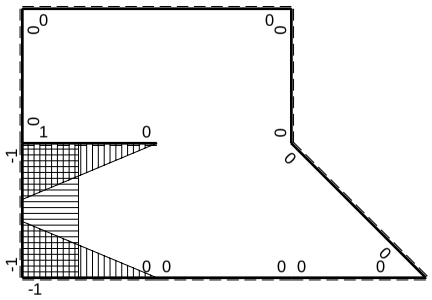

M_x flessione da iperstatica X=1

Quadro contributi PLV per iperstatica $X=W_{GA}$

→	$M_x(x)$	$M_o(x)$	M_xM_o	M_xM_x	$\int M_xM_o/EJdx$	$\int XM_xM_x/EJdx$
AB b	0	0	0	0	0	0
BA b	0	0	0	0		
BC b	0	0	0	0	0	0
CB b	0	0	0	0		
CD $\sqrt{2}$b	0	0	0	0	0	0
DE b	0	0	0	0	0	0
ED b	0	0	0	0		
EF 2b	0	0	0	0	0	0
FE 2b	0	0	0	0		
GA b	-1+x/b	0	0	$1-2x/b+x^2/b^2$	0	1/3Xb/EJ
AG b	x/b	0	0	x^2/b^2		
FH b	0	$Fb-1/2qx^2$	0	0	0	0
HF b	0	$-1/2Fb-Fx+1/2qx^2$	0	0		
HI b	1-x/b	Fb-Fx	$Fb-2Fx+Fx^2/b$	$1-2x/b+x^2/b^2$	$1/3Fb^2/EJ$	1/3Xb/EJ
IH b	-x/b	-Fx	Fx^2/b	x^2/b^2		
HG b	-1	$-1/2Fb+Fx-1/2qx^2$	$1/2Fb-Fx+1/2Fx^2/b$	1	$1/6Fb^2/EJ$	Xb/EJ
GH b	1	$1/2qx^2$	$1/2Fx^2/b$	1		
HG	elongazione asta $N_{1HG}\varepsilon_{HG}L_{HG}$				$-Fb^2/EJ$	
A	molla nodo $-V_{1A}(V_{0A}+XV_{1A})/k_A$					1/4Xb/EJ
	totali				$-1/2Fb^2/EJ$	23/12Xb/EJ
	iperstatica $X=W_{GA}$				6/23Fb	

Sviluppi di calcolo iperstatica

$L^{XX}_{GA} = \int_o^b (1 - 2\,x/b + x^2/b^2)\ 1/EJ\ dx = [\ x - x^2/b + 1/3\ x^3/b^2\ ]_o^b\ 1/EJ$

$= (\ b - b + 1/3\ b\ )\ 1/EJ\ = 1/3\ b/EJ$

$L^{XX}_{AG} = \int_o^b (\ x^2/b^2\ )\ 1/EJ\ dx = [1/3\ x^3/b^2\ ]_o^b\ 1/EJ$

$= (1/3\ b\ )\ 1/EJ\ = 1/3\ b/EJ$

$L^{XX}_{HI} = \int_o^b (1 - 2\,x/b + x^2/b^2)\ 1/EJ\ dx = [\ x - x^2/b + 1/3\ x^3/b^2\ ]_o^b\ 1/EJ$

$= (\ b - b + 1/3\ b\ )\ 1/EJ\ = 1/3\ b/EJ$

$L^{XX}_{IH} = \int_o^b (\ x^2/b^2\ )\ 1/EJ\ dx = [1/3\ x^3/b^2\ ]_o^b\ 1/EJ$

$= (1/3\ b\ )\ 1/EJ\ = 1/3\ b/EJ$

$L^{XX}_{HG} = \int_o^b (1)\ 1/EJ\ dx = [\ x\ ]_o^b\ 1/EJ$

$= (\ b\ )\ 1/EJ\ =\ b/EJ$

$L^{XX}_{GH} = \int_o^b (1)\ 1/EJ\ dx = [\ x\ ]_o^b\ 1/EJ$

$= (\ b\ )\ 1/EJ\ =\ b/EJ$

$L^{Xo}_{HI} = \int_o^b (1 - 2\,x/b + x^2/b^2)\ Fb\ 1/EJ\ dx = [\ x - x^2/b + 1/3\ x^3/b^2\ ]_o^b\ Fb\ 1/EJ$

$= (\ b - b + 1/3\ b\ )\ Fb\ 1/EJ\ = 1/3\ Fb^2/EJ$

$L^{Xo}_{IH} = \int_o^b (\ x^2/b^2\ )\ Fb\ 1/EJ\ dx = [1/3\ x^3/b^2\ ]_o^b\ Fb\ 1/EJ$

$= (1/3\ b\ )\ Fb\ 1/EJ\ = 1/3\ Fb^2/EJ$

$L^{Xo}_{HG} = \int_o^b (1/2 - x/b + 1/2\ x^2/b^2)\ Fb\ 1/EJ\ dx - 1\ \ (-1)\ \ (-1)\ \ Fb^2/EJ$

$= [1/2\ x - 1/2\ x^2/b + 1/6\ x^3/b^2\ ]_o^b\ Fb\ 1/EJ\ -\ 1\ \ (-1)\ \ (-1)\ \ Fb^2/EJ$

$= (1/2\ b - 1/2\ b + 1/6\ b\ )\ Fb\ 1/EJ\ -\ 1\ \ (-1)\ \ (-1)\ \ Fb^2/EJ = -5/6\ \ Fb^2/EJ$

$L^{Xo}_{GH} = \int_o^b (1/2\ x^2/b^2\ )\ Fb\ 1/EJ\ dx - 1\ \ (-1)\ \ (-1)\ \ Fb^2/EJ = [1/6\ x^3/b^2\ ]_o^b\ Fb\ 1/EJ\ -\ 1\ \ (-1)\ \ (-1)\ \ Fb^2/EJ$

$= (1/6\ b\ )\ Fb\ 1/EJ\ -\ 1\ \ (-1)\ \ (-1)\ \ Fb^2/EJ = -5/6\ \ Fb^2/EJ$

PROCEDIMENTO E RISULTATI 236438 ESΣ05.xxxx.066

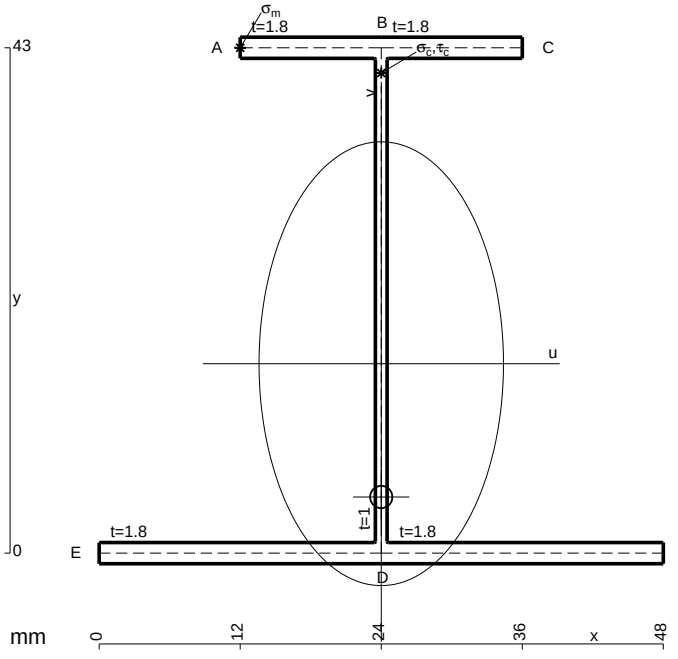

A = 172.6 mm^2
J_u = 61535. mm^4
J_v = 18662. mm^4
J_t = 154.3 mm^4
y_o = -11.34 mm
y_g = 16.12 mm
T_y = -1620. N
M_x = 477900. Nmm
x_m = 12. mm
y_m = 43. mm
u_m = -12. mm
v_m = 26.88 mm
$\sigma_m = -Mv/J_u$ = -208.8 N/mm^2
x_c = 24. mm
y_c = 43. mm
v_c = 26.88 mm
$\sigma_c = -Mv/J_u$ = -208.8 N/mm^2
$\tau_c = TS^*/tJ_u$ = 30.57 N/mm^2
$\tau_g = TS^*/tJ_u$ = 30.57 N/mm^2
t_c = 1620. mm
$\sigma_o = \sqrt{\sigma^2 + 3\tau^2}$ = 215.4 N/mm^2

@ Adolfo Zavelani Rossi, Politecnico di Milano, vers.27.03.13 01.12.25

ESΣ05.xxxx.066

@ Adolfo Zavelani Rossi, Politecnico di Milano, vers.27.03.13 01.12.25

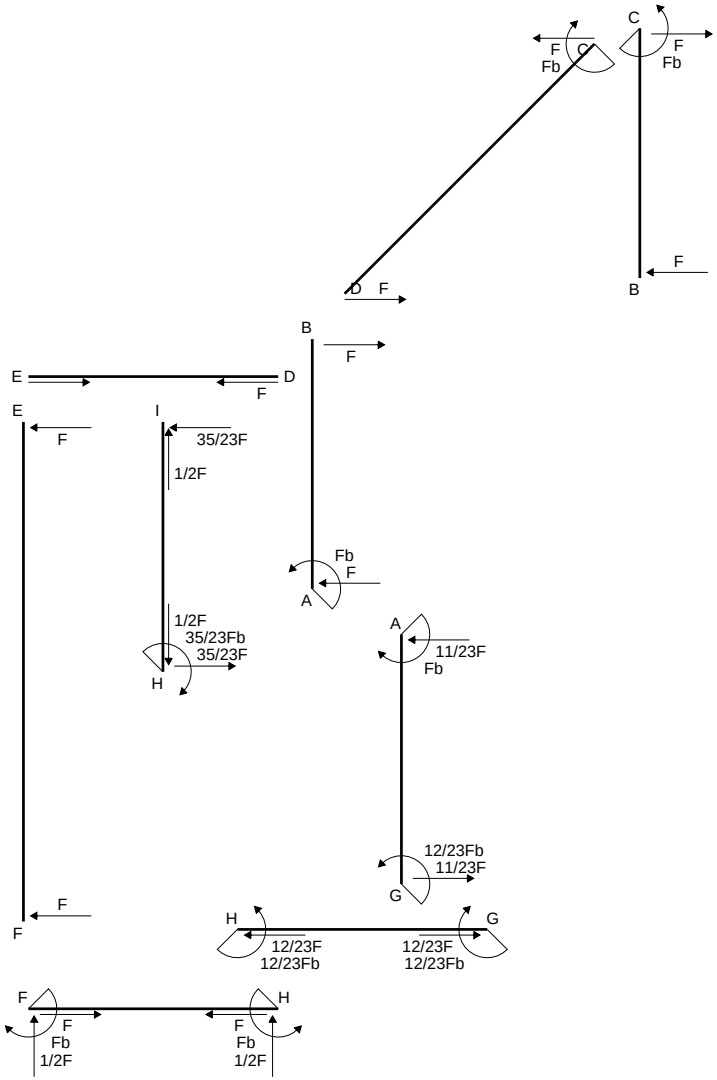
C
F
Fb
C
F
Fb
F
B
D F
B
F
E
D
F
E
F
I
35/23F
1/2F
Fb
F
A
1/2F
35/23Fb
35/23F
H
A
11/23F
Fb
12/23Fb
11/23F
G
F
F
H
G
12/23F
12/23Fb
12/23F
12/23Fb
F
H
F
Fb
1/2F
F
Fb
1/2F

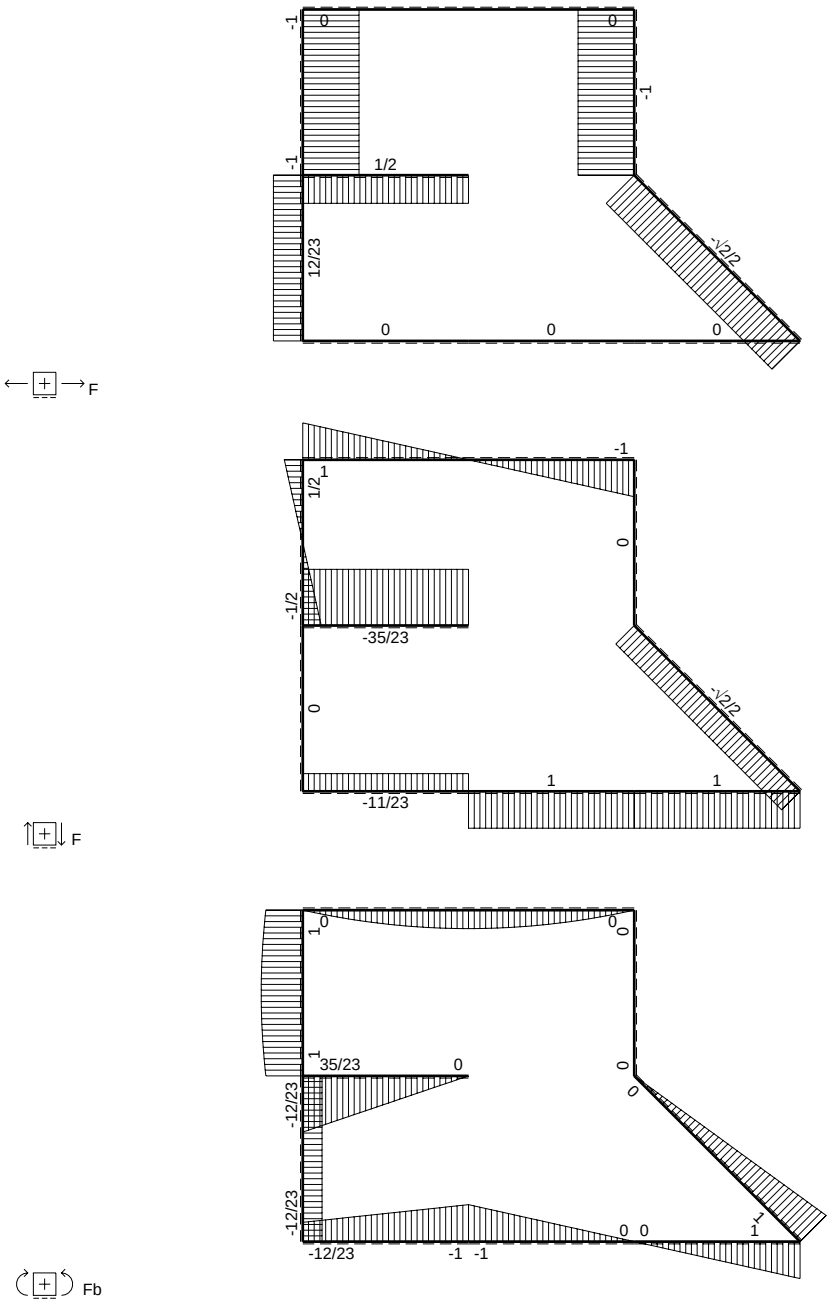
F
-1
0
0
-1
-1
1/2
12/23
-√2/2
0
0
0
F
-1
1/2
1
0
-1/2
-35/23
-√2/2
0
1
1
-11/23
F
1
0
0
1
35/23
0
-12/23
0
0
-12/23
0 0
1
-12/23
-1 -1
Fb

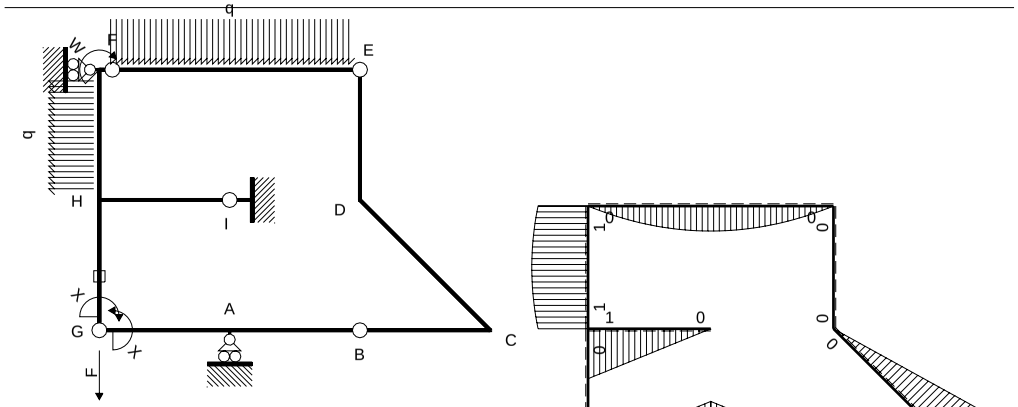

Schema di calcolo iperstatico

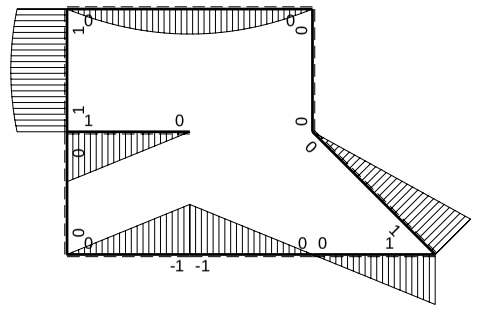

M_0 flessione da carichi assegnati

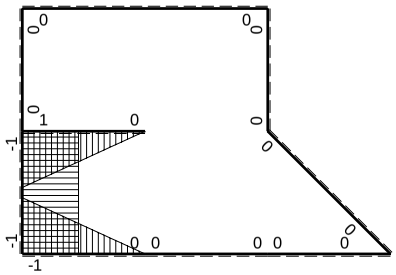

M_x flessione da iperstatica X=1

Quadro contributi PLV per iperstatica $X=W_{GA}$

→	$M_x(x)$	$M_o(x)$	M_xM_o	M_xM_x	$\int M_xM_o/EJdx$	$\int XM_xM_x/EJdx$
AB b	0	-Fb+Fx	0	0	0	0
BA b	0	Fx	0	0		
BC b	0	Fx	0	0	0	0
CB b	0	-Fb+Fx	0	0		
CD √2b	0	Fb-√2/2Fx	0	0	0	0
DE b	0	0	0	0	0	0
ED b	0	0	0	0		
EF 2b	0	$-Fx+1/2qx^2$	0	0	0	0
FE 2b	0	$Fx-1/2qx^2$	0	0		
GA b	$-1+x/b$	-Fx	$Fx-Fx^2/b$	$1-2x/b+x^2/b^2$	$1/6Fb^2/EJ$	1/3Xb/EJ
AG b	x/b	Fb-Fx	$Fx-Fx^2/b$	x^2/b^2		
FH b	0	$Fb+1/2Fx-1/2qx^2$	0	0	0	0
HF b	0	$-Fb-1/2Fx+1/2qx^2$	0	0		
HI b	1-x/b	Fb-Fx	$Fb-2Fx+Fx^2/b$	$1-2x/b+x^2/b^2$	$1/3Fb^2/EJ$	1/3Xb/EJ
IH b	-x/b	-Fx	Fx^2/b	x^2/b^2		
HG b	-1	0	0	1	0	Xb/EJ
GH b	1	0	0	1		
HG	elongazione asta $N_{1HG}\varepsilon_{HG}L_{HG}$				$-Fb^2/EJ$	
A	molla nodo $-V_{1A}(V_{0A}+XV_{1A})/k_A$				$-1/2Fb^2/EJ$	1/4Xb/EJ
	totali				$-Fb^2/EJ$	23/12Xb/EJ
	iperstatica $X=W_{GA}$				12/23Fb	

Sviluppi di calcolo iperstatica

$L^{XX}_{GA} = \int_o^b (1 - 2\,x/b + x^2/b^2)\ 1/EJ\ dx = [\ x - x^2/b + 1/3\ x^3/b^2\ ]_o^b\ 1/EJ$

$= (\ b - b + 1/3\ b\ )\ 1/EJ\ = 1/3\ b/EJ$

$L^{XX}_{AG} = \int_o^b (\ x^2/b^2\ )\ 1/EJ\ dx = [1/3\ x^3/b^2\ ]_o^b\ 1/EJ$

$= (1/3\ b\ )\ 1/EJ\ = 1/3\ b/EJ$

$L^{XX}_{HI} = \int_o^b (1 - 2\,x/b + x^2/b^2)\ 1/EJ\ dx = [\ x - x^2/b + 1/3\ x^3/b^2\ ]_o^b\ 1/EJ$

$= (\ b - b + 1/3\ b\ )\ 1/EJ\ = 1/3\ b/EJ$

$L^{XX}_{IH} = \int_o^b (\ x^2/b^2\ )\ 1/EJ\ dx = [1/3\ x^3/b^2\ ]_o^b\ 1/EJ$

$= (1/3\ b\ )\ 1/EJ\ = 1/3\ b/EJ$

$L^{XX}_{HG} = \int_o^b (1)\ 1/EJ\ dx = [\ x\ ]_o^b\ 1/EJ$

$= (\ b\ )\ 1/EJ\ =\ b/EJ$

$L^{XX}_{GH} = \int_o^b (1)\ 1/EJ\ dx = [\ x\ ]_o^b\ 1/EJ$

$= (\ b\ )\ 1/EJ\ =\ b/EJ$

$L^{Xo}_{GA} = \int_o^b (\ x/b - x^2/b^2\ )\ Fb\ 1/EJ\ dx = [1/2\ x^2/b - 1/3\ x^3/b^2\ ]_o^b\ Fb\ 1/EJ$

$= (1/2\ b - 1/3\ b\ )\ Fb\ 1/EJ\ = 1/6\ \ Fb^2/EJ$

$L^{Xo}_{AG} = \int_o^b (\ x/b - x^2/b^2\ )\ Fb\ 1/EJ\ dx = [1/2\ x^2/b - 1/3\ x^3/b^2\ ]_o^b\ Fb\ 1/EJ$

$= (1/2\ b - 1/3\ b\ )\ Fb\ 1/EJ\ = 1/6\ \ Fb^2/EJ$

$L^{Xo}_{HI} = \int_o^b (1 - 2\,x/b + x^2/b^2)\ Fb\ 1/EJ\ dx = [\ x - x^2/b + 1/3\ x^3/b^2\ ]_o^b\ Fb\ 1/EJ$

$= (\ b - b + 1/3\ b\ )\ Fb\ 1/EJ\ = 1/3\ \ Fb^2/EJ$

$L^{Xo}_{IH} = \int_o^b (\ x^2/b^2\ )\ Fb\ 1/EJ\ dx = [1/3\ x^3/b^2\ ]_o^b\ Fb\ 1/EJ$

$= (1/3\ b\ )\ Fb\ 1/EJ\ = 1/3\ \ Fb^2/EJ$

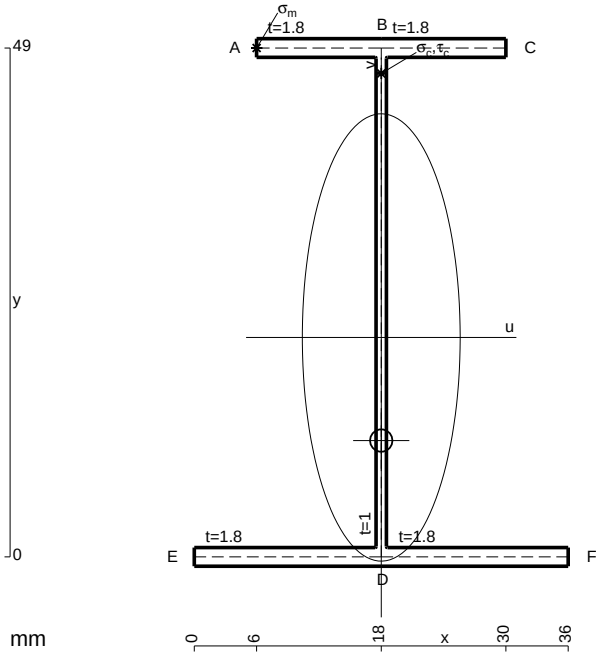

A = 157. mm^2
J_u = 72847. mm^4
J_v = 9072. mm^4
J_t = 133. mm^4
y_o = -9.929 mm
y_g = 21.13 mm
T_y = 800. N
M_x = -568000. Nmm
x_m = 6. mm
y_m = 49. mm
u_m = -12. mm
v_m = 27.87 mm
$\sigma_m = -Mv/J_u$ = 217.3 N/mm^2
x_c = 18. mm
y_c = 49. mm
v_c = 27.87 mm
$\sigma_c = -Mv/J_u$ = 217.3 N/mm^2
$\tau_c = TS^*/tJ_u$ = 13.22 N/mm^2
$\tau_g = TS^*/tJ_u$ = 13.22 N/mm^2
t_c = 800. mm
$\sigma_o = \sqrt{\sigma^2 + 3\tau^2}$ = 218.5 N/mm^2

ESΣ05.xxxx.067

@ Adolfo Zavelani Rossi, Politecnico di Milano, vers.27.03.13 01.12.25

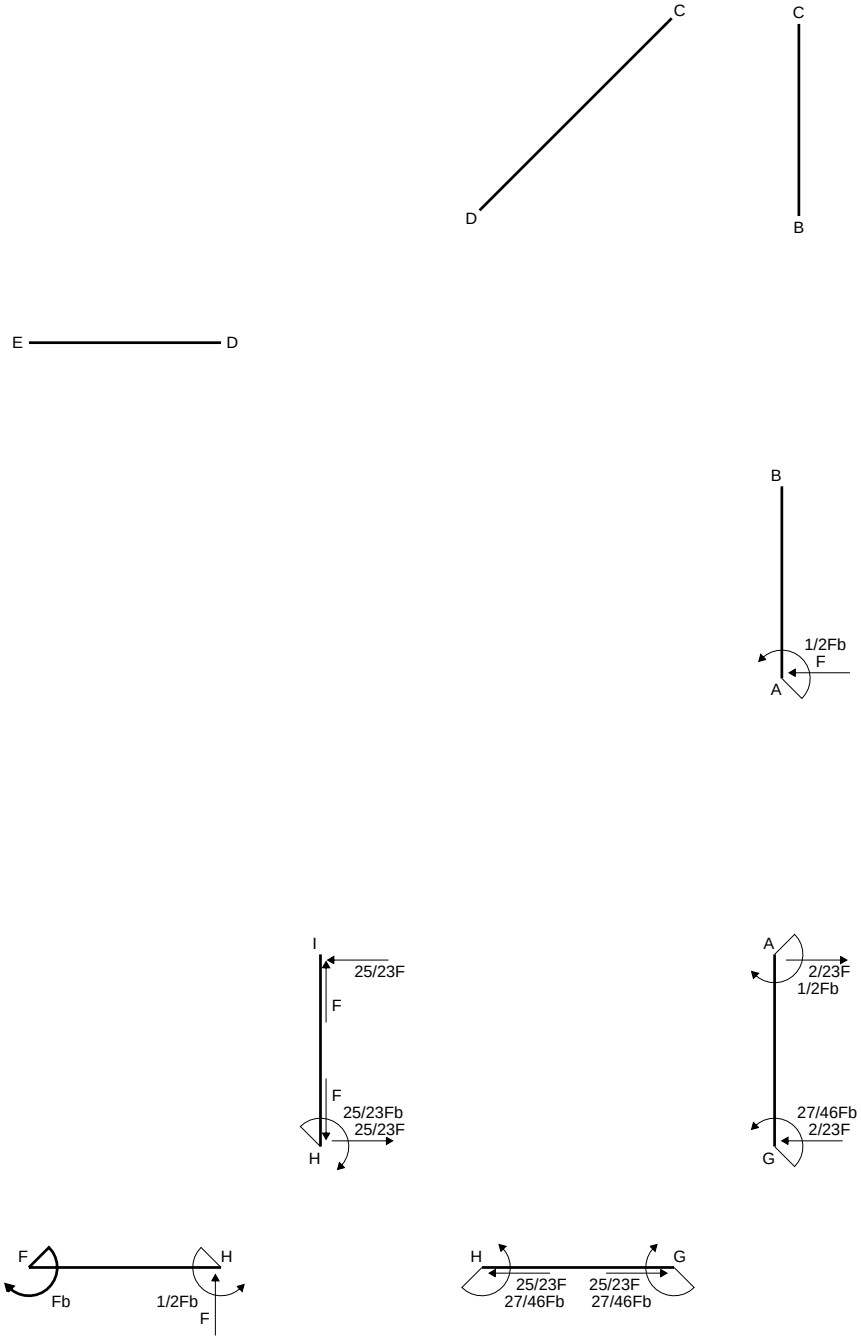
C
D
C
B
E
D
E
F
B
1/2Fb
F
A
I
25/23F
F
F
25/23Fb
25/23F
H
A
2/23F
1/2Fb
27/46Fb
2/23F
G
F
H
Fb
1/2Fb
F
H
G
25/23F
27/46Fb
25/23F
27/46Fb

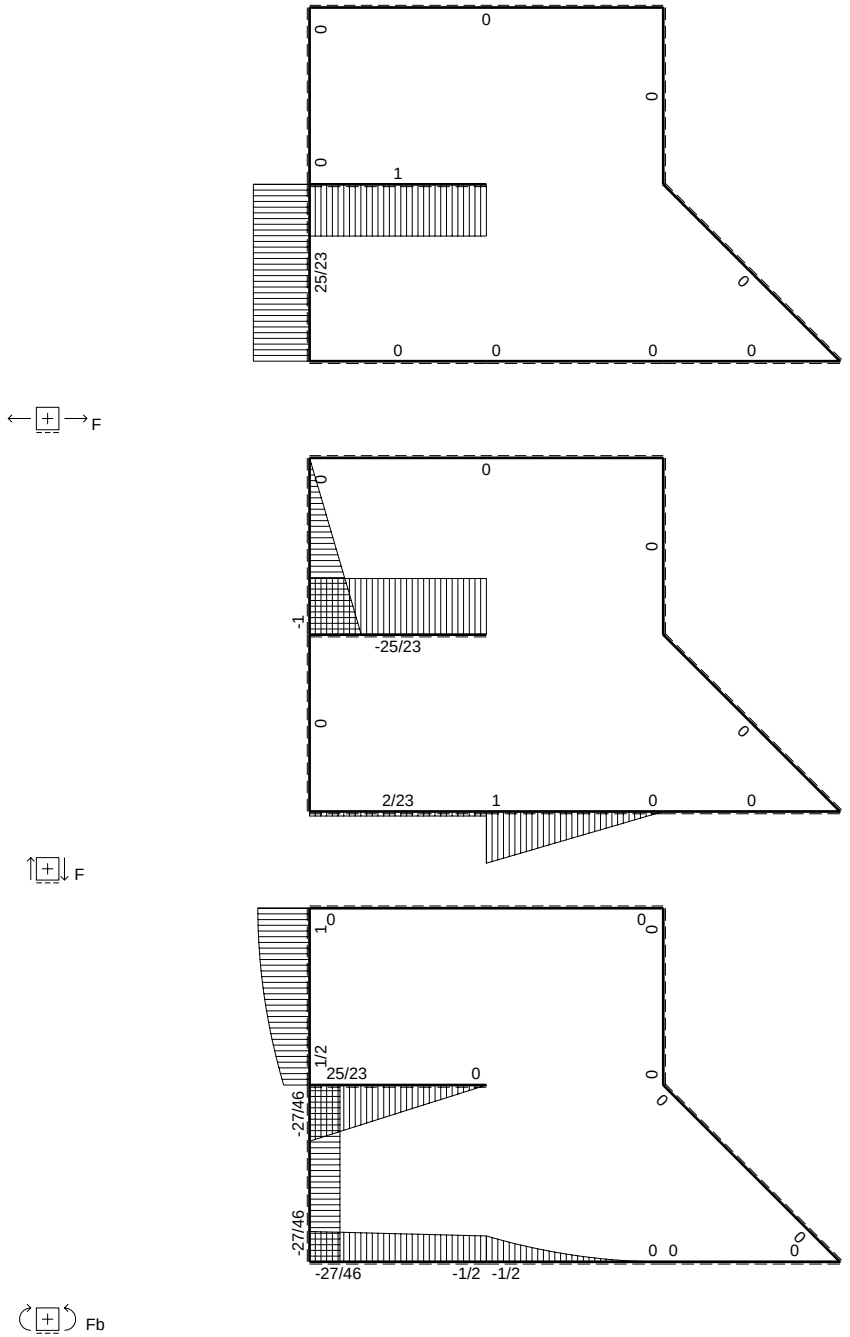
0
0
0
0
1
25/23
0
0
0
0
0
F
0
0
0
-1
-25/23
0
0
2/23
1
0
0
F
1
0
0
0
1/2
25/23
0
0
0
-27/46
-27/46
0 0
0
-27/46
-1/2 -1/2
Fb

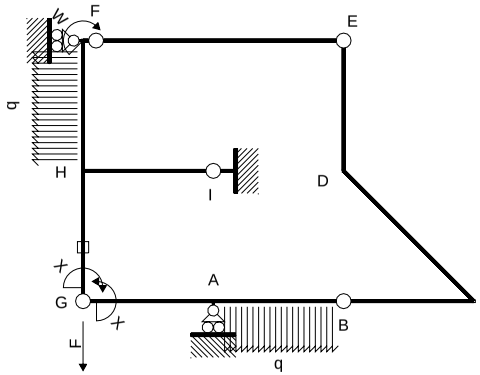

Schema di calcolo iperstatico

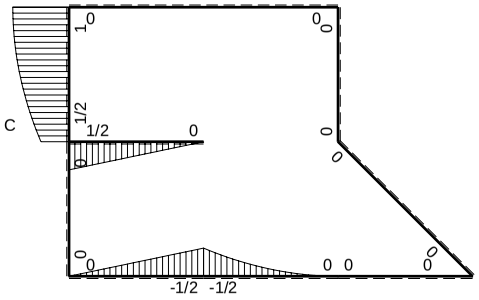

M_0 flessione da carichi assegnati

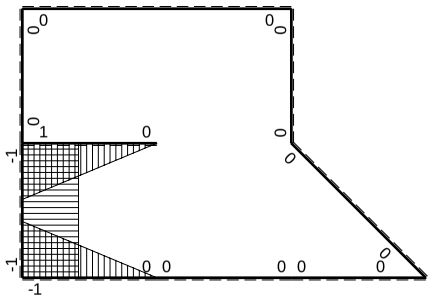

M_x flessione da iperstatica X=1

Quadro contributi PLV per iperstatica $X=W_{GA}$

→	$M_x(x)$	$M_o(x)$	M_xM_o	M_xM_x	$\int M_xM_o/EJdx$	$\int XM_xM_x/EJdx$
AB b	0	$-1/2Fb+Fx-1/2qx^2$	0	0	0	0
BA b	0	$1/2qx^2$	0	0		
BC b	0	0	0	0	0	0
CB b	0	0	0	0		
CD √2b	0	0	0	0	0	0
DE b	0	0	0	0	0	0
ED b	0	0	0	0		
EF 2b	0	0	0	0	0	0
FE 2b	0	0	0	0		
GA b	-1+x/b	-1/2Fx	$1/2Fx-1/2Fx^2/b$	$1-2x/b+x^2/b^2$	$1/12Fb^2/EJ$	$1/3Xb/EJ$
AG b	x/b	1/2Fb-1/2Fx	$1/2Fx-1/2Fx^2/b$	x^2/b^2		
FH b	0	$Fb-1/2qx^2$	0	0	0	0
HF b	0	$-1/2Fb-Fx+1/2qx^2$	0	0		
HI b	1-x/b	1/2Fb-1/2Fx	$1/2Fb-Fx+1/2Fx^2/b$	$1-2x/b+x^2/b^2$	$1/6Fb^2/EJ$	$1/3Xb/EJ$
IH b	-x/b	-1/2Fx	$1/2Fx^2/b$	x^2/b^2		
HG b	-1	0	0	1	0	Xb/EJ
GH b	1	0	0	1		
HG	elongazione asta $N_{1HG}\varepsilon_{HG}L_{HG}$				$-Fb^2/EJ$	
A	molla nodo $-V_{1A}(V_{0A}+XV_{1A})/k_A$				$-3/8Fb^2/EJ$	$1/4Xb/EJ$
	totali				$-9/8Fb^2/EJ$	$23/12Xb/EJ$
	iperstatica $X=W_{GA}$				27/46Fb	

Sviluppi di calcolo iperstatica

$L^{XX}_{GA} = \int_o^b (1 - 2\,x/b + x^2/b^2)\ 1/EJ\ dx = [\,x - x^2/b + 1/3\,x^3/b^2\,]_o^b\ 1/EJ$

$= (\,b - b + 1/3\,b\,)\ 1/EJ = 1/3\ b/EJ$

$L^{XX}_{AG} = \int_o^b (\,x^2/b^2\,)\ 1/EJ\ dx = [1/3\,x^3/b^2\,]_o^b\ 1/EJ$

$= (1/3\,b)\ 1/EJ = 1/3\ b/EJ$

$L^{XX}_{HI} = \int_o^b (1 - 2\,x/b + x^2/b^2)\ 1/EJ\ dx = [\,x - x^2/b + 1/3\,x^3/b^2\,]_o^b\ 1/EJ$

$= (\,b - b + 1/3\,b\,)\ 1/EJ = 1/3\ b/EJ$

$L^{XX}_{IH} = \int_o^b (\,x^2/b^2\,)\ 1/EJ\ dx = [1/3\,x^3/b^2\,]_o^b\ 1/EJ$

$= (1/3\,b)\ 1/EJ = 1/3\ b/EJ$

$L^{XX}_{HG} = \int_o^b (1)\ 1/EJ\ dx = [\,x\,]_o^b\ 1/EJ$

$= (\,b\,)\ 1/EJ = b/EJ$

$L^{XX}_{GH} = \int_o^b (1)\ 1/EJ\ dx = [\,x\,]_o^b\ 1/EJ$

$= (\,b\,)\ 1/EJ = b/EJ$

$L^{Xo}_{GA} = \int_o^b (1/2\,x/b - 1/2\,x^2/b^2)\ Fb\ 1/EJ\ dx = [1/4\,x^2/b - 1/6\,x^3/b^2\,]_o^b\ Fb\ 1/EJ$

$= (1/4\,b - 1/6\,b\,)\ Fb\ 1/EJ = 1/12\ Fb^2/EJ$

$L^{Xo}_{AG} = \int_o^b (1/2\,x/b - 1/2\,x^2/b^2)\ Fb\ 1/EJ\ dx = [1/4\,x^2/b - 1/6\,x^3/b^2\,]_o^b\ Fb\ 1/EJ$

$= (1/4\,b - 1/6\,b\,)\ Fb\ 1/EJ = 1/12\ Fb^2/EJ$

$L^{Xo}_{HI} = \int_o^b (1/2 - x/b + 1/2\,x^2/b^2)\ Fb\ 1/EJ\ dx = [1/2\,x - 1/2\,x^2/b + 1/6\,x^3/b^2\,]_o^b\ Fb\ 1/EJ$

$= (1/2\,b - 1/2\,b + 1/6\,b\,)\ Fb\ 1/EJ = 1/6\ Fb^2/EJ$

$L^{Xo}_{IH} = \int_o^b (1/2\,x^2/b^2)\ Fb\ 1/EJ\ dx = [1/6\,x^3/b^2\,]_o^b\ Fb\ 1/EJ$

$= (1/6\,b)\ Fb\ 1/EJ = 1/6\ Fb^2/EJ$

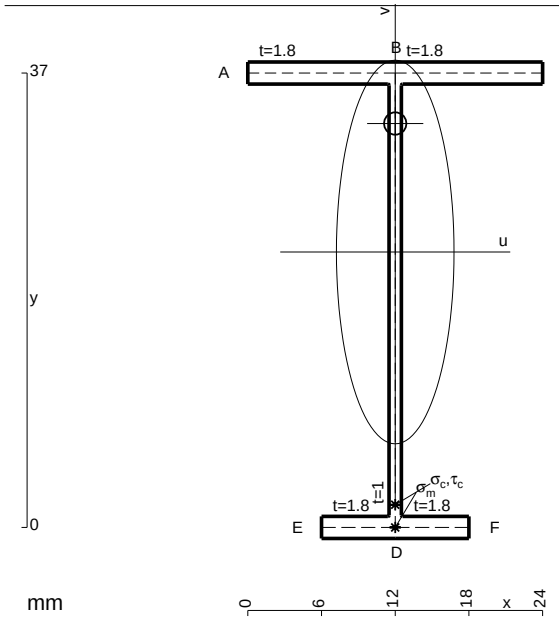

A = 101.8 mm^2
J_u = 24830. mm^4
J_v = 2333. mm^4
J_t = 82.32 mm^4
y_o = 10.46 mm
y_g = 22.43 mm
T_y = 920. N
M_x = -253000. Nmm
x_m = 12. mm
v_m = -22.43 mm
$\sigma_m = -Mv/J_u$ = -228.5 N/mm^2
y_c = 3. mm
u_c = -12. mm
v_c = -19.43 mm
$\sigma_c = -Mv/J_u$ = -228.5 N/mm^2
$\tau_c = TS^*/tJ_u$ = 17.95 N/mm^2
$\tau_g = TS^*/tJ_u$ = 17.95 N/mm^2
t_c = 920. mm
$\sigma_o = \sqrt{\sigma^2 + 3\tau^2}$ = 230.6 N/mm^2

ESΣ05.xxxx.068

@ Adolfo Zavelani Rossi, Politecnico di Milano, vers.27.03.13 01.12.25

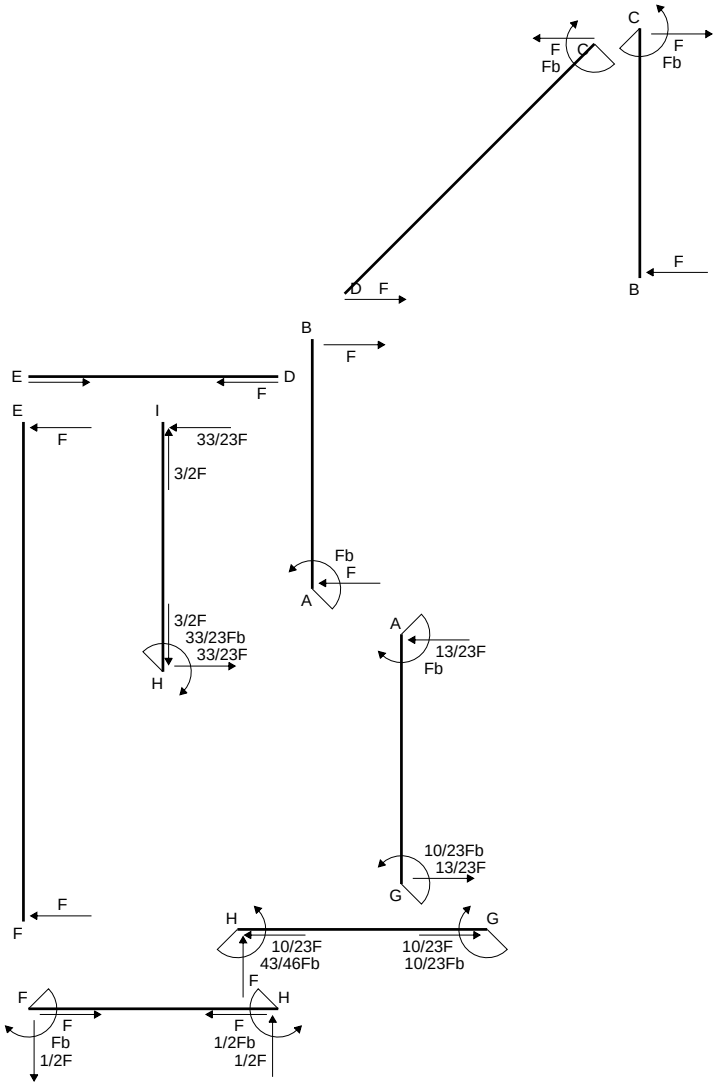
C
F
Fb
C
F
Fb
D
F
B
F
B
F
E
D
F
E
F
I
33/23F
3/2F
Fb
F
A
3/2F
33/23Fb
33/23F
H
A
13/23F
Fb
10/23Fb
13/23F
G
F
F
H
G
10/23F
43/46Fb
10/23F
10/23Fb
F
F
H
F
Fb
1/2F
F
1/2Fb
1/2F

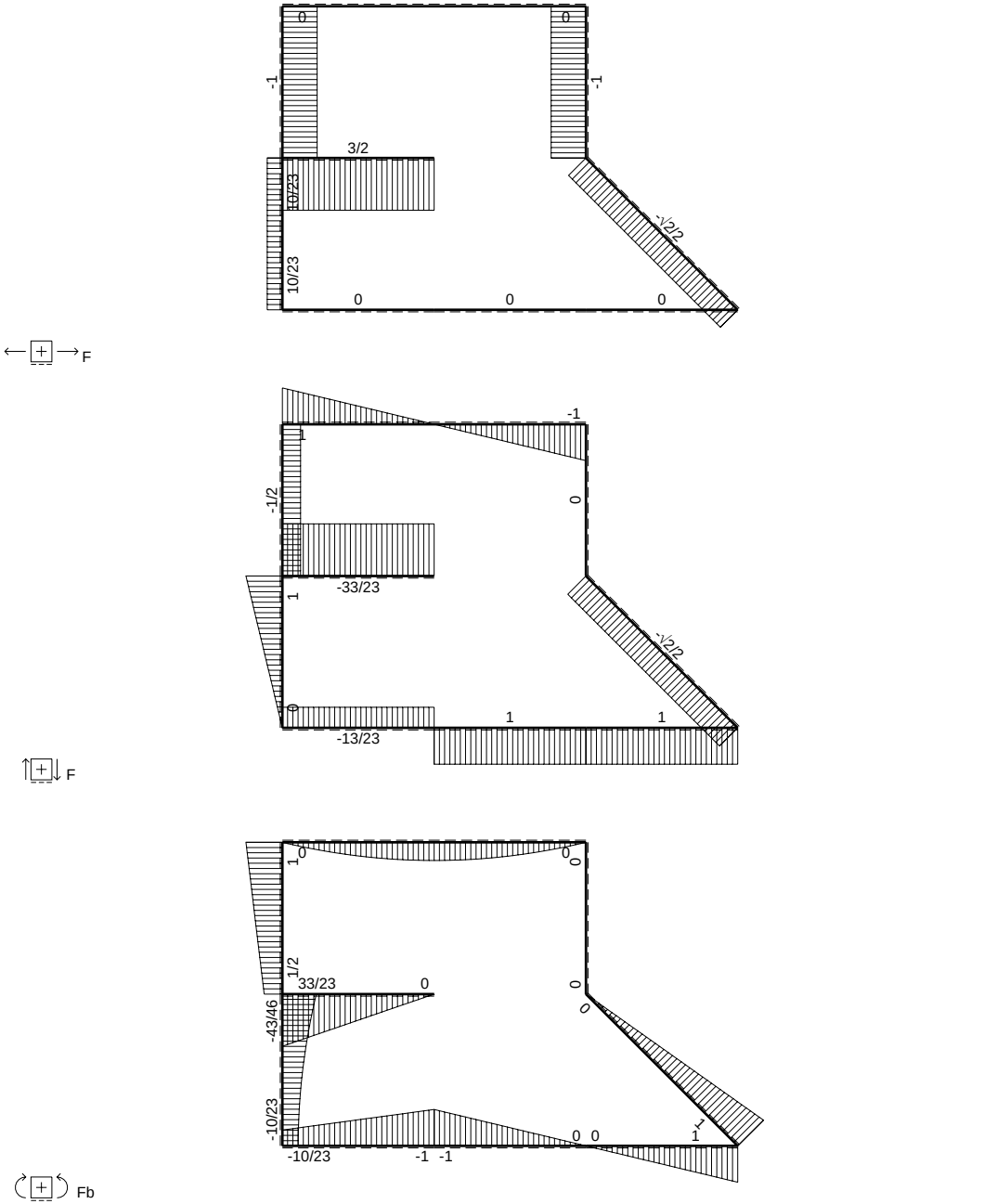
F
0
0
-1
-1
3/2
10/23
-√2/2
10/23
0
0
0
F
-1
1
-1/2
0
-33/23
1
-√2/2
0
1
1
-13/23
F
1
0
0
1/2
33/23
0
0
0
-43/46
-10/23
0 0
1
-10/23
-1 -1
Fb

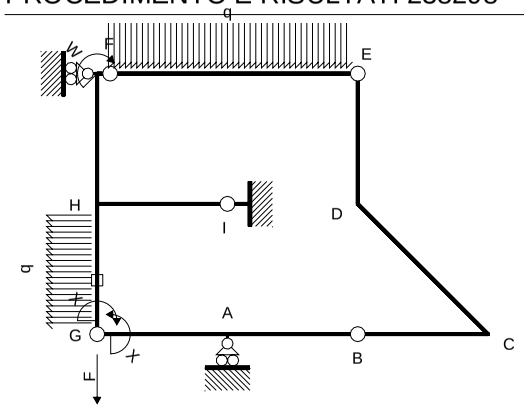

Schema di calcolo iperstatico

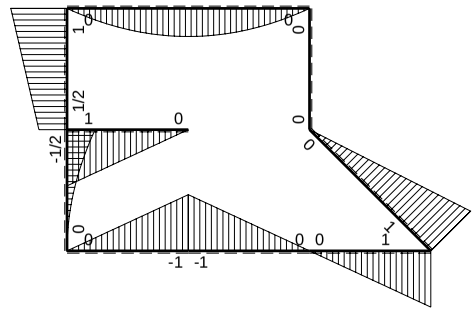

M_0 flessione da carichi assegnati

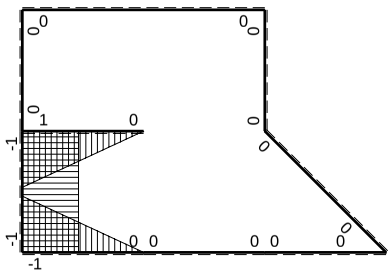

M_x flessione da iperstatica X=1

Quadro contributi PLV per iperstatica $X=W_{GA}$

→	$M_x(x)$	$M_o(x)$	M_xM_o	M_xM_x	$\int M_xM_o/EJdx$	$\int XM_xM_x/EJdx$
AB b	0	-Fb+Fx	0	0	0	0
BA b	0	Fx	0	0		
BC b	0	Fx	0	0	0	0
CB b	0	-Fb+Fx	0	0		
CD √2b	0	Fb-√2/2Fx	0	0	0	0
DE b	0	0	0	0	0	0
ED b	0	0	0	0		
EF 2b	0	$-Fx+1/2qx^2$	0	0	0	0
FE 2b	0	$Fx-1/2qx^2$	0	0		
GA b	-1+x/b	-Fx	$Fx-Fx^2/b$	$1-2x/b+x^2/b^2$	$1/6Fb^2/EJ$	1/3Xb/EJ
AG b	x/b	Fb-Fx	$Fx-Fx^2/b$	x^2/b^2		
FH b	0	Fb-1/2Fx	0	0	0	0
HF b	0	-1/2Fb-1/2Fx	0	0		
HI b	1-x/b	Fb-Fx	$Fb-2Fx+Fx^2/b$	$1-2x/b+x^2/b^2$	$1/3Fb^2/EJ$	1/3Xb/EJ
IH b	-x/b	-Fx	Fx^2/b	x^2/b^2		
HG b	-1	$-1/2Fb+Fx-1/2qx^2$	$1/2Fb-Fx+1/2Fx^2/b$	1	$1/6Fb^2/EJ$	Xb/EJ
GH b	1	$1/2qx^2$	$1/2Fx^2/b$	1		
HG	elongazione asta $N_{1HG}\varepsilon_{HG}L_{HG}$				$-Fb^2/EJ$	
A	molla nodo $-V_{1A}(V_{0A}+XV_{1A})/k_A$				$-1/2Fb^2/EJ$	1/4Xb/EJ
	totali				$-5/6Fb^2/EJ$	23/12Xb/EJ
	iperstatica $X=W_{GA}$				10/23Fb	

Sviluppi di calcolo iperstatica

$L^{XX}_{GA} = \int_o^b (1 - 2\,x/b + x^2/b^2)\ 1/EJ\ dx = [\ x - x^2/b + 1/3\ x^3/b^2\ ]_o^b\ 1/EJ$

$= (\ b - b + 1/3\ b\ )\ 1/EJ\ = 1/3\ b/EJ$

$L^{XX}_{AG} = \int_o^b (\ x^2/b^2\ )\ 1/EJ\ dx = [1/3\ x^3/b^2\ ]_o^b\ 1/EJ$

$= (1/3\ b\ )\ 1/EJ\ = 1/3\ b/EJ$

$L^{XX}_{HI} = \int_o^b (1 - 2\,x/b + x^2/b^2)\ 1/EJ\ dx = [\ x - x^2/b + 1/3\ x^3/b^2\ ]_o^b\ 1/EJ$

$= (\ b - b + 1/3\ b\ )\ 1/EJ\ = 1/3\ b/EJ$

$L^{XX}_{IH} = \int_o^b (\ x^2/b^2\ )\ 1/EJ\ dx = [1/3\ x^3/b^2\ ]_o^b\ 1/EJ$

$= (1/3\ b\ )\ 1/EJ\ = 1/3\ b/EJ$

$L^{XX}_{HG} = \int_o^b (1\ )\ 1/EJ\ dx = [\ x\ ]_o^b\ 1/EJ$

$= (\ b\ )\ 1/EJ\ =\ b/EJ$

$L^{XX}_{GH} = \int_o^b (1\ )\ 1/EJ\ dx = [\ x\ ]_o^b\ 1/EJ$

$= (\ b\ )\ 1/EJ\ =\ b/EJ$

$L^{Xo}_{GA} = \int_o^b (\ x/b - x^2/b^2\ )\ Fb\ 1/EJ\ dx = [1/2\ x^2/b - 1/3\ x^3/b^2\ ]_o^b\ Fb\ 1/EJ$

$= (1/2\ b - 1/3\ b\ )\ Fb\ 1/EJ\ = 1/6\ Fb^2/EJ$

$L^{Xo}_{AG} = \int_o^b (\ x/b - x^2/b^2\ )\ Fb\ 1/EJ\ dx = [1/2\ x^2/b - 1/3\ x^3/b^2\ ]_o^b\ Fb\ 1/EJ$

$= (1/2\ b - 1/3\ b\ )\ Fb\ 1/EJ\ = 1/6\ Fb^2/EJ$

$L^{Xo}_{HI} = \int_o^b (1 - 2\,x/b + x^2/b^2)\ Fb\ 1/EJ\ dx = [\ x - x^2/b + 1/3\ x^3/b^2\ ]_o^b\ Fb\ 1/EJ$

$= (\ b - b + 1/3\ b\ )\ Fb\ 1/EJ\ = 1/3\ Fb^2/EJ$

$L^{Xo}_{IH} = \int_o^b (\ x^2/b^2\ )\ Fb\ 1/EJ\ dx = [1/3\ x^3/b^2\ ]_o^b\ Fb\ 1/EJ$

$= (1/3\ b\ )\ Fb\ 1/EJ\ = 1/3\ Fb^2/EJ$

$L^{Xo}_{HG} = \int_o^b (1/2 - x/b + 1/2\ x^2/b^2\ )\ Fb\ 1/EJ\ dx - 1\ \ (-1)\ \ (-1)\ \ Fb^2/EJ$

$= [1/2\ x - 1/2\ x^2/b + 1/6\ x^3/b^2\ ]_o^b\ Fb\ 1/EJ\ - 1\ \ (-1)\ \ (-1)\ \ Fb^2/EJ$

$= (1/2\ b - 1/2\ b + 1/6\ b\ )\ Fb\ 1/EJ\ - 1\ \ (-1)\ \ (-1)\ \ Fb^2/EJ = -5/6\ \ Fb^2/EJ$

$L^{Xo}_{GH} = \int_o^b (1/2\ x^2/b^2\ )\ Fb\ 1/EJ\ dx - 1\ \ (-1)\ \ (-1)\ \ Fb^2/EJ = [1/6\ x^3/b^2\ ]_o^b\ Fb\ 1/EJ\ - 1\ \ (-1)\ \ (-1)\ \ Fb^2/EJ$

$= (1/6\ b\ )\ Fb\ 1/EJ\ - 1\ \ (-1)\ \ (-1)\ \ Fb^2/EJ = -5/6\ \ Fb^2/EJ$

PROCEDIMENTO E RISULTATI 238298 ESΣ05.xxxx.069

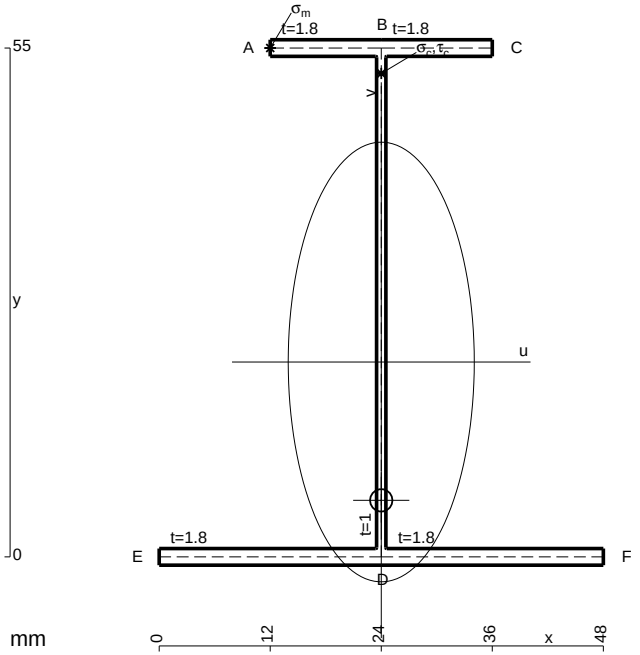

A = 184.6 mm^2
J_u = 104229. mm^4
J_v = 18662. mm^4
J_t = 158.3 mm^4
y_o = -14.95 mm
y_g = 21.06 mm
T_y = 820. N
M_x = -729800. Nmm
x_m = 12. mm
y_m = 55. mm
u_m = -12. mm
v_m = 33.94 mm
$\sigma_m = -Mv/J_u$ = 237.6 N/mm^2
x_c = 24. mm
y_c = 55. mm
v_c = 33.94 mm
$\sigma_c = -Mv/J_u$ = 237.6 N/mm^2
$\tau_c = TS^*/tJ_u$ = 11.53 N/mm^2
$\tau_g = TS^*/tJ_u$ = 11.53 N/mm^2
t_c = 820. mm
$\sigma_o = \sqrt{\sigma^2 + 3\tau^2}$ = 238.5 N/mm^2

@ Adolfo Zavelani Rossi, Politecnico di Milano, vers.27.03.13 01.12.25

ESΣ05.xxxx.069

@ Adolfo Zavelani Rossi, Politecnico di Milano, vers.27.03.13 01.12.25

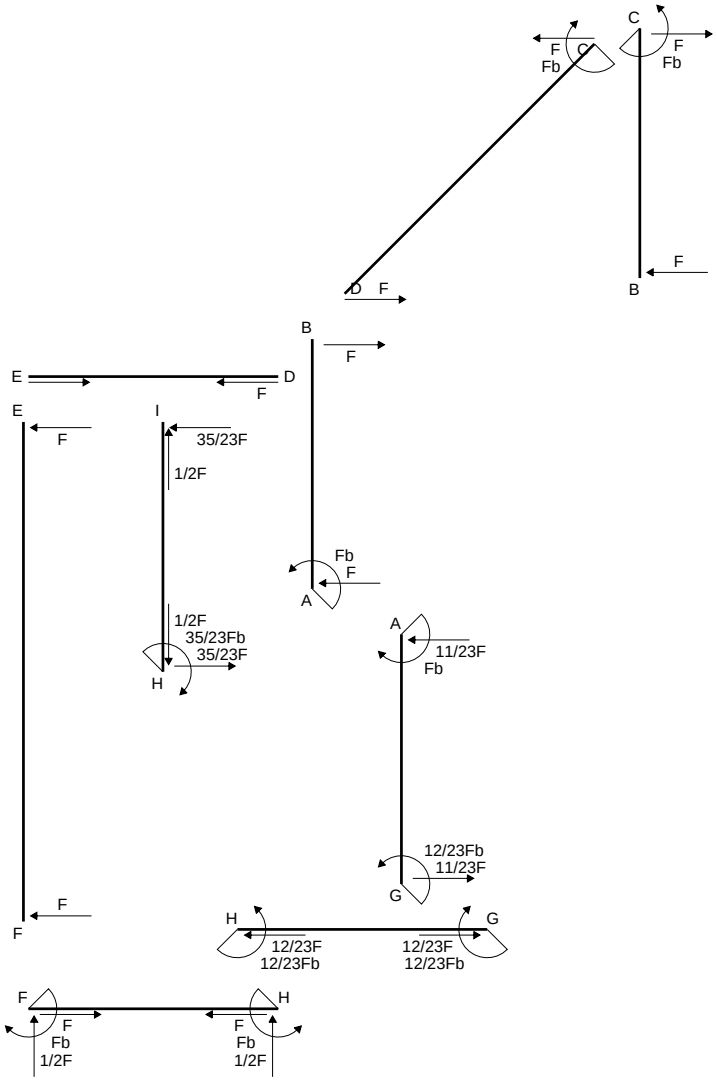
C
F
Fb
C
F
Fb
F
D
F
B
F
B
E
D
F
E
F
I
35/23F
1/2F
Fb
F
A
1/2F
35/23Fb
35/23F
H
A
11/23F
Fb
12/23Fb
11/23F
G
F
F
H
G
12/23F
12/23Fb
12/23F
12/23Fb
F
H
F
Fb
1/2F
F
Fb
1/2F

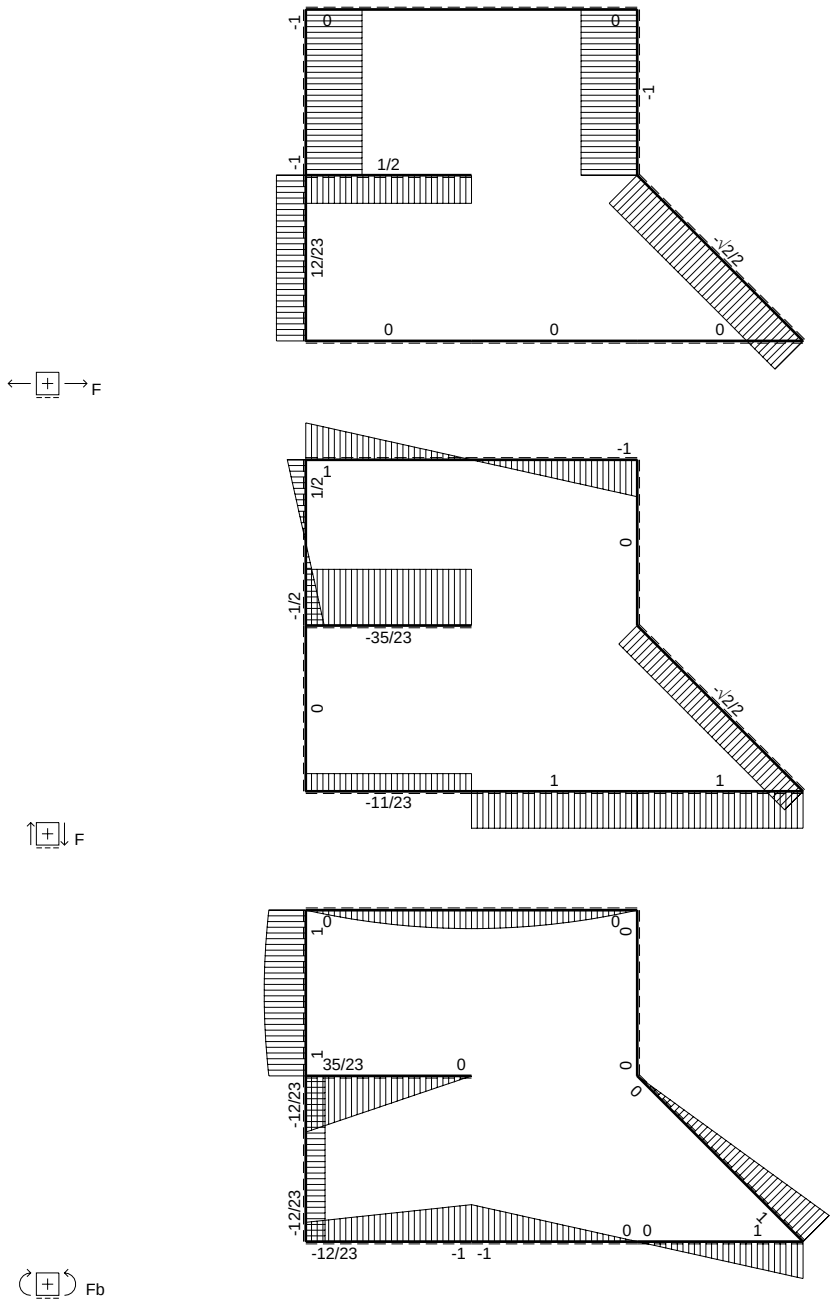
F
-1
0
0
-1
-1
1/2
12/23
-√2/2
0
0
0
F
-1
1/2
1
0
-1/2
-35/23
0
-√2/2
1
1
-11/23
F
1
0
0
1
35/23
0
-12/23
0
0
-12/23
-1
0 0
1
-12/23
-1 -1
Fb

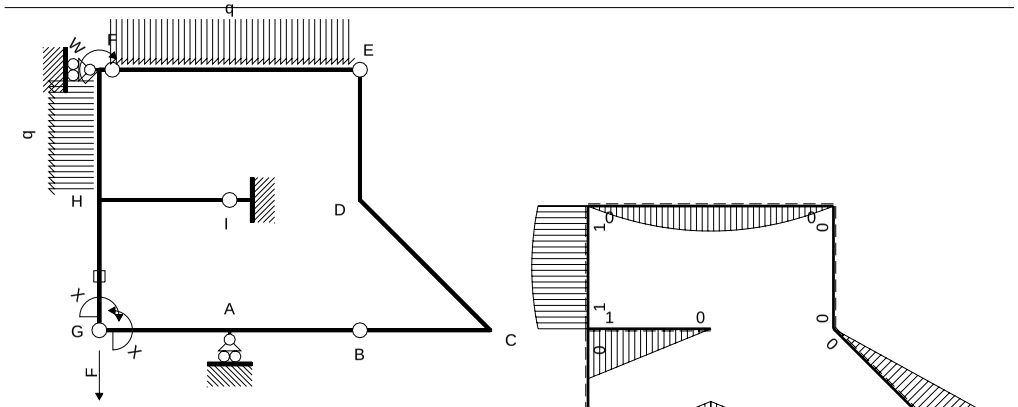

Schema di calcolo iperstatico

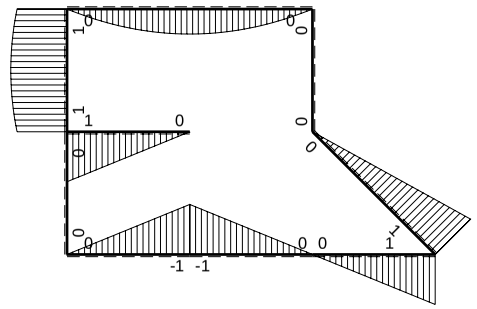

M_0 flessione da carichi assegnati

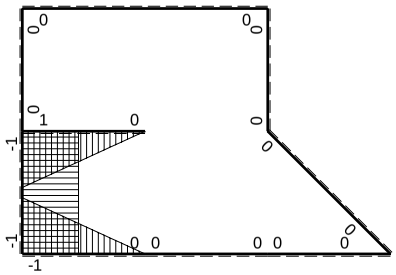

M_x flessione da iperstatica X=1

Quadro contributi PLV per iperstatica $X=W_{GA}$

→	$M_x(x)$	$M_o(x)$	M_xM_o	M_xM_x	$\int M_xM_o/EJdx$	$\int XM_xM_x/EJdx$
AB b	0	-Fb+Fx	0	0	0	0
BA b	0	Fx	0	0		
BC b	0	Fx	0	0	0	0
CB b	0	-Fb+Fx	0	0		
CD √2b	0	Fb-√2/2Fx	0	0	0	0
DE b	0	0	0	0	0	0
ED b	0	0	0	0		
EF 2b	0	$-Fx+1/2qx^2$	0	0	0	0
FE 2b	0	$Fx-1/2qx^2$	0	0		
GA b	$-1+x/b$	-Fx	$Fx-Fx^2/b$	$1-2x/b+x^2/b^2$	$1/6Fb^2/EJ$	1/3Xb/EJ
AG b	x/b	Fb-Fx	$Fx-Fx^2/b$	x^2/b^2		
FH b	0	$Fb+1/2Fx-1/2qx^2$	0	0	0	0
HF b	0	$-Fb-1/2Fx+1/2qx^2$	0	0		
HI b	1-x/b	Fb-Fx	$Fb-2Fx+Fx^2/b$	$1-2x/b+x^2/b^2$	$1/3Fb^2/EJ$	1/3Xb/EJ
IH b	-x/b	-Fx	Fx^2/b	x^2/b^2		
HG b	-1	0	0	1	0	Xb/EJ
GH b	1	0	0	1		
HG	elongazione asta $N_{1HG}\varepsilon_{HG}L_{HG}$				$-Fb^2/EJ$	
A	molla nodo $-V_{1A}(V_{0A}+XV_{1A})/k_A$				$-1/2Fb^2/EJ$	1/4Xb/EJ
	totali				$-Fb^2/EJ$	23/12Xb/EJ
	iperstatica $X=W_{GA}$				12/23Fb	

Sviluppi di calcolo iperstatica

$L^{XX}_{GA} = \int_o^b (1 - 2\,x/b + x^2/b^2)\ 1/EJ\ dx = [\ x - x^2/b + 1/3\ x^3/b^2\ ]_o^b\ 1/EJ$

$= (\ b - b + 1/3\ b\ )\ 1/EJ\ = 1/3\ b/EJ$

$L^{XX}_{AG} = \int_o^b (\ x^2/b^2\ )\ 1/EJ\ dx = [1/3\ x^3/b^2\ ]_o^b\ 1/EJ$

$= (1/3\ b\ )\ 1/EJ\ = 1/3\ b/EJ$

$L^{XX}_{HI} = \int_o^b (1 - 2\,x/b + x^2/b^2)\ 1/EJ\ dx = [\ x - x^2/b + 1/3\ x^3/b^2\ ]_o^b\ 1/EJ$

$= (\ b - b + 1/3\ b\ )\ 1/EJ\ = 1/3\ b/EJ$

$L^{XX}_{IH} = \int_o^b (\ x^2/b^2\ )\ 1/EJ\ dx = [1/3\ x^3/b^2\ ]_o^b\ 1/EJ$

$= (1/3\ b\ )\ 1/EJ\ = 1/3\ b/EJ$

$L^{XX}_{HG} = \int_o^b (1)\ 1/EJ\ dx = [\ x\ ]_o^b\ 1/EJ$

$= (\ b\ )\ 1/EJ\ =\ b/EJ$

$L^{XX}_{GH} = \int_o^b (1)\ 1/EJ\ dx = [\ x\ ]_o^b\ 1/EJ$

$= (\ b\ )\ 1/EJ\ =\ b/EJ$

$L^{Xo}_{GA} = \int_o^b (\ x/b - x^2/b^2\ )\ Fb\ 1/EJ\ dx = [1/2\ x^2/b - 1/3\ x^3/b^2\ ]_o^b\ Fb\ 1/EJ$

$= (1/2\ b - 1/3\ b\ )\ Fb\ 1/EJ\ = 1/6\ \ Fb^2/EJ$

$L^{Xo}_{AG} = \int_o^b (\ x/b - x^2/b^2\ )\ Fb\ 1/EJ\ dx = [1/2\ x^2/b - 1/3\ x^3/b^2\ ]_o^b\ Fb\ 1/EJ$

$= (1/2\ b - 1/3\ b\ )\ Fb\ 1/EJ\ = 1/6\ \ Fb^2/EJ$

$L^{Xo}_{HI} = \int_o^b (1 - 2\,x/b + x^2/b^2)\ Fb\ 1/EJ\ dx = [\ x - x^2/b + 1/3\ x^3/b^2\ ]_o^b\ Fb\ 1/EJ$

$= (\ b - b + 1/3\ b\ )\ Fb\ 1/EJ\ = 1/3\ \ Fb^2/EJ$

$L^{Xo}_{IH} = \int_o^b (\ x^2/b^2\ )\ Fb\ 1/EJ\ dx = [1/3\ x^3/b^2\ ]_o^b\ Fb\ 1/EJ$

$= (1/3\ b\ )\ Fb\ 1/EJ\ = 1/3\ \ Fb^2/EJ$

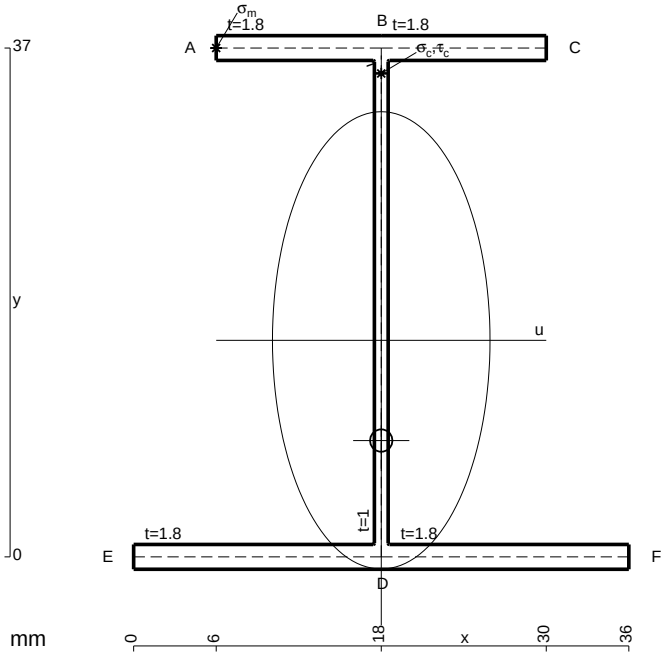

A = 145. mm^2
J_u = 40083. mm^4
J_v = 9072. mm^4
J_t = 129. mm^4
y_o = -7.287 mm
y_g = 15.74 mm
T_y = 1210. N
M_x = -375100. Nmm
x_m = 6. mm
y_m = 37. mm
u_m = -12. mm
v_m = 21.26 mm
$\sigma_m = -Mv/J_u$ = 198.9 N/mm^2
x_c = 18. mm
y_c = 37. mm
v_c = 21.26 mm
$\sigma_c = -Mv/J_u$ = 198.9 N/mm^2
$\tau_c = TS^*/tJ_u$ = 27.72 N/mm^2
$\tau_g = TS^*/tJ_u$ = 27.72 N/mm^2
t_c = 1210. mm
$\sigma_o = \sqrt{\sigma^2 + 3\tau^2}$ = 204.6 N/mm^2

ESΣ05.xxxx.070

@ Adolfo Zavelani Rossi, Politecnico di Milano, vers.27.03.13 01.12.25

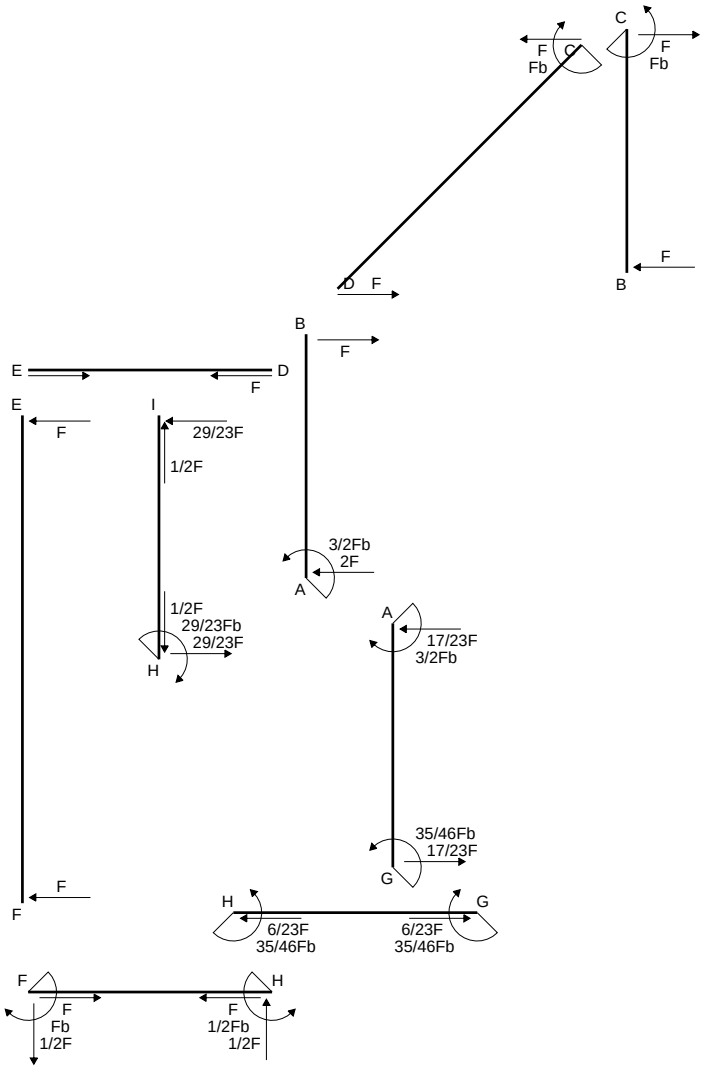
C
F
Fb
C
F
Fb
F
B
D
F
B
F
E
D
F
E
F
I
29/23F
1/2F
3/2Fb
2F
A
1/2F
29/23Fb
29/23F
H
A
17/23F
3/2Fb
35/46Fb
17/23F
G
F
F
H
G
6/23F
35/46Fb
6/23F
35/46Fb
F
H
F
Fb
1/2F
F
1/2Fb
1/2F

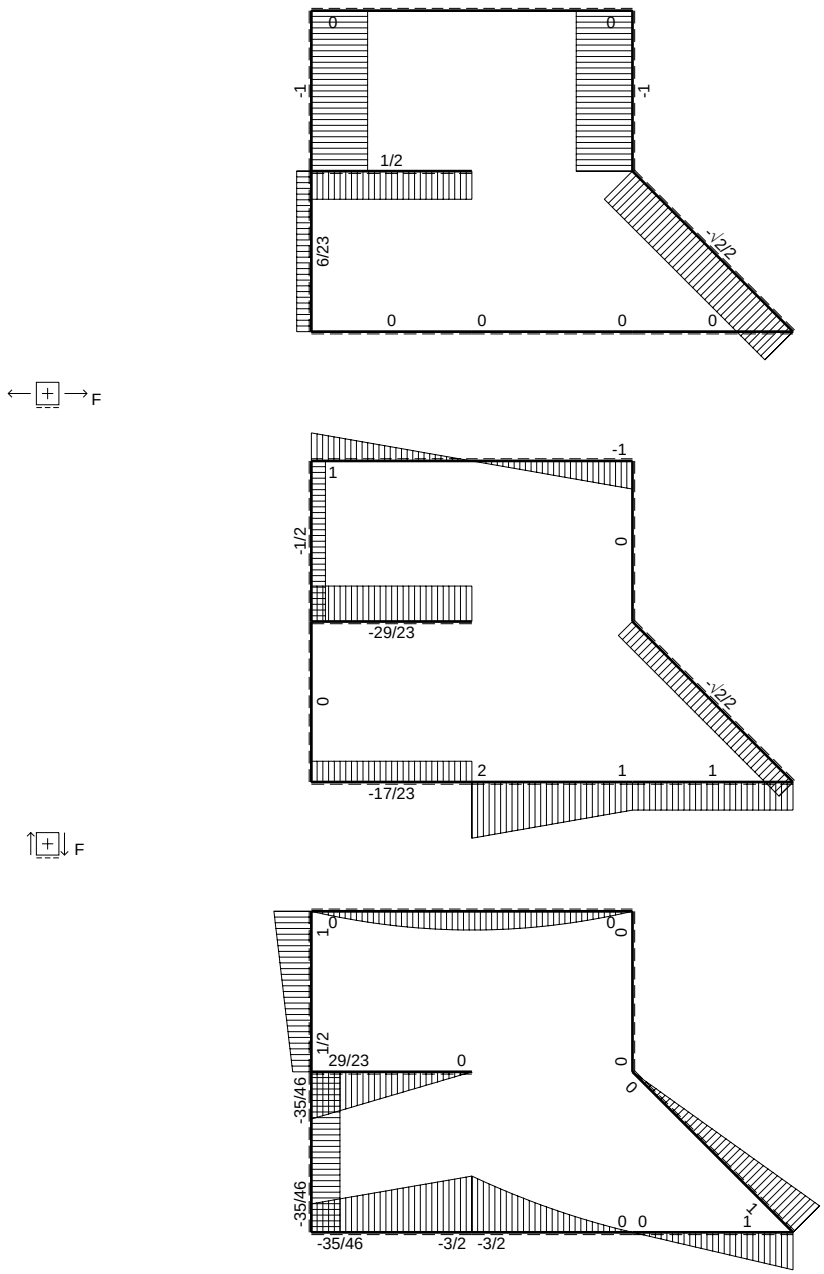
0
0
-1
-1
1/2
6/23
-√2/2
0
0
0
0
F
-1
1
-1/2
0
-29/23
-√2/2
0
2
1
1
-17/23
F
1
0
0
1/2
29/23
0
-35/46
0
0
-35/46
0
0
1
-1
-35/46
-3/2
-3/2
Fb

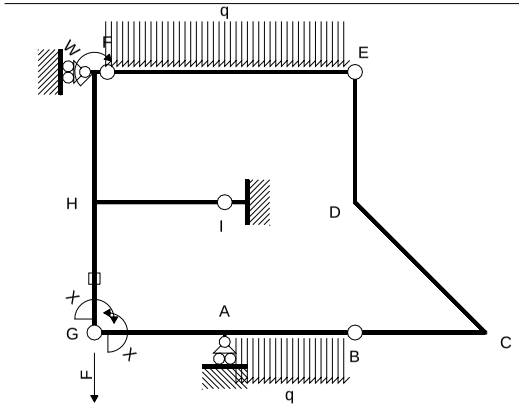

Schema di calcolo iperstatico

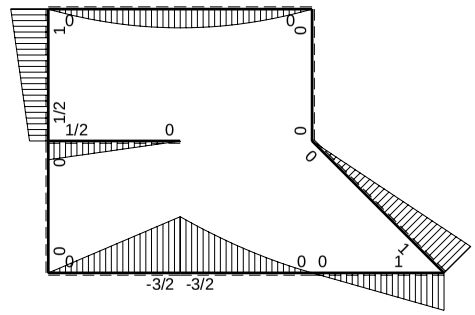

M_0 flessione da carichi assegnati

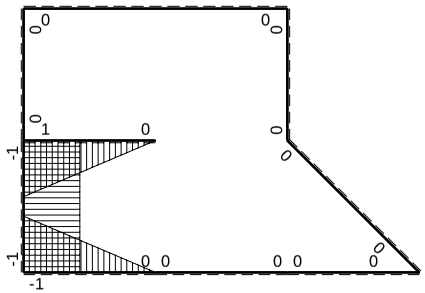

M_x flessione da iperstatica X=1

Quadro contributi PLV per iperstatica $X=W_{GA}$

→	$M_x(x)$	$M_0(x)$	M_xM_0	M_xM_x	$\int M_xM_0/EJdx$	$\int XM_xM_x/EJdx$
AB b	0	$-3/2Fb+2Fx-1/2qx^2$	0	0	0	0
BA b	0	$Fx+1/2qx^2$	0	0		
BC b	0	Fx	0	0	0	0
CB b	0	$-Fb+Fx$	0	0		
CD $\sqrt{2}b$	0	$Fb-\sqrt{2}/2Fx$	0	0	0	0
DE b	0	0	0	0	0	0
ED b	0	0	0	0		
EF 2b	0	$-Fx+1/2qx^2$	0	0	0	0
FE 2b	0	$Fx-1/2qx^2$	0	0		
GA b	-1+x/b	-3/2Fx	$3/2Fx-3/2Fx^2/b$	$1-2x/b+x^2/b^2$	$1/4Fb^2/EJ$	1/3Xb/EJ
AG b	x/b	3/2Fb-3/2Fx	$3/2Fx-3/2Fx^2/b$	x^2/b^2		
FH b	0	Fb-1/2Fx	0	0	0	0
HF b	0	-1/2Fb-1/2Fx	0	0		
HI b	1-x/b	1/2Fb-1/2Fx	$1/2Fb-Fx+1/2Fx^2/b$	$1-2x/b+x^2/b^2$	$1/6Fb^2/EJ$	1/3Xb/EJ
IH b	-x/b	-1/2Fx	$1/2Fx^2/b$	x^2/b^2		
HG b	-1	0	0	1	0	Xb/EJ
GH b	1	0	0	1		
HG	elongazione asta $N_{1HG}\varepsilon_{HG}L_{HG}$				$-Fb^2/EJ$	
A	molla nodo $-V_{1A}(V_{0A}+XV_{1A})/k_A$				$-7/8Fb^2/EJ$	1/4Xb/EJ
	totali				$-35/24Fb^2/EJ$	23/12Xb/EJ
	iperstatica $X=W_{GA}$				35/46Fb	

Sviluppi di calcolo iperstatica

$L^{XX}_{GA} = \int_o^b (1 - 2\,x/b + x^2/b^2)\ 1/EJ\ dx = [\,x - x^2/b + 1/3\,x^3/b^2\,]_o^b\ 1/EJ$

$= (\,b - b + 1/3\,b\,)\ 1/EJ = 1/3\ b/EJ$

$L^{XX}_{AG} = \int_o^b (\,x^2/b^2\,)\ 1/EJ\ dx = [1/3\,x^3/b^2\,]_o^b\ 1/EJ$

$= (1/3\,b\,)\ 1/EJ = 1/3\ b/EJ$

$L^{XX}_{HI} = \int_o^b (1 - 2\,x/b + x^2/b^2)\ 1/EJ\ dx = [\,x - x^2/b + 1/3\,x^3/b^2\,]_o^b\ 1/EJ$

$= (\,b - b + 1/3\,b\,)\ 1/EJ = 1/3\ b/EJ$

$L^{XX}_{IH} = \int_o^b (\,x^2/b^2\,)\ 1/EJ\ dx = [1/3\,x^3/b^2\,]_o^b\ 1/EJ$

$= (1/3\,b\,)\ 1/EJ = 1/3\ b/EJ$

$L^{XX}_{HG} = \int_o^b (1)\ 1/EJ\ dx = [\,x\,]_o^b\ 1/EJ$

$= (\,b\,)\ 1/EJ = b/EJ$

$L^{XX}_{GH} = \int_o^b (1)\ 1/EJ\ dx = [\,x\,]_o^b\ 1/EJ$

$= (\,b\,)\ 1/EJ = b/EJ$

$L^{Xo}_{GA} = \int_o^b (3/2\,x/b - 3/2\,x^2/b^2)\ Fb\ 1/EJ\ dx = [3/4\,x^2/b - 1/2\,x^3/b^2\,]_o^b\ Fb\ 1/EJ$

$= (3/4\,b - 1/2\,b\,)\ Fb\ 1/EJ = 1/4\ Fb^2/EJ$

$L^{Xo}_{AG} = \int_o^b (3/2\,x/b - 3/2\,x^2/b^2)\ Fb\ 1/EJ\ dx = [3/4\,x^2/b - 1/2\,x^3/b^2\,]_o^b\ Fb\ 1/EJ$

$= (3/4\,b - 1/2\,b\,)\ Fb\ 1/EJ = 1/4\ Fb^2/EJ$

$L^{Xo}_{HI} = \int_o^b (1/2 - x/b + 1/2\,x^2/b^2)\ Fb\ 1/EJ\ dx = [1/2\,x - 1/2\,x^2/b + 1/6\,x^3/b^2\,]_o^b\ Fb\ 1/EJ$

$= (1/2\,b - 1/2\,b + 1/6\,b\,)\ Fb\ 1/EJ = 1/6\ Fb^2/EJ$

$L^{Xo}_{IH} = \int_o^b (1/2\,x^2/b^2\,)\ Fb\ 1/EJ\ dx = [1/6\,x^3/b^2\,]_o^b\ Fb\ 1/EJ$

$= (1/6\,b\,)\ Fb\ 1/EJ = 1/6\ Fb^2/EJ$

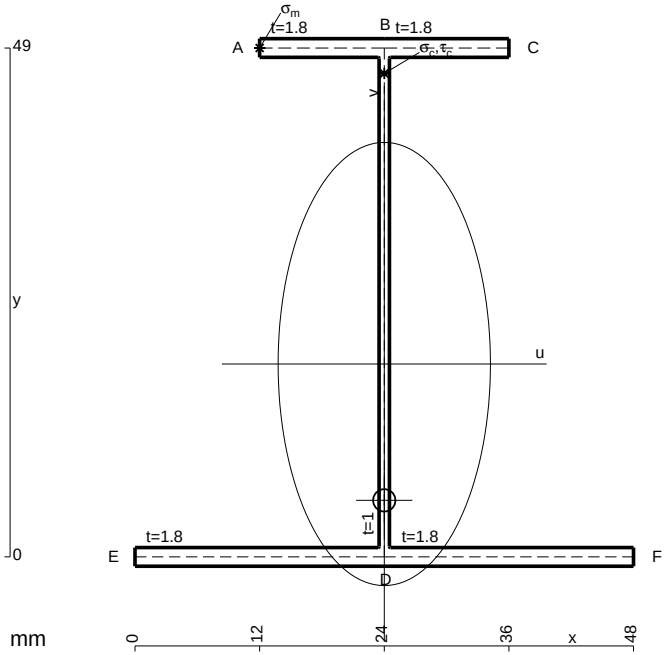

A = 178.6 mm^2
J_u = 81324. mm^4
J_v = 18662. mm^4
J_t = 156.3 mm^4
y_o = -13.13 mm
y_g = 18.57 mm
T_y = 1620. N
M_x = -558900. Nmm
x_m = 12. mm
y_m = 49. mm
u_m = -12. mm
v_m = 30.43 mm
$\sigma_m = -Mv/J_u$ = 209.1 N/mm^2
x_c = 24. mm
y_c = 49. mm
v_c = 30.43 mm
$\sigma_c = -Mv/J_u$ = 209.1 N/mm^2
$\tau_c = TS^*/tJ_u$ = 26.18 N/mm^2
$\tau_g = TS^*/tJ_u$ = 26.18 N/mm^2
t_c = 810. mm
$\sigma_o = \sqrt{\sigma^2 + 3\tau^2}$ = 214. N/mm^2

ESΣ05.xxxx.071

@ Adolfo Zavelani Rossi, Politecnico di Milano, vers.27.03.13 01.12.25

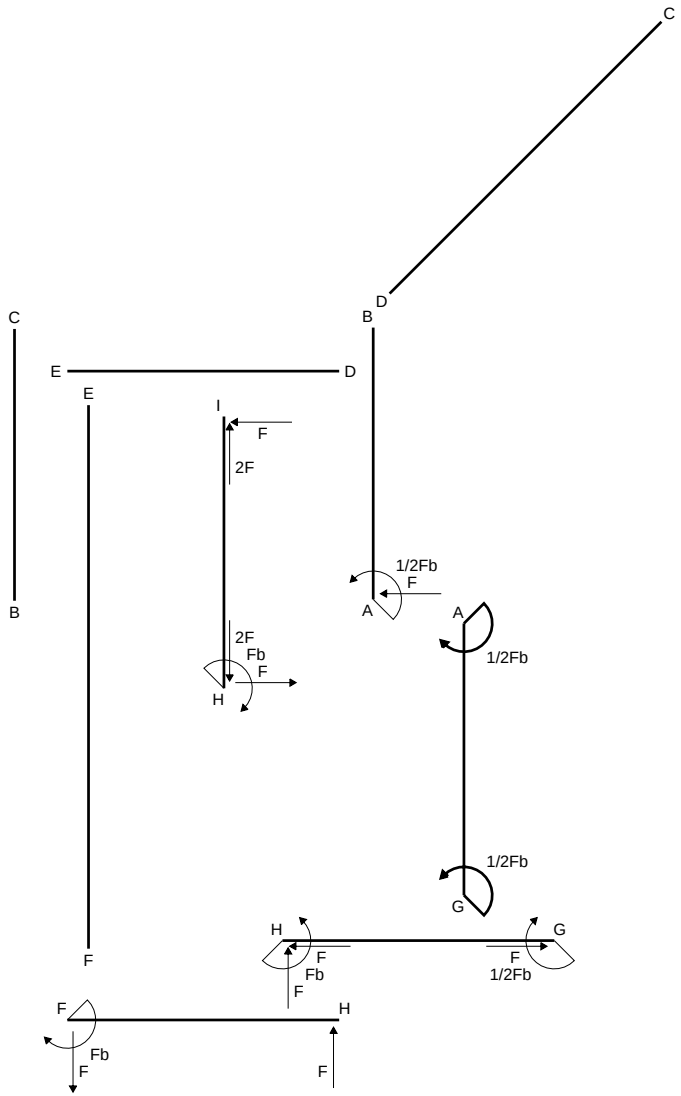
C
B
D
C
E
D
E
I
F
2F
1/2Fb
F
A
A
1/2Fb
2F
Fb
F
H
1/2Fb
G
H
G
F
F
Fb
F
F
1/2Fb
F
H
F
Fb
F
F

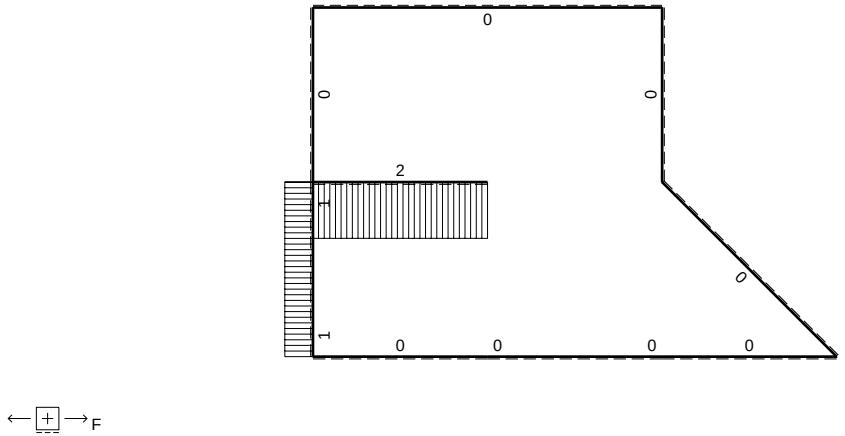
0
0
0
2
1
0
1
0
0
0
0

F

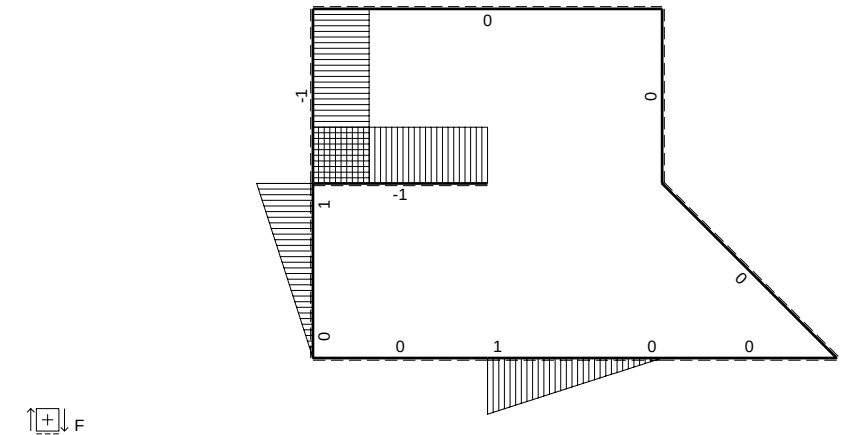
0
-1
0
-1
1
0
0
1
0
0

F

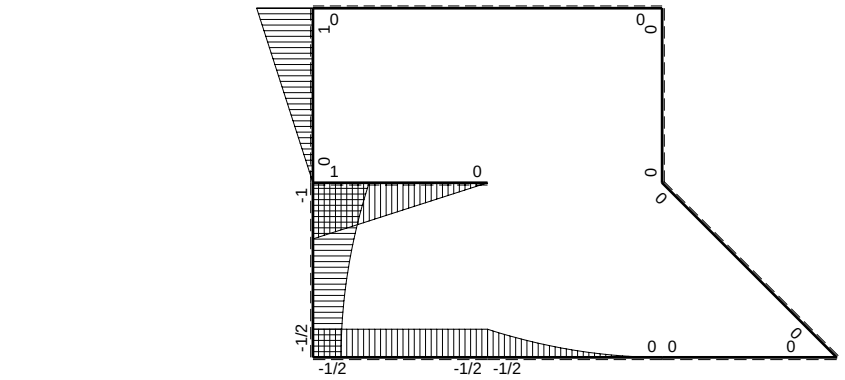
1
0
0
0
1
0
-1
0
0
-1/2
0 0
0
-1/2
-1/2 -1/2

Fb

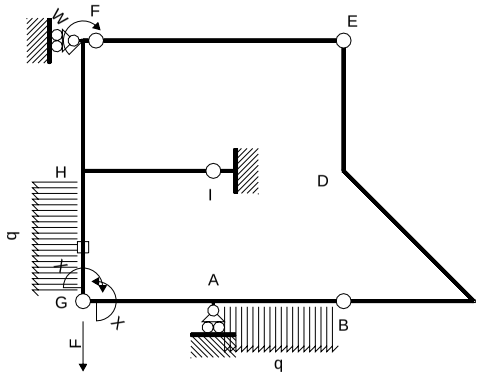

Schema di calcolo iperstatico

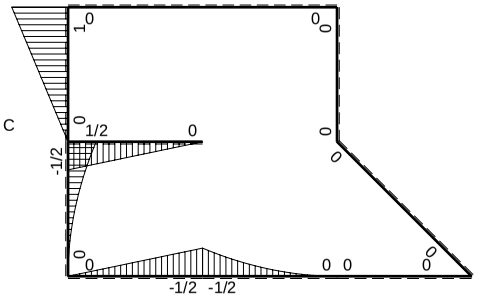

M_0 flessione da carichi assegnati

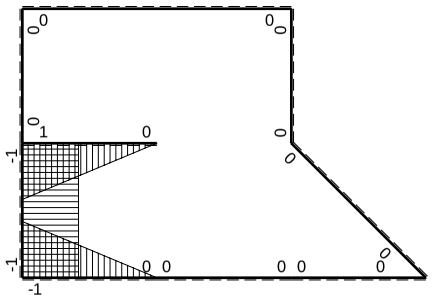

M_x flessione da iperstatica X=1

Quadro contributi PLV per iperstatica $X=W_{GA}$

→	$M_x(x)$	$M_o(x)$	M_xM_o	M_xM_x	$\int M_xM_o/EJdx$	$\int XM_xM_x/EJdx$
AB b	0	$-1/2Fb+Fx-1/2qx^2$	0	0	0	0
BA b	0	$1/2qx^2$	0	0		
BC b	0	0	0	0	0	0
CB b	0	0	0	0		
CD $\sqrt{2}$b	0	0	0	0	0	0
DE b	0	0	0	0	0	0
ED b	0	0	0	0		
EF 2b	0	0	0	0	0	0
FE 2b	0	0	0	0		
GA b	$-1+x/b$	$-1/2Fx$	$1/2Fx-1/2Fx^2/b$	$1-2x/b+x^2/b^2$	$1/12Fb^2/EJ$	$1/3Xb/EJ$
AG b	x/b	$1/2Fb-1/2Fx$	$1/2Fx-1/2Fx^2/b$	x^2/b^2		
FH b	0	$Fb-Fx$	0	0	0	0
HF b	0	$-Fx$	0	0		
HI b	$1-x/b$	$1/2Fb-1/2Fx$	$1/2Fb-Fx+1/2Fx^2/b$	$1-2x/b+x^2/b^2$	$1/6Fb^2/EJ$	$1/3Xb/EJ$
IH b	$-x/b$	$-1/2Fx$	$1/2Fx^2/b$	x^2/b^2		
HG b	-1	$-1/2Fb+Fx-1/2qx^2$	$1/2Fb-Fx+1/2Fx^2/b$	1	$1/6Fb^2/EJ$	Xb/EJ
GH b	1	$1/2qx^2$	$1/2Fx^2/b$	1		
HG	elongazione asta $N_{1HG}\varepsilon_{HG}L_{HG}$				$-Fb^2/EJ$	
A	molla nodo $-V_{1A}(V_{0A}+XV_{1A})/k_A$				$-3/8Fb^2/EJ$	$1/4Xb/EJ$
	totali				$-23/24Fb^2/EJ$	$23/12Xb/EJ$
	iperstatica $X=W_{GA}$				1/2Fb	

Sviluppi di calcolo iperstatica

$L^{XX}_{GA} = \int_o^b (1 - 2\,x/b + x^2/b^2)\ 1/EJ\ dx = [\,x - x^2/b + 1/3\,x^3/b^2\,]_o^b\ 1/EJ$

$= (\,b - b + 1/3\,b\,)\ 1/EJ = 1/3\ b/EJ$

$L^{XX}_{AG} = \int_o^b (\,x^2/b^2\,)\ 1/EJ\ dx = [1/3\,x^3/b^2\,]_o^b\ 1/EJ$

$= (1/3\,b)\ 1/EJ = 1/3\ b/EJ$

$L^{XX}_{HI} = \int_o^b (1 - 2\,x/b + x^2/b^2)\ 1/EJ\ dx = [\,x - x^2/b + 1/3\,x^3/b^2\,]_o^b\ 1/EJ$

$= (\,b - b + 1/3\,b\,)\ 1/EJ = 1/3\ b/EJ$

$L^{XX}_{IH} = \int_o^b (\,x^2/b^2\,)\ 1/EJ\ dx = [1/3\,x^3/b^2\,]_o^b\ 1/EJ$

$= (1/3\,b)\ 1/EJ = 1/3\ b/EJ$

$L^{XX}_{HG} = \int_o^b (1)\ 1/EJ\ dx = [\,x\,]_o^b\ 1/EJ$

$= (\,b\,)\ 1/EJ = b/EJ$

$L^{XX}_{GH} = \int_o^b (1)\ 1/EJ\ dx = [\,x\,]_o^b\ 1/EJ$

$= (\,b\,)\ 1/EJ = b/EJ$

$L^{Xo}_{GA} = \int_o^b (1/2\,x/b - 1/2\,x^2/b^2)\ Fb\ 1/EJ\ dx = [1/4\,x^2/b - 1/6\,x^3/b^2\,]_o^b\ Fb\ 1/EJ$

$= (1/4\,b - 1/6\,b)\ Fb\ 1/EJ = 1/12\ Fb^2/EJ$

$L^{Xo}_{AG} = \int_o^b (1/2\,x/b - 1/2\,x^2/b^2)\ Fb\ 1/EJ\ dx = [1/4\,x^2/b - 1/6\,x^3/b^2\,]_o^b\ Fb\ 1/EJ$

$= (1/4\,b - 1/6\,b)\ Fb\ 1/EJ = 1/12\ Fb^2/EJ$

$L^{Xo}_{HI} = \int_o^b (1/2 - x/b + 1/2\,x^2/b^2)\ Fb\ 1/EJ\ dx = [1/2\,x - 1/2\,x^2/b + 1/6\,x^3/b^2\,]_o^b\ Fb\ 1/EJ$

$= (1/2\,b - 1/2\,b + 1/6\,b)\ Fb\ 1/EJ = 1/6\ Fb^2/EJ$

$L^{Xo}_{IH} = \int_o^b (1/2\,x^2/b^2)\ Fb\ 1/EJ\ dx = [1/6\,x^3/b^2\,]_o^b\ Fb\ 1/EJ$

$= (1/6\,b)\ Fb\ 1/EJ = 1/6\ Fb^2/EJ$

$L^{Xo}_{HG} = \int_o^b (1/2 - x/b + 1/2\,x^2/b^2)\ Fb\ 1/EJ\ dx - 1\ \ (-1)\ \ (-1)\ \ Fb^2/EJ$

$= [1/2\,x - 1/2\,x^2/b + 1/6\,x^3/b^2\,]_o^b\ Fb\ 1/EJ\ -\ 1\ \ (-1)\ \ (-1)\ \ Fb^2/EJ$

$= (1/2\,b - 1/2\,b + 1/6\,b)\ Fb\ 1/EJ\ -\ 1\ \ (-1)\ \ (-1)\ \ Fb^2/EJ = -5/6\ \ Fb^2/EJ$

$L^{Xo}_{GH} = \int_o^b (1/2\,x^2/b^2)\ Fb\ 1/EJ\ dx - 1\ \ (-1)\ \ (-1)\ \ Fb^2/EJ = [1/6\,x^3/b^2\,]_o^b\ Fb\ 1/EJ\ -\ 1\ \ (-1)\ \ (-1)\ \ Fb^2/EJ$

$= (1/6\,b)\ Fb\ 1/EJ\ -\ 1\ \ (-1)\ \ (-1)\ \ Fb^2/EJ = -5/6\ \ Fb^2/EJ$

PROCEDIMENTO E RISULTATI 957197 ESΣ05.xxxx.072

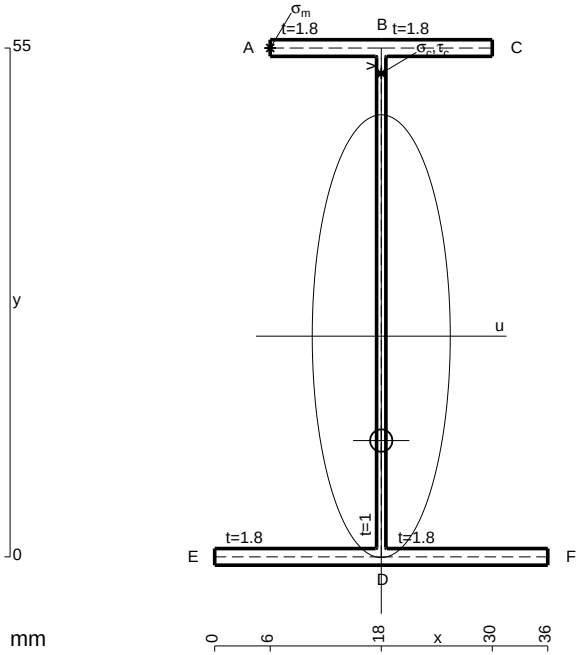

A = 163. mm^2
J_u = 93375. mm^4
J_v = 9072. mm^4
J_t = 135. mm^4
y_o = -11.28 mm
y_g = 23.86 mm
T_y = -1170. N
M_x = 655200. Nmm
x_m = 6. mm
y_m = 55. mm
u_m = -12. mm
v_m = 31.14 mm
$\sigma_m = -Mv/J_u$ = -218.5 N/mm^2
x_c = 18. mm
y_c = 55. mm
v_c = 31.14 mm
$\sigma_c = -Mv/J_u$ = -218.5 N/mm^2
$\tau_c = TS^*/tJ_u$ = 16.86 N/mm^2
$\tau_g = TS^*/tJ_u$ = 16.86 N/mm^2
t_c = 1170. mm
$\sigma_o = \sqrt{\sigma^2 + 3\tau^2}$ = 220.5 N/mm^2

@ Adolfo Zavelani Rossi, Politecnico di Milano, vers.27.03.13 01.12.25

ESΣ05.xxxx.072

@ Adolfo Zavelani Rossi, Politecnico di Milano, vers.27.03.13 01.12.25

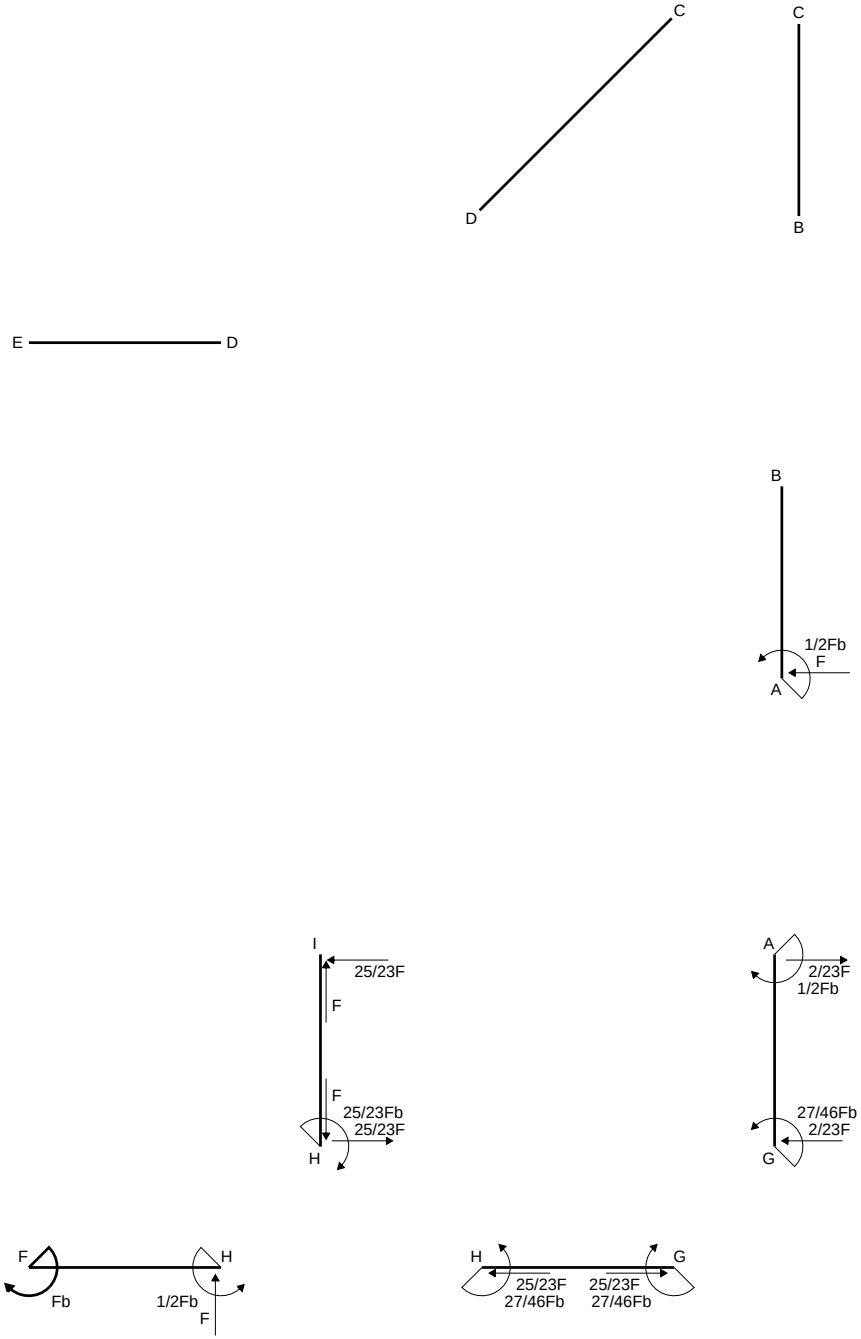
C
D
C
B
E
D
E
F
B
1/2Fb
F
A
I
25/23F
F
F
25/23Fb
25/23F
H
A
2/23F
1/2Fb
27/46Fb
2/23F
G
F
Fb
H
1/2Fb
F
H
G
25/23F
27/46Fb
25/23F
27/46Fb

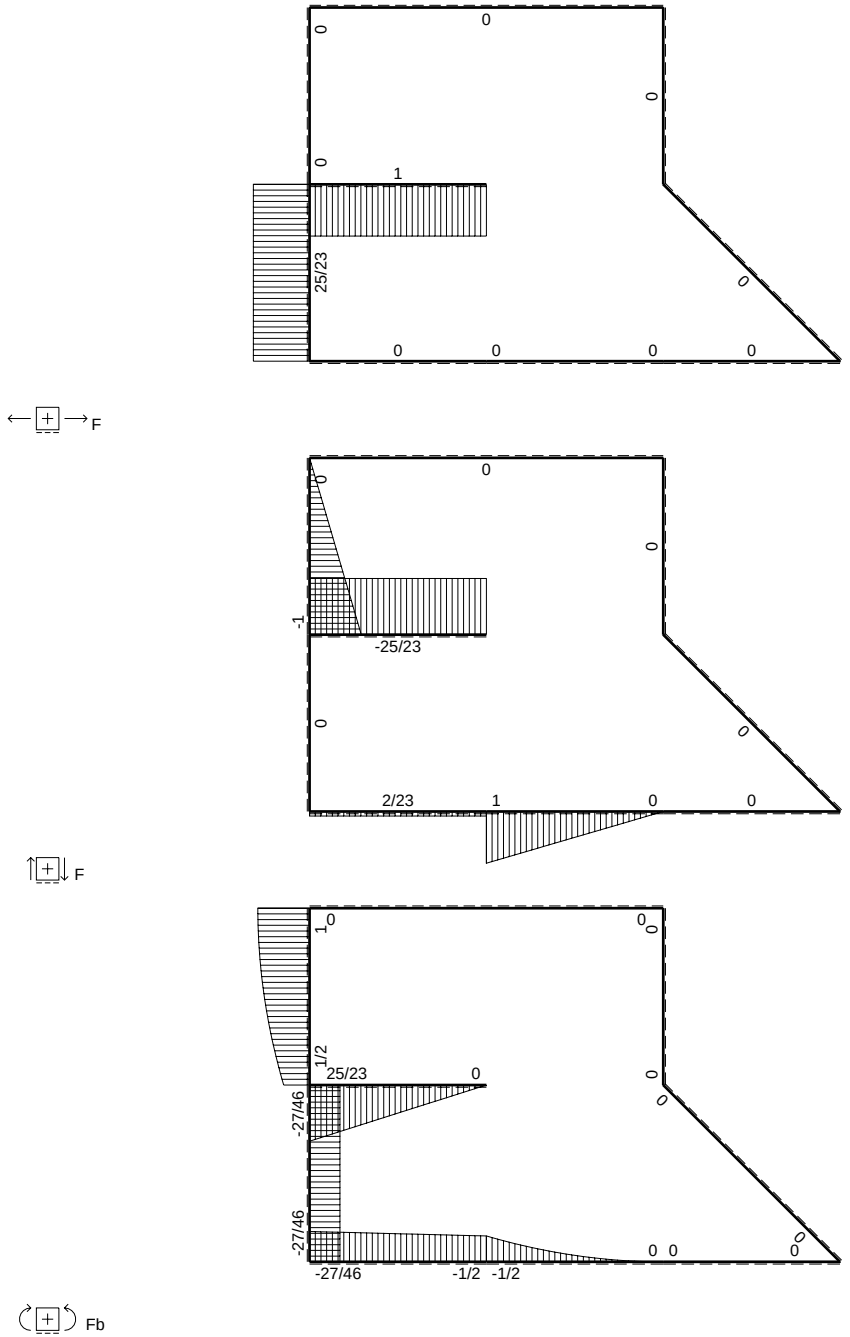
0
0
0
0
1
25/23
0
0
0
0
0
F
0
0
0
-1
-25/23
0
0
2/23
1
0
0
F
1
0
0
0
1/2
25/23
0
0
0
-27/46
-27/46
0 0
0
-27/46
-1/2 -1/2
Fb

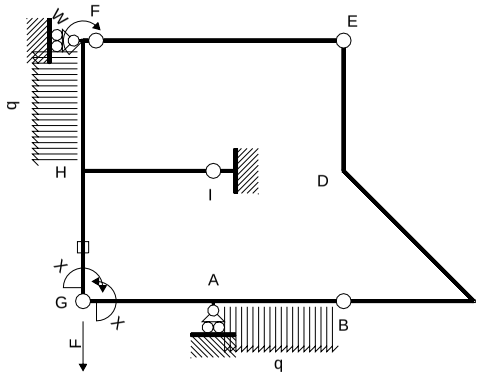

Schema di calcolo iperstatico

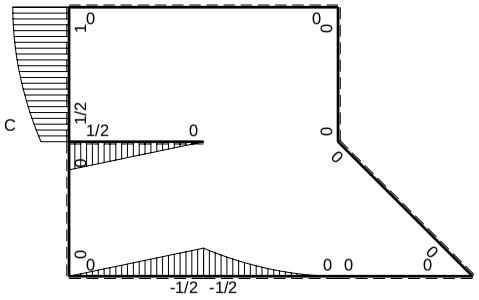

M_0 flessione da carichi assegnati

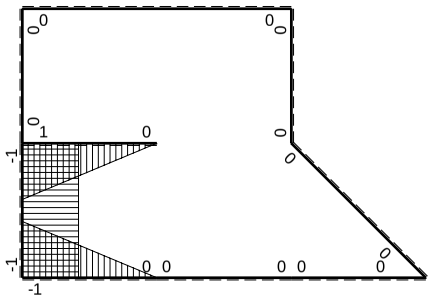

M_x flessione da iperstatica X=1

Quadro contributi PLV per iperstatica $X=W_{GA}$

→	$M_x(x)$	$M_o(x)$	M_xM_o	M_xM_x	$\int M_xM_o/EJdx$	$\int XM_xM_x/EJdx$
AB b	0	$-1/2Fb+Fx-1/2qx^2$	0	0	0	0
BA b	0	$1/2qx^2$	0	0		
BC b	0	0	0	0	0	0
CB b	0	0	0	0		
CD √2b	0	0	0	0	0	0
DE b	0	0	0	0	0	0
ED b	0	0	0	0		
EF 2b	0	0	0	0	0	0
FE 2b	0	0	0	0		
GA b	-1+x/b	-1/2Fx	$1/2Fx-1/2Fx^2/b$	$1-2x/b+x^2/b^2$	$1/12Fb^2/EJ$	$1/3Xb/EJ$
AG b	x/b	1/2Fb-1/2Fx	$1/2Fx-1/2Fx^2/b$	x^2/b^2		
FH b	0	$Fb-1/2qx^2$	0	0	0	0
HF b	0	$-1/2Fb-Fx+1/2qx^2$	0	0		
HI b	1-x/b	1/2Fb-1/2Fx	$1/2Fb-Fx+1/2Fx^2/b$	$1-2x/b+x^2/b^2$	$1/6Fb^2/EJ$	$1/3Xb/EJ$
IH b	-x/b	-1/2Fx	$1/2Fx^2/b$	x^2/b^2		
HG b	-1	0	0	1	0	Xb/EJ
GH b	1	0	0	1		
HG	elongazione asta $N_{1HG}\varepsilon_{HG}L_{HG}$				$-Fb^2/EJ$	
A	molla nodo $-V_{1A}(V_{0A}+XV_{1A})/k_A$				$-3/8Fb^2/EJ$	$1/4Xb/EJ$
	totali				$-9/8Fb^2/EJ$	$23/12Xb/EJ$
	iperstatica $X=W_{GA}$				27/46Fb	

Sviluppi di calcolo iperstatica

$L^{XX}_{GA} = \int_o^b (1 - 2\,x/b + x^2/b^2)\ 1/EJ\ dx = [\,x - x^2/b + 1/3\,x^3/b^2\,]_o^b\ 1/EJ$

$= (\,b - b + 1/3\,b\,)\ 1/EJ = 1/3\ b/EJ$

$L^{XX}_{AG} = \int_o^b (\,x^2/b^2\,)\ 1/EJ\ dx = [1/3\,x^3/b^2\,]_o^b\ 1/EJ$

$= (1/3\,b\,)\ 1/EJ = 1/3\ b/EJ$

$L^{XX}_{HI} = \int_o^b (1 - 2\,x/b + x^2/b^2)\ 1/EJ\ dx = [\,x - x^2/b + 1/3\,x^3/b^2\,]_o^b\ 1/EJ$

$= (\,b - b + 1/3\,b\,)\ 1/EJ = 1/3\ b/EJ$

$L^{XX}_{IH} = \int_o^b (\,x^2/b^2\,)\ 1/EJ\ dx = [1/3\,x^3/b^2\,]_o^b\ 1/EJ$

$= (1/3\,b\,)\ 1/EJ = 1/3\ b/EJ$

$L^{XX}_{HG} = \int_o^b (1)\ 1/EJ\ dx = [\,x\,]_o^b\ 1/EJ$

$= (\,b\,)\ 1/EJ = b/EJ$

$L^{XX}_{GH} = \int_o^b (1)\ 1/EJ\ dx = [\,x\,]_o^b\ 1/EJ$

$= (\,b\,)\ 1/EJ = b/EJ$

$L^{Xo}_{GA} = \int_o^b (1/2\,x/b - 1/2\,x^2/b^2)\ Fb\ 1/EJ\ dx = [1/4\,x^2/b - 1/6\,x^3/b^2\,]_o^b\ Fb\ 1/EJ$

$= (1/4\,b - 1/6\,b\,)\ Fb\ 1/EJ = 1/12\ Fb^2/EJ$

$L^{Xo}_{AG} = \int_o^b (1/2\,x/b - 1/2\,x^2/b^2\,)\ Fb\ 1/EJ\ dx = [1/4\,x^2/b - 1/6\,x^3/b^2\,]_o^b\ Fb\ 1/EJ$

$= (1/4\,b - 1/6\,b\,)\ Fb\ 1/EJ = 1/12\ Fb^2/EJ$

$L^{Xo}_{HI} = \int_o^b (1/2 - x/b + 1/2\,x^2/b^2\,)\ Fb\ 1/EJ\ dx = [1/2\,x - 1/2\,x^2/b + 1/6\,x^3/b^2\,]_o^b\ Fb\ 1/EJ$

$= (1/2\,b - 1/2\,b + 1/6\,b\,)\ Fb\ 1/EJ = 1/6\ Fb^2/EJ$

$L^{Xo}_{IH} = \int_o^b (1/2\,x^2/b^2\,)\ Fb\ 1/EJ\ dx = [1/6\,x^3/b^2\,]_o^b\ Fb\ 1/EJ$

$= (1/6\,b\,)\ Fb\ 1/EJ = 1/6\ Fb^2/EJ$

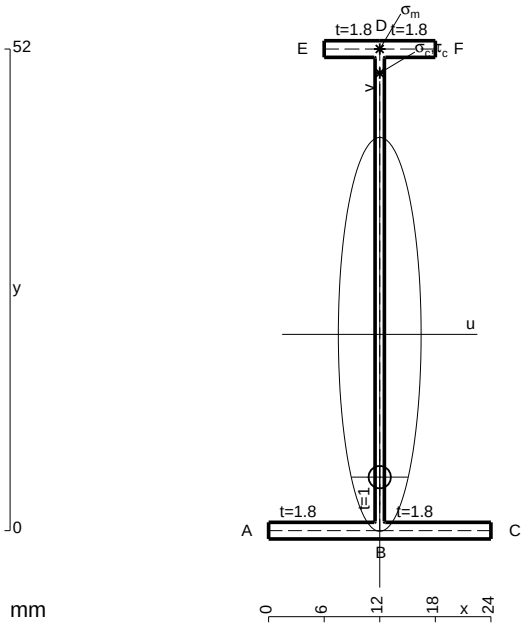

A = 116.8 mm^2
J_u = 52822. mm^4
J_v = 2333. mm^4
J_t = 87.32 mm^4
y_o = -15.41 mm
y_g = 21.19 mm
T_y = 1380. N
M_x = -393300. Nmm
x_m = 12. mm
y_m = 52. mm
v_m = 30.81 mm
$\sigma_m = -Mv/J_u$ = 229.4 N/mm^2
y_c = 2. mm
u_c = -12. mm
v_c = -19.19 mm
$\sigma_c = -Mv/J_u$ = 229.4 N/mm^2
$\tau_c = TS^*/tJ_u$ = 17.39 N/mm^2
$\tau_g = TS^*/tJ_u$ = 17.39 N/mm^2
t_c = 1380. mm
$\sigma_o = \sqrt{\sigma^2 + 3\tau^2}$ = 231.4 N/mm^2

ESΣ05.xxxx.073

@ Adolfo Zavelani Rossi, Politecnico di Milano, vers.27.03.13 01.12.25

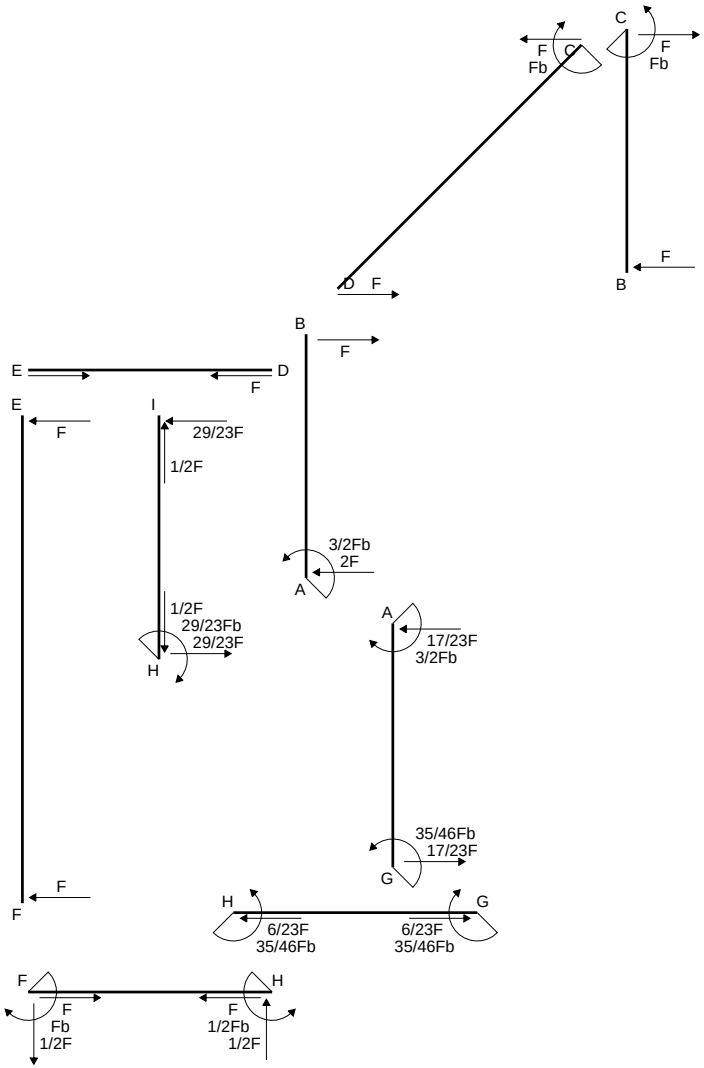
C
F
Fb
C
F
Fb
F
D
F
B
B
F
E
D
F
E
F
I
29/23F
1/2F
3/2Fb
2F
A
1/2F
29/23Fb
29/23F
H
A
17/23F
3/2Fb
35/46Fb
17/23F
G
F
F
H
G
6/23F
35/46Fb
6/23F
35/46Fb
F
H
F
Fb
1/2F
F
1/2Fb
1/2F

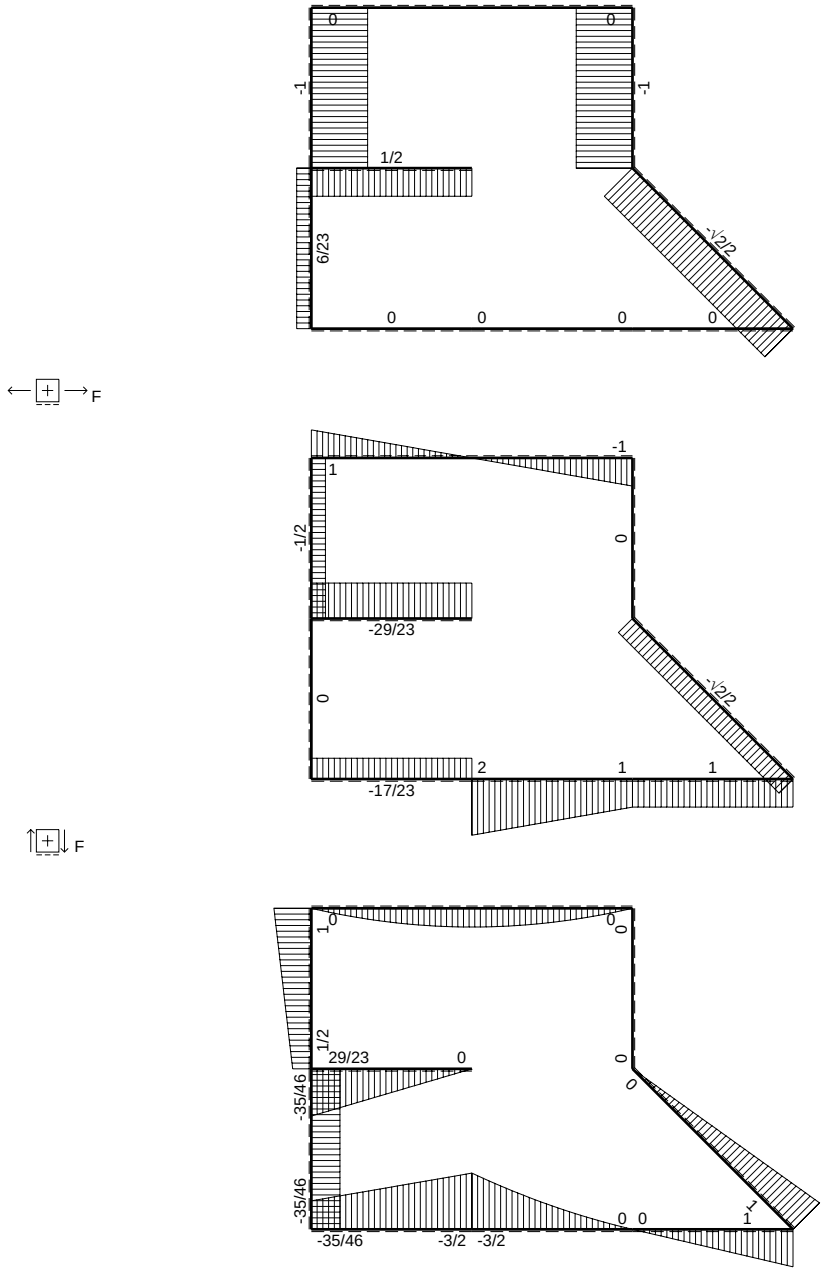
0
0
-1
-1
1/2
6/23
-½/2
0
0
0
0
F
-1
1
-1/2
0
-29/23
0
-½/2
2
1
1
-17/23
F
0
0
1
0
0
1/2
29/23
0
-35/46
0
0
-35/46
0 0
1
-1
-35/46
-3/2
-3/2
Fb

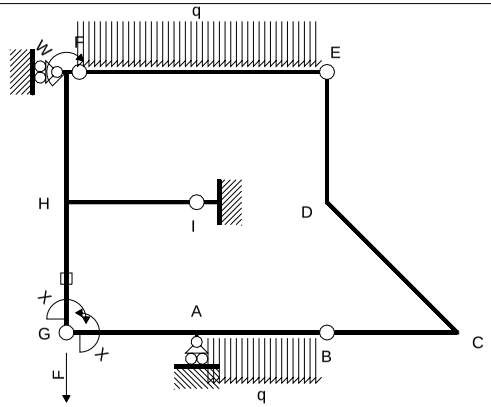

Schema di calcolo iperstatico

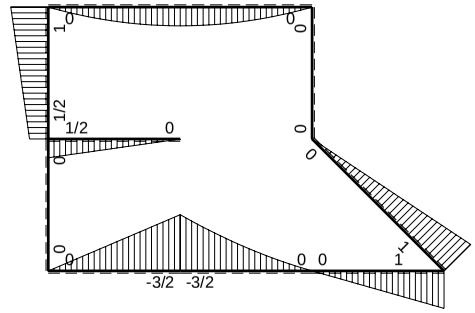

M_0 flessione da carichi assegnati

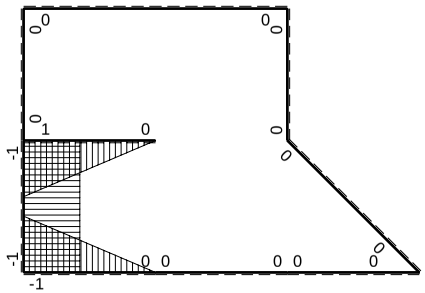

M_x flessione da iperstatica X=1

Quadro contributi PLV per iperstatica $X=W_{GA}$

→	$M_x(x)$	$M_0(x)$	M_xM_0	M_xM_x	$\int M_xM_0/EJdx$	$\int XM_xM_x/EJdx$
AB b	0	$-3/2Fb+2Fx-1/2qx^2$	0	0	0	0
BA b	0	$Fx+1/2qx^2$	0	0		
BC b	0	Fx	0	0	0	0
CB b	0	$-Fb+Fx$	0	0		
CD $\sqrt{2}b$	0	$Fb-\sqrt{2}/2Fx$	0	0	0	0
DE b	0	0	0	0	0	0
ED b	0	0	0	0		
EF 2b	0	$-Fx+1/2qx^2$	0	0	0	0
FE 2b	0	$Fx-1/2qx^2$	0	0		
GA b	-1+x/b	-3/2Fx	$3/2Fx-3/2Fx^2/b$	$1-2x/b+x^2/b^2$	$1/4Fb^2/EJ$	1/3Xb/EJ
AG b	x/b	3/2Fb-3/2Fx	$3/2Fx-3/2Fx^2/b$	x^2/b^2		
FH b	0	Fb-1/2Fx	0	0	0	0
HF b	0	-1/2Fb-1/2Fx	0	0		
HI b	1-x/b	1/2Fb-1/2Fx	$1/2Fb-Fx+1/2Fx^2/b$	$1-2x/b+x^2/b^2$	$1/6Fb^2/EJ$	1/3Xb/EJ
IH b	-x/b	-1/2Fx	$1/2Fx^2/b$	x^2/b^2		
HG b	-1	0	0	1	0	Xb/EJ
GH b	1	0	0	1		
HG	elongazione asta $N_{1HG}\varepsilon_{HG}L_{HG}$				$-Fb^2/EJ$	
A	molla nodo $-V_{1A}(V_{0A}+XV_{1A})/k_A$				$-7/8Fb^2/EJ$	1/4Xb/EJ
	totali				$-35/24Fb^2/EJ$	23/12Xb/EJ
	iperstatica $X=W_{GA}$				35/46Fb	

Sviluppi di calcolo iperstatica

$L^{XX}_{GA} = \int_o^b (1 - 2\,x/b + x^2/b^2)\ 1/EJ\ dx = [\,x - x^2/b + 1/3\,x^3/b^2\,]_o^b\ 1/EJ$

$= (\,b - b + 1/3\,b\,)\ 1/EJ = 1/3\ b/EJ$

$L^{XX}_{AG} = \int_o^b (\,x^2/b^2\,)\ 1/EJ\ dx = [1/3\,x^3/b^2\,]_o^b\ 1/EJ$

$= (1/3\,b)\ 1/EJ = 1/3\ b/EJ$

$L^{XX}_{HI} = \int_o^b (1 - 2\,x/b + x^2/b^2)\ 1/EJ\ dx = [\,x - x^2/b + 1/3\,x^3/b^2\,]_o^b\ 1/EJ$

$= (\,b - b + 1/3\,b\,)\ 1/EJ = 1/3\ b/EJ$

$L^{XX}_{IH} = \int_o^b (\,x^2/b^2\,)\ 1/EJ\ dx = [1/3\,x^3/b^2\,]_o^b\ 1/EJ$

$= (1/3\,b)\ 1/EJ = 1/3\ b/EJ$

$L^{XX}_{HG} = \int_o^b (1)\ 1/EJ\ dx = [\,x\,]_o^b\ 1/EJ$

$= (\,b\,)\ 1/EJ = b/EJ$

$L^{XX}_{GH} = \int_o^b (1)\ 1/EJ\ dx = [\,x\,]_o^b\ 1/EJ$

$= (\,b\,)\ 1/EJ = b/EJ$

$L^{Xo}_{GA} = \int_o^b (3/2\,x/b - 3/2\,x^2/b^2)\ Fb\ 1/EJ\ dx = [3/4\,x^2/b - 1/2\,x^3/b^2\,]_o^b\ Fb\ 1/EJ$

$= (3/4\,b - 1/2\,b)\ Fb\ 1/EJ = 1/4\ Fb^2/EJ$

$L^{Xo}_{AG} = \int_o^b (3/2\,x/b - 3/2\,x^2/b^2)\ Fb\ 1/EJ\ dx = [3/4\,x^2/b - 1/2\,x^3/b^2\,]_o^b\ Fb\ 1/EJ$

$= (3/4\,b - 1/2\,b)\ Fb\ 1/EJ = 1/4\ Fb^2/EJ$

$L^{Xo}_{HI} = \int_o^b (1/2 - x/b + 1/2\,x^2/b^2)\ Fb\ 1/EJ\ dx = [1/2\,x - 1/2\,x^2/b + 1/6\,x^3/b^2\,]_o^b\ Fb\ 1/EJ$

$= (1/2\,b - 1/2\,b + 1/6\,b)\ Fb\ 1/EJ = 1/6\ Fb^2/EJ$

$L^{Xo}_{IH} = \int_o^b (1/2\,x^2/b^2)\ Fb\ 1/EJ\ dx = [1/6\,x^3/b^2\,]_o^b\ Fb\ 1/EJ$

$= (1/6\,b)\ Fb\ 1/EJ = 1/6\ Fb^2/EJ$

PROCEDIMENTO E RISULTATI 237122 ESΣ05.xxxx.074

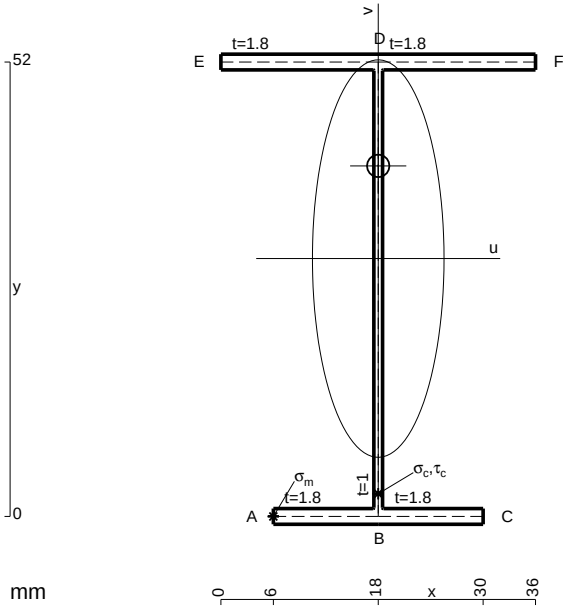

A = 160. mm^2
J_u = 82754. mm^4
J_v = 9072. mm^4
J_t = 134. mm^4
y_o = 10.6 mm
y_g = 29.51 mm
T_y = 1460. N
M_x = -667950. Nmm
x_m = 6. mm
u_m = -12. mm
v_m = -29.51 mm
$\sigma_m = -Mv/J_u$ = -238.2 N/mm^2
x_c = 18. mm
v_c = -29.51 mm
$\sigma_c = -Mv/J_u$ = -238.2 N/mm^2
$\tau_c = TS^*/tJ_u$ = 22.49 N/mm^2
$\tau_g = TS^*/tJ_u$ = 22.49 N/mm^2
t_c = 730. mm
$\sigma_o = \sqrt{\sigma^2 + 3\tau^2}$ = 241.4 N/mm^2

ESΣ05.xxxx.074

@ Adolfo Zavelani Rossi, Politecnico di Milano, vers.27.03.13 01.12.25

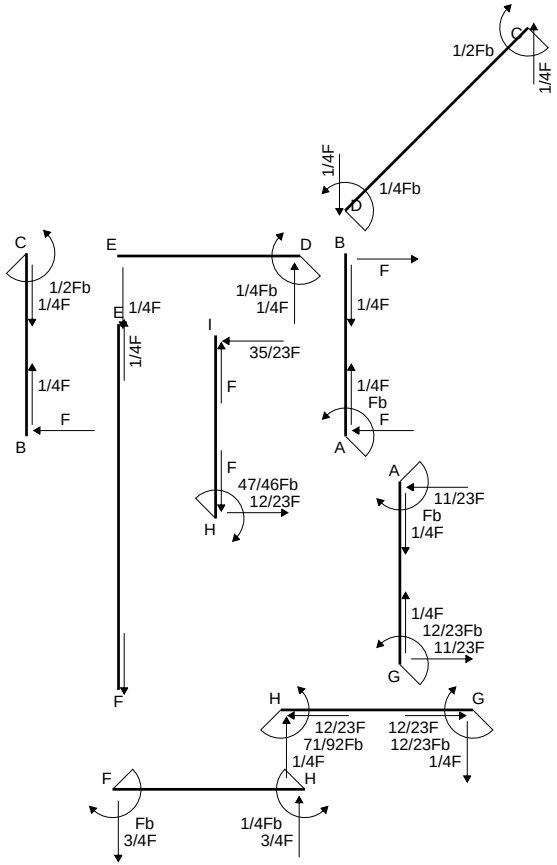
C
1/2Fb
1/4F
1/4F
1/4Fb
D
C
E
D
B
F
1/2Fb
1/4F
1/4Fb
1/4F
1/4F
E
1/4F
I
35/23F
1/4F
F
1/4F
Fb
F
F
B
A
F
47/46Fb
12/23F
H
A
11/23F
Fb
1/4F
1/4F
12/23Fb
11/23F
G
F
H
G
12/23F
71/92Fb
1/4F
12/23F
12/23Fb
1/4F
F
H
Fb
3/4F
1/4Fb
3/4F

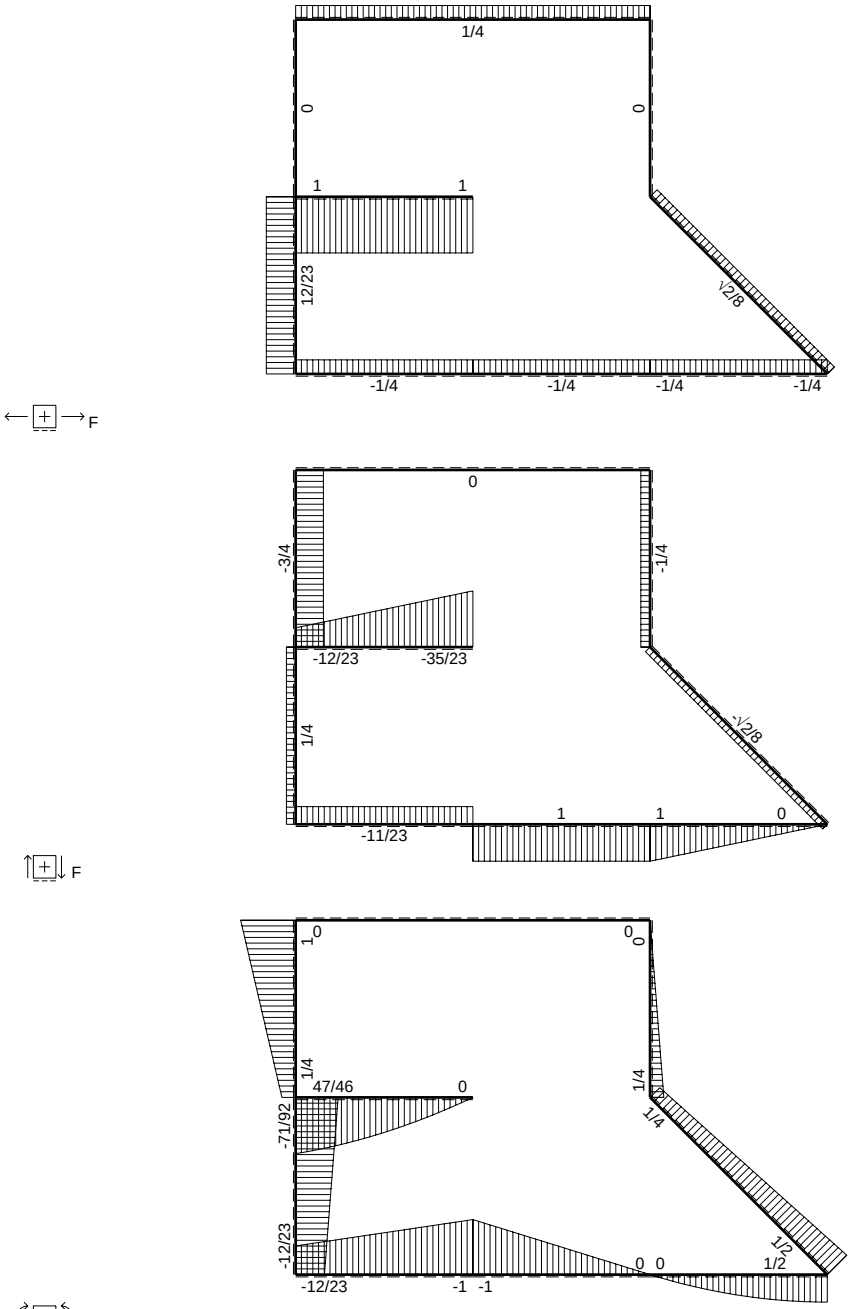
1/4
0
0
1
1
12/23
√2/8
-1/4
-1/4
-1/4
-1/4
F
0
-3/4
-1/4
-12/23
-35/23
1/4
-√2/8
1
1
0
-11/23
F
1
0
0
0
1/4
47/46
0
1/4
-71/92
1/4
-12/23
1/2
0
0
1/2
-12/23
-1
-1
Fb

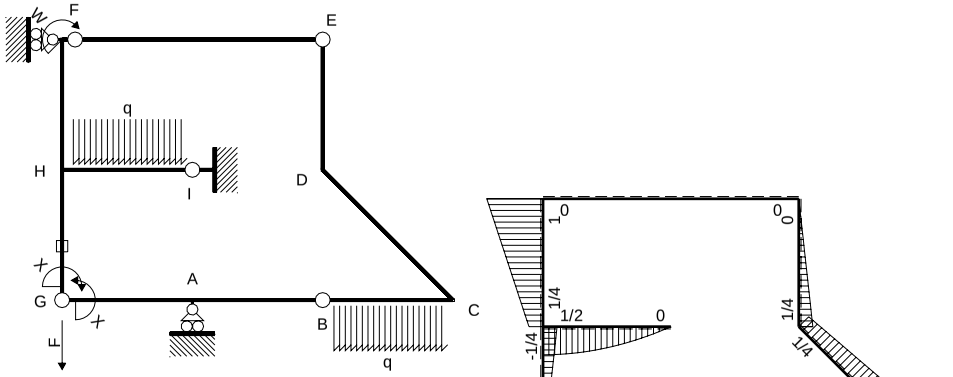

Schema di calcolo iperstatico

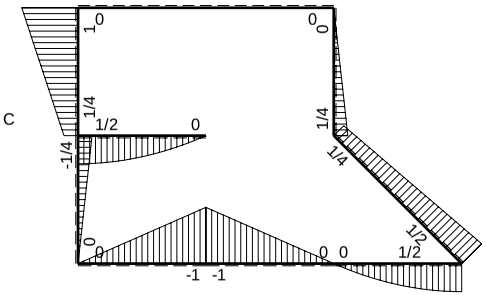

M_0 flessione da carichi assegnati

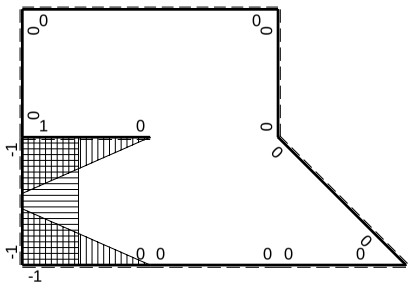

M_x flessione da iperstatica X=1

PROCEDIMENTO E RISULTATI 238160 ESΣ05.xxxx.075

@ Adolfo Zavelani Rossi, Politecnico di Milano, vers.27.03.13 01.12.25

Quadro contributi PLV per iperstatica $X=W_{GA}$

→	$M_x(x)$	$M_o(x)$	M_xM_o	M_xM_x	$\int M_xM_o/EJdx$	$\int XM_xM_x/EJdx$
AB b	0	-Fb+Fx	0	0	0	0
BA b	0	Fx	0	0		
BC b	0	$Fx-1/2qx^2$	0	0	0	0
CB b	0	$-1/2Fb+1/2qx^2$	0	0		
CD √2b	0	1/2Fb-√2/8Fx	0	0	0	0
DE b	0	1/4Fb-1/4Fx	0	0	0	0
ED b	0	-1/4Fx	0	0		
EF 2b	0	0	0	0	0	0
FE 2b	0	0	0	0		
GA b	-1+x/b	-Fx	$Fx-Fx^2/b$	$1-2x/b+x^2/b^2$	$1/6Fb^2/EJ$	1/3Xb/EJ
AG b	x/b	Fb-Fx	$Fx-Fx^2/b$	x^2/b^2		
FH b	0	Fb-3/4Fx	0	0	0	0
HF b	0	-1/4Fb-3/4Fx	0	0		
HI b	1-x/b	$1/2Fb-1/2qx^2$	$1/2Fb-1/2Fx-1/2Fx^2/b+1/2qx^3/b$	$1-2x/b+x^2/b^2$	$5/24Fb^2/EJ$	1/3Xb/EJ
IH b	-x/b	$-Fx+1/2qx^2$	$Fx^2/b-1/2qx^3/b$	x^2/b^2		
HG b	-1	-1/4Fb+1/4Fx	1/4Fb-1/4Fx	1	$1/8Fb^2/EJ$	Xb/EJ
GH b	1	1/4Fx	1/4Fx	1		
HG	elongazione asta $N_{1HG}\varepsilon_{HG}L_{HG}$				$-Fb^2/EJ$	
A	molla nodo $-V_{1A}(V_{oA}+XV_{1A})/k_A$				$-1/2Fb^2/EJ$	1/4Xb/EJ
	totali				$-Fb^2/EJ$	23/12Xb/EJ
	iperstatica $X=W_{GA}$				12/23Fb	

PROCEDIMENTO E RISULTATI 238160 ESΣ05.xxxx.075

Sviluppi di calcolo iperstatica

@ Adolfo Zavelani Rossi, Politecnico di Milano, vers.27.03.13 01.12.25

$L^{XX}_{GA} = \int_o^b (1 - 2\,x/b + x^2/b^2)\ 1/EJ\ dx = [\ x - x^2/b + 1/3\ x^3/b^2\ ]_o^b\ 1/EJ$

$= (\ b - b + 1/3\ b\ )\ 1/EJ\ = 1/3\ b/EJ$

$L^{XX}_{AG} = \int_o^b (\ x^2/b^2\ )\ 1/EJ\ dx = [1/3\ x^3/b^2\ ]_o^b\ 1/EJ$

$= (1/3\ b\ )\ 1/EJ\ = 1/3\ b/EJ$

$L^{XX}_{HI} = \int_o^b (1 - 2\,x/b + x^2/b^2)\ 1/EJ\ dx = [\ x - x^2/b + 1/3\ x^3/b^2\ ]_o^b\ 1/EJ$

$= (\ b - b + 1/3\ b\ )\ 1/EJ\ = 1/3\ b/EJ$

$L^{XX}_{IH} = \int_o^b (\ x^2/b^2\ )\ 1/EJ\ dx = [1/3\ x^3/b^2\ ]_o^b\ 1/EJ$

$= (1/3\ b\ )\ 1/EJ\ = 1/3\ b/EJ$

$L^{XX}_{HG} = \int_o^b (1\ )\ 1/EJ\ dx = [\ x\ ]_o^b\ 1/EJ$

$= (\ b\ )\ 1/EJ\ =\ b/EJ$

$L^{XX}_{GH} = \int_o^b (1\ )\ 1/EJ\ dx = [\ x\ ]_o^b\ 1/EJ$

$= (\ b\ )\ 1/EJ\ =\ b/EJ$

$L^{Xo}_{GA} = \int_o^b (\ x/b - x^2/b^2\ )\ Fb\ 1/EJ\ dx = [1/2\ x^2/b - 1/3\ x^3/b^2\ ]_o^b\ Fb\ 1/EJ$

$= (1/2\ b - 1/3\ b\ )\ Fb\ 1/EJ\ = 1/6\ \ Fb^2/EJ$

$L^{Xo}_{AG} = \int_o^b (\ x/b - x^2/b^2\ )\ Fb\ 1/EJ\ dx = [1/2\ x^2/b - 1/3\ x^3/b^2\ ]_o^b\ Fb\ 1/EJ$

$= (1/2\ b - 1/3\ b\ )\ Fb\ 1/EJ\ = 1/6\ \ Fb^2/EJ$

$L^{Xo}_{HI} = \int_o^b (1/2 - 1/2\ x/b - 1/2\ x^2/b^2 + 1/2\ x^3/b^3\ )\ Fb\ 1/EJ\ dx$

$= [1/2\ x - 1/4\ x^2/b - 1/6\ x^3/b^2 + 1/8\ x^4/b^3\ ]_o^b\ Fb\ 1/EJ$

$= (1/2\ b - 1/4\ b - 1/6\ b + 1/8\ b\ )\ Fb\ 1/EJ\ = 5/24\ \ Fb^2/EJ$

$L^{Xo}_{IH} = \int_o^b (\ x^2/b^2 - 1/2\ x^3/b^3\ )\ Fb\ 1/EJ\ dx = [1/3\ x^3/b^2 - 1/8\ x^4/b^3\ ]_o^b\ Fb\ 1/EJ$

$= (1/3\ b - 1/8\ b\ )\ Fb\ 1/EJ\ = 5/24\ \ Fb^2/EJ$

$L^{Xo}_{HG} = \int_o^b (1/4 - 1/4\ x/b\ )\ Fb\ 1/EJ\ dx - 1\ \ (-1)\ \ (-1)\ \ Fb^2/EJ$

$= [1/4\ x - 1/8\ x^2/b\ ]_o^b\ Fb\ 1/EJ\ - 1\ \ (-1)\ \ (-1)\ \ Fb^2/EJ$

$= (1/4\ b - 1/8\ b\ )\ Fb\ 1/EJ\ - 1\ \ (-1)\ \ (-1)\ \ Fb^2/EJ = -7/8\ \ Fb^2/EJ$

$L^{Xo}_{GH} = \int_o^b (1/4\ x/b\ )\ Fb\ 1/EJ\ dx - 1\ \ (-1)\ \ (-1)\ \ Fb^2/EJ = [1/8\ x^2/b\ ]_o^b\ Fb\ 1/EJ\ - 1\ \ (-1)\ \ (-1)\ \ Fb^2/EJ$

$= (1/8\ b\ )\ Fb\ 1/EJ\ - 1\ \ (-1)\ \ (-1)\ \ Fb^2/EJ = -7/8\ \ Fb^2/EJ$

PROCEDIMENTO E RISULTATI 238160 ESΣ05.xxxx.075

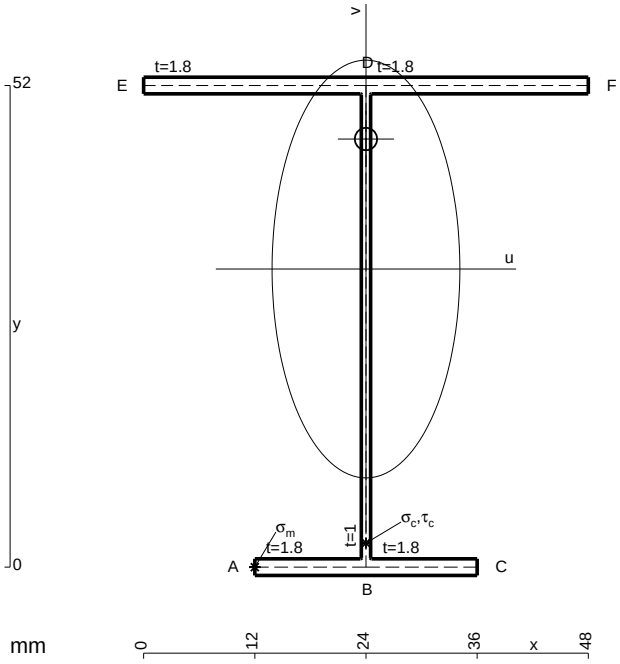

A = 181.6 mm^2
J_u = 92380. mm^4
J_v = 18662. mm^4
J_t = 157.3 mm^4
y_o = 14.04 mm
y_g = 32.19 mm
N = -215. N
T_y = 860. N
M_x = -567600. Nmm
x_m = 12. mm
u_m = -12. mm
v_m = -32.19 mm
$\sigma_m = N/A - Mv/J_u$ = -198.9 N/mm^2
x_c = 24. mm
v_c = -32.19 mm
$\sigma_c = N/A - Mv/J_u$ = -198.9 N/mm^2
$\tau_c = TS^*/tJ_u$ = 12.94 N/mm^2
$\tau_g = TS^*/tJ_u$ = 12.94 N/mm^2
t_c = 860. mm
$\sigma_o = \sqrt{\sigma^2 + 3\tau^2}$ = 200.2 N/mm^2

@ Adolfo Zavelani Rossi, Politecnico di Milano, vers.27.03.13 01.12.25

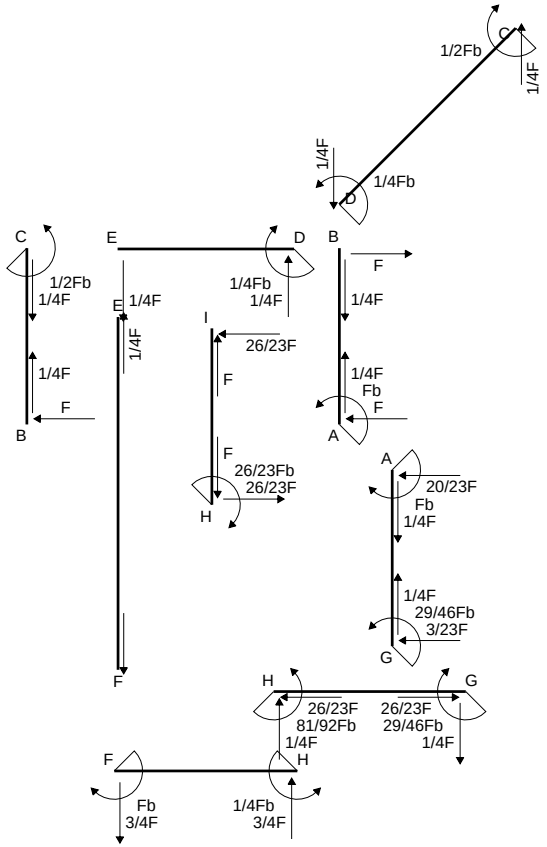
1/2Fb
1/4F
1/4F
1/4Fb
C
D
E
B
1/2Fb
1/4F
1/4F
F
1/4Fb
1/4F
1/4F
1/4F
I
26/23F
F
F
26/23Fb
26/23F
H
1/4F
Fb
F
A
A
20/23F
Fb
1/4F
1/4F
29/46Fb
3/23F
G
F
H
G
26/23F
81/92Fb
1/4F
26/23F
29/46Fb
1/4F
F
H
Fb
3/4F
1/4Fb
3/4F

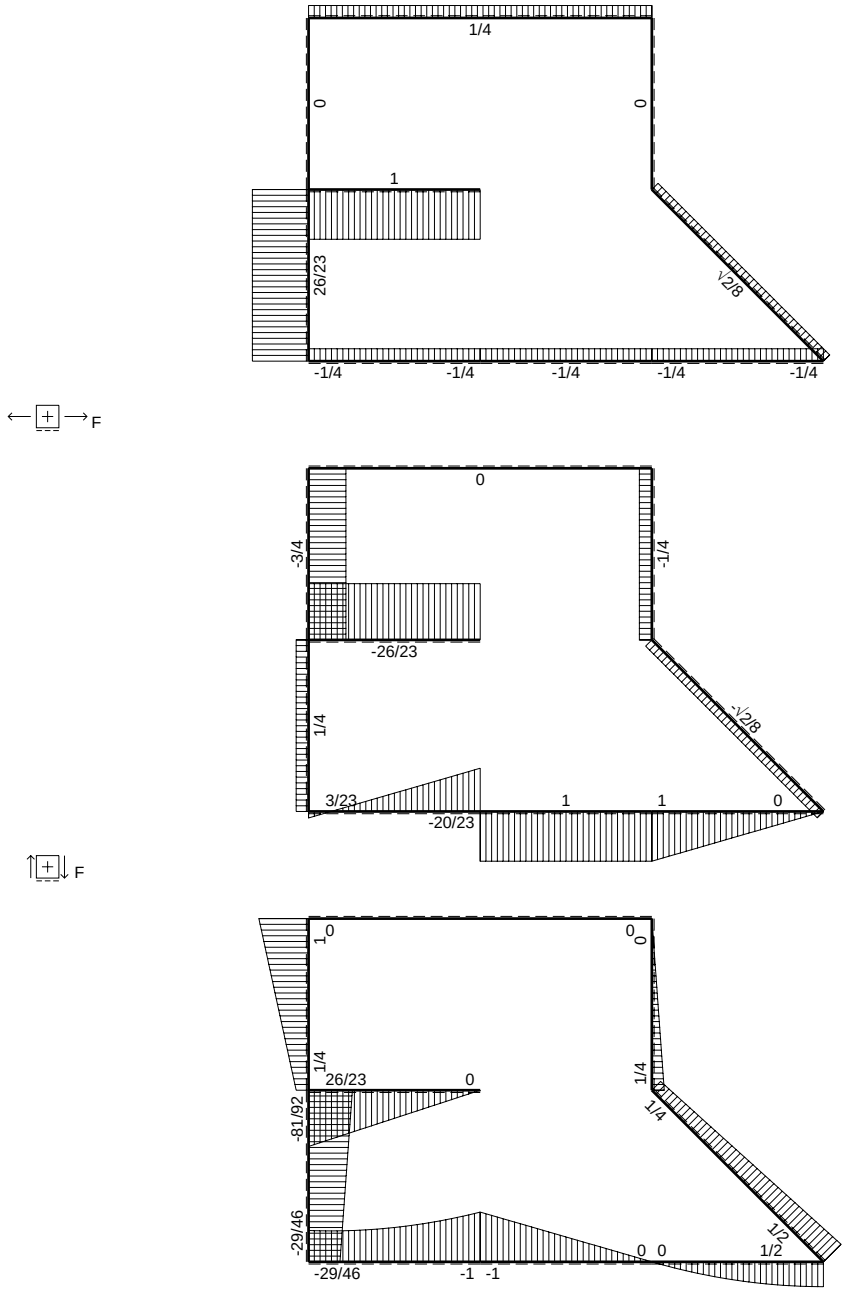
1/4
0
0
1
26/23
√2/8
-1/4
-1/4
-1/4
-1/4
-1/4
F
0
-3/4
-1/4
-26/23
1/4
-√2/8
3/23
1
1
0
-20/23
F
1
0
0
0
1/4
26/23
0
1/4
1/4
-81/92
-29/46
1/2
0
0
1/2
-29/46
-1
-1
Fb

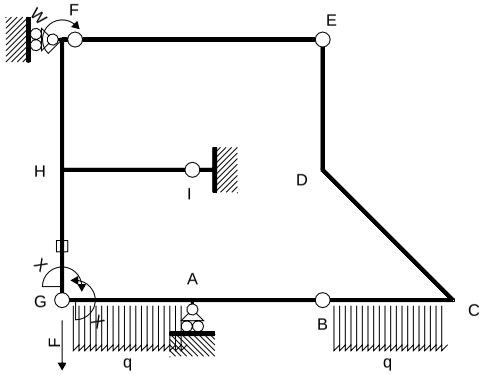

Schema di calcolo iperstatico

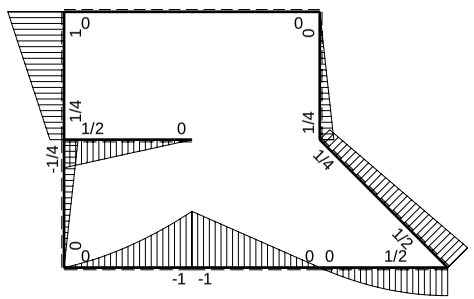

M_0 flessione da carichi assegnati

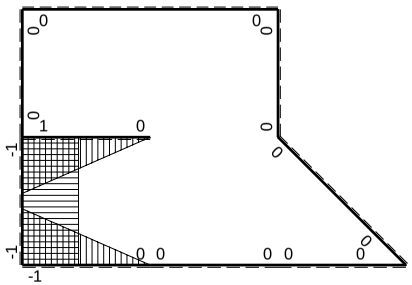

M_x flessione da iperstatica X=1

Quadro contributi PLV per iperstatica $X=W_{GA}$

→	$M_x(x)$	$M_0(x)$	M_xM_0	M_xM_x	$\int M_xM_0/EJdx$	$\int XM_xM_x/EJdx$
AB b	0	-Fb+Fx	0	0	0	0
BA b	0	Fx	0	0		
BC b	0	$Fx-1/2qx^2$	0	0	0	0
CB b	0	$-1/2Fb+1/2qx^2$	0	0		
CD $\sqrt{2}$b	0	$1/2Fb-\sqrt{2}/8Fx$	0	0	0	0
DE b	0	1/4Fb-1/4Fx	0	0	0	0
ED b	0	-1/4Fx	0	0		
EF 2b	0	0	0	0	0	0
FE 2b	0	0	0	0		
GA b	-1+x/b	$-1/2Fx-1/2qx^2$	$1/2Fx-1/2qx^3/b$	$1-2x/b+x^2/b^2$	$1/8Fb^2/EJ$	1/3Xb/EJ
AG b	x/b	$Fb-3/2Fx+1/2qx^2$	$Fx-3/2Fx^2/b+1/2qx^3/b$	x^2/b^2		
FH b	0	Fb-3/4Fx	0	0	0	0
HF b	0	-1/4Fb-3/4Fx	0	0		
HI b	1-x/b	1/2Fb-1/2Fx	$1/2Fb-Fx+1/2Fx^2/b$	$1-2x/b+x^2/b^2$	$1/6Fb^2/EJ$	1/3Xb/EJ
IH b	-x/b	-1/2Fx	$1/2Fx^2/b$	x^2/b^2		
HG b	-1	-1/4Fb+1/4Fx	1/4Fb-1/4Fx	1	$1/8Fb^2/EJ$	Xb/EJ
GH b	1	1/4Fx	1/4Fx	1		
HG	elongazione asta $N_{1HG}\varepsilon_{HG}L_{HG}$				$-Fb^2/EJ$	
A	molla nodo $-V_{1A}(V_{0A}+XV_{1A})/k_A$				$-5/8Fb^2/EJ$	1/4Xb/EJ
	totali				$-29/24Fb^2/EJ$	23/12Xb/EJ
	iperstatica $X=W_{GA}$				29/46Fb	

Sviluppi di calcolo iperstatica

$L^{XX}_{GA} = \int_o^b (1 - 2\,x/b + x^2/b^2)\ 1/EJ\ dx = [\,x - x^2/b + 1/3\,x^3/b^2\,]_o^b\ 1/EJ$

$= (\,b - b + 1/3\,b\,)\ 1/EJ = 1/3\ b/EJ$

$L^{XX}_{AG} = \int_o^b (\,x^2/b^2\,)\ 1/EJ\ dx = [1/3\,x^3/b^2\,]_o^b\ 1/EJ$

$= (1/3\,b\,)\ 1/EJ = 1/3\ b/EJ$

$L^{XX}_{HI} = \int_o^b (1 - 2\,x/b + x^2/b^2)\ 1/EJ\ dx = [\,x - x^2/b + 1/3\,x^3/b^2\,]_o^b\ 1/EJ$

$= (\,b - b + 1/3\,b\,)\ 1/EJ = 1/3\ b/EJ$

$L^{XX}_{IH} = \int_o^b (\,x^2/b^2\,)\ 1/EJ\ dx = [1/3\,x^3/b^2\,]_o^b\ 1/EJ$

$= (1/3\,b\,)\ 1/EJ = 1/3\ b/EJ$

$L^{XX}_{HG} = \int_o^b (1)\ 1/EJ\ dx = [\,x\,]_o^b\ 1/EJ$

$= (\,b\,)\ 1/EJ = b/EJ$

$L^{XX}_{GH} = \int_o^b (1)\ 1/EJ\ dx = [\,x\,]_o^b\ 1/EJ$

$= (\,b\,)\ 1/EJ = b/EJ$

$L^{Xo}_{GA} = \int_o^b (1/2\,x/b - 1/2\,x^3/b^3)\ Fb\ 1/EJ\ dx = [1/4\,x^2/b - 1/8\,x^4/b^3\,]_o^b\ Fb\ 1/EJ$

$= (1/4\,b - 1/8\,b\,)\ Fb\ 1/EJ = 1/8\ Fb^2/EJ$

$L^{Xo}_{AG} = \int_o^b (\,x/b - 3/2\,x^2/b^2 + 1/2\,x^3/b^3\,)\ Fb\ 1/EJ\ dx = [1/2\,x^2/b - 1/2\,x^3/b^2 + 1/8\,x^4/b^3\,]_o^b\ Fb\ 1/EJ$

$= (1/2\,b - 1/2\,b + 1/8\,b\,)\ Fb\ 1/EJ = 1/8\ Fb^2/EJ$

$L^{Xo}_{HI} = \int_o^b (1/2 - x/b + 1/2\,x^2/b^2\,)\ Fb\ 1/EJ\ dx = [1/2\,x - 1/2\,x^2/b + 1/6\,x^3/b^2\,]_o^b\ Fb\ 1/EJ$

$= (1/2\,b - 1/2\,b + 1/6\,b\,)\ Fb\ 1/EJ = 1/6\ Fb^2/EJ$

$L^{Xo}_{IH} = \int_o^b (1/2\,x^2/b^2\,)\ Fb\ 1/EJ\ dx = [1/6\,x^3/b^2\,]_o^b\ Fb\ 1/EJ$

$= (1/6\,b\,)\ Fb\ 1/EJ = 1/6\ Fb^2/EJ$

$L^{Xo}_{HG} = \int_o^b (1/4 - 1/4\,x/b\,)\ Fb\ 1/EJ\ dx - 1\ \ (-1)\ \ (-1)\ \ Fb^2/EJ$

$= [1/4\,x - 1/8\,x^2/b\,]_o^b\ Fb\ 1/EJ\ - 1\ \ (-1)\ \ (-1)\ \ Fb^2/EJ$

$= (1/4\,b - 1/8\,b\,)\ Fb\ 1/EJ\ - 1\ \ (-1)\ \ (-1)\ \ Fb^2/EJ = -7/8\ \ Fb^2/EJ$

$L^{Xo}_{GH} = \int_o^b (1/4\,x/b\,)\ Fb\ 1/EJ\ dx - 1\ \ (-1)\ \ (-1)\ \ Fb^2/EJ = [1/8\,x^2/b\,]_o^b\ Fb\ 1/EJ\ - 1\ \ (-1)\ \ (-1)\ \ Fb^2/EJ$

$= (1/8\,b\,)\ Fb\ 1/EJ\ - 1\ \ (-1)\ \ (-1)\ \ Fb^2/EJ = -7/8\ \ Fb^2/EJ$

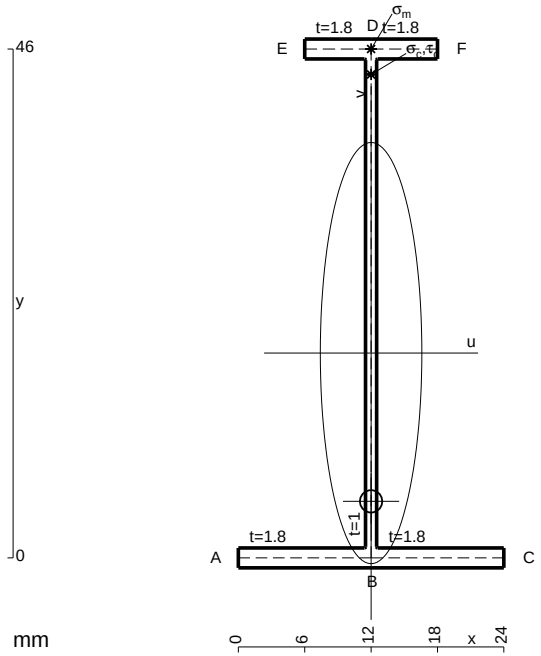

A = 110.8 mm^2
J_u = 40163. mm^4
J_v = 2333. mm^4
J_t = 85.32 mm^4
y_o = -13.41 mm
y_g = 18.52 mm
N = -122.5 N
T_y = 490. N
M_x = -303800. Nmm
x_m = 12. mm
y_m = 46. mm
v_m = 27.48 mm
$\sigma_m = N/A - Mv/J_u$ = 206.8 N/mm^2
y_c = 2. mm
u_c = -12. mm
v_c = -16.52 mm
$\sigma_c = N/A - Mv/J_u$ = 206.8 N/mm^2
$\tau_c = TS^*/tJ_u$ = 7.243 N/mm^2
$\tau_g = TS^*/tJ_u$ = 7.243 N/mm^2
t_c = 490. mm
$\sigma_o = \sqrt{\sigma^2 + 3\tau^2}$ = 207.2 N/mm^2

ESΣ05.xxxx.076

@ Adolfo Zavelani Rossi, Politecnico di Milano, vers.27.03.13 01.12.25

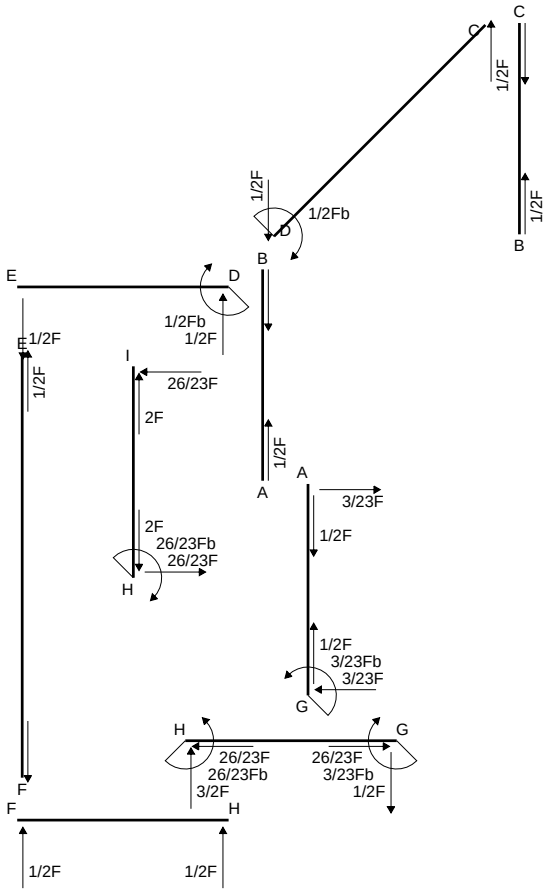
C
C
1/2F
1/2F
1/2Fb
D
B
B
E
D
1/2Fb
1/2F
E
1/2F
1/2F
I
26/23F
2F
1/2F
A
A
3/23F
1/2F
2F
26/23Fb
26/23F
H
1/2F
3/23Fb
3/23F
G
H
G
26/23F
26/23Fb
3/2F
26/23F
3/23Fb
1/2F
F
F
H
1/2F
1/2F

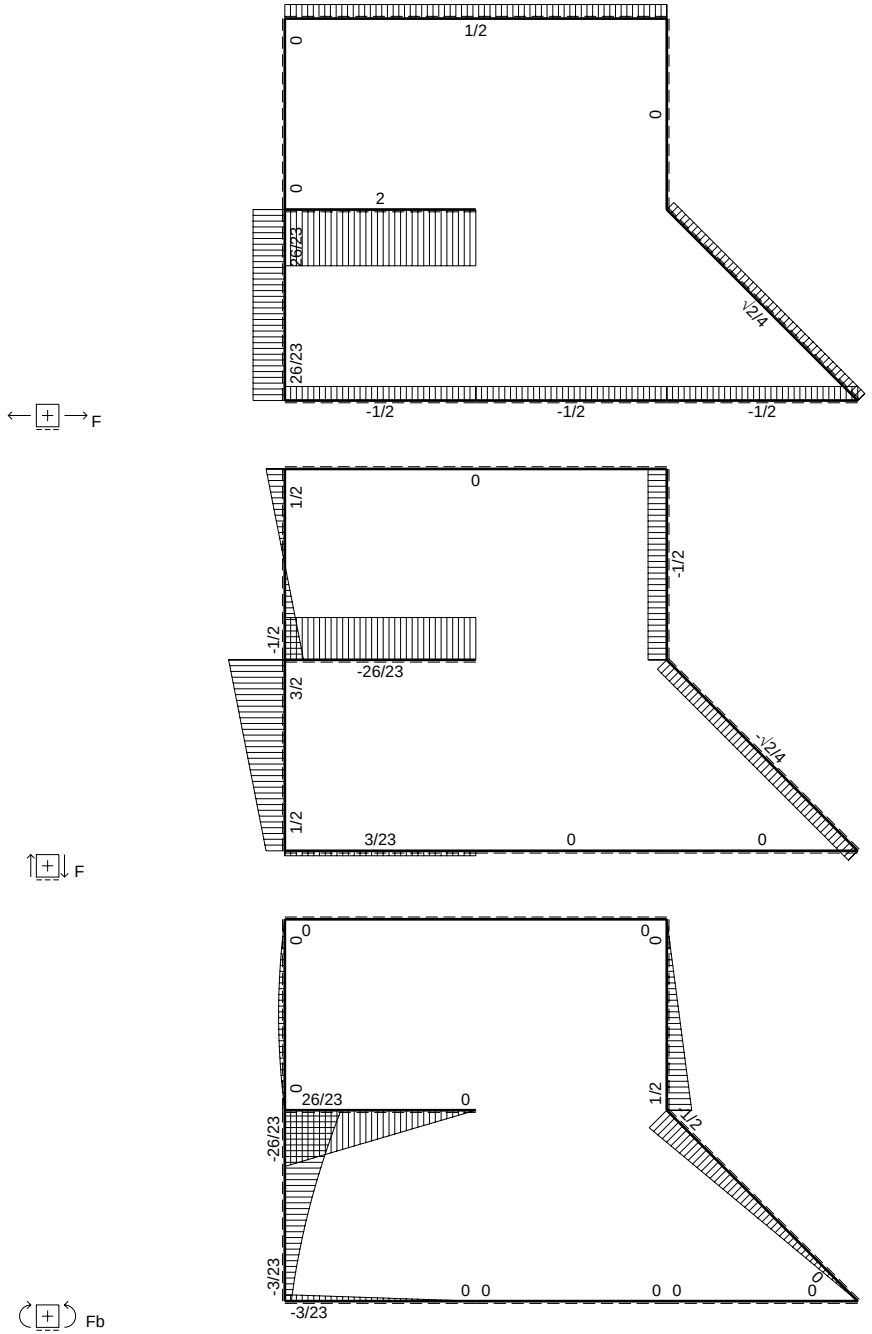
F
1/2
0
0
0
2
26/23
√2/4
26/23
-1/2
-1/2
-1/2
F
0
1/2
-1/2
-1/2
-26/23
3/2
√2/4
1/2
3/23
0
0
Fb
0
0
0
0
26/23
0
1/2
1/2
-26/23
-3/23
0 0
0 0
0
-3/23

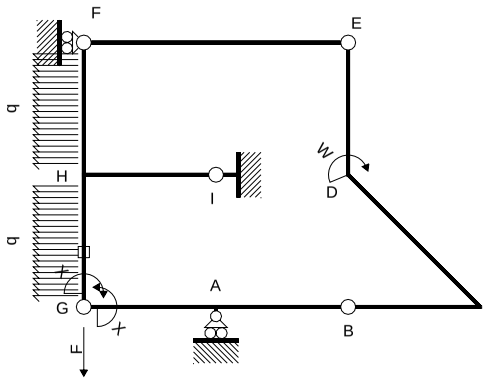

Schema di calcolo iperstatico

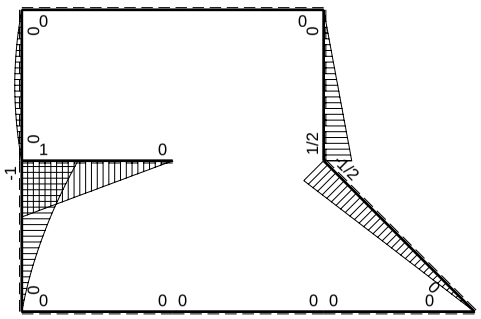

M_0 flessione da carichi assegnati

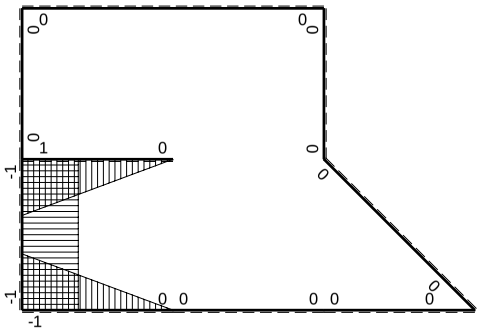

M_x flessione da iperstatica X=1

Quadro contributi PLV per iperstatica $X=W_{GA}$

→	$M_x(x)$	$M_o(x)$	M_xM_o	M_xM_x	$\int M_xM_o/EJdx$	$\int XM_xM_x/EJdx$
AB b	0	0	0	0	0	0
BA b	0	0	0	0		
BC b	0	0	0	0	0	0
CB b	0	0	0	0		
CD √2b	0	$-\sqrt{2}/4Fx$	0	0	0	0
DE b	0	1/2Fb-1/2Fx	0	0	0	0
ED b	0	-1/2Fx	0	0		
EF 2b	0	0	0	0	0	0
FE 2b	0	0	0	0		
GA b	-1+x/b	0	0	$1-2x/b+x^2/b^2$	0	1/3Xb/EJ
AG b	x/b	0	0	x^2/b^2		
FH b	0	$1/2Fx-1/2qx^2$	0	0	0	0
HF b	0	$-1/2Fx+1/2qx^2$	0	0		
HI b	1-x/b	Fb-Fx	$Fb-2Fx+Fx^2/b$	$1-2x/b+x^2/b^2$	$1/3Fb^2/EJ$	1/3Xb/EJ
IH b	-x/b	-Fx	Fx^2/b	x^2/b^2		
HG b	-1	$-Fb+3/2Fx-1/2qx^2$	$Fb-3/2Fx+1/2Fx^2/b$	1	$5/12Fb^2/EJ$	Xb/EJ
GH b	1	$1/2Fx+1/2qx^2$	$1/2Fx+1/2Fx^2/b$	1		
HG	elongazione asta $N_{1HG}\varepsilon_{HG}L_{HG}$				$-Fb^2/EJ$	
A	molla nodo $-V_{1A}(V_{0A}+XV_{1A})/k_A$					1/4Xb/EJ
	totali				$-1/4Fb^2/EJ$	23/12Xb/EJ
	iperstatica $X=W_{GA}$				3/23Fb	

Sviluppi di calcolo iperstatica

$L^{XX}_{GA} = \int_o^b (1 - 2\,x/b + x^2/b^2)\ 1/EJ\ dx = [\ x - x^2/b + 1/3\ x^3/b^2\ ]_o^b\ 1/EJ$

$= (\ b - b + 1/3\ b\ )\ 1/EJ\ = 1/3\ b/EJ$

$L^{XX}_{AG} = \int_o^b (\ x^2/b^2\ )\ 1/EJ\ dx = [1/3\ x^3/b^2\ ]_o^b\ 1/EJ$

$= (1/3\ b\ )\ 1/EJ\ = 1/3\ b/EJ$

$L^{XX}_{HI} = \int_o^b (1 - 2\,x/b + x^2/b^2)\ 1/EJ\ dx = [\ x - x^2/b + 1/3\ x^3/b^2\ ]_o^b\ 1/EJ$

$= (\ b - b + 1/3\ b\ )\ 1/EJ\ = 1/3\ b/EJ$

$L^{XX}_{IH} = \int_o^b (\ x^2/b^2\ )\ 1/EJ\ dx = [1/3\ x^3/b^2\ ]_o^b\ 1/EJ$

$= (1/3\ b\ )\ 1/EJ\ = 1/3\ b/EJ$

$L^{XX}_{HG} = \int_o^b (1)\ 1/EJ\ dx = [\ x\ ]_o^b\ 1/EJ$

$= (\ b\ )\ 1/EJ\ =\ b/EJ$

$L^{XX}_{GH} = \int_o^b (1)\ 1/EJ\ dx = [\ x\ ]_o^b\ 1/EJ$

$= (\ b\ )\ 1/EJ\ =\ b/EJ$

$L^{Xo}_{HI} = \int_o^b (1 - 2\,x/b + x^2/b^2)\ Fb\ 1/EJ\ dx = [\ x - x^2/b + 1/3\ x^3/b^2\ ]_o^b\ Fb\ 1/EJ$

$= (\ b - b + 1/3\ b\ )\ Fb\ 1/EJ\ = 1/3\ Fb^2/EJ$

$L^{Xo}_{IH} = \int_o^b (\ x^2/b^2\ )\ Fb\ 1/EJ\ dx = [1/3\ x^3/b^2\ ]_o^b\ Fb\ 1/EJ$

$= (1/3\ b\ )\ Fb\ 1/EJ\ = 1/3\ Fb^2/EJ$

$L^{Xo}_{HG} = \int_o^b (1 - 3/2\,x/b + 1/2\ x^2/b^2\ )\ Fb\ 1/EJ\ dx - 1\ \ (-1)\ \ (-1)\ \ Fb^2/EJ$

$= [\ x - 3/4\ x^2/b + 1/6\ x^3/b^2\ ]_o^b\ Fb\ 1/EJ\ -\ 1\ \ (-1)\ \ (-1)\ \ Fb^2/EJ$

$= (\ b - 3/4\ b + 1/6\ b\ )\ Fb\ 1/EJ\ -\ 1\ \ (-1)\ \ (-1)\ \ Fb^2/EJ = -7/12\ \ Fb^2/EJ$

$L^{Xo}_{GH} = \int_o^b (1/2\,x/b + 1/2\ x^2/b^2\ )\ Fb\ 1/EJ\ dx - 1\ \ (-1)\ \ (-1)\ \ Fb^2/EJ$

$= [1/4\ x^2/b + 1/6\ x^3/b^2\ ]_o^b\ Fb\ 1/EJ\ -\ 1\ \ (-1)\ \ (-1)\ \ Fb^2/EJ$

$= (1/4\ b + 1/6\ b\ )\ Fb\ 1/EJ\ -\ 1\ \ (-1)\ \ (-1)\ \ Fb^2/EJ = -7/12\ \ Fb^2/EJ$

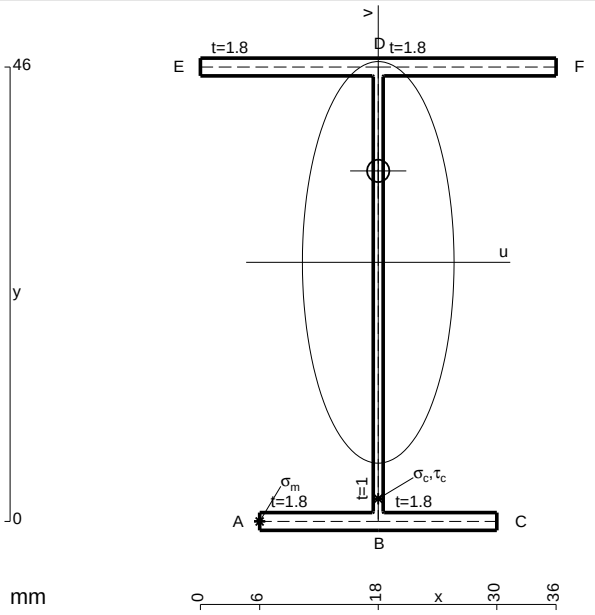

A = 154. mm^2
J_u = 63641. mm^4
J_v = 9072. mm^4
J_t = 132. mm^4
y_o = 9.26 mm
y_g = 26.23 mm
T_y = -805. N
M_x = 531300. Nmm
x_m = 6. mm
u_m = -12. mm
v_m = -26.23 mm
$\sigma_m = -Mv/J_u$ = 218.9 N/mm^2
x_c = 18. mm
v_c = -26.23 mm
$\sigma_c = -Mv/J_u$ = 218.9 N/mm^2
$\tau_c = TS^*/tJ_u$ = 14.33 N/mm^2
$\tau_g = TS^*/tJ_u$ = 14.33 N/mm^2
t_c = 1610. mm
$\sigma_o = \sqrt{\sigma^2 + 3\tau^2}$ = 220.3 N/mm^2

ESΣ05.xxxx.077

@ Adolfo Zavelani Rossi, Politecnico di Milano, vers.27.03.13 01.12.25

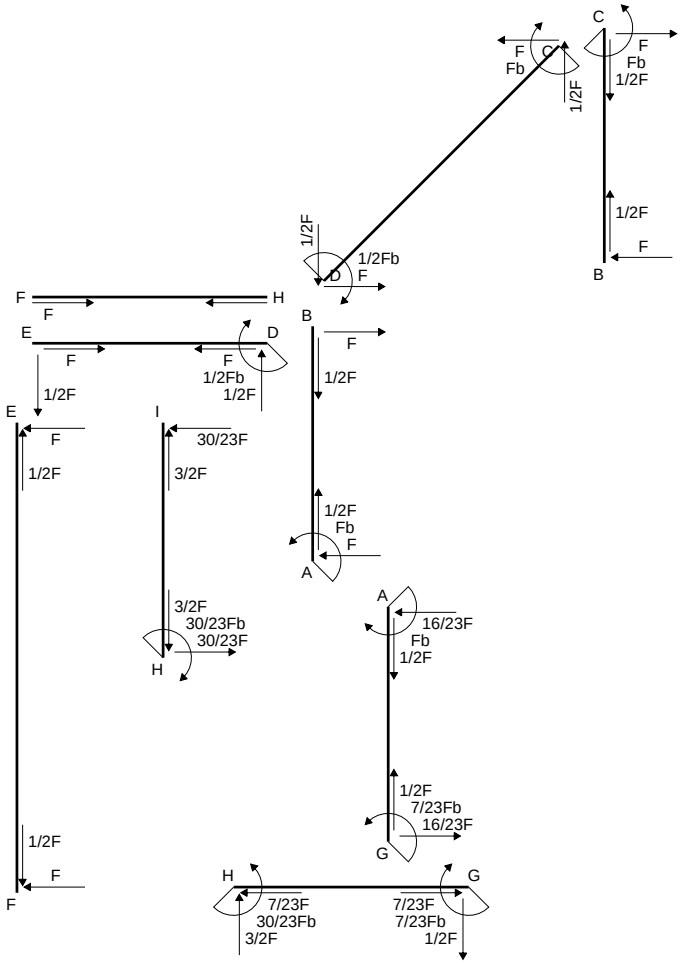
C
F
Fb
1/2F
F
Fb
1/2F
1/2F
F
B
1/2F
1/2Fb
F
D
F
H
F
E
D
F
F
1/2Fb
1/2F
1/2F
B
F
1/2F
E
F
1/2F
I
30/23F
3/2F
1/2F
Fb
F
A
3/2F
30/23Fb
30/23F
H
A
16/23F
Fb
1/2F
1/2F
7/23Fb
16/23F
G
1/2F
F
F
H
7/23F
30/23Fb
3/2F
G
7/23F
7/23Fb
1/2F

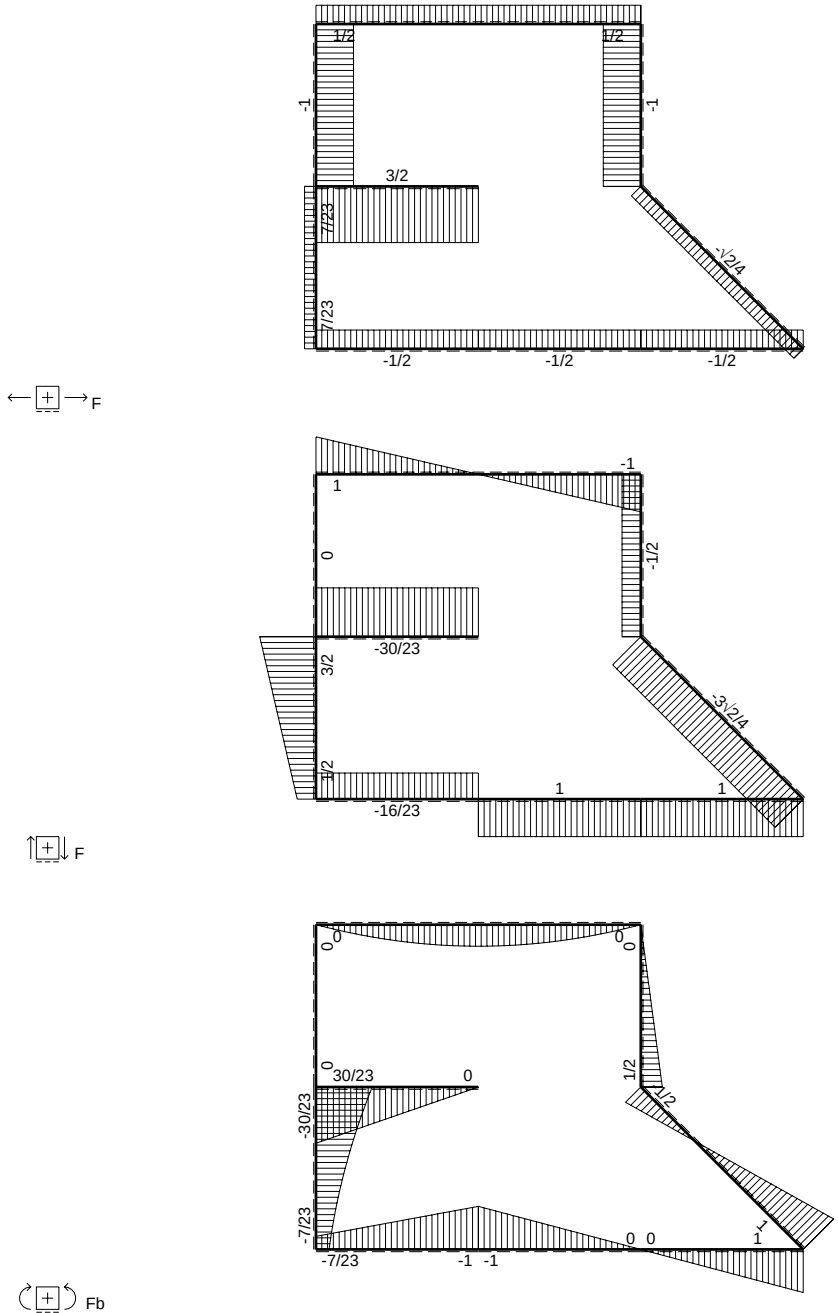
F
1/2
1/2
-1
-1
3/2
7/23
-1/2
7/23
-1/2
-1/2
-1/2
F
-1
1
0
-1/2
-30/23
3/2
-3/2
1/2
-16/23
1
1
F
0
0
0
0
30/23
0
1/2
-30/23
1/2
-7/23
-7/23
-1
-1
0
0
1
-1
Fb

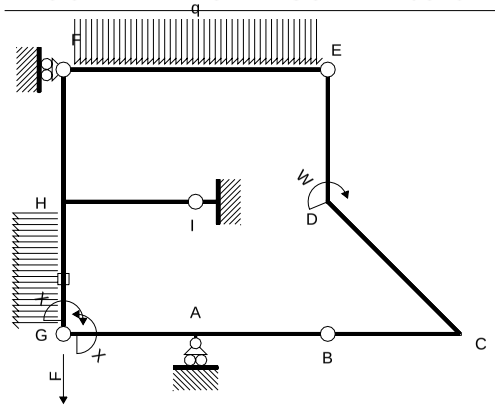

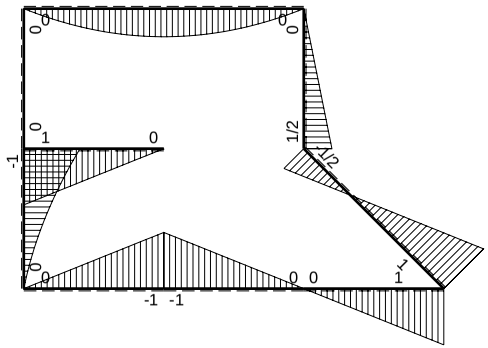

M_0 flessione da carichi assegnati

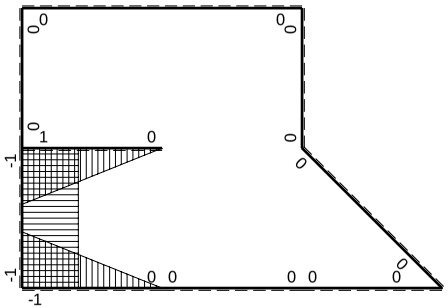

M_x flessione da iperstatica X=1

Quadro contributi PLV per iperstatica $X=W_{GA}$

→	$M_x(x)$	$M_o(x)$	M_xM_o	M_xM_x	$\int M_xM_o/EJdx$	$\int XM_xM_x/EJdx$
AB b	0	-Fb+Fx	0	0	0	0
BA b	0	Fx	0	0		
BC b	0	Fx	0	0	0	0
CB b	0	-Fb+Fx	0	0		
CD √2b	0	Fb-3√2/4Fx	0	0	0	0
DE b	0	1/2Fb-1/2Fx	0	0	0	0
ED b	0	-1/2Fx	0	0		
EF 2b	0	$-Fx+1/2qx^2$	0	0	0	0
FE 2b	0	$Fx-1/2qx^2$	0	0		
GA b	-1+x/b	-Fx	$Fx-Fx^2/b$	$1-2x/b+x^2/b^2$	$1/6Fb^2/EJ$	1/3Xb/EJ
AG b	x/b	Fb-Fx	$Fx-Fx^2/b$	x^2/b^2		
FH b	0	0	0	0	0	0
HF b	0	0	0	0		
HI b	1-x/b	Fb-Fx	$Fb-2Fx+Fx^2/b$	$1-2x/b+x^2/b^2$	$1/3Fb^2/EJ$	1/3Xb/EJ
IH b	-x/b	-Fx	Fx^2/b	x^2/b^2		
HG b	-1	$-Fb+3/2Fx-1/2qx^2$	$Fb-3/2Fx+1/2Fx^2/b$	1	$5/12Fb^2/EJ$	Xb/EJ
GH b	1	$1/2Fx+1/2qx^2$	$1/2Fx+1/2Fx^2/b$	1		
HG	elongazione asta $N_{1HG}\varepsilon_{HG}L_{HG}$				$-Fb^2/EJ$	
A	molla nodo $-V_{1A}(V_{0A}+XV_{1A})/k_A$				$-1/2Fb^2/EJ$	1/4Xb/EJ
	totali				$-7/12Fb^2/EJ$	23/12Xb/EJ
	iperstatica $X=W_{GA}$				7/23Fb	

Sviluppi di calcolo iperstatica

$L^{XX}_{GA} = \int_o^b (1 - 2\,x/b + x^2/b^2)\ 1/EJ\ dx = [\ x - x^2/b + 1/3\ x^3/b^2\ ]_o^b\ 1/EJ$

$= (\ b - b + 1/3\ b\ )\ 1/EJ\ = 1/3\ b/EJ$

$L^{XX}_{AG} = \int_o^b (\ x^2/b^2\ )\ 1/EJ\ dx = [1/3\ x^3/b^2\ ]_o^b\ 1/EJ$

$= (1/3\ b\ )\ 1/EJ\ = 1/3\ b/EJ$

$L^{XX}_{HI} = \int_o^b (1 - 2\,x/b + x^2/b^2)\ 1/EJ\ dx = [\ x - x^2/b + 1/3\ x^3/b^2\ ]_o^b\ 1/EJ$

$= (\ b - b + 1/3\ b\ )\ 1/EJ\ = 1/3\ b/EJ$

$L^{XX}_{IH} = \int_o^b (\ x^2/b^2\ )\ 1/EJ\ dx = [1/3\ x^3/b^2\ ]_o^b\ 1/EJ$

$= (1/3\ b\ )\ 1/EJ\ = 1/3\ b/EJ$

$L^{XX}_{HG} = \int_o^b (1)\ 1/EJ\ dx = [\ x\ ]_o^b\ 1/EJ$

$= (\ b\ )\ 1/EJ\ =\ b/EJ$

$L^{XX}_{GH} = \int_o^b (1)\ 1/EJ\ dx = [\ x\ ]_o^b\ 1/EJ$

$= (\ b\ )\ 1/EJ\ =\ b/EJ$

$L^{Xo}_{GA} = \int_o^b (\ x/b - x^2/b^2\ )\ Fb\ 1/EJ\ dx = [1/2\ x^2/b - 1/3\ x^3/b^2\ ]_o^b\ Fb\ 1/EJ$

$= (1/2\ b - 1/3\ b\ )\ Fb\ 1/EJ\ = 1/6\ \ Fb^2/EJ$

$L^{Xo}_{AG} = \int_o^b (\ x/b - x^2/b^2\ )\ Fb\ 1/EJ\ dx = [1/2\ x^2/b - 1/3\ x^3/b^2\ ]_o^b\ Fb\ 1/EJ$

$= (1/2\ b - 1/3\ b\ )\ Fb\ 1/EJ\ = 1/6\ \ Fb^2/EJ$

$L^{Xo}_{HI} = \int_o^b (1 - 2\,x/b + x^2/b^2)\ Fb\ 1/EJ\ dx = [\ x - x^2/b + 1/3\ x^3/b^2\ ]_o^b\ Fb\ 1/EJ$

$= (\ b - b + 1/3\ b\ )\ Fb\ 1/EJ\ = 1/3\ \ Fb^2/EJ$

$L^{Xo}_{IH} = \int_o^b (\ x^2/b^2\ )\ Fb\ 1/EJ\ dx = [1/3\ x^3/b^2\ ]_o^b\ Fb\ 1/EJ$

$= (1/3\ b\ )\ Fb\ 1/EJ\ = 1/3\ \ Fb^2/EJ$

$L^{Xo}_{HG} = \int_o^b (1 - 3/2\ x/b + 1/2\ x^2/b^2)\ Fb\ 1/EJ\ dx - 1\ \ (-1)\ \ (-1)\ \ Fb^2/EJ$

$= [\ x - 3/4\ x^2/b + 1/6\ x^3/b^2\ ]_o^b\ Fb\ 1/EJ\ - 1\ \ (-1)\ \ (-1)\ \ Fb^2/EJ$

$= (\ b - 3/4\ b + 1/6\ b\ )\ Fb\ 1/EJ\ - 1\ \ (-1)\ \ (-1)\ \ Fb^2/EJ = -7/12\ \ Fb^2/EJ$

$L^{Xo}_{GH} = \int_o^b (1/2\ x/b + 1/2\ x^2/b^2)\ Fb\ 1/EJ\ dx - 1\ \ (-1)\ \ (-1)\ \ Fb^2/EJ$

$= [1/4\ x^2/b + 1/6\ x^3/b^2\ ]_o^b\ Fb\ 1/EJ\ - 1\ \ (-1)\ \ (-1)\ \ Fb^2/EJ$

$= (1/4\ b + 1/6\ b\ )\ Fb\ 1/EJ\ - 1\ \ (-1)\ \ (-1)\ \ Fb^2/EJ = -7/12\ \ Fb^2/EJ$

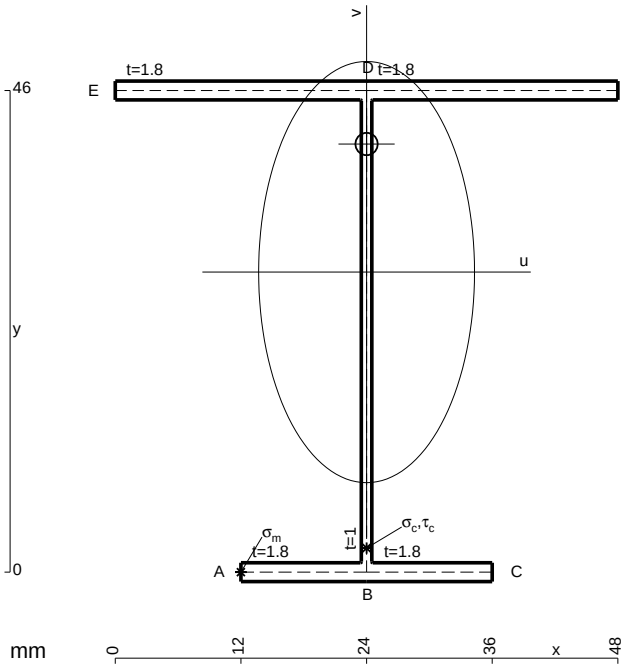

$A = 175.6\ mm^2$

$J_u = 71048.\ mm^4$

$J_v = 18662.\ mm^4$

$J_t = 155.3\ mm^4$

$y_o = 12.23\ mm$

$y_g = 28.66\ mm$

$N = -289.9\ N$

$T_y = -869.7\ N$

$M_x = 574000.\ Nmm$

$x_m = 12.\ mm$

$u_m = -12.\ mm$

$v_m = -28.66\ mm$

$\sigma_m = N/A - Mv/J_u = 229.9\ N/mm^2$

$x_c = 24.\ mm$

$v_c = -28.66\ mm$

$\sigma_c = N/A - Mv/J_u = 229.9\ N/mm^2$

$\tau_c = TS^*/tJ_u = 15.16\ N/mm^2$

$\tau_g = TS^*/tJ_u = 15.16\ N/mm^2$

$t_c = 820.\ mm$

$\sigma_o = \sqrt{\sigma^2 + 3\tau^2} = 231.4\ N/mm^2$

ESΣ05.xxxx.078

@ Adolfo Zavelani Rossi, Politecnico di Milano, vers.27.03.13 01.12.25

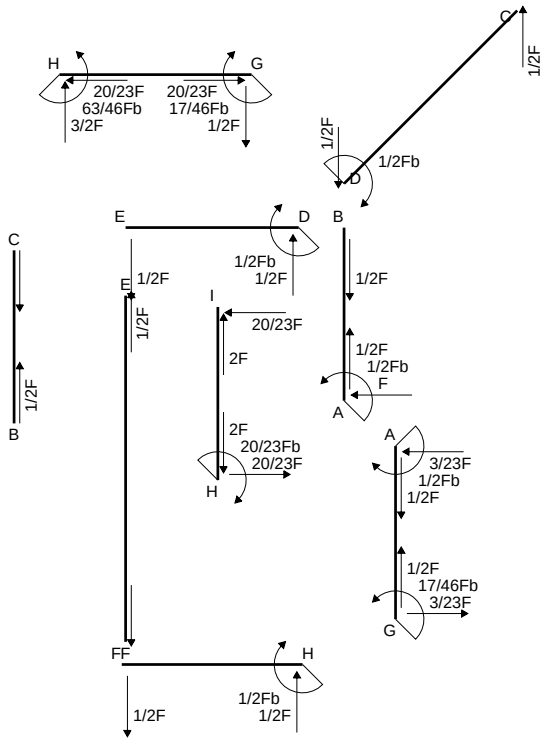
H
G
20/23F
63/46Fb
3/2F
20/23F
17/46Fb
1/2F
C
1/2F
1/2F
1/2Fb
D
E
D
B
1/2Fb
1/2F
1/2F
E
1/2F
I
20/23F
2F
1/2F
1/2Fb
F
A
2F
20/23Fb
20/23F
H
A
3/23F
1/2Fb
1/2F
C
1/2F
B
1/2F
17/46Fb
3/23F
G
FF
H
1/2Fb
1/2F
1/2F

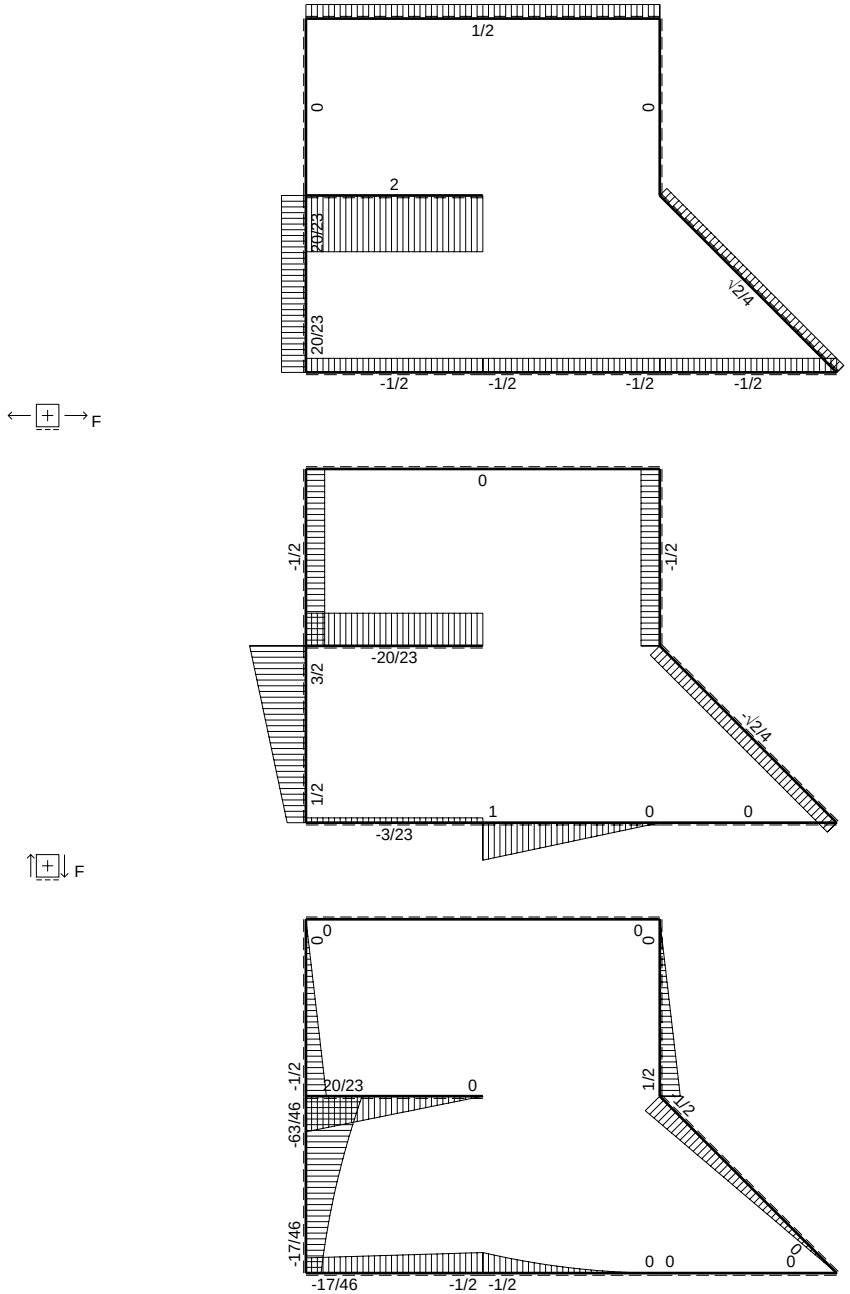
1/2
0
0
2
20/23
1/2
20/23
-1/2
-1/2
-1/2
-1/2
F
0
-1/2
-1/2
-20/23
3/2
1/2
1
0
0
-3/23
F
0
0
0
0
-1/2
20/23
0
1/2
1/2
-63/46
-17/46
0 0
0
-17/46
-1/2 -1/2
Fb

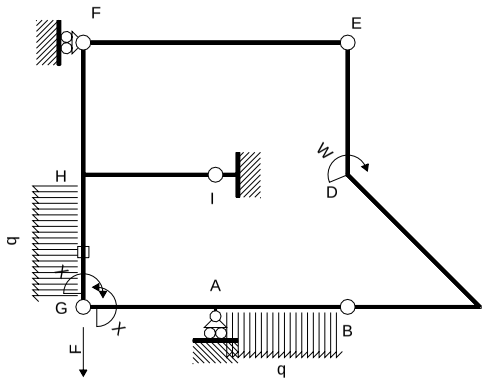

Schema di calcolo iperstatico

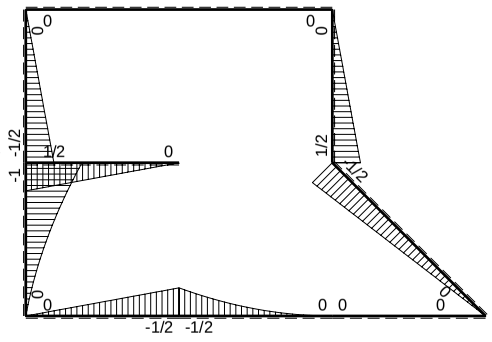

M_0 flessione da carichi assegnati

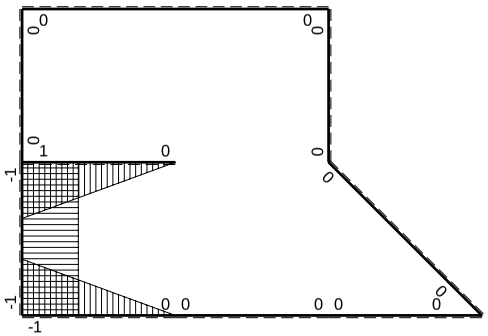

M_x flessione da iperstatica X=1

Quadro contributi PLV per iperstatica $X=W_{GA}$

→	$M_x(x)$	$M_o(x)$	M_xM_o	M_xM_x	$\int M_xM_o/EJdx$	$\int XM_xM_x/EJdx$
AB b	0	$-1/2Fb+Fx-1/2qx^2$	0	0	0	0
BA b	0	$1/2qx^2$	0	0		
BC b	0	0	0	0	0	0
CB b	0	0	0	0		
CD √2b	0	$-\sqrt{2}/4Fx$	0	0	0	0
DE b	0	$1/2Fb-1/2Fx$	0	0	0	0
ED b	0	$-1/2Fx$	0	0		
EF 2b	0	0	0	0	0	0
FE 2b	0	0	0	0		
GA b	$-1+x/b$	$-1/2Fx$	$1/2Fx-1/2Fx^2/b$	$1-2x/b+x^2/b^2$	$1/12Fb^2/EJ$	$1/3Xb/EJ$
AG b	x/b	$1/2Fb-1/2Fx$	$1/2Fx-1/2Fx^2/b$	x^2/b^2		
FH b	0	$-1/2Fx$	0	0	0	0
HF b	0	$1/2Fb-1/2Fx$	0	0		
HI b	$1-x/b$	$1/2Fb-1/2Fx$	$1/2Fb-Fx+1/2Fx^2/b$	$1-2x/b+x^2/b^2$	$1/6Fb^2/EJ$	$1/3Xb/EJ$
IH b	$-x/b$	$-1/2Fx$	$1/2Fx^2/b$	x^2/b^2		
HG b	-1	$-Fb+3/2Fx-1/2qx^2$	$Fb-3/2Fx+1/2Fx^2/b$	1	$5/12Fb^2/EJ$	Xb/EJ
GH b	1	$1/2Fx+1/2qx^2$	$1/2Fx+1/2Fx^2/b$	1		
HG	elongazione asta $N_{1HG}\varepsilon_{HG}L_{HG}$				$-Fb^2/EJ$	
A	molla nodo $-V_{1A}(V_{0A}+XV_{1A})/k_A$				$-3/8Fb^2/EJ$	$1/4Xb/EJ$
	totali				$-17/24Fb^2/EJ$	$23/12Xb/EJ$
	iperstatica $X=W_{GA}$				17/46Fb	

Sviluppi di calcolo iperstatica

$L^{XX}_{GA} = \int_o^b (1 - 2\,x/b + x^2/b^2)\ 1/EJ\ dx = [\ x - x^2/b + 1/3\ x^3/b^2\ ]_o^b\ 1/EJ$

$= (\ b - b + 1/3\ b\ )\ 1/EJ\ = 1/3\ b/EJ$

$L^{XX}_{AG} = \int_o^b (\ x^2/b^2\ )\ 1/EJ\ dx = [1/3\ x^3/b^2\ ]_o^b\ 1/EJ$

$= (1/3\ b\ )\ 1/EJ\ = 1/3\ b/EJ$

$L^{XX}_{HI} = \int_o^b (1 - 2\,x/b + x^2/b^2)\ 1/EJ\ dx = [\ x - x^2/b + 1/3\ x^3/b^2\ ]_o^b\ 1/EJ$

$= (\ b - b + 1/3\ b\ )\ 1/EJ\ = 1/3\ b/EJ$

$L^{XX}_{IH} = \int_o^b (\ x^2/b^2\ )\ 1/EJ\ dx = [1/3\ x^3/b^2\ ]_o^b\ 1/EJ$

$= (1/3\ b\ )\ 1/EJ\ = 1/3\ b/EJ$

$L^{XX}_{HG} = \int_o^b (1)\ 1/EJ\ dx = [\ x\ ]_o^b\ 1/EJ$

$= (\ b\ )\ 1/EJ\ =\ b/EJ$

$L^{XX}_{GH} = \int_o^b (1)\ 1/EJ\ dx = [\ x\ ]_o^b\ 1/EJ$

$= (\ b\ )\ 1/EJ\ =\ b/EJ$

$L^{Xo}_{GA} = \int_o^b (1/2\ x/b - 1/2\ x^2/b^2)\ Fb\ 1/EJ\ dx = [1/4\ x^2/b - 1/6\ x^3/b^2\ ]_o^b\ Fb\ 1/EJ$

$= (1/4\ b - 1/6\ b\ )\ Fb\ 1/EJ\ = 1/12\ \ Fb^2/EJ$

$L^{Xo}_{AG} = \int_o^b (1/2\ x/b - 1/2\ x^2/b^2)\ Fb\ 1/EJ\ dx = [1/4\ x^2/b - 1/6\ x^3/b^2\ ]_o^b\ Fb\ 1/EJ$

$= (1/4\ b - 1/6\ b\ )\ Fb\ 1/EJ\ = 1/12\ \ Fb^2/EJ$

$L^{Xo}_{HI} = \int_o^b (1/2 - x/b + 1/2\ x^2/b^2)\ Fb\ 1/EJ\ dx = [1/2\ x - 1/2\ x^2/b + 1/6\ x^3/b^2\ ]_o^b\ Fb\ 1/EJ$

$= (1/2\ b - 1/2\ b + 1/6\ b\ )\ Fb\ 1/EJ\ = 1/6\ \ Fb^2/EJ$

$L^{Xo}_{IH} = \int_o^b (1/2\ x^2/b^2)\ Fb\ 1/EJ\ dx = [1/6\ x^3/b^2\ ]_o^b\ Fb\ 1/EJ$

$= (1/6\ b\ )\ Fb\ 1/EJ\ = 1/6\ \ Fb^2/EJ$

$L^{Xo}_{HG} = \int_o^b (1 - 3/2\ x/b + 1/2\ x^2/b^2)\ Fb\ 1/EJ\ dx - 1\ \ (-1)\ \ (-1)\ \ Fb^2/EJ$

$= [\ x - 3/4\ x^2/b + 1/6\ x^3/b^2\ ]_o^b\ Fb\ 1/EJ\ - 1\ \ (-1)\ \ (-1)\ \ Fb^2/EJ$

$= (\ b - 3/4\ b + 1/6\ b\ )\ Fb\ 1/EJ\ - 1\ \ (-1)\ \ (-1)\ \ Fb^2/EJ = -7/12\ \ Fb^2/EJ$

$L^{Xo}_{GH} = \int_o^b (1/2\ x/b + 1/2\ x^2/b^2)\ Fb\ 1/EJ\ dx - 1\ \ (-1)\ \ (-1)\ \ Fb^2/EJ$

$= [1/4\ x^2/b + 1/6\ x^3/b^2\ ]_o^b\ Fb\ 1/EJ\ - 1\ \ (-1)\ \ (-1)\ \ Fb^2/EJ$

$= (1/4\ b + 1/6\ b\ )\ Fb\ 1/EJ\ - 1\ \ (-1)\ \ (-1)\ \ Fb^2/EJ = -7/12\ \ Fb^2/EJ$

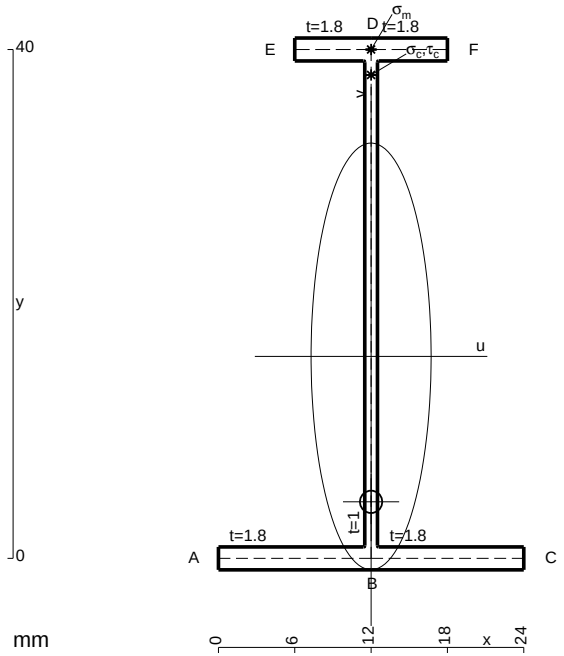

A = 104.8 mm^2
J_u = 29473. mm^4
J_v = 2333. mm^4
J_t = 83.32 mm^4
y_o = -11.43 mm
y_g = 15.88 mm
N = -465. N
T_y = 930. N
M_x = -297600. Nmm
x_m = 12. mm
y_m = 40. mm
v_m = 24.12 mm
$\sigma_m = N/A - Mv/J_u$ = 239.1 N/mm^2
y_c = 2. mm
u_c = -12. mm
v_c = -13.88 mm
$\sigma_c = N/A - Mv/J_u$ = 239.1 N/mm^2
$\tau_c = TS^*/tJ_u$ = 16.44 N/mm^2
$\tau_g = TS^*/tJ_u$ = 16.44 N/mm^2
t_c = 930. mm
$\sigma_o = \sqrt{\sigma^2 + 3\tau^2}$ = 240.8 N/mm^2

ESΣ05.xxxx.079

@ Adolfo Zavelani Rossi, Politecnico di Milano, vers.27.03.13 01.12.25

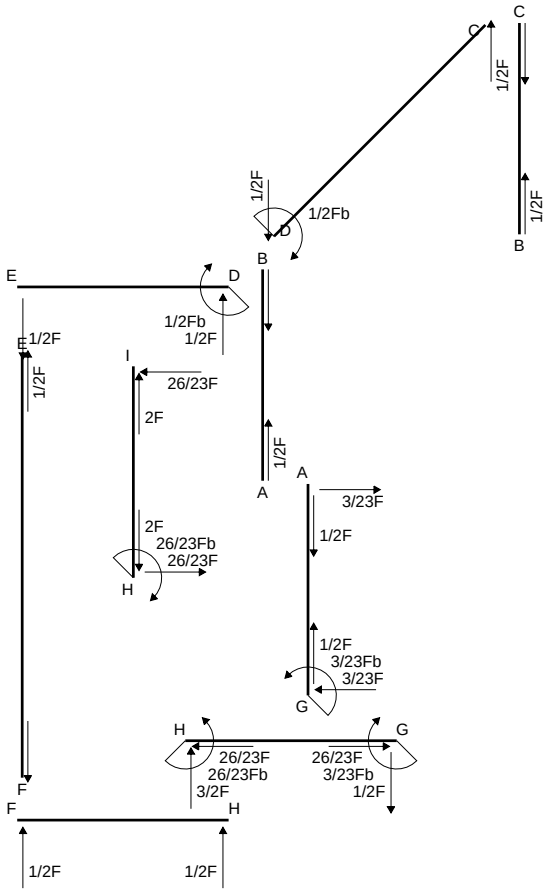
C
C
1/2F
1/2F
1/2Fb
D
B
B
E
D
1/2Fb
1/2F
E
1/2F
1/2F
I
26/23F
2F
1/2F
A
A
3/23F
1/2F
2F
26/23Fb
26/23F
H
1/2F
3/23Fb
3/23F
G
H
G
26/23F
26/23Fb
3/2F
26/23F
3/23Fb
1/2F
F
F
H
1/2F
1/2F

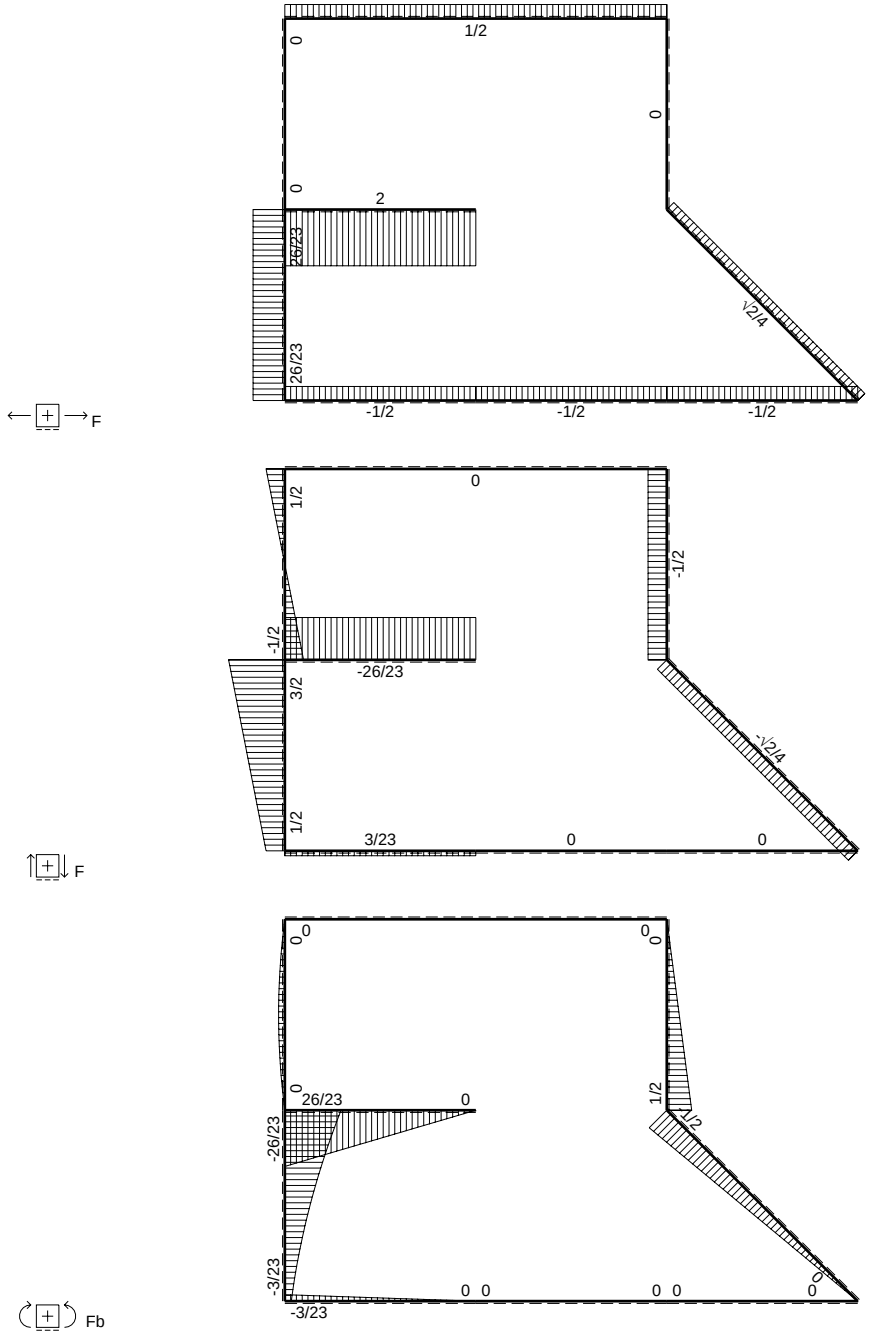
F
1/2
0
0
0
2
26/23
√2/4
26/23
-1/2
-1/2
-1/2
F
0
1/2
-1/2
-1/2
-26/23
3/2
√2/4
1/2
3/23
0
0
Fb
0
0
0
0
26/23
0
1/2
1/2
-26/23
-3/23
0 0
0 0
0
-3/23

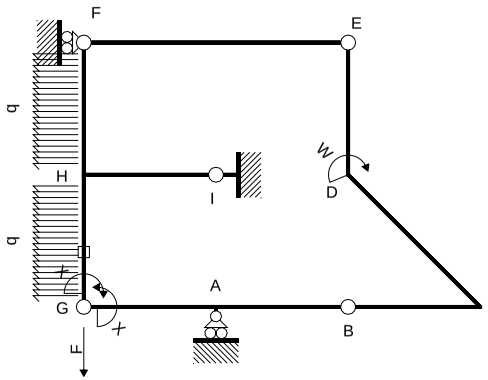

Schema di calcolo iperstatico

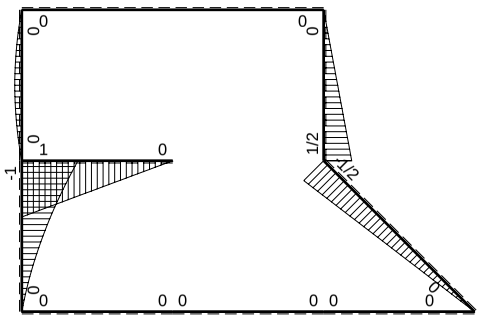

M_0 flessione da carichi assegnati

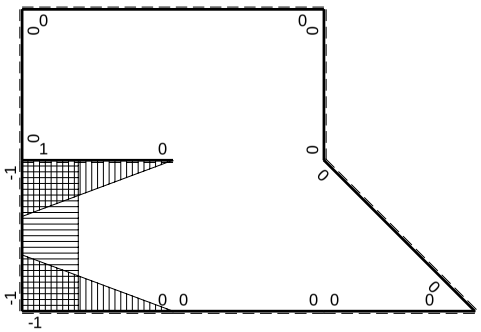

M_x flessione da iperstatica X=1

Quadro contributi PLV per iperstatica $X=W_{GA}$

→	$M_x(x)$	$M_o(x)$	M_xM_o	M_xM_x	$\int M_xM_o/EJdx$	$\int XM_xM_x/EJdx$
AB b	0	0	0	0	0	0
BA b	0	0	0	0		
BC b	0	0	0	0	0	0
CB b	0	0	0	0		
CD √2b	0	$-\sqrt{2}/4Fx$	0	0	0	0
DE b	0	1/2Fb-1/2Fx	0	0	0	0
ED b	0	-1/2Fx	0	0		
EF 2b	0	0	0	0	0	0
FE 2b	0	0	0	0		
GA b	-1+x/b	0	0	$1-2x/b+x^2/b^2$	0	1/3Xb/EJ
AG b	x/b	0	0	x^2/b^2		
FH b	0	$1/2Fx-1/2qx^2$	0	0	0	0
HF b	0	$-1/2Fx+1/2qx^2$	0	0		
HI b	1-x/b	Fb-Fx	$Fb-2Fx+Fx^2/b$	$1-2x/b+x^2/b^2$	$1/3Fb^2/EJ$	1/3Xb/EJ
IH b	-x/b	-Fx	Fx^2/b	x^2/b^2		
HG b	-1	$-Fb+3/2Fx-1/2qx^2$	$Fb-3/2Fx+1/2Fx^2/b$	1	$5/12Fb^2/EJ$	Xb/EJ
GH b	1	$1/2Fx+1/2qx^2$	$1/2Fx+1/2Fx^2/b$	1		
HG	elongazione asta $N_{1HG}\varepsilon_{HG}L_{HG}$				$-Fb^2/EJ$	
A	molla nodo $-V_{1A}(V_{0A}+XV_{1A})/k_A$					1/4Xb/EJ
	totali				$-1/4Fb^2/EJ$	23/12Xb/EJ
	iperstatica $X=W_{GA}$				3/23Fb	

Sviluppi di calcolo iperstatica

$L^{XX}_{GA} = \int_o^b (1 - 2\,x/b + x^2/b^2)\ 1/EJ\ dx = [\,x - x^2/b + 1/3\,x^3/b^2\,]_o^b\ 1/EJ$

$= (\,b - b + 1/3\,b\,)\ 1/EJ = 1/3\ b/EJ$

$L^{XX}_{AG} = \int_o^b (\,x^2/b^2\,)\ 1/EJ\ dx = [1/3\,x^3/b^2\,]_o^b\ 1/EJ$

$= (1/3\,b\,)\ 1/EJ = 1/3\ b/EJ$

$L^{XX}_{HI} = \int_o^b (1 - 2\,x/b + x^2/b^2)\ 1/EJ\ dx = [\,x - x^2/b + 1/3\,x^3/b^2\,]_o^b\ 1/EJ$

$= (\,b - b + 1/3\,b\,)\ 1/EJ = 1/3\ b/EJ$

$L^{XX}_{IH} = \int_o^b (\,x^2/b^2\,)\ 1/EJ\ dx = [1/3\,x^3/b^2\,]_o^b\ 1/EJ$

$= (1/3\,b\,)\ 1/EJ = 1/3\ b/EJ$

$L^{XX}_{HG} = \int_o^b (1)\ 1/EJ\ dx = [\,x\,]_o^b\ 1/EJ$

$= (\,b\,)\ 1/EJ = b/EJ$

$L^{XX}_{GH} = \int_o^b (1)\ 1/EJ\ dx = [\,x\,]_o^b\ 1/EJ$

$= (\,b\,)\ 1/EJ = b/EJ$

$L^{Xo}_{HI} = \int_o^b (1 - 2\,x/b + x^2/b^2)\ Fb\ 1/EJ\ dx = [\,x - x^2/b + 1/3\,x^3/b^2\,]_o^b\ Fb\ 1/EJ$

$= (\,b - b + 1/3\,b\,)\ Fb\ 1/EJ = 1/3\ Fb^2/EJ$

$L^{Xo}_{IH} = \int_o^b (\,x^2/b^2\,)\ Fb\ 1/EJ\ dx = [1/3\,x^3/b^2\,]_o^b\ Fb\ 1/EJ$

$= (1/3\,b\,)\ Fb\ 1/EJ = 1/3\ Fb^2/EJ$

$L^{Xo}_{HG} = \int_o^b (1 - 3/2\,x/b + 1/2\,x^2/b^2)\ Fb\ 1/EJ\ dx - 1\ \ (-1)\ \ (-1)\ \ Fb^2/EJ$

$= [\,x - 3/4\,x^2/b + 1/6\,x^3/b^2\,]_o^b\ Fb\ 1/EJ\ -\ 1\ \ (-1)\ \ (-1)\ \ Fb^2/EJ$

$= (\,b - 3/4\,b + 1/6\,b\,)\ Fb\ 1/EJ\ -\ 1\ \ (-1)\ \ (-1)\ \ Fb^2/EJ = -7/12\ \ Fb^2/EJ$

$L^{Xo}_{GH} = \int_o^b (1/2\,x/b + 1/2\,x^2/b^2)\ Fb\ 1/EJ\ dx - 1\ \ (-1)\ \ (-1)\ \ Fb^2/EJ$

$= [1/4\,x^2/b + 1/6\,x^3/b^2\,]_o^b\ Fb\ 1/EJ\ -\ 1\ \ (-1)\ \ (-1)\ \ Fb^2/EJ$

$= (1/4\,b + 1/6\,b\,)\ Fb\ 1/EJ\ -\ 1\ \ (-1)\ \ (-1)\ \ Fb^2/EJ = -7/12\ \ Fb^2/EJ$

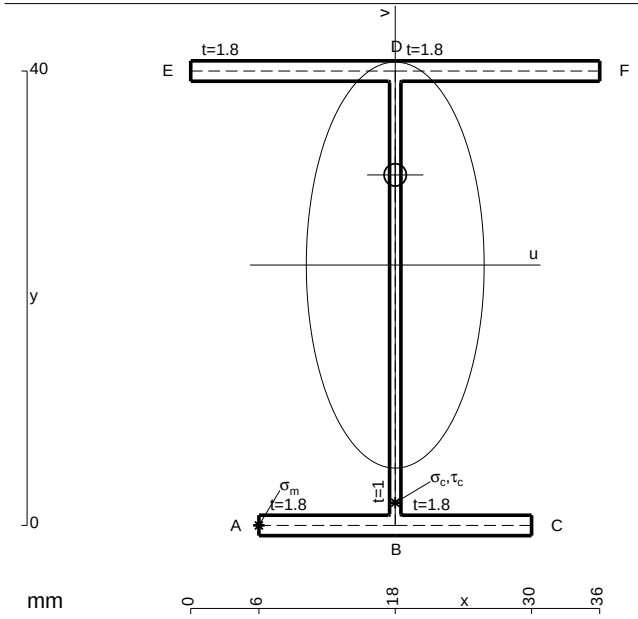

A = 148. mm^2
J_u = 47272. mm^4
J_v = 9072. mm^4
J_t = 130. mm^4
y_o = 7.938 mm
y_g = 22.92 mm
T_y = -1210. N
M_x = 411400. Nmm
x_m = 6. mm
u_m = -12. mm
v_m = -22.92 mm
$\sigma_m = -Mv/J_u$ = 199.5 N/mm^2
x_c = 18. mm
v_c = -22.92 mm
$\sigma_c = -Mv/J_u$ = 199.5 N/mm^2
$\tau_c = TS^*/tJ_u$ = 25.34 N/mm^2
$\tau_g = TS^*/tJ_u$ = 25.34 N/mm^2
t_c = 2420. mm
$\sigma_o = \sqrt{\sigma^2 + 3\tau^2}$ = 204.2 N/mm^2

ESΣ05.xxxx.080

@ Adolfo Zavelani Rossi, Politecnico di Milano, vers.27.03.13 01.12.25

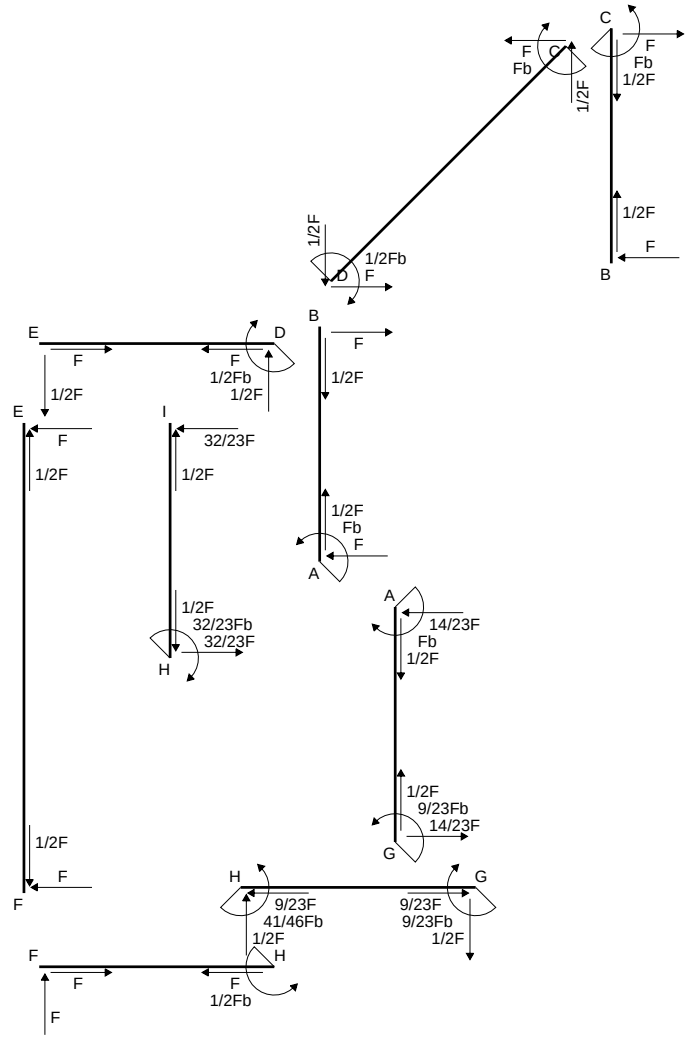
C
F
Fb
1/2F
F
Fb
1/2F
1/2F
F
B
1/2F
1/2Fb
F
D
E
F
F
1/2Fb
1/2F
B
F
1/2F
E
F
1/2F
I
32/23F
1/2F
1/2F
Fb
F
A
1/2F
32/23Fb
32/23F
H
A
14/23F
Fb
1/2F
1/2F
9/23Fb
14/23F
G
1/2F
F
F
H
9/23F
41/46Fb
1/2F
9/23F
9/23Fb
1/2F
G
F
F
F
1/2Fb
H
F

F

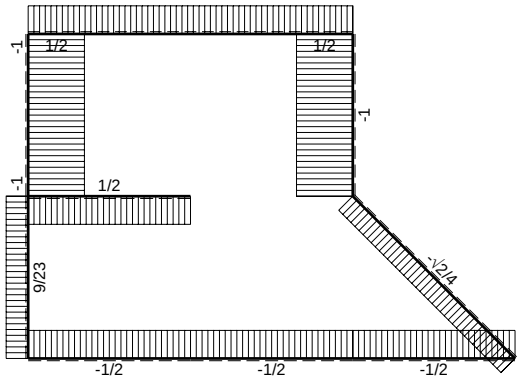
-1
1/2
1/2
-1
-1
1/2
9/23
-1/2
-1/2
-1/2
-1/2

F

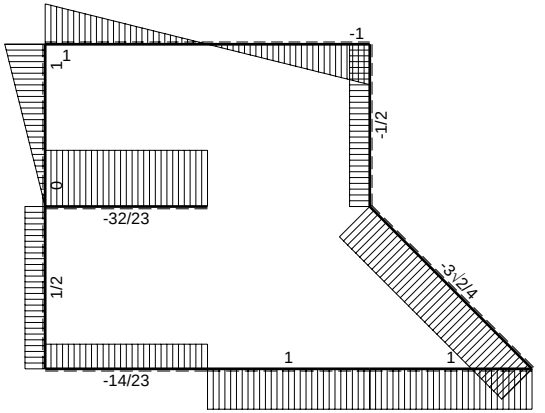
-1
1
1
-1/2
0
-32/23
1/2
-3/4
1
1
-14/23

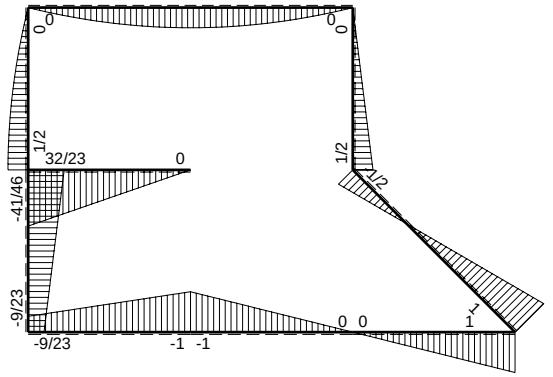
0
0
0
1/2
32/23
0
1/2
1/2
-41/46
-9/23
0
0
1
1
-9/23
-1
-1

Fb

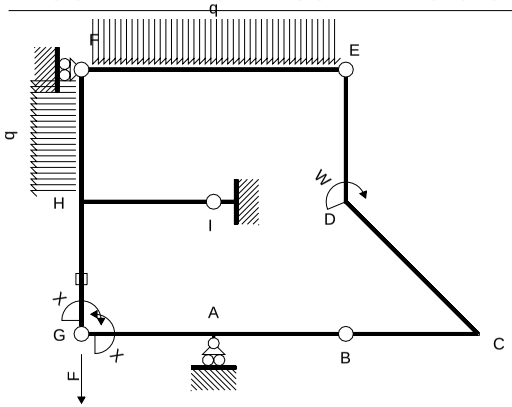

Schema di calcolo iperstatico

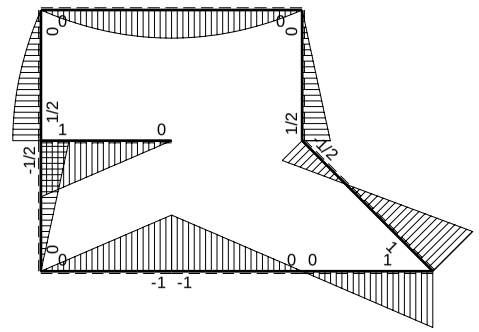

M_0 flessione da carichi assegnati

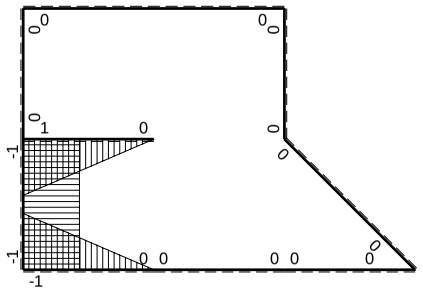

M_x flessione da iperstatica X=1

Quadro contributi PLV per iperstatica $X=W_{GA}$

→	$M_x(x)$	$M_o(x)$	M_xM_o	M_xM_x	$\int M_xM_o/EJdx$	$\int XM_xM_x/EJdx$
AB b	0	-Fb+Fx	0	0	0	0
BA b	0	Fx	0	0		
BC b	0	Fx	0	0	0	0
CB b	0	-Fb+Fx	0	0		
CD √2b	0	Fb-3√2/4Fx	0	0	0	0
DE b	0	1/2Fb-1/2Fx	0	0	0	0
ED b	0	-1/2Fx	0	0		
EF 2b	0	$-Fx+1/2qx^2$	0	0	0	0
FE 2b	0	$Fx-1/2qx^2$	0	0		
GA b	-1+x/b	-Fx	$Fx-Fx^2/b$	$1-2x/b+x^2/b^2$	$1/6Fb^2/EJ$	1/3Xb/EJ
AG b	x/b	Fb-Fx	$Fx-Fx^2/b$	x^2/b^2		
FH b	0	$Fx-1/2qx^2$	0	0	0	0
HF b	0	$-1/2Fb+1/2qx^2$	0	0		
HI b	1-x/b	Fb-Fx	$Fb-2Fx+Fx^2/b$	$1-2x/b+x^2/b^2$	$1/3Fb^2/EJ$	1/3Xb/EJ
IH b	-x/b	-Fx	Fx^2/b	x^2/b^2		
HG b	-1	-1/2Fb+1/2Fx	1/2Fb-1/2Fx	1	$1/4Fb^2/EJ$	Xb/EJ
GH b	1	1/2Fx	1/2Fx	1		
HG	elongazione asta $N_{1HG}\varepsilon_{HG}L_{HG}$				$-Fb^2/EJ$	
A	molla nodo $-V_{1A}(V_{0A}+XV_{1A})/k_A$				$-1/2Fb^2/EJ$	1/4Xb/EJ
	totali				$-3/4Fb^2/EJ$	23/12Xb/EJ
	iperstatica $X=W_{GA}$				9/23Fb	

Sviluppi di calcolo iperstatica

$L^{XX}_{GA} = \int_o^b (1 - 2\,x/b + x^2/b^2)\ 1/EJ\ dx = [\,x - x^2/b + 1/3\,x^3/b^2\,]_o^b\ 1/EJ$

$= (\,b - b + 1/3\,b\,)\ 1/EJ = 1/3\ b/EJ$

$L^{XX}_{AG} = \int_o^b (\,x^2/b^2\,)\ 1/EJ\ dx = [1/3\,x^3/b^2\,]_o^b\ 1/EJ$

$= (1/3\,b)\ 1/EJ = 1/3\ b/EJ$

$L^{XX}_{HI} = \int_o^b (1 - 2\,x/b + x^2/b^2)\ 1/EJ\ dx = [\,x - x^2/b + 1/3\,x^3/b^2\,]_o^b\ 1/EJ$

$= (\,b - b + 1/3\,b\,)\ 1/EJ = 1/3\ b/EJ$

$L^{XX}_{IH} = \int_o^b (\,x^2/b^2\,)\ 1/EJ\ dx = [1/3\,x^3/b^2\,]_o^b\ 1/EJ$

$= (1/3\,b)\ 1/EJ = 1/3\ b/EJ$

$L^{XX}_{HG} = \int_o^b (1)\ 1/EJ\ dx = [\,x\,]_o^b\ 1/EJ$

$= (\,b\,)\ 1/EJ = b/EJ$

$L^{XX}_{GH} = \int_o^b (1)\ 1/EJ\ dx = [\,x\,]_o^b\ 1/EJ$

$= (\,b\,)\ 1/EJ = b/EJ$

$L^{Xo}_{GA} = \int_o^b (\,x/b - x^2/b^2\,)\ Fb\ 1/EJ\ dx = [1/2\,x^2/b - 1/3\,x^3/b^2\,]_o^b\ Fb\ 1/EJ$

$= (1/2\,b - 1/3\,b\,)\ Fb\ 1/EJ = 1/6\ Fb^2/EJ$

$L^{Xo}_{AG} = \int_o^b (\,x/b - x^2/b^2\,)\ Fb\ 1/EJ\ dx = [1/2\,x^2/b - 1/3\,x^3/b^2\,]_o^b\ Fb\ 1/EJ$

$= (1/2\,b - 1/3\,b\,)\ Fb\ 1/EJ = 1/6\ Fb^2/EJ$

$L^{Xo}_{HI} = \int_o^b (1 - 2\,x/b + x^2/b^2)\ Fb\ 1/EJ\ dx = [\,x - x^2/b + 1/3\,x^3/b^2\,]_o^b\ Fb\ 1/EJ$

$= (\,b - b + 1/3\,b\,)\ Fb\ 1/EJ = 1/3\ Fb^2/EJ$

$L^{Xo}_{IH} = \int_o^b (\,x^2/b^2\,)\ Fb\ 1/EJ\ dx = [1/3\,x^3/b^2\,]_o^b\ Fb\ 1/EJ$

$= (1/3\,b)\ Fb\ 1/EJ = 1/3\ Fb^2/EJ$

$L^{Xo}_{HG} = \int_o^b (1/2 - 1/2\,x/b)\ Fb\ 1/EJ\ dx - 1\ \ (-1)\ \ (-1)\ \ Fb^2/EJ$

$= [1/2\,x - 1/4\,x^2/b\,]_o^b\ Fb\ 1/EJ\ -\ 1\ \ (-1)\ \ (-1)\ \ Fb^2/EJ$

$= (1/2\,b - 1/4\,b\,)\ Fb\ 1/EJ\ -\ 1\ \ (-1)\ \ (-1)\ \ Fb^2/EJ = -3/4\ \ Fb^2/EJ$

$L^{Xo}_{GH} = \int_o^b (1/2\,x/b)\ Fb\ 1/EJ\ dx - 1\ \ (-1)\ \ (-1)\ \ Fb^2/EJ = [1/4\,x^2/b\,]_o^b\ Fb\ 1/EJ\ -\ 1\ \ (-1)\ \ (-1)\ \ Fb^2/EJ$

$= (1/4\,b)\ Fb\ 1/EJ\ -\ 1\ \ (-1)\ \ (-1)\ \ Fb^2/EJ = -3/4\ \ Fb^2/EJ$

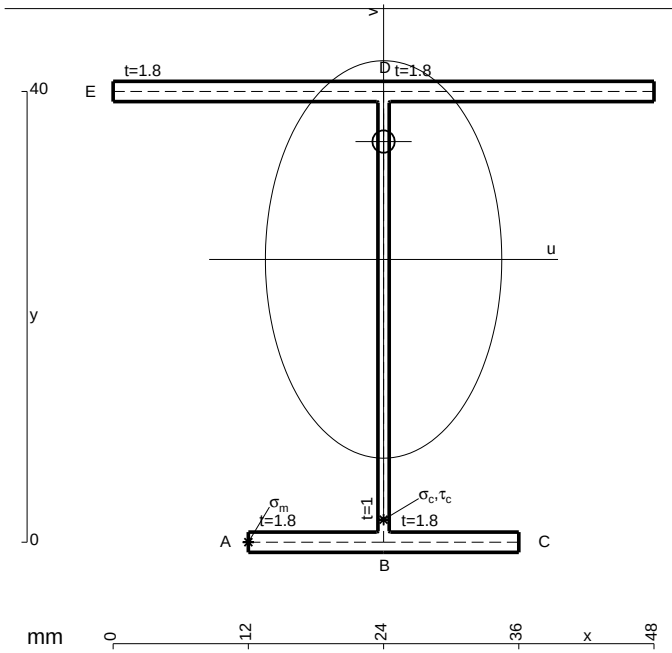

A = 169.6 mm^2
J_u = 52772. mm^4
J_v = 18662. mm^4
J_t = 153.3 mm^4
y_o = 10.46 mm
y_g = 25.09 mm
N = -424.3 N
T_y = -1273. N
M_x = 444000. Nmm
x_m = 12. mm
u_m = -12. mm
v_m = -25.09 mm
$\sigma_m = N/A - Mv/J_u$ = 208.6 N/mm^2
x_c = 24. mm
v_c = -25.09 mm
$\sigma_c = N/A - Mv/J_u$ = 208.6 N/mm^2
$\tau_c = TS^*/tJ_u$ = 26.15 N/mm^2
$\tau_g = TS^*/tJ_u$ = 26.15 N/mm^2
t_c = 1200. mm
$\sigma_o = \sqrt{\sigma^2 + 3\tau^2}$ = 213.5 N/mm^2

ESΣ05.xxxx.081

@ Adolfo Zavelani Rossi, Politecnico di Milano, vers.27.03.13 01.12.25

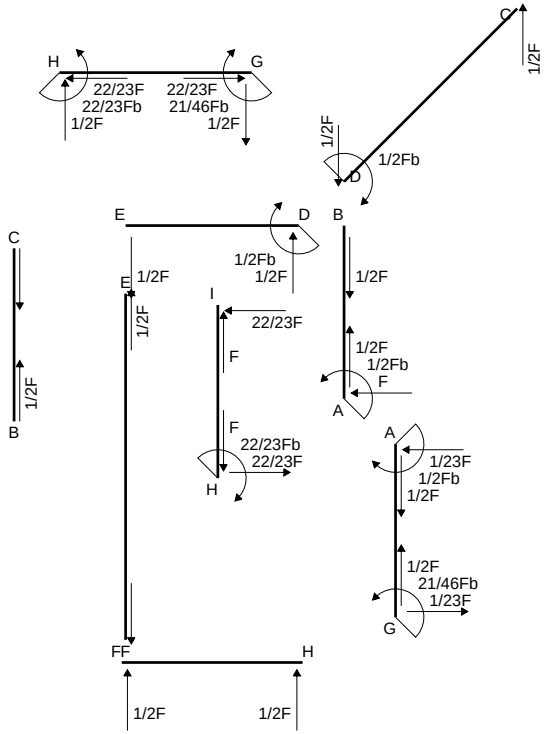
H
G
22/23F
22/23Fb
1/2F
22/23F
21/46Fb
1/2F
C
1/2F
1/2Fb
D
E
D
B
1/2Fb
1/2F
1/2F
C
1/2F
E
1/2F
I
22/23F
F
1/2F
1/2Fb
F
A
B
F
22/23Fb
22/23F
H
A
1/23F
1/2Fb
1/2F
1/2F
21/46Fb
1/23F
G
FF
H
1/2F
1/2F

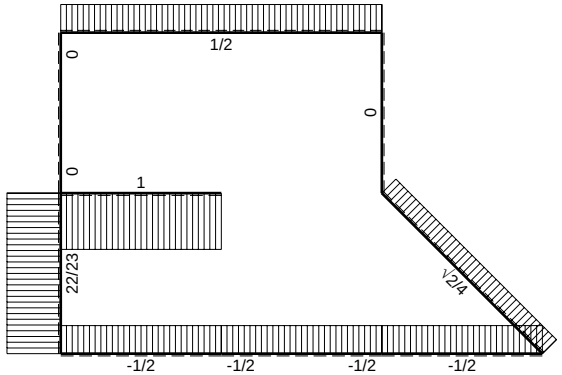
1/2
0
0
0
1
22/23
√2/4
-1/2
-1/2
-1/2
-1/2

F

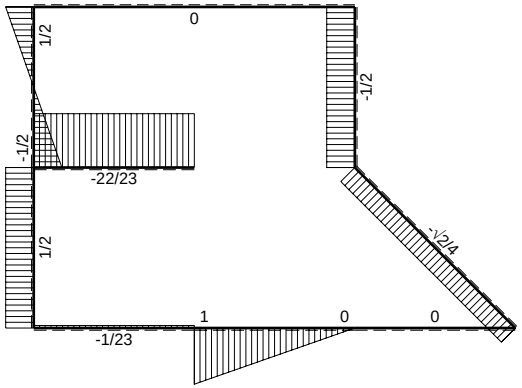
0
1/2
-1/2
-1/2
-22/23
1/2
√2/4
1
0
0
-1/23

F

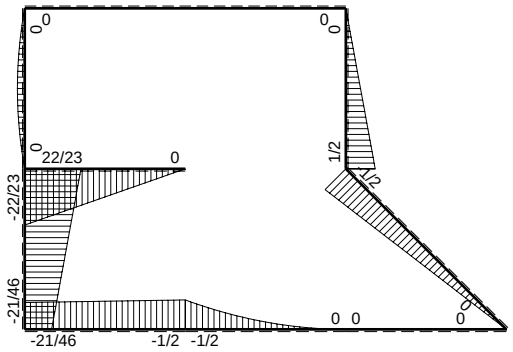
0
0
0
0
22/23
0
1/2
1/2
-22/23
-21/46
0
0
0
0
-21/46
-1/2
-1/2

Fb

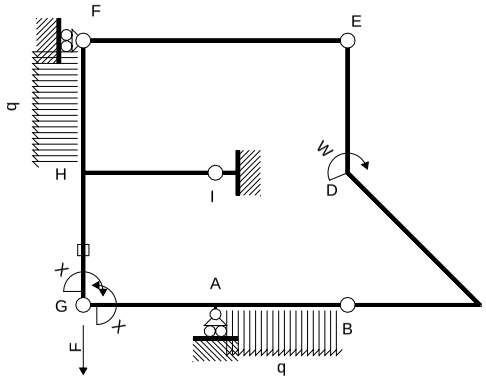

Schema di calcolo iperstatico

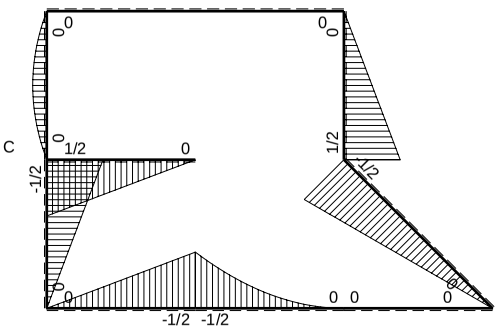

M_0 flessione da carichi assegnati

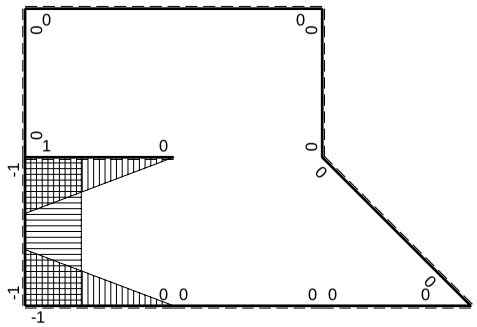

M_x flessione da iperstatica X=1

Quadro contributi PLV per iperstatica $X=W_{GA}$

→	$M_x(x)$	$M_o(x)$	M_xM_o	M_xM_x	$\int M_xM_o/EJdx$	$\int XM_xM_x/EJdx$
AB b	0	$-1/2Fb+Fx-1/2qx^2$	0	0	0	0
BA b	0	$1/2qx^2$	0	0		
BC b	0	0	0	0	0	0
CB b	0	0	0	0		
CD $\sqrt{2}$b	0	$-\sqrt{2}/4Fx$	0	0	0	0
DE b	0	$1/2Fb-1/2Fx$	0	0	0	0
ED b	0	$-1/2Fx$	0	0		
EF 2b	0	0	0	0	0	0
FE 2b	0	0	0	0		
GA b	$-1+x/b$	$-1/2Fx$	$1/2Fx-1/2Fx^2/b$	$1-2x/b+x^2/b^2$	$1/12Fb^2/EJ$	$1/3Xb/EJ$
AG b	x/b	$1/2Fb-1/2Fx$	$1/2Fx-1/2Fx^2/b$	x^2/b^2		
FH b	0	$1/2Fx-1/2qx^2$	0	0	0	0
HF b	0	$-1/2Fx+1/2qx^2$	0	0		
HI b	$1-x/b$	$1/2Fb-1/2Fx$	$1/2Fb-Fx+1/2Fx^2/b$	$1-2x/b+x^2/b^2$	$1/6Fb^2/EJ$	$1/3Xb/EJ$
IH b	$-x/b$	$-1/2Fx$	$1/2Fx^2/b$	x^2/b^2		
HG b	-1	$-1/2Fb+1/2Fx$	$1/2Fb-1/2Fx$	1	$1/4Fb^2/EJ$	Xb/EJ
GH b	1	$1/2Fx$	$1/2Fx$	1		
HG	elongazione asta $N_{1HG}\varepsilon_{HG}L_{HG}$				$-Fb^2/EJ$	
A	molla nodo $-V_{1A}(V_{0A}+XV_{1A})/k_A$				$-3/8Fb^2/EJ$	$1/4Xb/EJ$
	totali				$-7/8Fb^2/EJ$	$23/12Xb/EJ$
	iperstatica $X=W_{GA}$				21/46Fb	

Sviluppi di calcolo iperstatica

$L^{XX}_{GA} = \int_o^b (1 - 2\,x/b + x^2/b^2)\ 1/EJ\ dx = [\,x - x^2/b + 1/3\,x^3/b^2\,]_o^b\ 1/EJ$

$= (\,b - b + 1/3\,b\,)\ 1/EJ = 1/3\ b/EJ$

$L^{XX}_{AG} = \int_o^b (\,x^2/b^2\,)\ 1/EJ\ dx = [1/3\,x^3/b^2\,]_o^b\ 1/EJ$

$= (1/3\,b)\ 1/EJ = 1/3\ b/EJ$

$L^{XX}_{HI} = \int_o^b (1 - 2\,x/b + x^2/b^2)\ 1/EJ\ dx = [\,x - x^2/b + 1/3\,x^3/b^2\,]_o^b\ 1/EJ$

$= (\,b - b + 1/3\,b\,)\ 1/EJ = 1/3\ b/EJ$

$L^{XX}_{IH} = \int_o^b (\,x^2/b^2\,)\ 1/EJ\ dx = [1/3\,x^3/b^2\,]_o^b\ 1/EJ$

$= (1/3\,b)\ 1/EJ = 1/3\ b/EJ$

$L^{XX}_{HG} = \int_o^b (1)\ 1/EJ\ dx = [\,x\,]_o^b\ 1/EJ$

$= (\,b\,)\ 1/EJ = b/EJ$

$L^{XX}_{GH} = \int_o^b (1)\ 1/EJ\ dx = [\,x\,]_o^b\ 1/EJ$

$= (\,b\,)\ 1/EJ = b/EJ$

$L^{Xo}_{GA} = \int_o^b (1/2\,x/b - 1/2\,x^2/b^2)\ Fb\ 1/EJ\ dx = [1/4\,x^2/b - 1/6\,x^3/b^2\,]_o^b\ Fb\ 1/EJ$

$= (1/4\,b - 1/6\,b)\ Fb\ 1/EJ = 1/12\ Fb^2/EJ$

$L^{Xo}_{AG} = \int_o^b (1/2\,x/b - 1/2\,x^2/b^2)\ Fb\ 1/EJ\ dx = [1/4\,x^2/b - 1/6\,x^3/b^2\,]_o^b\ Fb\ 1/EJ$

$= (1/4\,b - 1/6\,b)\ Fb\ 1/EJ = 1/12\ Fb^2/EJ$

$L^{Xo}_{HI} = \int_o^b (1/2 - x/b + 1/2\,x^2/b^2)\ Fb\ 1/EJ\ dx = [1/2\,x - 1/2\,x^2/b + 1/6\,x^3/b^2\,]_o^b\ Fb\ 1/EJ$

$= (1/2\,b - 1/2\,b + 1/6\,b)\ Fb\ 1/EJ = 1/6\ Fb^2/EJ$

$L^{Xo}_{IH} = \int_o^b (1/2\,x^2/b^2)\ Fb\ 1/EJ\ dx = [1/6\,x^3/b^2\,]_o^b\ Fb\ 1/EJ$

$= (1/6\,b)\ Fb\ 1/EJ = 1/6\ Fb^2/EJ$

$L^{Xo}_{HG} = \int_o^b (1/2 - 1/2\,x/b)\ Fb\ 1/EJ\ dx - 1\ \ (-1)\ \ (-1)\ \ Fb^2/EJ$

$= [1/2\,x - 1/4\,x^2/b\,]_o^b\ Fb\ 1/EJ\ - 1\ \ (-1)\ \ (-1)\ \ Fb^2/EJ$

$= (1/2\,b - 1/4\,b)\ Fb\ 1/EJ\ - 1\ \ (-1)\ \ (-1)\ \ Fb^2/EJ = -3/4\ \ Fb^2/EJ$

$L^{Xo}_{GH} = \int_o^b (1/2\,x/b)\ Fb\ 1/EJ\ dx - 1\ \ (-1)\ \ (-1)\ \ Fb^2/EJ = [1/4\,x^2/b\,]_o^b\ Fb\ 1/EJ\ - 1\ \ (-1)\ \ (-1)\ \ Fb^2/EJ$

$= (1/4\,b)\ Fb\ 1/EJ\ - 1\ \ (-1)\ \ (-1)\ \ Fb^2/EJ = -3/4\ \ Fb^2/EJ$

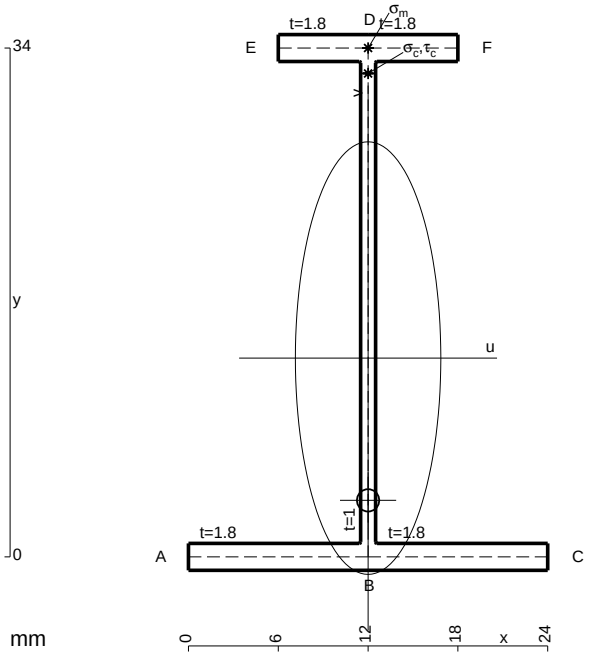

A = 98.8 mm^2
J_u = 20638. mm^4
J_v = 2333. mm^4
J_t = 81.32 mm^4
y_o = -9.506 mm
y_g = 13.28 mm
N = -660. N
T_y = 1320. N
M_x = -224400. Nmm
x_m = 12. mm
y_m = 34. mm
v_m = 20.72 mm
$\sigma_m = N/A - Mv/J_u$ = 218.6 N/mm^2
y_c = 2. mm
u_c = -12. mm
v_c = -11.28 mm
$\sigma_c = N/A - Mv/J_u$ = 218.6 N/mm^2
$\tau_c = TS^*/tJ_u$ = 28.62 N/mm^2
$\tau_g = TS^*/tJ_u$ = 28.62 N/mm^2
t_c = 1320. mm
$\sigma_o = \sqrt{\sigma^2 + 3\tau^2}$ = 224.1 N/mm^2

ESΣ05.xxxx.082

@ Adolfo Zavelani Rossi, Politecnico di Milano, vers.27.03.13 01.12.25

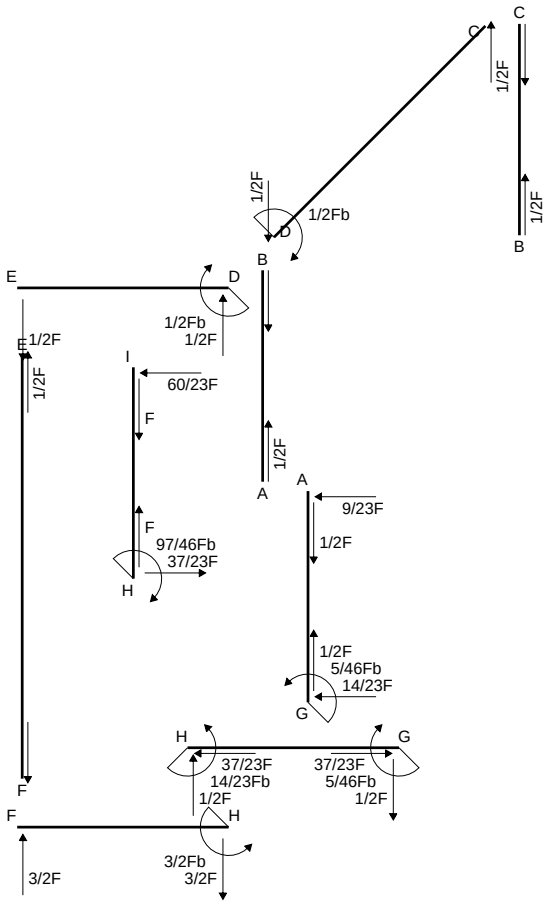
C
C
1/2F
1/2F
B
1/2Fb
D
1/2F
B
E
D
1/2Fb
1/2F
E
1/2F
1/2F
I
60/23F
F
1/2F
A
A
9/23F
F
97/46Fb
37/23F
H
1/2F
1/2F
5/46Fb
14/23F
G
H
G
37/23F
14/23Fb
1/2F
37/23F
5/46Fb
1/2F
F
H
F
3/2Fb
3/2F
3/2F

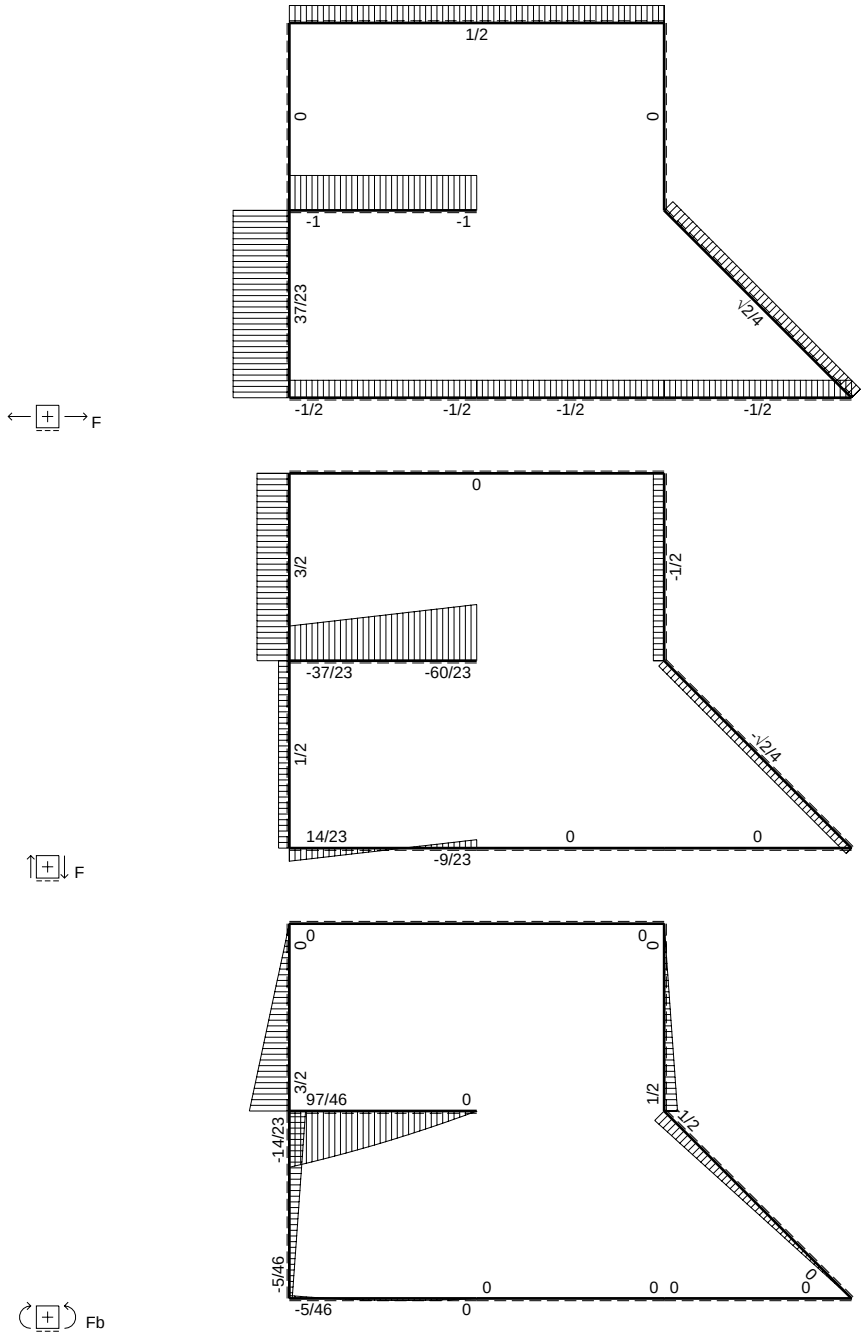
F
1/2
0
0
-1
-1
37/23
√2/4
-1/2
-1/2
-1/2
-1/2
F
0
3/2
-1/2
-37/23
-60/23
1/2
-√2/4
14/23
0
0
-9/23
Fb
0
0
0
0
3/2
97/46
0
1/2
-1/2
-14/23
-5/46
0
0
0 0
0
-5/46
0

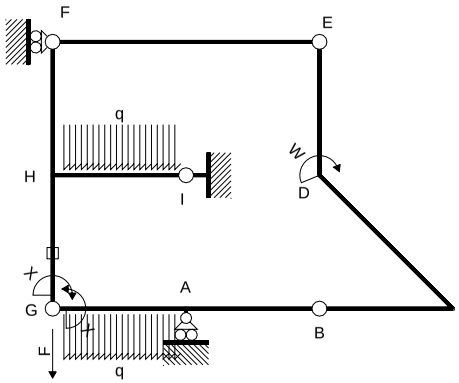

Schema di calcolo iperstatico

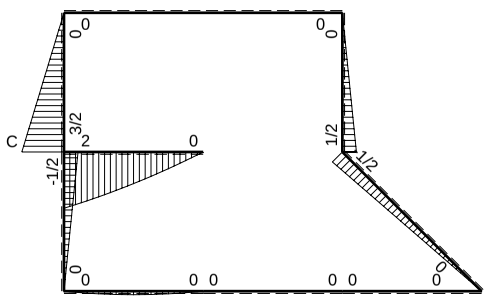

M_0 flessione da carichi assegnati

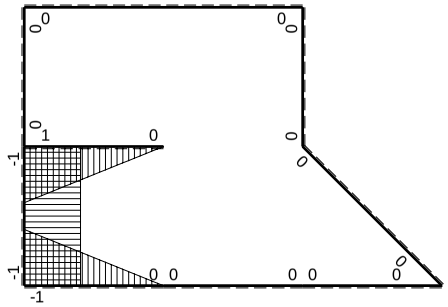

M_x flessione da iperstatica X=1

PROCEDIMENTO E RISULTATI 236511 ESΣ05.xxxx.083

@ Adolfo Zavelani Rossi, Politecnico di Milano, vers.27.03.13 01.12.25

Quadro contributi PLV per iperstatica $X=W_{GA}$

→	$M_x(x)$	$M_o(x)$	M_xM_o	M_xM_x	$\int M_xM_o/EJdx$	$\int XM_xM_x/EJdx$
AB b	0	0	0	0	0	0
BA b	0	0	0	0		
BC b	0	0	0	0	0	0
CB b	0	0	0	0		
CD $\sqrt{2}b$	0	$-\sqrt{2}/4Fx$	0	0	0	0
DE b	0	1/2Fb-1/2Fx	0	0	0	0
ED b	0	-1/2Fx	0	0		
EF 2b	0	0	0	0	0	0
FE 2b	0	0	0	0		
GA b	-1+x/b	$1/2Fx-1/2qx^2$	$-1/2Fx+Fx^2/b-1/2qx^3/b$	$1-2x/b+x^2/b^2$	$-1/24Fb^2/EJ$	1/3Xb/EJ
AG b	x/b	$-1/2Fx+1/2qx^2$	$-1/2Fx^2/b+1/2qx^3/b$	x^2/b^2		
FH b	0	3/2Fx	0	0	0	0
HF b	0	-3/2Fb+3/2Fx	0	0		
HI b	1-x/b	$2Fb-3/2Fx-1/2qx^2$	$2Fb-7/2Fx+Fx^2/b+1/2qx^3/b$	$1-2x/b+x^2/b^2$	$17/24Fb^2/EJ$	1/3Xb/EJ
IH b	-x/b	$-5/2Fx+1/2qx^2$	$5/2Fx^2/b-1/2qx^3/b$	x^2/b^2		
HG b	-1	-1/2Fb+1/2Fx	1/2Fb-1/2Fx	1	$1/4Fb^2/EJ$	Xb/EJ
GH b	1	1/2Fx	1/2Fx	1		
HG	elongazione asta $N_{1HG}\varepsilon_{HG}L_{HG}$				$-Fb^2/EJ$	
A	molla nodo $-V_{1A}(V_{oA}+XV_{1A})/k_A$				$-1/8Fb^2/EJ$	1/4Xb/EJ
	totali				$-5/24Fb^2/EJ$	23/12Xb/EJ
	iperstatica $X=W_{GA}$				5/46Fb	

PROCEDIMENTO E RISULTATI 236511 ESΣ05.xxxx.083

Sviluppi di calcolo iperstatica

@ Adolfo Zavelani Rossi, Politecnico di Milano, vers.27.03.13 01.12.25

$L^{XX}_{GA} = \int_o^b (1 - 2\,x/b + x^2/b^2)\ 1/EJ\ dx = [\,x - x^2/b + 1/3\,x^3/b^2\,]_o^b\ 1/EJ$

$= (\,b - b + 1/3\,b\,)\ 1/EJ\ = 1/3\ b/EJ$

$L^{XX}_{AG} = \int_o^b (\,x^2/b^2\,)\ 1/EJ\ dx = [1/3\,x^3/b^2\,]_o^b\ 1/EJ$

$= (1/3\,b\,)\ 1/EJ\ = 1/3\ b/EJ$

$L^{XX}_{HI} = \int_o^b (1 - 2\,x/b + x^2/b^2)\ 1/EJ\ dx = [\,x - x^2/b + 1/3\,x^3/b^2\,]_o^b\ 1/EJ$

$= (\,b - b + 1/3\,b\,)\ 1/EJ\ = 1/3\ b/EJ$

$L^{XX}_{IH} = \int_o^b (\,x^2/b^2\,)\ 1/EJ\ dx = [1/3\,x^3/b^2\,]_o^b\ 1/EJ$

$= (1/3\,b\,)\ 1/EJ\ = 1/3\ b/EJ$

$L^{XX}_{HG} = \int_o^b (1)\ 1/EJ\ dx = [\,x\,]_o^b\ 1/EJ$

$= (\,b\,)\ 1/EJ\ = b/EJ$

$L^{XX}_{GH} = \int_o^b (1)\ 1/EJ\ dx = [\,x\,]_o^b\ 1/EJ$

$= (\,b\,)\ 1/EJ\ = b/EJ$

$L^{Xo}_{GA} = \int_o^b (-1/2\,x/b + x^2/b^2 - 1/2\,x^3/b^3)\ Fb\ 1/EJ\ dx = [-1/4\,x^2/b + 1/3\,x^3/b^2 - 1/8\,x^4/b^3\,]_o^b\ Fb\ 1/EJ$

$= (-1/4\,b + 1/3\,b - 1/8\,b)\ Fb\ 1/EJ\ = -1/24\ Fb^2/EJ$

$L^{Xo}_{AG} = \int_o^b (-1/2\,x^2/b^2 + 1/2\,x^3/b^3)\ Fb\ 1/EJ\ dx = [-1/6\,x^3/b^2 + 1/8\,x^4/b^3\,]_o^b\ Fb\ 1/EJ$

$= (-1/6\,b + 1/8\,b)\ Fb\ 1/EJ\ = -1/24\ Fb^2/EJ$

$L^{Xo}_{HI} = \int_o^b (2 - 7/2\,x/b + x^2/b^2 + 1/2\,x^3/b^3)\ Fb\ 1/EJ\ dx = [2\,x - 7/4\,x^2/b + 1/3\,x^3/b^2 + 1/8\,x^4/b^3\,]_o^b\ Fb\ 1/EJ$

$= (2\,b - 7/4\,b + 1/3\,b + 1/8\,b)\ Fb\ 1/EJ\ = 17/24\ Fb^2/EJ$

$L^{Xo}_{IH} = \int_o^b (5/2\,x^2/b^2 - 1/2\,x^3/b^3)\ Fb\ 1/EJ\ dx = [5/6\,x^3/b^2 - 1/8\,x^4/b^3\,]_o^b\ Fb\ 1/EJ$

$= (5/6\,b - 1/8\,b)\ Fb\ 1/EJ\ = 17/24\ Fb^2/EJ$

$L^{Xo}_{HG} = \int_o^b (1/2 - 1/2\,x/b)\ Fb\ 1/EJ\ dx - 1\ \ (-1)\ \ (-1)\ \ Fb^2/EJ$

$= [1/2\,x - 1/4\,x^2/b\,]_o^b\ Fb\ 1/EJ\ - 1\ \ (-1)\ \ (-1)\ \ Fb^2/EJ$

$= (1/2\,b - 1/4\,b)\ Fb\ 1/EJ\ - 1\ \ (-1)\ \ (-1)\ \ Fb^2/EJ = -3/4\ Fb^2/EJ$

$L^{Xo}_{GH} = \int_o^b (1/2\,x/b)\ Fb\ 1/EJ\ dx - 1\ \ (-1)\ \ (-1)\ \ Fb^2/EJ = [1/4\,x^2/b\,]_o^b\ Fb\ 1/EJ\ - 1\ \ (-1)\ \ (-1)\ \ Fb^2/EJ$

$= (1/4\,b)\ Fb\ 1/EJ\ - 1\ \ (-1)\ \ (-1)\ \ Fb^2/EJ = -3/4\ Fb^2/EJ$

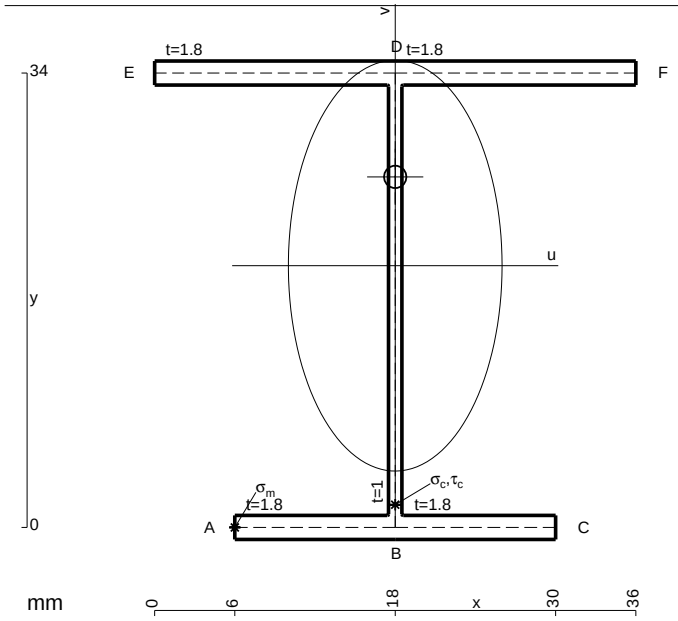

A = 142. mm^2
J_u = 33538. mm^4
J_v = 9072. mm^4
J_t = 128. mm^4
y_o = 6.643 mm
y_g = 19.59 mm
T_y = 1050. N
M_x = 388500. Nmm
x_m = 6. mm
u_m = -12. mm
v_m = -19.59 mm
$\sigma_m = -Mv/J_u$ = 226.9 N/mm^2
x_c = 18. mm
v_c = -19.59 mm
$\sigma_c = -Mv/J_u$ = 226.9 N/mm^2
$\tau_c = TS^*/tJ_u$ = 26.49 N/mm^2
$\tau_g = TS^*/tJ_u$ = 26.49 N/mm^2
t_c = 700. mm
$\sigma_o = \sqrt{\sigma^2 + 3\tau^2}$ = 231.5 N/mm^2

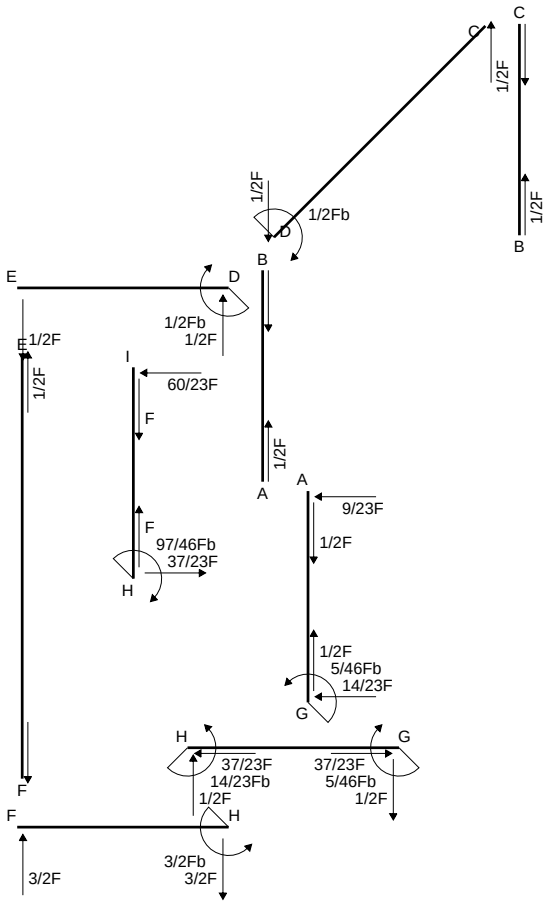
C
C
1/2F
1/2F
B
1/2Fb
D
1/2F
B
E
D
1/2Fb
1/2F
E
1/2F
1/2F
I
60/23F
F
1/2F
A
A
9/23F
F
97/46Fb
37/23F
H
1/2F
1/2F
5/46Fb
14/23F
G
H
G
37/23F
14/23Fb
1/2F
37/23F
5/46Fb
1/2F
F
H
F
3/2Fb
3/2F
3/2F

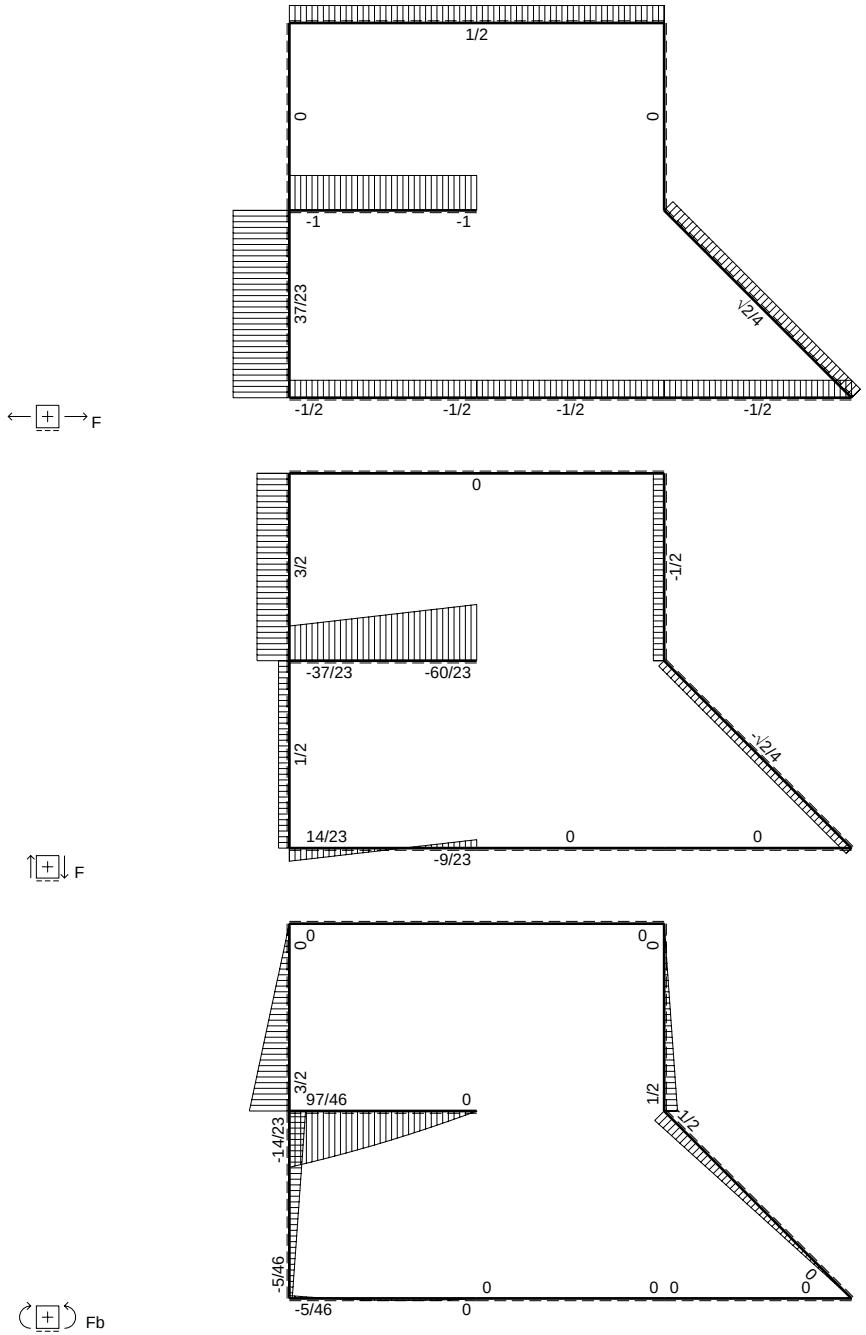
F
1/2
0
0
-1
-1
37/23
√2/4
-1/2
-1/2
-1/2
-1/2
F
0
3/2
-1/2
-37/23
-60/23
1/2
-√2/4
14/23
0
0
-9/23
Fb
0
0
0
0
3/2
97/46
0
1/2
-1/2
-14/23
-5/46
0
0
0 0
0
-5/46
0

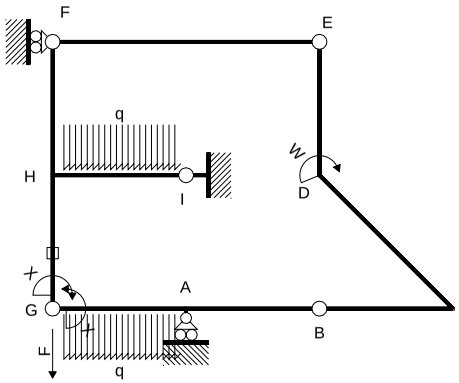

Schema di calcolo iperstatico

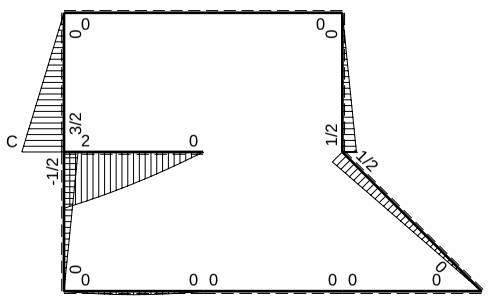

M_0 flessione da carichi assegnati

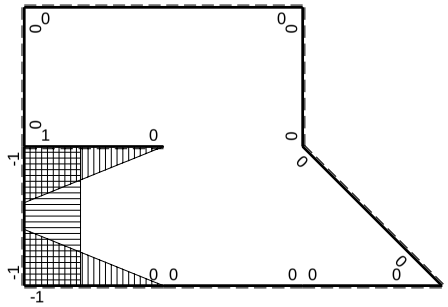

M_x flessione da iperstatica X=1

PROCEDIMENTO E RISULTATI 236427 ESΣ05.xxxx.084

@ Adolfo Zavelani Rossi, Politecnico di Milano, vers.27.03.13 01.12.25

Quadro contributi PLV per iperstatica $X=W_{GA}$

→	$M_x(x)$	$M_o(x)$	M_xM_o	M_xM_x	$\int M_xM_o/EJdx$	$\int XM_xM_x/EJdx$
AB b	0	0	0	0	0	0
BA b	0	0	0	0		
BC b	0	0	0	0	0	0
CB b	0	0	0	0		
CD $\sqrt{2}b$	0	$-\sqrt{2}/4Fx$	0	0	0	0
DE b	0	1/2Fb-1/2Fx	0	0	0	0
ED b	0	-1/2Fx	0	0		
EF 2b	0	0	0	0	0	0
FE 2b	0	0	0	0		
GA b	-1+x/b	$1/2Fx-1/2qx^2$	$-1/2Fx+Fx^2/b-1/2qx^3/b$	$1-2x/b+x^2/b^2$	$-1/24Fb^2/EJ$	1/3Xb/EJ
AG b	x/b	$-1/2Fx+1/2qx^2$	$-1/2Fx^2/b+1/2qx^3/b$	x^2/b^2		
FH b	0	3/2Fx	0	0	0	0
HF b	0	-3/2Fb+3/2Fx	0	0		
HI b	1-x/b	$2Fb-3/2Fx-1/2qx^2$	$2Fb-7/2Fx+Fx^2/b+1/2qx^3/b$	$1-2x/b+x^2/b^2$	$17/24Fb^2/EJ$	1/3Xb/EJ
IH b	-x/b	$-5/2Fx+1/2qx^2$	$5/2Fx^2/b-1/2qx^3/b$	x^2/b^2		
HG b	-1	-1/2Fb+1/2Fx	1/2Fb-1/2Fx	1	$1/4Fb^2/EJ$	Xb/EJ
GH b	1	1/2Fx	1/2Fx	1		
HG	elongazione asta $N_{1HG}\varepsilon_{HG}L_{HG}$				$-Fb^2/EJ$	
A	molla nodo $-V_{1A}(V_{oA}+XV_{1A})/k_A$				$-1/8Fb^2/EJ$	1/4Xb/EJ
	totali				$-5/24Fb^2/EJ$	23/12Xb/EJ
	iperstatica $X=W_{GA}$				5/46Fb	

PROCEDIMENTO E RISULTATI 236427 ESΣ05.xxxx.084

Sviluppi di calcolo iperstatica

@ Adolfo Zavelani Rossi, Politecnico di Milano, vers.27.03.13 01.12.25

$L^{XX}_{GA} = \int_o^b (1 - 2\,x/b + x^2/b^2)\ 1/EJ\ dx = [\,x - x^2/b + 1/3\,x^3/b^2\,]_o^b\ 1/EJ$

$= (\,b - b + 1/3\,b\,)\ 1/EJ\ = 1/3\ b/EJ$

$L^{XX}_{AG} = \int_o^b (\,x^2/b^2\,)\ 1/EJ\ dx = [1/3\,x^3/b^2\,]_o^b\ 1/EJ$

$= (1/3\,b\,)\ 1/EJ\ = 1/3\ b/EJ$

$L^{XX}_{HI} = \int_o^b (1 - 2\,x/b + x^2/b^2)\ 1/EJ\ dx = [\,x - x^2/b + 1/3\,x^3/b^2\,]_o^b\ 1/EJ$

$= (\,b - b + 1/3\,b\,)\ 1/EJ\ = 1/3\ b/EJ$

$L^{XX}_{IH} = \int_o^b (\,x^2/b^2\,)\ 1/EJ\ dx = [1/3\,x^3/b^2\,]_o^b\ 1/EJ$

$= (1/3\,b\,)\ 1/EJ\ = 1/3\ b/EJ$

$L^{XX}_{HG} = \int_o^b (1)\ 1/EJ\ dx = [\,x\,]_o^b\ 1/EJ$

$= (\,b\,)\ 1/EJ\ = b/EJ$

$L^{XX}_{GH} = \int_o^b (1)\ 1/EJ\ dx = [\,x\,]_o^b\ 1/EJ$

$= (\,b\,)\ 1/EJ\ = b/EJ$

$L^{Xo}_{GA} = \int_o^b (-1/2\,x/b + x^2/b^2 - 1/2\,x^3/b^3)\ Fb\ 1/EJ\ dx = [-1/4\,x^2/b + 1/3\,x^3/b^2 - 1/8\,x^4/b^3\,]_o^b\ Fb\ 1/EJ$

$= (-1/4\,b + 1/3\,b - 1/8\,b)\ Fb\ 1/EJ\ = -1/24\ Fb^2/EJ$

$L^{Xo}_{AG} = \int_o^b (-1/2\,x^2/b^2 + 1/2\,x^3/b^3)\ Fb\ 1/EJ\ dx = [-1/6\,x^3/b^2 + 1/8\,x^4/b^3\,]_o^b\ Fb\ 1/EJ$

$= (-1/6\,b + 1/8\,b)\ Fb\ 1/EJ\ = -1/24\ Fb^2/EJ$

$L^{Xo}_{HI} = \int_o^b (2 - 7/2\,x/b + x^2/b^2 + 1/2\,x^3/b^3)\ Fb\ 1/EJ\ dx = [2\,x - 7/4\,x^2/b + 1/3\,x^3/b^2 + 1/8\,x^4/b^3\,]_o^b\ Fb\ 1/EJ$

$= (2\,b - 7/4\,b + 1/3\,b + 1/8\,b)\ Fb\ 1/EJ\ = 17/24\ Fb^2/EJ$

$L^{Xo}_{IH} = \int_o^b (5/2\,x^2/b^2 - 1/2\,x^3/b^3)\ Fb\ 1/EJ\ dx = [5/6\,x^3/b^2 - 1/8\,x^4/b^3\,]_o^b\ Fb\ 1/EJ$

$= (5/6\,b - 1/8\,b)\ Fb\ 1/EJ\ = 17/24\ Fb^2/EJ$

$L^{Xo}_{HG} = \int_o^b (1/2 - 1/2\,x/b)\ Fb\ 1/EJ\ dx - 1\ \ (-1)\ \ (-1)\ \ Fb^2/EJ$

$= [1/2\,x - 1/4\,x^2/b\,]_o^b\ Fb\ 1/EJ\ - 1\ \ (-1)\ \ (-1)\ \ Fb^2/EJ$

$= (1/2\,b - 1/4\,b)\ Fb\ 1/EJ\ - 1\ \ (-1)\ \ (-1)\ \ Fb^2/EJ = -3/4\ \ Fb^2/EJ$

$L^{Xo}_{GH} = \int_o^b (1/2\,x/b)\ Fb\ 1/EJ\ dx - 1\ \ (-1)\ \ (-1)\ \ Fb^2/EJ = [1/4\,x^2/b\,]_o^b\ Fb\ 1/EJ\ - 1\ \ (-1)\ \ (-1)\ \ Fb^2/EJ$

$= (1/4\,b)\ Fb\ 1/EJ\ - 1\ \ (-1)\ \ (-1)\ \ Fb^2/EJ = -3/4\ \ Fb^2/EJ$

PROCEDIMENTO E RISULTATI 236427 ESΣ05.xxxx.084

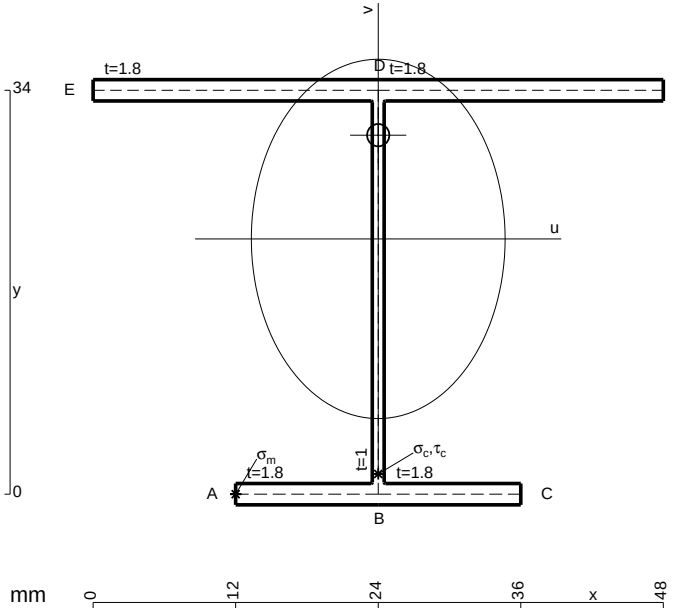

A = 163.6 mm^2
J_u = 37433. mm^4
J_v = 18662. mm^4
J_t = 151.3 mm^4
y_o = 8.733 mm
y_g = 21.49 mm
T_y = 1035. N
M_x = 414000. Nmm
x_m = 12. mm
u_m = -12. mm
v_m = -21.49 mm
$\sigma_m = -Mv/J_u$ = 237.7 N/mm^2
x_c = 24. mm
v_c = -21.49 mm
$\sigma_c = -Mv/J_u$ = 237.7 N/mm^2
$\tau_c = TS^*/tJ_u$ = 25.67 N/mm^2
$\tau_g = TS^*/tJ_u$ = 25.67 N/mm^2
t_c = 690. mm
$\sigma_o = \sqrt{\sigma^2 + 3\tau^2}$ = 241.8 N/mm^2

@ Adolfo Zavelani Rossi, Politecnico di Milano, vers.27.03.13 01.12.25

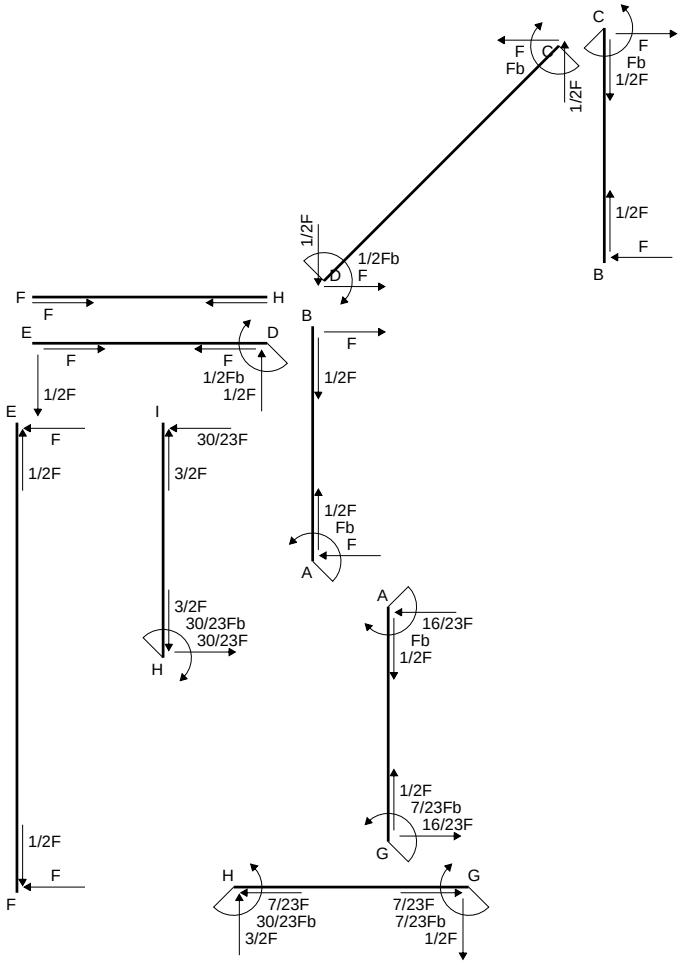
C
F
Fb
1/2F
F
Fb
1/2F
1/2F
F
B
1/2F
1/2Fb
F
D
F
H
F
E
D
F
F
1/2Fb
1/2F
1/2F
B
F
1/2F
E
F
1/2F
I
30/23F
3/2F
1/2F
Fb
F
A
3/2F
30/23Fb
30/23F
H
A
16/23F
Fb
1/2F
1/2F
7/23Fb
16/23F
G
1/2F
F
F
H
7/23F
30/23Fb
3/2F
7/23F
7/23Fb
1/2F
G

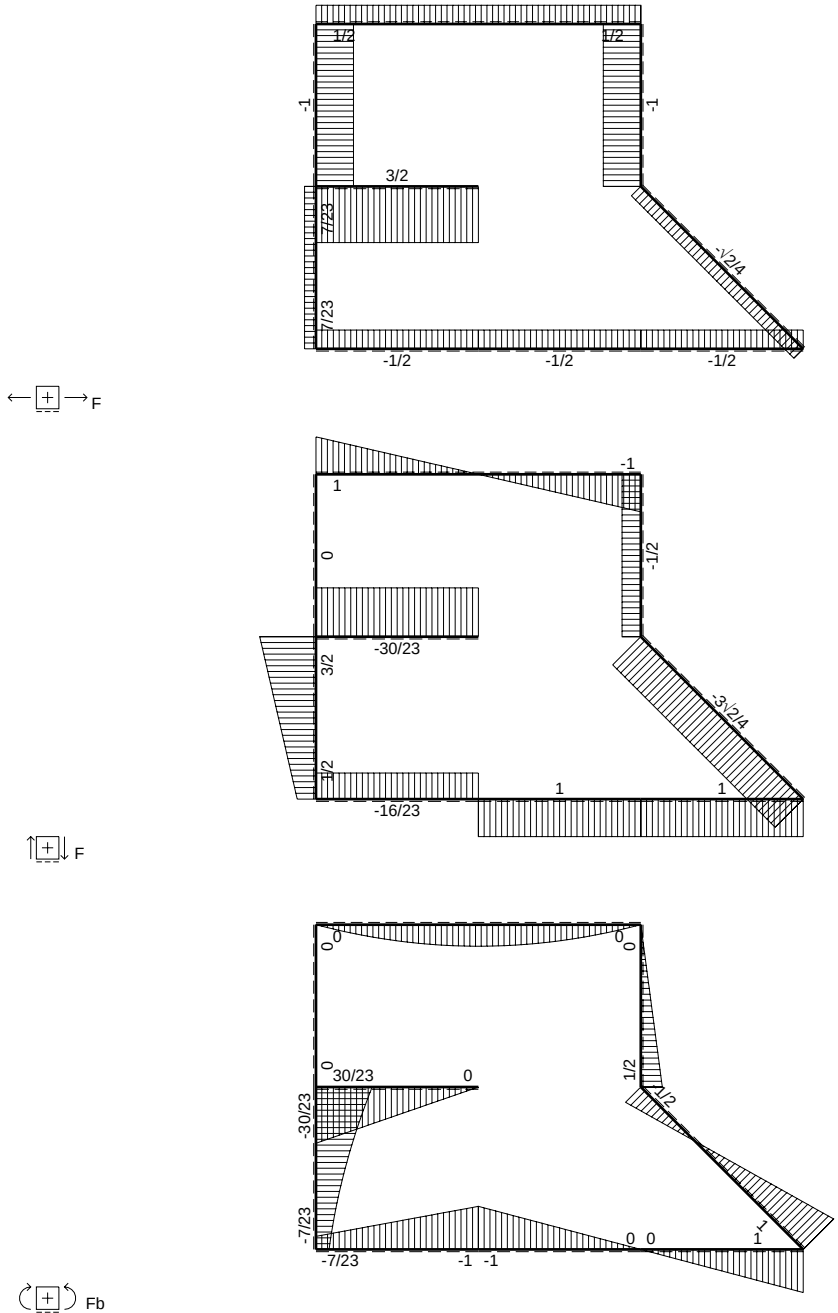
F
1/2
1/2
-1
-1
3/2
7/23
-1/2
7/23
-1/2
-1/2
-1/2
F
-1
1
0
-1/2
-30/23
3/2
-3/2
1/2
1
1
-16/23
F
0
0
0
0
30/23
0
1/2
-30/23
1/2
-7/23
-1
0 0
1
-7/23
-1 -1
Fb

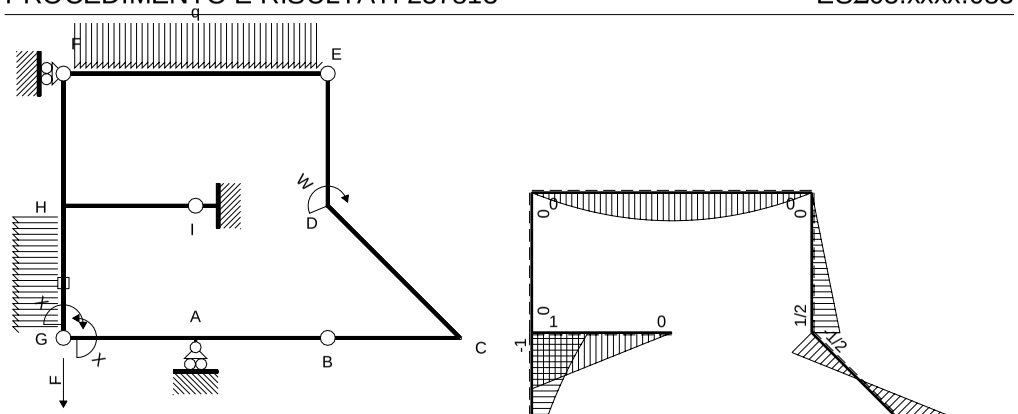

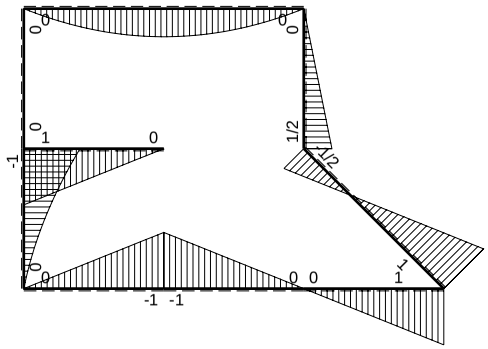

M_0 flessione da carichi assegnati

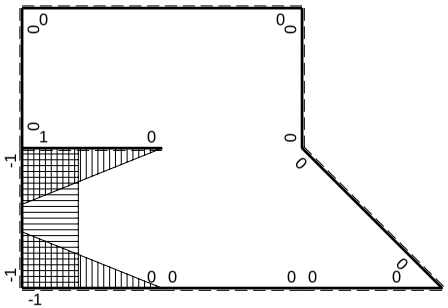

M_x flessione da iperstatica X=1

Quadro contributi PLV per iperstatica $X=W_{GA}$

→	$M_x(x)$	$M_0(x)$	M_xM_0	M_xM_x	$\int M_xM_0/EJdx$	$\int XM_xM_x/EJdx$
AB b	0	-Fb+Fx	0	0	0	0
BA b	0	Fx	0	0		
BC b	0	Fx	0	0	0	0
CB b	0	-Fb+Fx	0	0		
CD √2b	0	Fb-3√2/4Fx	0	0	0	0
DE b	0	1/2Fb-1/2Fx	0	0	0	0
ED b	0	-1/2Fx	0	0		
EF 2b	0	$-Fx+1/2qx^2$	0	0	0	0
FE 2b	0	$Fx-1/2qx^2$	0	0		
GA b	-1+x/b	-Fx	$Fx-Fx^2/b$	$1-2x/b+x^2/b^2$	$1/6Fb^2/EJ$	1/3Xb/EJ
AG b	x/b	Fb-Fx	$Fx-Fx^2/b$	x^2/b^2		
FH b	0	0	0	0	0	0
HF b	0	0	0	0		
HI b	1-x/b	Fb-Fx	$Fb-2Fx+Fx^2/b$	$1-2x/b+x^2/b^2$	$1/3Fb^2/EJ$	1/3Xb/EJ
IH b	-x/b	-Fx	Fx^2/b	x^2/b^2		
HG b	-1	$-Fb+3/2Fx-1/2qx^2$	$Fb-3/2Fx+1/2Fx^2/b$	1	$5/12Fb^2/EJ$	Xb/EJ
GH b	1	$1/2Fx+1/2qx^2$	$1/2Fx+1/2Fx^2/b$	1		
HG	elongazione asta $N_{1HG}\varepsilon_{HG}L_{HG}$				$-Fb^2/EJ$	
A	molla nodo $-V_{1A}(V_{0A}+XV_{1A})/k_A$				$-1/2Fb^2/EJ$	1/4Xb/EJ
	totali				$-7/12Fb^2/EJ$	23/12Xb/EJ
	iperstatica $X=W_{GA}$				7/23Fb	

Sviluppi di calcolo iperstatica

$L^{XX}_{GA} = \int_o^b (1 - 2\,x/b + x^2/b^2)\ 1/EJ\ dx = [\ x - x^2/b + 1/3\ x^3/b^2\ ]_o^b\ 1/EJ$

$= (\ b - b + 1/3\ b\ )\ 1/EJ\ = 1/3\ b/EJ$

$L^{XX}_{AG} = \int_o^b (\ x^2/b^2\ )\ 1/EJ\ dx = [1/3\ x^3/b^2\ ]_o^b\ 1/EJ$

$= (1/3\ b\ )\ 1/EJ\ = 1/3\ b/EJ$

$L^{XX}_{HI} = \int_o^b (1 - 2\,x/b + x^2/b^2)\ 1/EJ\ dx = [\ x - x^2/b + 1/3\ x^3/b^2\ ]_o^b\ 1/EJ$

$= (\ b - b + 1/3\ b\ )\ 1/EJ\ = 1/3\ b/EJ$

$L^{XX}_{IH} = \int_o^b (\ x^2/b^2\ )\ 1/EJ\ dx = [1/3\ x^3/b^2\ ]_o^b\ 1/EJ$

$= (1/3\ b\ )\ 1/EJ\ = 1/3\ b/EJ$

$L^{XX}_{HG} = \int_o^b (1)\ 1/EJ\ dx = [\ x\ ]_o^b\ 1/EJ$

$= (\ b\ )\ 1/EJ\ =\ b/EJ$

$L^{XX}_{GH} = \int_o^b (1)\ 1/EJ\ dx = [\ x\ ]_o^b\ 1/EJ$

$= (\ b\ )\ 1/EJ\ =\ b/EJ$

$L^{Xo}_{GA} = \int_o^b (\ x/b - x^2/b^2\ )\ Fb\ 1/EJ\ dx = [1/2\ x^2/b - 1/3\ x^3/b^2\ ]_o^b\ Fb\ 1/EJ$

$= (1/2\ b - 1/3\ b\ )\ Fb\ 1/EJ\ = 1/6\ \ Fb^2/EJ$

$L^{Xo}_{AG} = \int_o^b (\ x/b - x^2/b^2\ )\ Fb\ 1/EJ\ dx = [1/2\ x^2/b - 1/3\ x^3/b^2\ ]_o^b\ Fb\ 1/EJ$

$= (1/2\ b - 1/3\ b\ )\ Fb\ 1/EJ\ = 1/6\ \ Fb^2/EJ$

$L^{Xo}_{HI} = \int_o^b (1 - 2\,x/b + x^2/b^2)\ Fb\ 1/EJ\ dx = [\ x - x^2/b + 1/3\ x^3/b^2\ ]_o^b\ Fb\ 1/EJ$

$= (\ b - b + 1/3\ b\ )\ Fb\ 1/EJ\ = 1/3\ \ Fb^2/EJ$

$L^{Xo}_{IH} = \int_o^b (\ x^2/b^2\ )\ Fb\ 1/EJ\ dx = [1/3\ x^3/b^2\ ]_o^b\ Fb\ 1/EJ$

$= (1/3\ b\ )\ Fb\ 1/EJ\ = 1/3\ \ Fb^2/EJ$

$L^{Xo}_{HG} = \int_o^b (1 - 3/2\ x/b + 1/2\ x^2/b^2)\ Fb\ 1/EJ\ dx - 1\ \ (-1)\ \ (-1)\ \ Fb^2/EJ$

$= [\ x - 3/4\ x^2/b + 1/6\ x^3/b^2\ ]_o^b\ Fb\ 1/EJ\ - 1\ \ (-1)\ \ (-1)\ \ Fb^2/EJ$

$= (\ b - 3/4\ b + 1/6\ b\ )\ Fb\ 1/EJ\ - 1\ \ (-1)\ \ (-1)\ \ Fb^2/EJ = -7/12\ \ Fb^2/EJ$

$L^{Xo}_{GH} = \int_o^b (1/2\ x/b + 1/2\ x^2/b^2)\ Fb\ 1/EJ\ dx - 1\ \ (-1)\ \ (-1)\ \ Fb^2/EJ$

$= [1/4\ x^2/b + 1/6\ x^3/b^2\ ]_o^b\ Fb\ 1/EJ\ - 1\ \ (-1)\ \ (-1)\ \ Fb^2/EJ$

$= (1/4\ b + 1/6\ b\ )\ Fb\ 1/EJ\ - 1\ \ (-1)\ \ (-1)\ \ Fb^2/EJ = -7/12\ \ Fb^2/EJ$

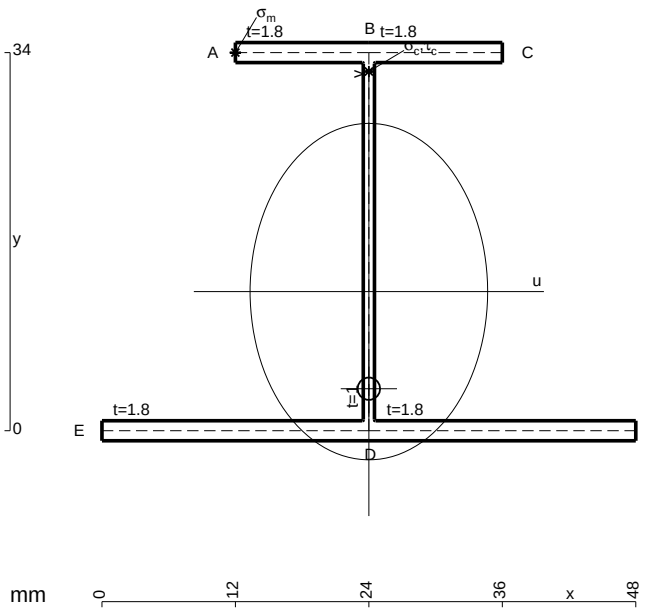

A = 163.6 mm^2
J_u = 37433. mm^4
J_v = 18662. mm^4
J_t = 151.3 mm^4
y_o = -8.733 mm
y_g = 12.51 mm
N = -282.8 N
T_y = -848.5 N
M_x = 344000. Nmm
x_m = 12. mm
y_m = 34. mm
u_m = -12. mm
v_m = 21.49 mm
$\sigma_m = N/A - Mv/J_u$ = -199.2 N/mm^2
x_c = 24. mm
y_c = 34. mm
v_c = 21.49 mm
$\sigma_c = N/A - Mv/J_u$ = -199.2 N/mm^2
$\tau_c = TS^*/tJ_u$ = 21.04 N/mm^2
$\tau_g = TS^*/tJ_u$ = 21.04 N/mm^2
t_c = 800. mm
$\sigma_o = \sqrt{\sigma^2 + 3\tau^2}$ = 202.5 N/mm^2

ESΣ05.xxxx.085

@ Adolfo Zavelani Rossi, Politecnico di Milano, vers.27.03.13 01.12.25

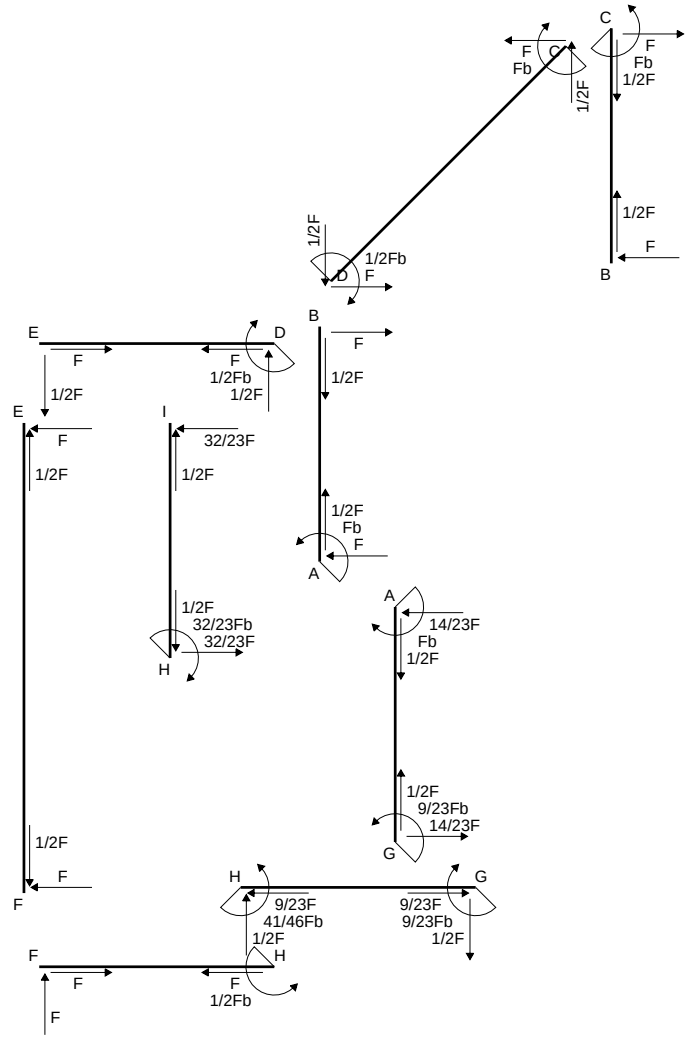
C
F
Fb
1/2F
F
Fb
1/2F
1/2F
F
B
1/2F
1/2Fb
F
D
E
F
F
1/2Fb
1/2F
B
F
1/2F
E
F
1/2F
I
32/23F
1/2F
1/2F
Fb
F
A
1/2F
32/23Fb
32/23F
H
A
14/23F
Fb
1/2F
1/2F
9/23Fb
14/23F
G
1/2F
F
F
H
9/23F
41/46Fb
1/2F
H
9/23F
9/23Fb
1/2F
G
F
F
F
1/2Fb
F

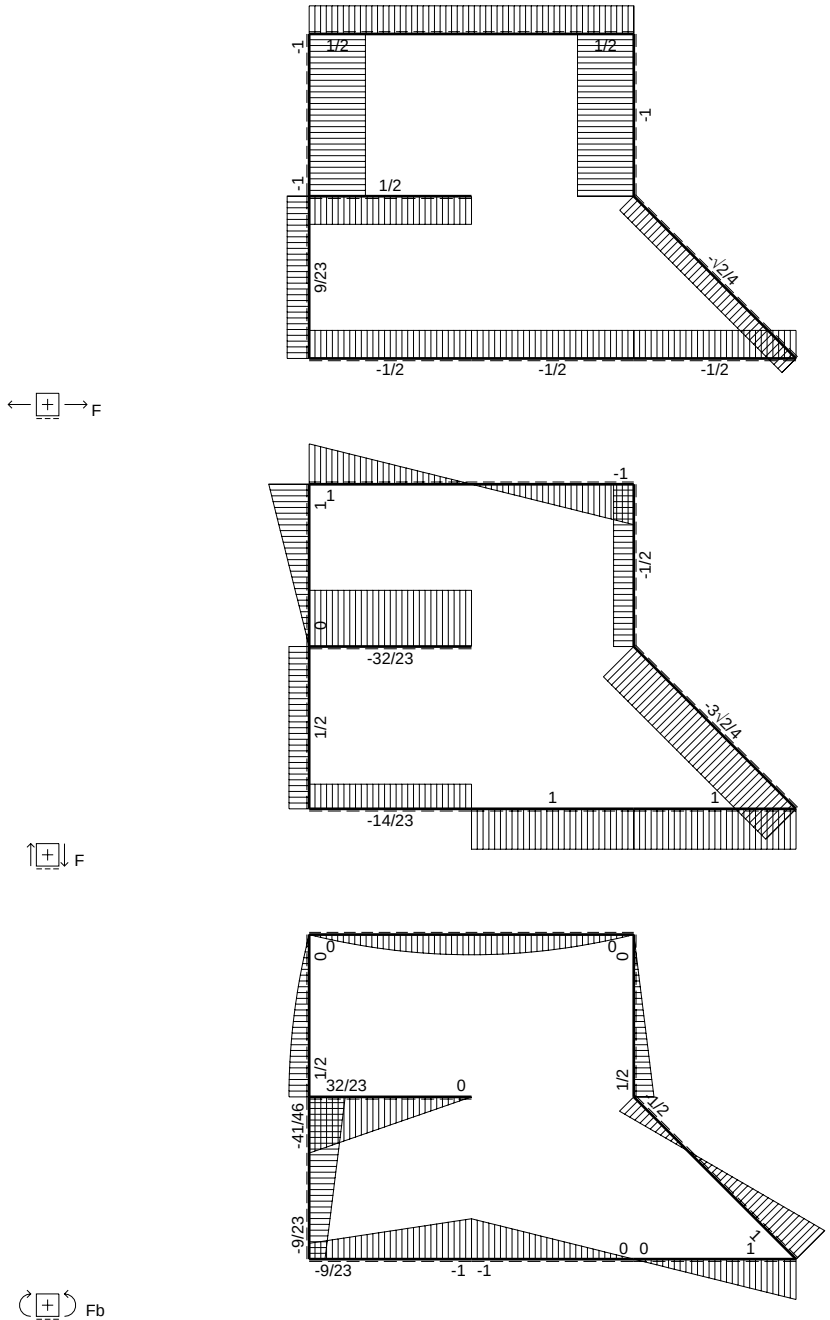
F
-1
1/2
1/2
-1
-1
1/2
9/23
-1/2
-1/2
-1/2
-1/2
F
-1
1
1
-1/2
0
-32/23
1/2
-3/2
1
1
-14/23
Fb
0
0
0
0
1/2
32/23
0
1/2
1/2
-41/46
-9/23
0 0
1
1
-9/23
-1 -1

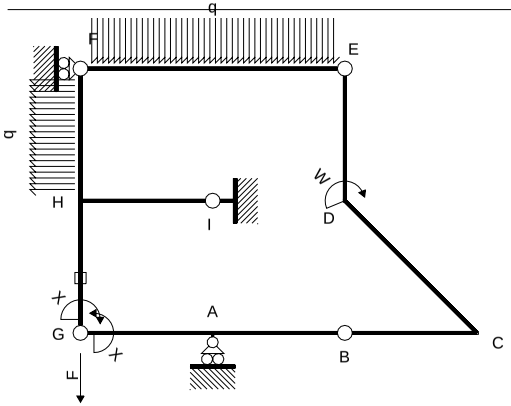

Schema di calcolo iperstatico

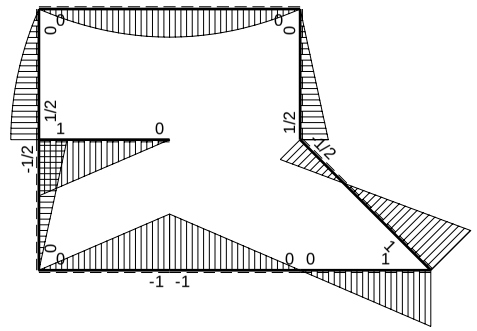

M_0 flessione da carichi assegnati

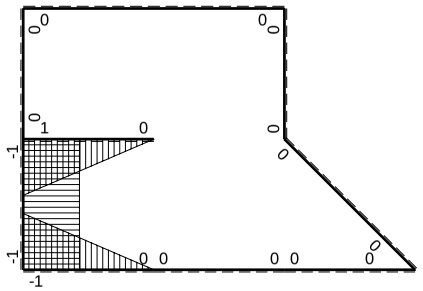

M_x flessione da iperstatica X=1

Quadro contributi PLV per iperstatica $X=W_{GA}$

→	$M_x(x)$	$M_o(x)$	M_xM_o	M_xM_x	$\int M_xM_o/EJdx$	$\int XM_xM_x/EJdx$
AB b	0	-Fb+Fx	0	0	0	0
BA b	0	Fx	0	0		
BC b	0	Fx	0	0	0	0
CB b	0	-Fb+Fx	0	0		
CD √2b	0	Fb-3√2/4Fx	0	0	0	0
DE b	0	1/2Fb-1/2Fx	0	0	0	0
ED b	0	-1/2Fx	0	0		
EF 2b	0	$-Fx+1/2qx^2$	0	0	0	0
FE 2b	0	$Fx-1/2qx^2$	0	0		
GA b	-1+x/b	-Fx	$Fx-Fx^2/b$	$1-2x/b+x^2/b^2$	$1/6Fb^2/EJ$	1/3Xb/EJ
AG b	x/b	Fb-Fx	$Fx-Fx^2/b$	x^2/b^2		
FH b	0	$Fx-1/2qx^2$	0	0	0	0
HF b	0	$-1/2Fb+1/2qx^2$	0	0		
HI b	1-x/b	Fb-Fx	$Fb-2Fx+Fx^2/b$	$1-2x/b+x^2/b^2$	$1/3Fb^2/EJ$	1/3Xb/EJ
IH b	-x/b	-Fx	Fx^2/b	x^2/b^2		
HG b	-1	-1/2Fb+1/2Fx	1/2Fb-1/2Fx	1	$1/4Fb^2/EJ$	Xb/EJ
GH b	1	1/2Fx	1/2Fx	1		
HG	elongazione asta $N_{1HG}\varepsilon_{HG}L_{HG}$				$-Fb^2/EJ$	
A	molla nodo $-V_{1A}(V_{0A}+XV_{1A})/k_A$				$-1/2Fb^2/EJ$	1/4Xb/EJ
	totali				$-3/4Fb^2/EJ$	23/12Xb/EJ
	iperstatica $X=W_{GA}$				9/23Fb	

Sviluppi di calcolo iperstatica

$L^{XX}_{GA} = \int_o^b (1 - 2\,x/b + x^2/b^2)\ 1/EJ\ dx = [\,x - x^2/b + 1/3\,x^3/b^2\,]_o^b\ 1/EJ$

$= (\,b - b + 1/3\,b\,)\ 1/EJ\ = 1/3\ b/EJ$

$L^{XX}_{AG} = \int_o^b (\,x^2/b^2\,)\ 1/EJ\ dx = [1/3\,x^3/b^2\,]_o^b\ 1/EJ$

$= (1/3\,b\,)\ 1/EJ\ = 1/3\ b/EJ$

$L^{XX}_{HI} = \int_o^b (1 - 2\,x/b + x^2/b^2)\ 1/EJ\ dx = [\,x - x^2/b + 1/3\,x^3/b^2\,]_o^b\ 1/EJ$

$= (\,b - b + 1/3\,b\,)\ 1/EJ\ = 1/3\ b/EJ$

$L^{XX}_{IH} = \int_o^b (\,x^2/b^2\,)\ 1/EJ\ dx = [1/3\,x^3/b^2\,]_o^b\ 1/EJ$

$= (1/3\,b\,)\ 1/EJ\ = 1/3\ b/EJ$

$L^{XX}_{HG} = \int_o^b (1)\ 1/EJ\ dx = [\,x\,]_o^b\ 1/EJ$

$= (\,b\,)\ 1/EJ\ = b/EJ$

$L^{XX}_{GH} = \int_o^b (1)\ 1/EJ\ dx = [\,x\,]_o^b\ 1/EJ$

$= (\,b\,)\ 1/EJ\ = b/EJ$

$L^{Xo}_{GA} = \int_o^b (\,x/b - x^2/b^2\,)\ Fb\ 1/EJ\ dx = [1/2\,x^2/b - 1/3\,x^3/b^2\,]_o^b\ Fb\ 1/EJ$

$= (1/2\,b - 1/3\,b\,)\ Fb\ 1/EJ\ = 1/6\ Fb^2/EJ$

$L^{Xo}_{AG} = \int_o^b (\,x/b - x^2/b^2\,)\ Fb\ 1/EJ\ dx = [1/2\,x^2/b - 1/3\,x^3/b^2\,]_o^b\ Fb\ 1/EJ$

$= (1/2\,b - 1/3\,b\,)\ Fb\ 1/EJ\ = 1/6\ Fb^2/EJ$

$L^{Xo}_{HI} = \int_o^b (1 - 2\,x/b + x^2/b^2\,)\ Fb\ 1/EJ\ dx = [\,x - x^2/b + 1/3\,x^3/b^2\,]_o^b\ Fb\ 1/EJ$

$= (\,b - b + 1/3\,b\,)\ Fb\ 1/EJ\ = 1/3\ Fb^2/EJ$

$L^{Xo}_{IH} = \int_o^b (\,x^2/b^2\,)\ Fb\ 1/EJ\ dx = [1/3\,x^3/b^2\,]_o^b\ Fb\ 1/EJ$

$= (1/3\,b\,)\ Fb\ 1/EJ\ = 1/3\ Fb^2/EJ$

$L^{Xo}_{HG} = \int_o^b (1/2 - 1/2\,x/b\,)\ Fb\ 1/EJ\ dx - 1\ \ (-1)\ \ (-1)\ \ Fb^2/EJ$

$= [1/2\,x - 1/4\,x^2/b\,]_o^b\ Fb\ 1/EJ\ - 1\ \ (-1)\ \ (-1)\ \ Fb^2/EJ$

$= (1/2\,b - 1/4\,b\,)\ Fb\ 1/EJ\ - 1\ \ (-1)\ \ (-1)\ \ Fb^2/EJ = -3/4\ \ Fb^2/EJ$

$L^{Xo}_{GH} = \int_o^b (1/2\,x/b\,)\ Fb\ 1/EJ\ dx - 1\ \ (-1)\ \ (-1)\ \ Fb^2/EJ = [1/4\,x^2/b\,]_o^b\ Fb\ 1/EJ\ - 1\ \ (-1)\ \ (-1)\ \ Fb^2/EJ$

$= (1/4\,b\,)\ Fb\ 1/EJ\ - 1\ \ (-1)\ \ (-1)\ \ Fb^2/EJ = -3/4\ \ Fb^2/EJ$

PROCEDIMENTO E RISULTATI 237504 ESΣ05.xxxx.086

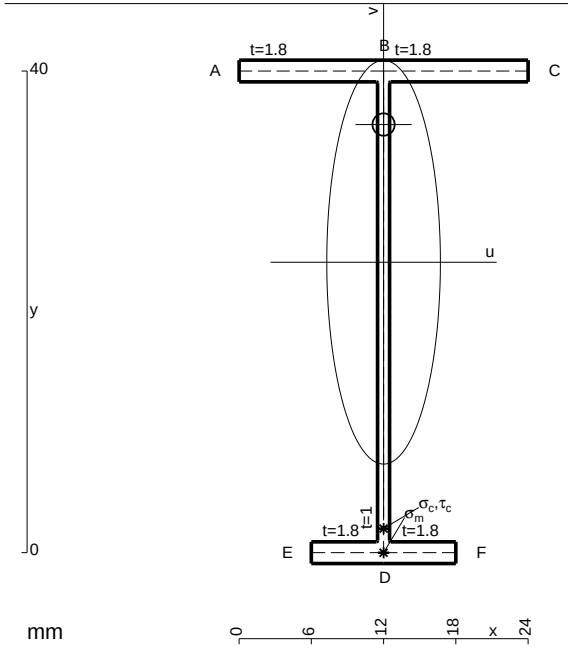

A = 104.8 mm^2
J_u = 29473. mm^4
J_v = 2333. mm^4
J_t = 83.32 mm^4
y_o = 11.43 mm
y_g = 24.12 mm
N = -166.2 N
T_y = -498.5 N
M_x = 253800. Nmm
x_m = 12. mm
v_m = -24.12 mm
$\sigma_m = N/A - Mv/J_u$ = 206.1 N/mm^2
y_c = 3. mm
u_c = -12. mm
v_c = -21.12 mm
$\sigma_c = N/A - Mv/J_u$ = 206.1 N/mm^2
$\tau_c = TS^*/tJ_u$ = 8.813 N/mm^2
$\tau_g = TS^*/tJ_u$ = 8.813 N/mm^2
t_c = 470. mm
$\sigma_o = \sqrt{\sigma^2 + 3\tau^2}$ = 206.7 N/mm^2

@ Adolfo Zavelani Rossi, Politecnico di Milano, vers.27.03.13 01.12.25

ESΣ05.xxxx.086

@ Adolfo Zavelani Rossi, Politecnico di Milano, vers.27.03.13 01.12.25

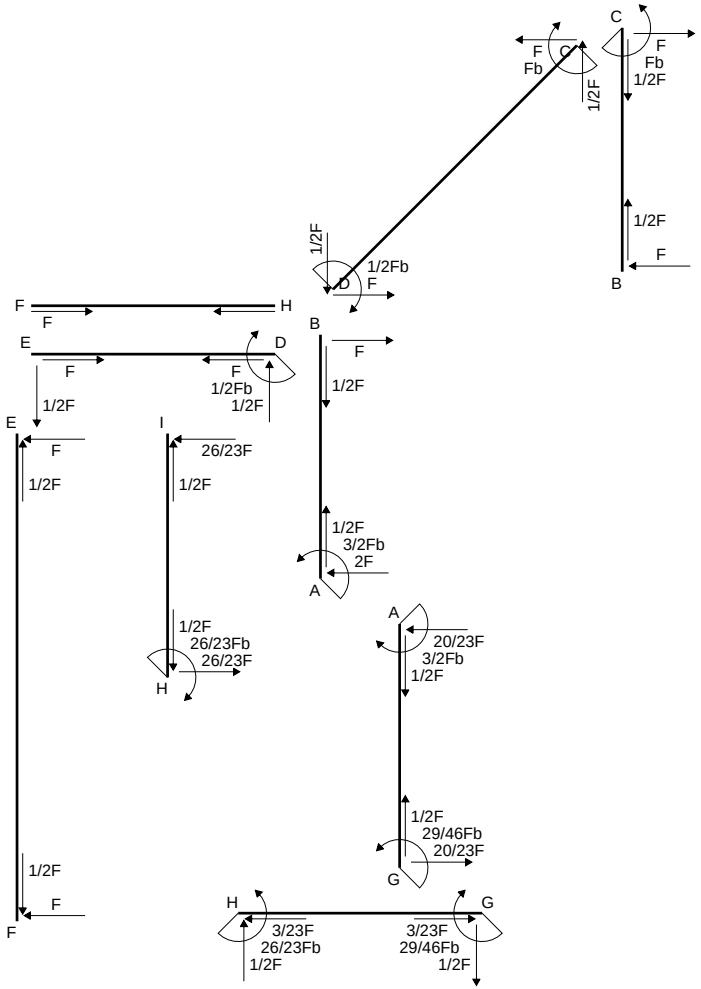
C
F
Fb
1/2F
1/2F
B
1/2F
1/2Fb
D
F
F
H
E
D
F
F
1/2Fb
1/2F
1/2F
E
I
F
26/23F
1/2F
1/2F
1/2F
3/2Fb
2F
A
1/2F
26/23Fb
26/23F
H
A
20/23F
3/2Fb
1/2F
1/2F
29/46Fb
20/23F
G
1/2F
F
F
H
G
3/23F
26/23Fb
1/2F
3/23F
29/46Fb
1/2F

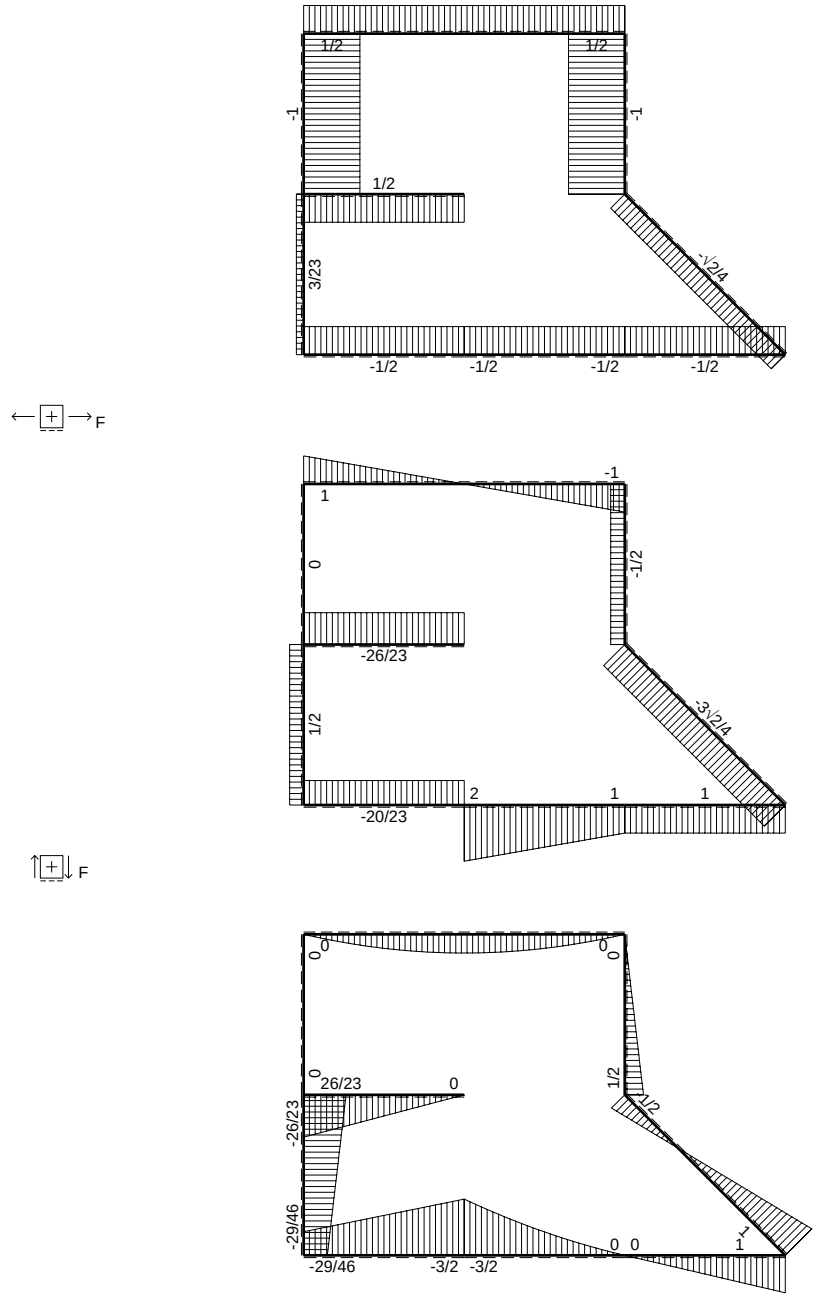
1/2
1/2
-1
-1
1/2
3/23
-√2/4
-1/2
-1/2
-1/2
-1/2
F
-1
1
0
-1/2
-26/23
1/2
-3√2/4
2
1
1
-20/23
F
0
0
0
0
26/23
0
1/2
-1/2
-26/23
-29/46
0
0
1
-29/46
-3/2
-3/2
Fb

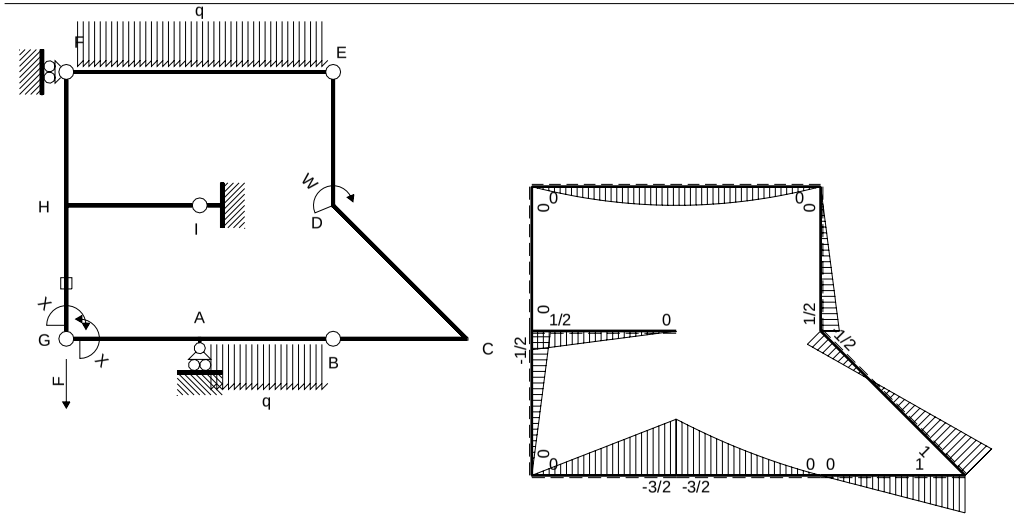

M_0 flessione da carichi assegnati

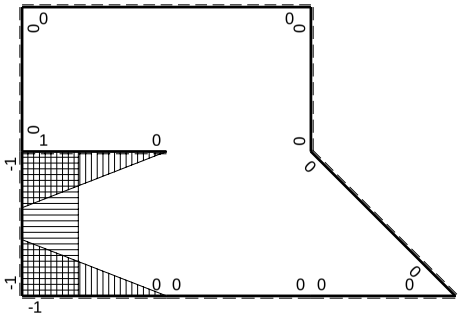

M_x flessione da iperstatica X=1

Quadro contributi PLV per iperstatica $X=W_{GA}$

→	$M_x(x)$	$M_0(x)$	M_xM_0	M_xM_x	$\int M_xM_0/EJdx$	$\int XM_xM_x/EJdx$
AB b	0	$-3/2Fb+2Fx-1/2qx^2$	0	0	0	0
BA b	0	$Fx+1/2qx^2$	0	0		
BC b	0	Fx	0	0	0	0
CB b	0	-Fb+Fx	0	0		
CD $\sqrt{2}b$	0	$Fb-3\sqrt{2}/4Fx$	0	0	0	0
DE b	0	1/2Fb-1/2Fx	0	0	0	0
ED b	0	-1/2Fx	0	0		
EF 2b	0	$-Fx+1/2qx^2$	0	0	0	0
FE 2b	0	$Fx-1/2qx^2$	0	0		
GA b	-1+x/b	-3/2Fx	$3/2Fx-3/2Fx^2/b$	$1-2x/b+x^2/b^2$	$1/4Fb^2/EJ$	1/3Xb/EJ
AG b	x/b	3/2Fb-3/2Fx	$3/2Fx-3/2Fx^2/b$	x^2/b^2		
FH b	0	0	0	0	0	0
HF b	0	0	0	0		
HI b	1-x/b	1/2Fb-1/2Fx	$1/2Fb-Fx+1/2Fx^2/b$	$1-2x/b+x^2/b^2$	$1/6Fb^2/EJ$	1/3Xb/EJ
IH b	-x/b	-1/2Fx	$1/2Fx^2/b$	x^2/b^2		
HG b	-1	-1/2Fb+1/2Fx	1/2Fb-1/2Fx	1	$1/4Fb^2/EJ$	Xb/EJ
GH b	1	1/2Fx	1/2Fx	1		
HG	elongazione asta $N_{1HG}\varepsilon_{HG}L_{HG}$				$-Fb^2/EJ$	
A	molla nodo $-V_{1A}(V_{0A}+XV_{1A})/k_A$				$-7/8Fb^2/EJ$	1/4Xb/EJ
	totali				$-29/24Fb^2/EJ$	23/12Xb/EJ
	iperstatica $X=W_{GA}$				29/46Fb	

Sviluppi di calcolo iperstatica

$L^{XX}_{GA} = \int_o^b (1 - 2\,x/b + x^2/b^2)\ 1/EJ\ dx = [\,x - x^2/b + 1/3\,x^3/b^2\,]_o^b\ 1/EJ$

$= (\,b - b + 1/3\,b\,)\ 1/EJ = 1/3\ b/EJ$

$L^{XX}_{AG} = \int_o^b (\,x^2/b^2\,)\ 1/EJ\ dx = [1/3\,x^3/b^2\,]_o^b\ 1/EJ$

$= (1/3\,b\,)\ 1/EJ = 1/3\ b/EJ$

$L^{XX}_{HI} = \int_o^b (1 - 2\,x/b + x^2/b^2)\ 1/EJ\ dx = [\,x - x^2/b + 1/3\,x^3/b^2\,]_o^b\ 1/EJ$

$= (\,b - b + 1/3\,b\,)\ 1/EJ = 1/3\ b/EJ$

$L^{XX}_{IH} = \int_o^b (\,x^2/b^2\,)\ 1/EJ\ dx = [1/3\,x^3/b^2\,]_o^b\ 1/EJ$

$= (1/3\,b\,)\ 1/EJ = 1/3\ b/EJ$

$L^{XX}_{HG} = \int_o^b (1)\ 1/EJ\ dx = [\,x\,]_o^b\ 1/EJ$

$= (\,b\,)\ 1/EJ = b/EJ$

$L^{XX}_{GH} = \int_o^b (1)\ 1/EJ\ dx = [\,x\,]_o^b\ 1/EJ$

$= (\,b\,)\ 1/EJ = b/EJ$

$L^{Xo}_{GA} = \int_o^b (3/2\,x/b - 3/2\,x^2/b^2)\ Fb\ 1/EJ\ dx = [3/4\,x^2/b - 1/2\,x^3/b^2\,]_o^b\ Fb\ 1/EJ$

$= (3/4\,b - 1/2\,b\,)\ Fb\ 1/EJ = 1/4\ Fb^2/EJ$

$L^{Xo}_{AG} = \int_o^b (3/2\,x/b - 3/2\,x^2/b^2\,)\ Fb\ 1/EJ\ dx = [3/4\,x^2/b - 1/2\,x^3/b^2\,]_o^b\ Fb\ 1/EJ$

$= (3/4\,b - 1/2\,b\,)\ Fb\ 1/EJ = 1/4\ Fb^2/EJ$

$L^{Xo}_{HI} = \int_o^b (1/2 - x/b + 1/2\,x^2/b^2\,)\ Fb\ 1/EJ\ dx = [1/2\,x - 1/2\,x^2/b + 1/6\,x^3/b^2\,]_o^b\ Fb\ 1/EJ$

$= (1/2\,b - 1/2\,b + 1/6\,b\,)\ Fb\ 1/EJ = 1/6\ Fb^2/EJ$

$L^{Xo}_{IH} = \int_o^b (1/2\,x^2/b^2\,)\ Fb\ 1/EJ\ dx = [1/6\,x^3/b^2\,]_o^b\ Fb\ 1/EJ$

$= (1/6\,b\,)\ Fb\ 1/EJ = 1/6\ Fb^2/EJ$

$L^{Xo}_{HG} = \int_o^b (1/2 - 1/2\,x/b\,)\ Fb\ 1/EJ\ dx - 1\ \ (-1)\ \ (-1)\ \ Fb^2/EJ$

$= [1/2\,x - 1/4\,x^2/b\,]_o^b\ Fb\ 1/EJ\ - 1\ \ (-1)\ \ (-1)\ \ Fb^2/EJ$

$= (1/2\,b - 1/4\,b\,)\ Fb\ 1/EJ\ - 1\ \ (-1)\ \ (-1)\ \ Fb^2/EJ = -3/4\ \ Fb^2/EJ$

$L^{Xo}_{GH} = \int_o^b (1/2\,x/b\,)\ Fb\ 1/EJ\ dx - 1\ \ (-1)\ \ (-1)\ \ Fb^2/EJ = [1/4\,x^2/b\,]_o^b\ Fb\ 1/EJ\ - 1\ \ (-1)\ \ (-1)\ \ Fb^2/EJ$

$= (1/4\,b\,)\ Fb\ 1/EJ\ - 1\ \ (-1)\ \ (-1)\ \ Fb^2/EJ = -3/4\ \ Fb^2/EJ$

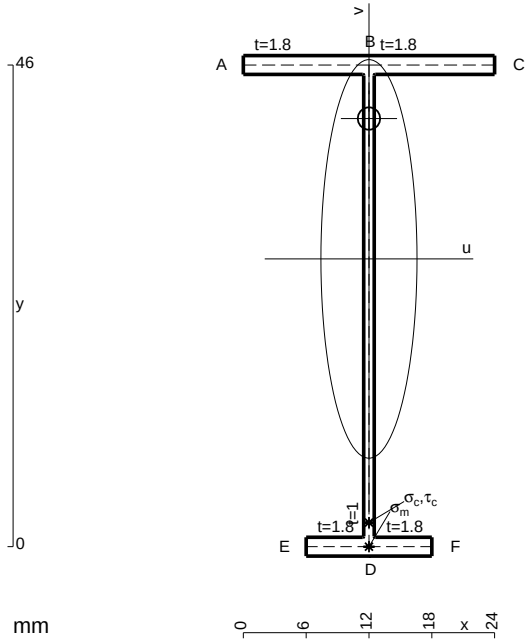

A = 110.8 mm^2
J_u = 40163. mm^4
J_v = 2333. mm^4
J_t = 85.32 mm^4
y_o = 13.41 mm
y_g = 27.48 mm
N = -160. N
T_y = 640. N
M_x = -316800. Nmm
x_m = 12. mm
v_m = -27.48 mm
$\sigma_m = N/A - Mv/J_u$ = -218.2 N/mm^2
y_c = 3. mm
u_c = -12. mm
v_c = -24.48 mm
$\sigma_c = N/A - Mv/J_u$ = -218.2 N/mm^2
$\tau_c = TS^*/tJ_u$ = 9.46 N/mm^2
$\tau_g = TS^*/tJ_u$ = 9.46 N/mm^2
t_c = 320. mm
$\sigma_o = \sqrt{\sigma^2 + 3\tau^2}$ = 218.8 N/mm^2

ESΣ05.xxxx.087

@ Adolfo Zavelani Rossi, Politecnico di Milano, vers.27.03.13 01.12.25

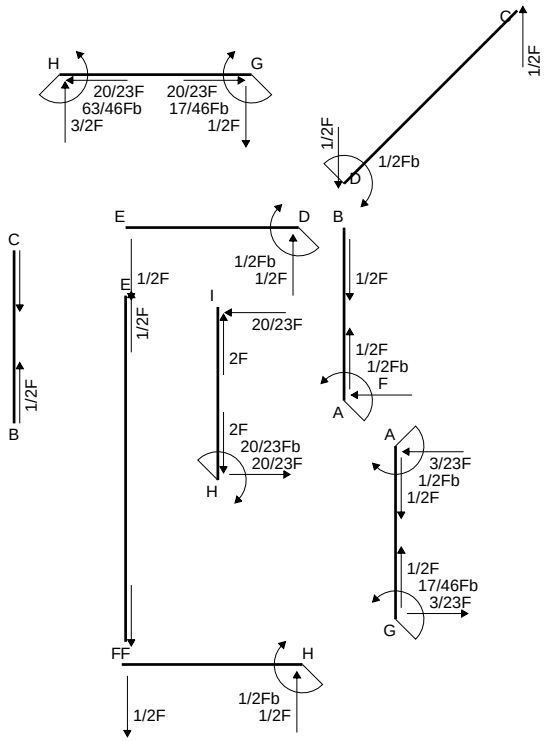
H
G
20/23F
63/46Fb
3/2F
20/23F
17/46Fb
1/2F
C
1/2F
1/2F
D
1/2Fb
E
D
B
1/2Fb
1/2F
1/2F
E
1/2F
I
20/23F
2F
1/2F
1/2Fb
F
A
C
1/2F
B
2F
20/23Fb
20/23F
H
A
3/23F
1/2Fb
1/2F
1/2F
17/46Fb
3/23F
G
FF
H
1/2Fb
1/2F
1/2F

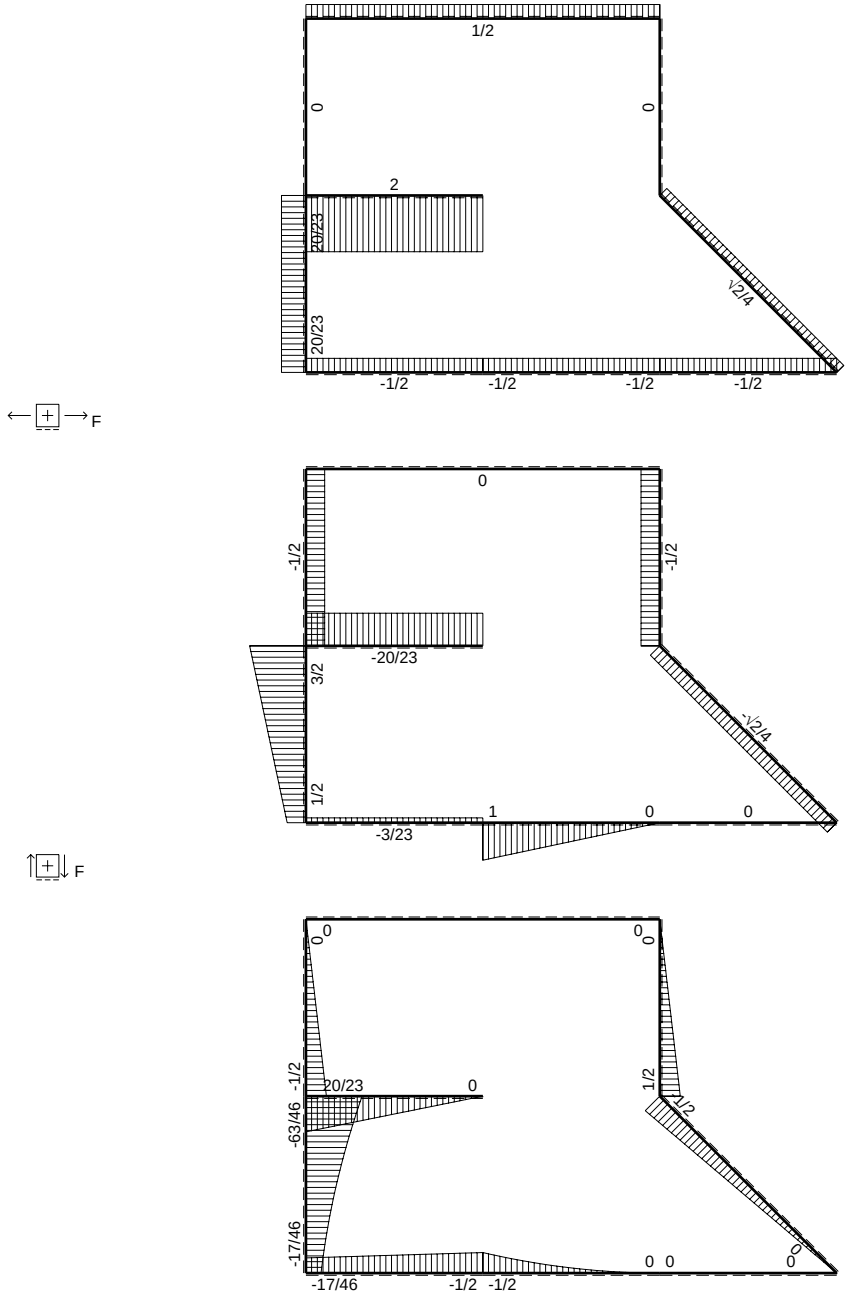
1/2
0
0
2
20/23
√2/4
20/23
-1/2
-1/2
-1/2
-1/2
F
0
-1/2
-1/2
-20/23
3/2
√2/4
1/2
1
0
0
-3/23
F
0
0
0
0
-1/2
20/23
0
1/2
1/2
-63/46
-17/46
0 0
0
-17/46
-1/2 -1/2
Fb

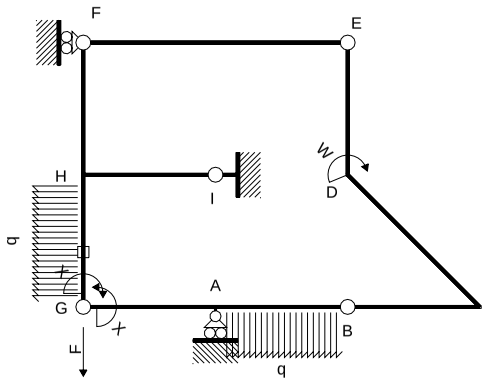

Schema di calcolo iperstatico

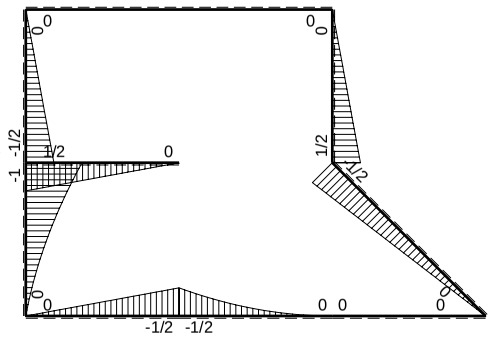

M_0 flessione da carichi assegnati

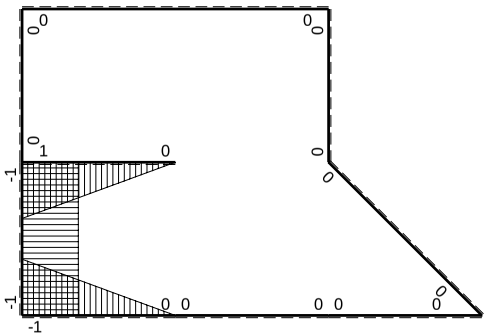

M_x flessione da iperstatica X=1

Quadro contributi PLV per iperstatica $X=W_{GA}$

→	$M_x(x)$	$M_o(x)$	M_xM_o	M_xM_x	$\int M_xM_o/EJdx$	$\int XM_xM_x/EJdx$
AB b	0	$-1/2Fb+Fx-1/2qx^2$	0	0	0	0
BA b	0	$1/2qx^2$	0	0		
BC b	0	0	0	0	0	0
CB b	0	0	0	0		
CD √2b	0	$-\sqrt{2}/4Fx$	0	0	0	0
DE b	0	$1/2Fb-1/2Fx$	0	0	0	0
ED b	0	$-1/2Fx$	0	0		
EF 2b	0	0	0	0	0	0
FE 2b	0	0	0	0		
GA b	$-1+x/b$	$-1/2Fx$	$1/2Fx-1/2Fx^2/b$	$1-2x/b+x^2/b^2$	$1/12Fb^2/EJ$	$1/3Xb/EJ$
AG b	x/b	$1/2Fb-1/2Fx$	$1/2Fx-1/2Fx^2/b$	x^2/b^2		
FH b	0	$-1/2Fx$	0	0	0	0
HF b	0	$1/2Fb-1/2Fx$	0	0		
HI b	$1-x/b$	$1/2Fb-1/2Fx$	$1/2Fb-Fx+1/2Fx^2/b$	$1-2x/b+x^2/b^2$	$1/6Fb^2/EJ$	$1/3Xb/EJ$
IH b	$-x/b$	$-1/2Fx$	$1/2Fx^2/b$	x^2/b^2		
HG b	-1	$-Fb+3/2Fx-1/2qx^2$	$Fb-3/2Fx+1/2Fx^2/b$	1	$5/12Fb^2/EJ$	Xb/EJ
GH b	1	$1/2Fx+1/2qx^2$	$1/2Fx+1/2Fx^2/b$	1		
HG	elongazione asta $N_{1HG}\varepsilon_{HG}L_{HG}$				$-Fb^2/EJ$	
A	molla nodo $-V_{1A}(V_{0A}+XV_{1A})/k_A$				$-3/8Fb^2/EJ$	$1/4Xb/EJ$
	totali				$-17/24Fb^2/EJ$	$23/12Xb/EJ$
	iperstatica $X=W_{GA}$				17/46Fb	

Sviluppi di calcolo iperstatica

$L^{XX}_{GA} = \int_o^b (1 - 2\,x/b + x^2/b^2)\ 1/EJ\ dx = [\,x - x^2/b + 1/3\,x^3/b^2\,]_o^b\ 1/EJ$

$= (\,b - b + 1/3\,b\,)\ 1/EJ = 1/3\ b/EJ$

$L^{XX}_{AG} = \int_o^b (\,x^2/b^2\,)\ 1/EJ\ dx = [1/3\,x^3/b^2\,]_o^b\ 1/EJ$

$= (1/3\,b\,)\ 1/EJ = 1/3\ b/EJ$

$L^{XX}_{HI} = \int_o^b (1 - 2\,x/b + x^2/b^2)\ 1/EJ\ dx = [\,x - x^2/b + 1/3\,x^3/b^2\,]_o^b\ 1/EJ$

$= (\,b - b + 1/3\,b\,)\ 1/EJ = 1/3\ b/EJ$

$L^{XX}_{IH} = \int_o^b (\,x^2/b^2\,)\ 1/EJ\ dx = [1/3\,x^3/b^2\,]_o^b\ 1/EJ$

$= (1/3\,b\,)\ 1/EJ = 1/3\ b/EJ$

$L^{XX}_{HG} = \int_o^b (1)\ 1/EJ\ dx = [\,x\,]_o^b\ 1/EJ$

$= (\,b\,)\ 1/EJ = b/EJ$

$L^{XX}_{GH} = \int_o^b (1)\ 1/EJ\ dx = [\,x\,]_o^b\ 1/EJ$

$= (\,b\,)\ 1/EJ = b/EJ$

$L^{Xo}_{GA} = \int_o^b (1/2\,x/b - 1/2\,x^2/b^2)\ Fb\ 1/EJ\ dx = [1/4\,x^2/b - 1/6\,x^3/b^2\,]_o^b\ Fb\ 1/EJ$

$= (1/4\,b - 1/6\,b\,)\ Fb\ 1/EJ = 1/12\ Fb^2/EJ$

$L^{Xo}_{AG} = \int_o^b (1/2\,x/b - 1/2\,x^2/b^2)\ Fb\ 1/EJ\ dx = [1/4\,x^2/b - 1/6\,x^3/b^2\,]_o^b\ Fb\ 1/EJ$

$= (1/4\,b - 1/6\,b\,)\ Fb\ 1/EJ = 1/12\ Fb^2/EJ$

$L^{Xo}_{HI} = \int_o^b (1/2 - x/b + 1/2\,x^2/b^2)\ Fb\ 1/EJ\ dx = [1/2\,x - 1/2\,x^2/b + 1/6\,x^3/b^2\,]_o^b\ Fb\ 1/EJ$

$= (1/2\,b - 1/2\,b + 1/6\,b\,)\ Fb\ 1/EJ = 1/6\ Fb^2/EJ$

$L^{Xo}_{IH} = \int_o^b (1/2\,x^2/b^2)\ Fb\ 1/EJ\ dx = [1/6\,x^3/b^2\,]_o^b\ Fb\ 1/EJ$

$= (1/6\,b\,)\ Fb\ 1/EJ = 1/6\ Fb^2/EJ$

$L^{Xo}_{HG} = \int_o^b (1 - 3/2\,x/b + 1/2\,x^2/b^2)\ Fb\ 1/EJ\ dx - 1\ \ (-1)\ \ (-1)\ \ Fb^2/EJ$

$= [\,x - 3/4\,x^2/b + 1/6\,x^3/b^2\,]_o^b\ Fb\ 1/EJ\ -\ 1\ \ (-1)\ \ (-1)\ \ Fb^2/EJ$

$= (\,b - 3/4\,b + 1/6\,b\,)\ Fb\ 1/EJ\ -\ 1\ \ (-1)\ \ (-1)\ \ Fb^2/EJ = -7/12\ Fb^2/EJ$

$L^{Xo}_{GH} = \int_o^b (1/2\,x/b + 1/2\,x^2/b^2)\ Fb\ 1/EJ\ dx - 1\ \ (-1)\ \ (-1)\ \ Fb^2/EJ$

$= [1/4\,x^2/b + 1/6\,x^3/b^2\,]_o^b\ Fb\ 1/EJ\ -\ 1\ \ (-1)\ \ (-1)\ \ Fb^2/EJ$

$= (1/4\,b + 1/6\,b\,)\ Fb\ 1/EJ\ -\ 1\ \ (-1)\ \ (-1)\ \ Fb^2/EJ = -7/12\ Fb^2/EJ$

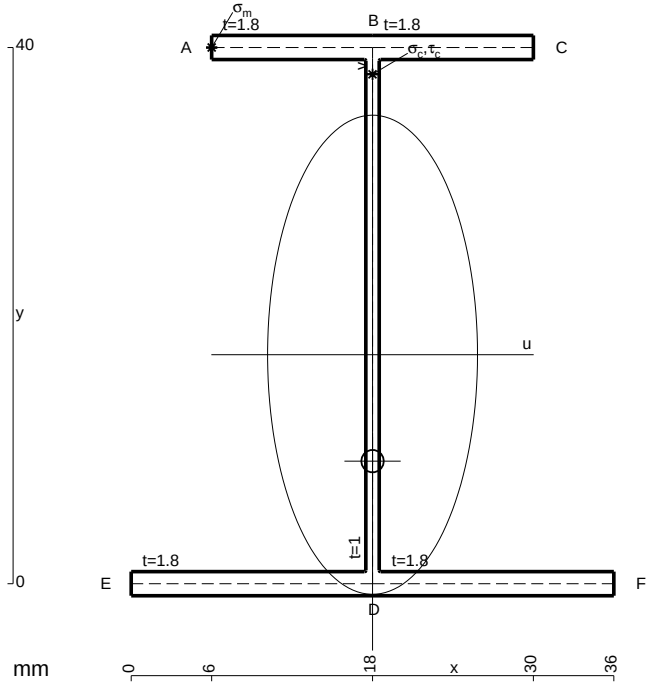

A = 148. mm^2
J_u = 47272. mm^4
J_v = 9072. mm^4
J_t = 130. mm^4
y_o = -7.938 mm
y_g = 17.08 mm
N = -795. N
T_y = 1590. N
M_x = -484950. Nmm
x_m = 6. mm
y_m = 40. mm
u_m = -12. mm
v_m = 22.92 mm
$\sigma_m = N/A - Mv/J_u$ = 229.7 N/mm^2
x_c = 18. mm
y_c = 40. mm
v_c = 22.92 mm
$\sigma_c = N/A - Mv/J_u$ = 229.7 N/mm^2
$\tau_c = TS^*/tJ_u$ = 33.3 N/mm^2
$\tau_g = TS^*/tJ_u$ = 33.3 N/mm^2
t_c = 1590. mm
$\sigma_o = \sqrt{\sigma^2 + 3\tau^2}$ = 236.9 N/mm^2

ESΣ05.xxxx.088

@ Adolfo Zavelani Rossi, Politecnico di Milano, vers.27.03.13 01.12.25

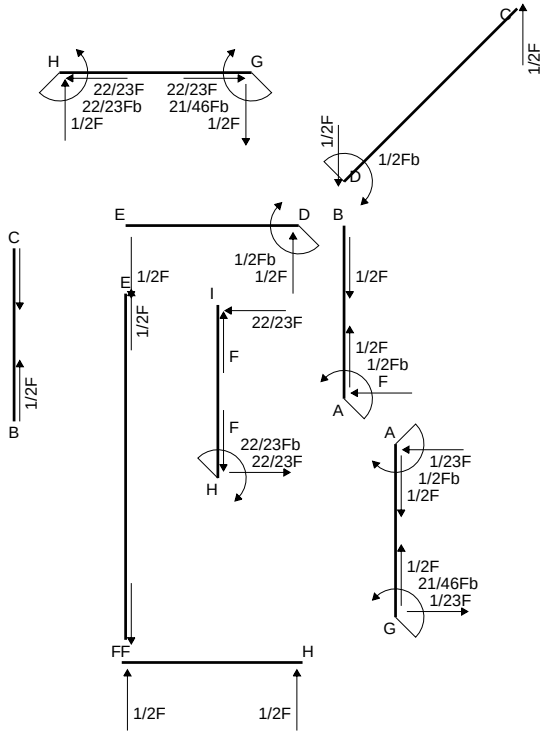
H
G
22/23F
22/23Fb
1/2F
22/23F
21/46Fb
1/2F
C
1/2F
1/2F
1/2Fb
D
E
D
B
1/2Fb
1/2F
1/2F
E
1/2F
I
22/23F
F
1/2F
1/2Fb
F
A
C
1/2F
B
F
22/23Fb
22/23F
H
A
1/23F
1/2Fb
1/2F
1/2F
21/46Fb
1/23F
G
FF
H
1/2F
1/2F

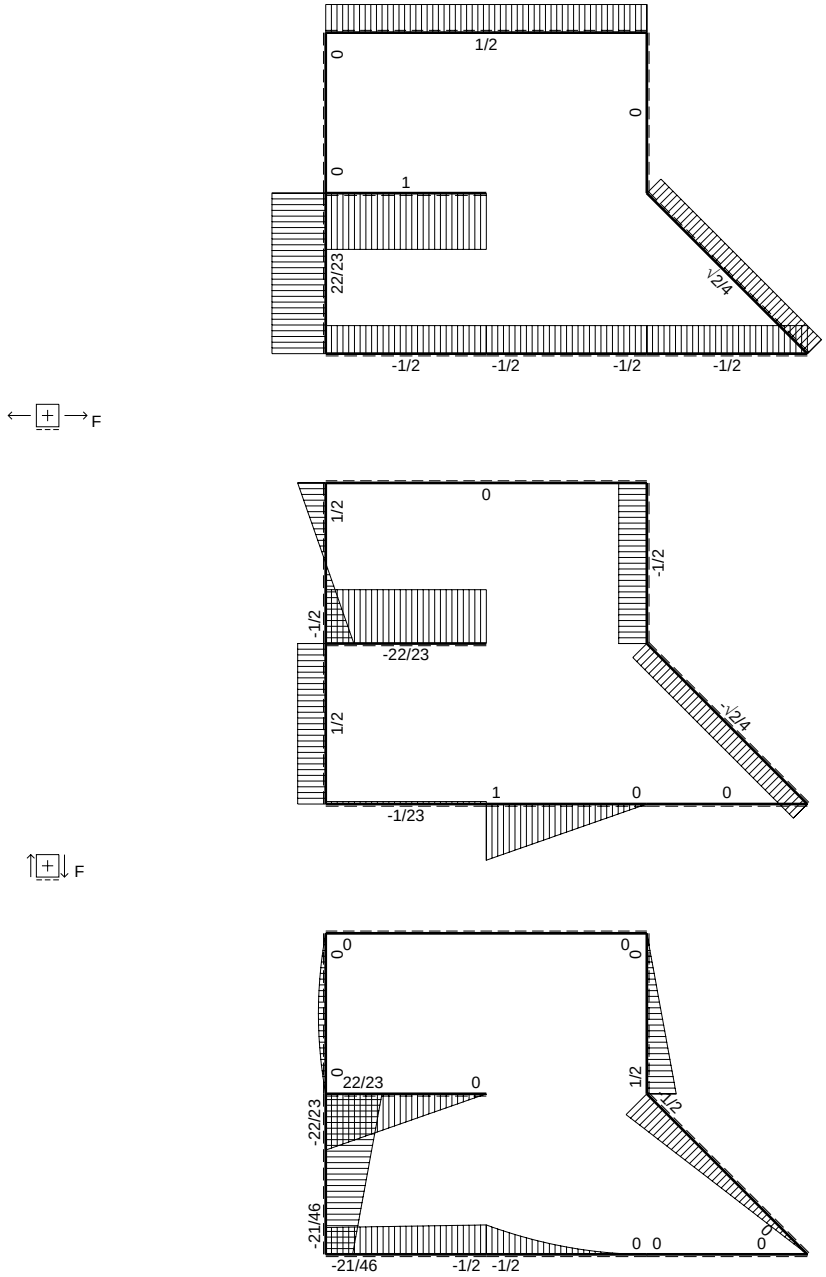
1/2
0
0
0
1
22/23
√2/4
-1/2
-1/2
-1/2
-1/2
F
0
1/2
-1/2
-1/2
-22/23
1/2
-√2/4
1
0
0
-1/23
F
0
0
0
0
22/23
0
1/2
1/2
-22/23
-21/46
0
0
0
-21/46
-1/2
-1/2
Fb

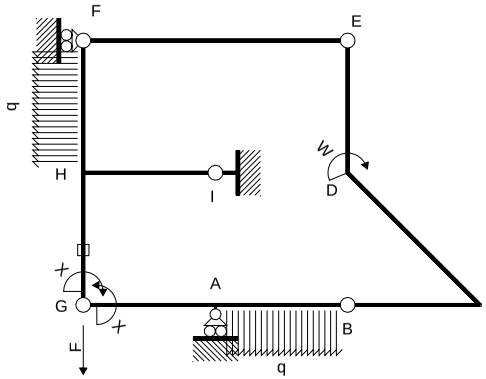

Schema di calcolo iperstatico

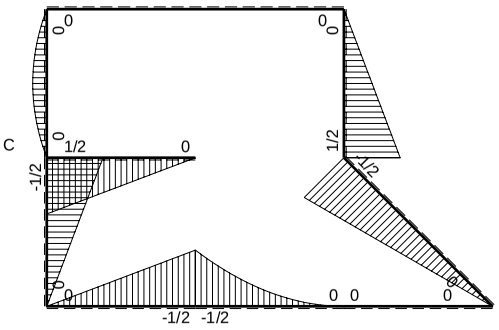

M_0 flessione da carichi assegnati

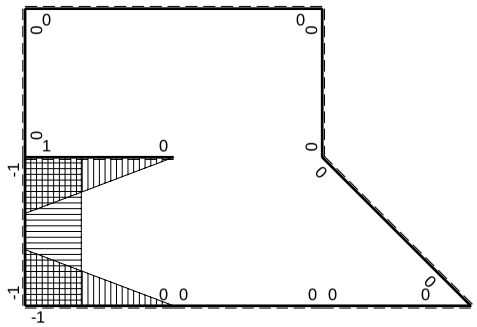

M_x flessione da iperstatica X=1

Quadro contributi PLV per iperstatica $X=W_{GA}$

→	$M_x(x)$	$M_o(x)$	M_xM_o	M_xM_x	$\int M_xM_o/EJdx$	$\int XM_xM_x/EJdx$
AB b	0	$-1/2Fb+Fx-1/2qx^2$	0	0	0	0
BA b	0	$1/2qx^2$	0	0		
BC b	0	0	0	0	0	0
CB b	0	0	0	0		
CD √2b	0	$-\sqrt{2}/4Fx$	0	0	0	0
DE b	0	$1/2Fb-1/2Fx$	0	0	0	0
ED b	0	$-1/2Fx$	0	0		
EF 2b	0	0	0	0	0	0
FE 2b	0	0	0	0		
GA b	$-1+x/b$	$-1/2Fx$	$1/2Fx-1/2Fx^2/b$	$1-2x/b+x^2/b^2$	$1/12Fb^2/EJ$	$1/3Xb/EJ$
AG b	x/b	$1/2Fb-1/2Fx$	$1/2Fx-1/2Fx^2/b$	x^2/b^2		
FH b	0	$1/2Fx-1/2qx^2$	0	0	0	0
HF b	0	$-1/2Fx+1/2qx^2$	0	0		
HI b	$1-x/b$	$1/2Fb-1/2Fx$	$1/2Fb-Fx+1/2Fx^2/b$	$1-2x/b+x^2/b^2$	$1/6Fb^2/EJ$	$1/3Xb/EJ$
IH b	$-x/b$	$-1/2Fx$	$1/2Fx^2/b$	x^2/b^2		
HG b	-1	$-1/2Fb+1/2Fx$	$1/2Fb-1/2Fx$	1	$1/4Fb^2/EJ$	Xb/EJ
GH b	1	$1/2Fx$	$1/2Fx$	1		
HG	elongazione asta $N_{1HG}\varepsilon_{HG}L_{HG}$				$-Fb^2/EJ$	
A	molla nodo $-V_{1A}(V_{0A}+XV_{1A})/k_A$				$-3/8Fb^2/EJ$	$1/4Xb/EJ$
	totali				$-7/8Fb^2/EJ$	$23/12Xb/EJ$
	iperstatica $X=W_{GA}$				21/46Fb	

Sviluppi di calcolo iperstatica

$L^{XX}_{GA} = \int_o^b (1 - 2\,x/b + x^2/b^2)\ 1/EJ\ dx = [\,x - x^2/b + 1/3\,x^3/b^2\,]_o^b\ 1/EJ$

$= (\,b - b + 1/3\,b\,)\ 1/EJ = 1/3\ b/EJ$

$L^{XX}_{AG} = \int_o^b (\,x^2/b^2\,)\ 1/EJ\ dx = [1/3\,x^3/b^2\,]_o^b\ 1/EJ$

$= (1/3\,b)\ 1/EJ = 1/3\ b/EJ$

$L^{XX}_{HI} = \int_o^b (1 - 2\,x/b + x^2/b^2)\ 1/EJ\ dx = [\,x - x^2/b + 1/3\,x^3/b^2\,]_o^b\ 1/EJ$

$= (\,b - b + 1/3\,b\,)\ 1/EJ = 1/3\ b/EJ$

$L^{XX}_{IH} = \int_o^b (\,x^2/b^2\,)\ 1/EJ\ dx = [1/3\,x^3/b^2\,]_o^b\ 1/EJ$

$= (1/3\,b)\ 1/EJ = 1/3\ b/EJ$

$L^{XX}_{HG} = \int_o^b (1)\ 1/EJ\ dx = [\,x\,]_o^b\ 1/EJ$

$= (\,b\,)\ 1/EJ = b/EJ$

$L^{XX}_{GH} = \int_o^b (1)\ 1/EJ\ dx = [\,x\,]_o^b\ 1/EJ$

$= (\,b\,)\ 1/EJ = b/EJ$

$L^{Xo}_{GA} = \int_o^b (1/2\,x/b - 1/2\,x^2/b^2)\ Fb\ 1/EJ\ dx = [1/4\,x^2/b - 1/6\,x^3/b^2\,]_o^b\ Fb\ 1/EJ$

$= (1/4\,b - 1/6\,b)\ Fb\ 1/EJ = 1/12\ Fb^2/EJ$

$L^{Xo}_{AG} = \int_o^b (1/2\,x/b - 1/2\,x^2/b^2)\ Fb\ 1/EJ\ dx = [1/4\,x^2/b - 1/6\,x^3/b^2\,]_o^b\ Fb\ 1/EJ$

$= (1/4\,b - 1/6\,b)\ Fb\ 1/EJ = 1/12\ Fb^2/EJ$

$L^{Xo}_{HI} = \int_o^b (1/2 - x/b + 1/2\,x^2/b^2)\ Fb\ 1/EJ\ dx = [1/2\,x - 1/2\,x^2/b + 1/6\,x^3/b^2\,]_o^b\ Fb\ 1/EJ$

$= (1/2\,b - 1/2\,b + 1/6\,b)\ Fb\ 1/EJ = 1/6\ Fb^2/EJ$

$L^{Xo}_{IH} = \int_o^b (1/2\,x^2/b^2)\ Fb\ 1/EJ\ dx = [1/6\,x^3/b^2\,]_o^b\ Fb\ 1/EJ$

$= (1/6\,b)\ Fb\ 1/EJ = 1/6\ Fb^2/EJ$

$L^{Xo}_{HG} = \int_o^b (1/2 - 1/2\,x/b)\ Fb\ 1/EJ\ dx - 1\ \ (-1)\ \ (-1)\ \ Fb^2/EJ$

$= [1/2\,x - 1/4\,x^2/b\,]_o^b\ Fb\ 1/EJ\ - 1\ \ (-1)\ \ (-1)\ \ Fb^2/EJ$

$= (1/2\,b - 1/4\,b)\ Fb\ 1/EJ\ - 1\ \ (-1)\ \ (-1)\ \ Fb^2/EJ = -3/4\ \ Fb^2/EJ$

$L^{Xo}_{GH} = \int_o^b (1/2\,x/b)\ Fb\ 1/EJ\ dx - 1\ \ (-1)\ \ (-1)\ \ Fb^2/EJ = [1/4\,x^2/b\,]_o^b\ Fb\ 1/EJ\ - 1\ \ (-1)\ \ (-1)\ \ Fb^2/EJ$

$= (1/4\,b)\ Fb\ 1/EJ\ - 1\ \ (-1)\ \ (-1)\ \ Fb^2/EJ = -3/4\ \ Fb^2/EJ$

PROCEDIMENTO E RISULTATI 239159 ESΣ05.xxxx.089

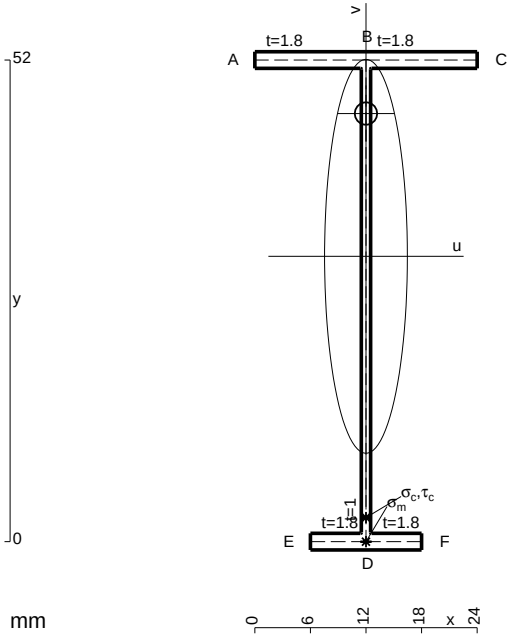

A = 116.8 mm^2
J_u = 52822. mm^4
J_v = 2333. mm^4
J_t = 87.32 mm^4
y_o = 15.41 mm
y_g = 30.81 mm
N = -485. N
T_y = 970. N
M_x = -402550. Nmm
x_m = 12. mm
v_m = -30.81 mm
$\sigma_m = N/A - Mv/J_u$ = -238.9 N/mm^2
y_c = 3. mm
u_c = -12. mm
v_c = -27.81 mm
$\sigma_c = N/A - Mv/J_u$ = -238.9 N/mm^2
$\tau_c = TS^*/tJ_u$ = 12.22 N/mm^2
$\tau_g = TS^*/tJ_u$ = 12.22 N/mm^2
t_c = 970. mm
$\sigma_o = \sqrt{\sigma^2 + 3\tau^2}$ = 239.9 N/mm^2

@ Adolfo Zavelani Rossi, Politecnico di Milano, vers.27.03.13 01.12.25

ESΣ05.xxxx.089

@ Adolfo Zavelani Rossi, Politecnico di Milano, vers.27.03.13 01.12.25

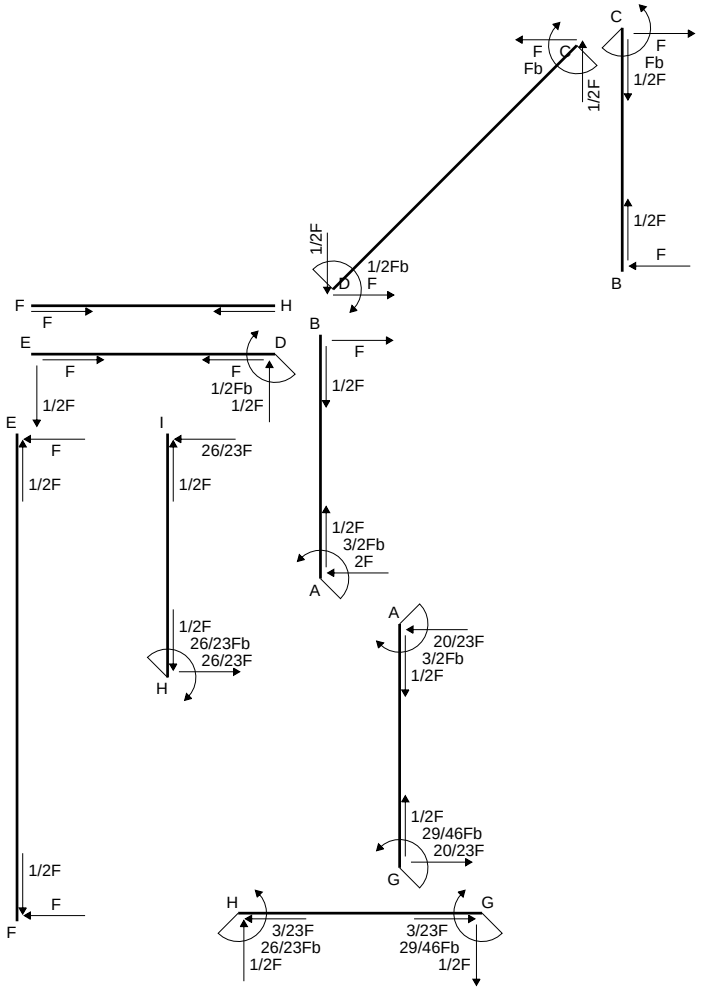
C
F
Fb
1/2F
1/2F
1/2F
F
B
1/2F
1/2Fb
D
F
F
H
E
D
F
F
1/2Fb
1/2F
1/2F
E
I
F
26/23F
1/2F
1/2F
1/2F
3/2Fb
2F
A
1/2F
26/23Fb
26/23F
H
A
20/23F
3/2Fb
1/2F
1/2F
29/46Fb
20/23F
G
1/2F
F
F
H
G
3/23F
26/23Fb
1/2F
3/23F
29/46Fb
1/2F

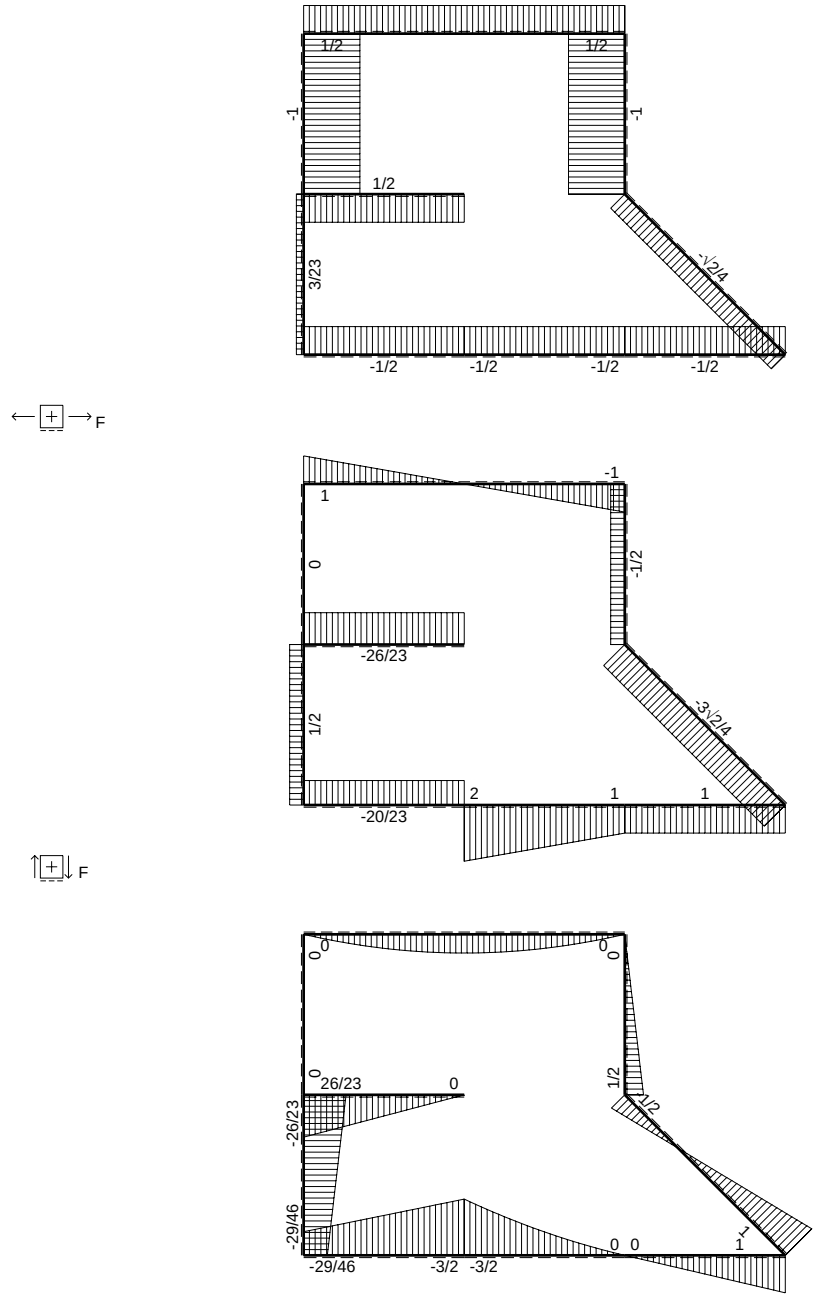
1/2
1/2
-1
-1
1/2
3/23
-√2/4
-1/2
-1/2
-1/2
-1/2
F
-1
1
0
-1/2
-26/23
1/2
-3√2/4
2
1
1
-20/23
F
0
0
0
0
26/23
0
1/2
-1/2
-26/23
-29/46
0
0
1
-29/46
-3/2
-3/2
Fb

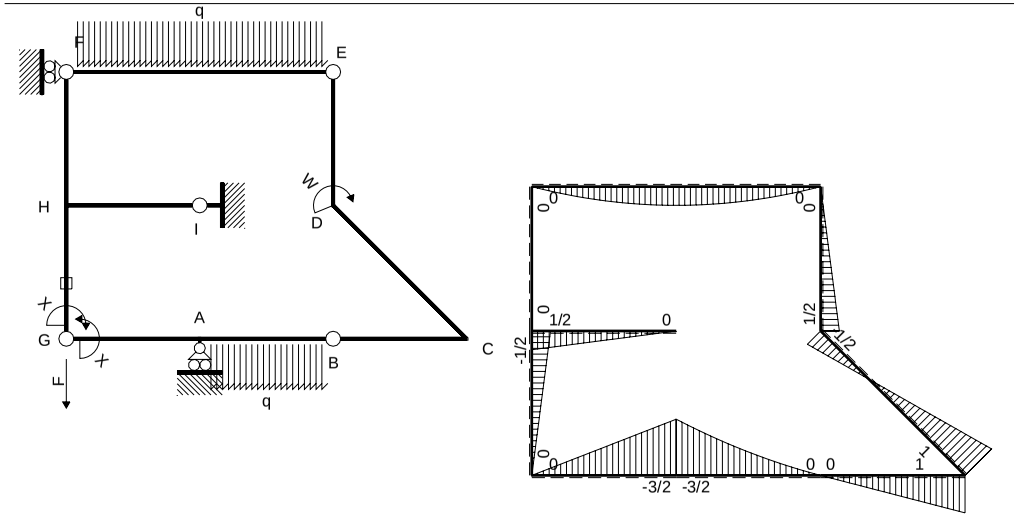

M_0 flessione da carichi assegnati

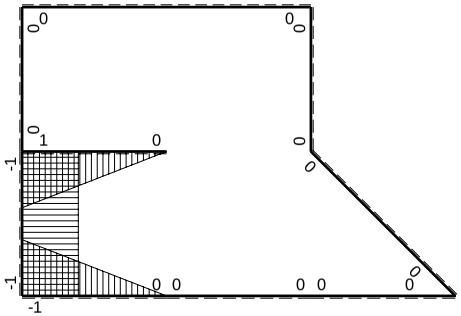

M_x flessione da iperstatica X=1

Quadro contributi PLV per iperstatica $X=W_{GA}$

→	$M_x(x)$	$M_o(x)$	M_xM_o	M_xM_x	$\int M_xM_o/EJdx$	$\int XM_xM_x/EJdx$
AB b	0	$-3/2Fb+2Fx-1/2qx^2$	0	0	0	0
BA b	0	$Fx+1/2qx^2$	0	0		
BC b	0	Fx	0	0	0	0
CB b	0	-Fb+Fx	0	0		
CD $\sqrt{2}$b	0	Fb-3$\sqrt{2}$/4Fx	0	0	0	0
DE b	0	1/2Fb-1/2Fx	0	0	0	0
ED b	0	-1/2Fx	0	0		
EF 2b	0	$-Fx+1/2qx^2$	0	0	0	0
FE 2b	0	$Fx-1/2qx^2$	0	0		
GA b	-1+x/b	-3/2Fx	$3/2Fx-3/2Fx^2/b$	$1-2x/b+x^2/b^2$	$1/4Fb^2/EJ$	1/3Xb/EJ
AG b	x/b	3/2Fb-3/2Fx	$3/2Fx-3/2Fx^2/b$	x^2/b^2		
FH b	0	0	0	0	0	0
HF b	0	0	0	0		
HI b	1-x/b	1/2Fb-1/2Fx	$1/2Fb-Fx+1/2Fx^2/b$	$1-2x/b+x^2/b^2$	$1/6Fb^2/EJ$	1/3Xb/EJ
IH b	-x/b	-1/2Fx	$1/2Fx^2/b$	x^2/b^2		
HG b	-1	-1/2Fb+1/2Fx	1/2Fb-1/2Fx	1	$1/4Fb^2/EJ$	Xb/EJ
GH b	1	1/2Fx	1/2Fx	1		
HG	elongazione asta $N_{1HG}\varepsilon_{HG}L_{HG}$				$-Fb^2/EJ$	
A	molla nodo $-V_{1A}(V_{0A}+XV_{1A})/k_A$				-7/8Fb^2/EJ	1/4Xb/EJ
	totali				$-29/24Fb^2/EJ$	23/12Xb/EJ
	iperstatica $X=W_{GA}$				29/46Fb	

Sviluppi di calcolo iperstatica

$L^{XX}_{GA} = \int_o^b (1 - 2\,x/b + x^2/b^2)\ 1/EJ\ dx = [\,x - x^2/b + 1/3\,x^3/b^2\,]_o^b\ 1/EJ$

$= (\,b - b + 1/3\,b\,)\ 1/EJ = 1/3\ b/EJ$

$L^{XX}_{AG} = \int_o^b (\,x^2/b^2\,)\ 1/EJ\ dx = [1/3\,x^3/b^2\,]_o^b\ 1/EJ$

$= (1/3\,b\,)\ 1/EJ = 1/3\ b/EJ$

$L^{XX}_{HI} = \int_o^b (1 - 2\,x/b + x^2/b^2)\ 1/EJ\ dx = [\,x - x^2/b + 1/3\,x^3/b^2\,]_o^b\ 1/EJ$

$= (\,b - b + 1/3\,b\,)\ 1/EJ = 1/3\ b/EJ$

$L^{XX}_{IH} = \int_o^b (\,x^2/b^2\,)\ 1/EJ\ dx = [1/3\,x^3/b^2\,]_o^b\ 1/EJ$

$= (1/3\,b\,)\ 1/EJ = 1/3\ b/EJ$

$L^{XX}_{HG} = \int_o^b (1)\ 1/EJ\ dx = [\,x\,]_o^b\ 1/EJ$

$= (\,b\,)\ 1/EJ = b/EJ$

$L^{XX}_{GH} = \int_o^b (1)\ 1/EJ\ dx = [\,x\,]_o^b\ 1/EJ$

$= (\,b\,)\ 1/EJ = b/EJ$

$L^{Xo}_{GA} = \int_o^b (3/2\,x/b - 3/2\,x^2/b^2)\ Fb\ 1/EJ\ dx = [3/4\,x^2/b - 1/2\,x^3/b^2\,]_o^b\ Fb\ 1/EJ$

$= (3/4\,b - 1/2\,b\,)\ Fb\ 1/EJ = 1/4\ Fb^2/EJ$

$L^{Xo}_{AG} = \int_o^b (3/2\,x/b - 3/2\,x^2/b^2)\ Fb\ 1/EJ\ dx = [3/4\,x^2/b - 1/2\,x^3/b^2\,]_o^b\ Fb\ 1/EJ$

$= (3/4\,b - 1/2\,b\,)\ Fb\ 1/EJ = 1/4\ Fb^2/EJ$

$L^{Xo}_{HI} = \int_o^b (1/2 - x/b + 1/2\,x^2/b^2)\ Fb\ 1/EJ\ dx = [1/2\,x - 1/2\,x^2/b + 1/6\,x^3/b^2\,]_o^b\ Fb\ 1/EJ$

$= (1/2\,b - 1/2\,b + 1/6\,b\,)\ Fb\ 1/EJ = 1/6\ Fb^2/EJ$

$L^{Xo}_{IH} = \int_o^b (1/2\,x^2/b^2\,)\ Fb\ 1/EJ\ dx = [1/6\,x^3/b^2\,]_o^b\ Fb\ 1/EJ$

$= (1/6\,b\,)\ Fb\ 1/EJ = 1/6\ Fb^2/EJ$

$L^{Xo}_{HG} = \int_o^b (1/2 - 1/2\,x/b\,)\ Fb\ 1/EJ\ dx - 1\ \ (-1)\ \ (-1)\ \ Fb^2/EJ$

$= [1/2\,x - 1/4\,x^2/b\,]_o^b\ Fb\ 1/EJ\ - 1\ \ (-1)\ \ (-1)\ \ Fb^2/EJ$

$= (1/2\,b - 1/4\,b\,)\ Fb\ 1/EJ\ - 1\ \ (-1)\ \ (-1)\ \ Fb^2/EJ = -3/4\ \ Fb^2/EJ$

$L^{Xo}_{GH} = \int_o^b (1/2\,x/b\,)\ Fb\ 1/EJ\ dx - 1\ \ (-1)\ \ (-1)\ \ Fb^2/EJ = [1/4\,x^2/b\,]_o^b\ Fb\ 1/EJ\ - 1\ \ (-1)\ \ (-1)\ \ Fb^2/EJ$

$= (1/4\,b\,)\ Fb\ 1/EJ\ - 1\ \ (-1)\ \ (-1)\ \ Fb^2/EJ = -3/4\ \ Fb^2/EJ$

PROCEDIMENTO E RISULTATI 238705 ESΣ05.xxxx.090

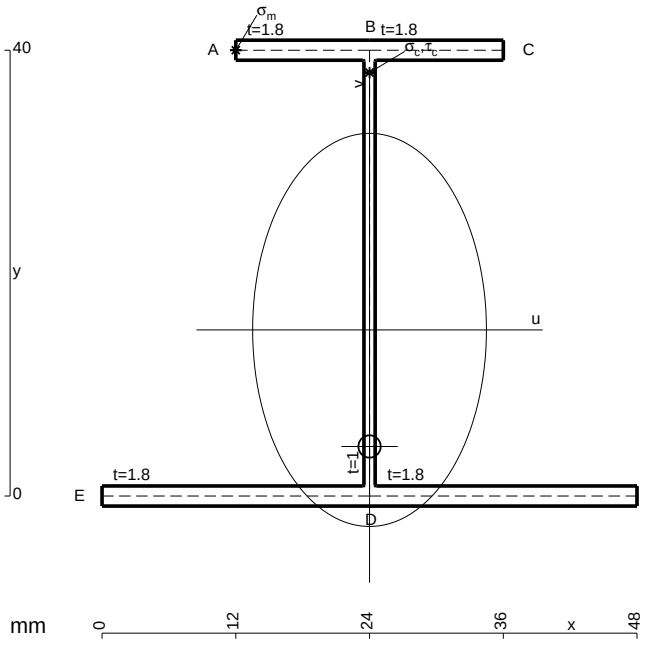

A = 169.6 mm^2
J_u = 52772. mm^4
J_v = 18662. mm^4
J_t = 153.3 mm^4
y_o = -10.46 mm
y_g = 14.91 mm
N = -415. N
T_y = 1660. N
M_x = -423300. Nmm
x_m = 12. mm
y_m = 40. mm
u_m = -12. mm
v_m = 25.09 mm
$\sigma_m = N/A - Mv/J_u$ = 198.8 N/mm^2
x_c = 24. mm
y_c = 40. mm
v_c = 25.09 mm
$\sigma_c = N/A - Mv/J_u$ = 198.8 N/mm^2
$\tau_c = TS^*/tJ_u$ = 34.1 N/mm^2
$\tau_g = TS^*/tJ_u$ = 34.1 N/mm^2
t_c = 830. mm
$\sigma_o = \sqrt{\sigma^2 + 3\tau^2}$ = 207.4 N/mm^2

@ Adolfo Zavelani Rossi, Politecnico di Milano, vers.27.03.13 01.12.25

ESΣ05.xxxx.090

@ Adolfo Zavelani Rossi, Politecnico di Milano, vers.27.03.13 01.12.25

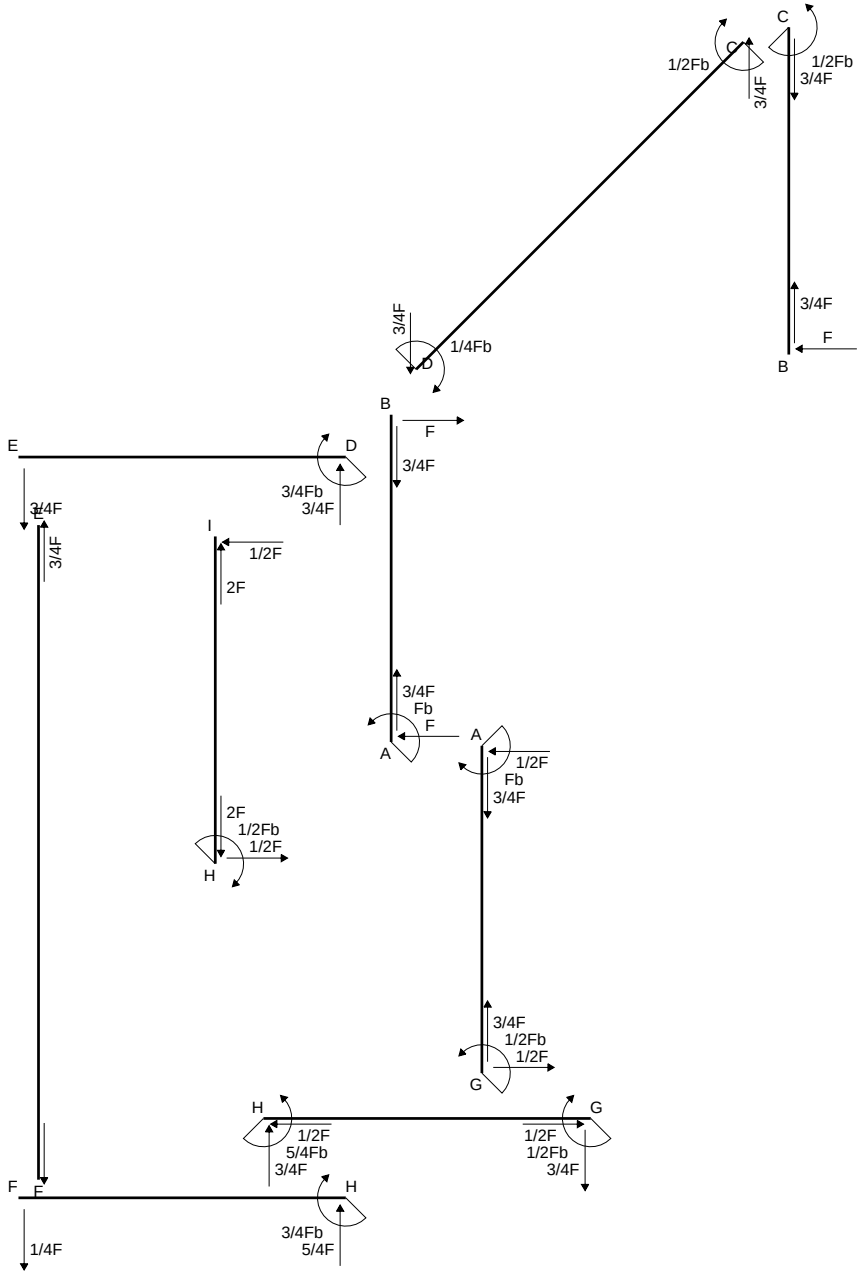
C
C
1/2Fb
1/2Fb
3/4F
3/4F
3/4F
3/4F
F
1/4Fb
D
B
B
F
3/4F
E
D
3/4Fb
3/4F
E
3/4F
3/4F
I
1/2F
2F
3/4F
Fb
F
A
A
1/2F
Fb
3/4F
2F
1/2Fb
1/2F
H
3/4F
1/2Fb
1/2F
G
H
G
1/2F
5/4Fb
3/4F
1/2F
1/2Fb
3/4F
F
F
H
3/4Fb
5/4F
1/4F

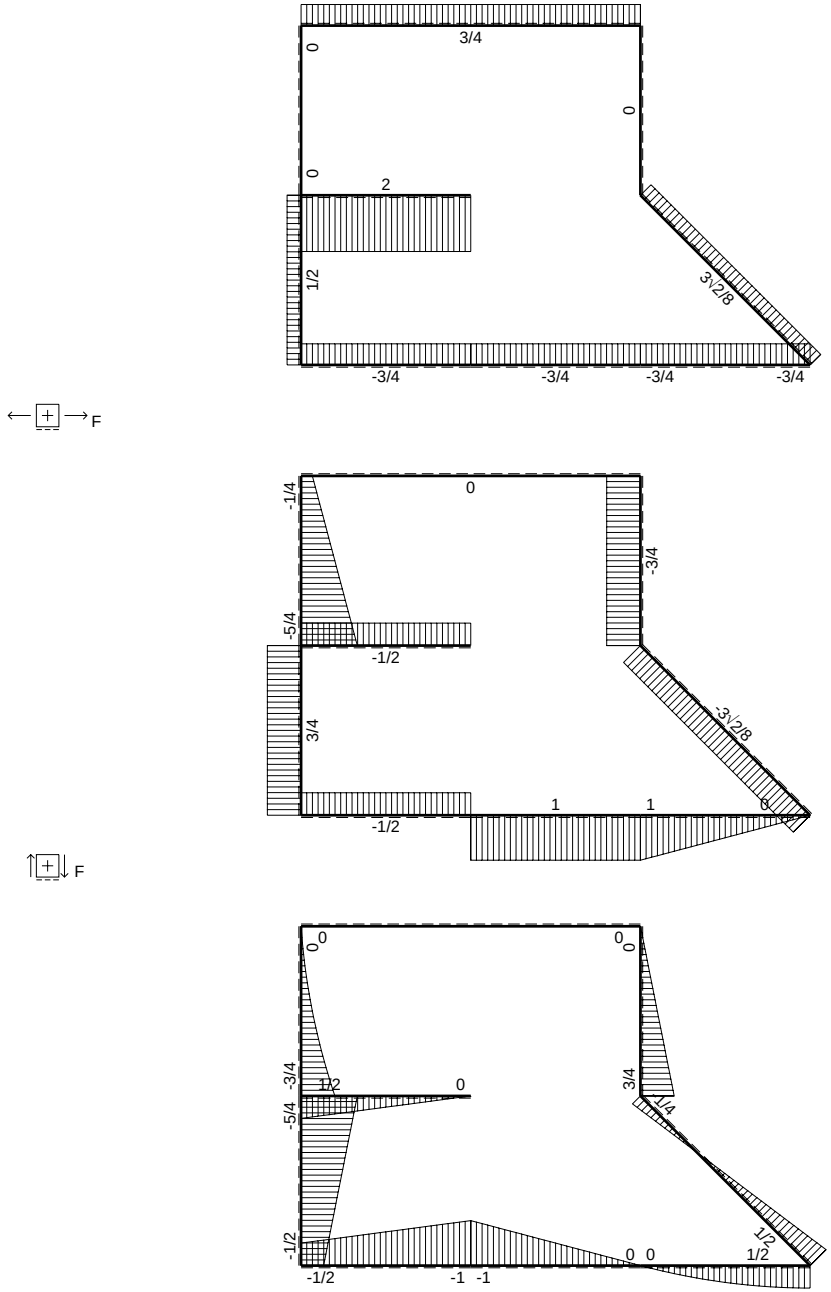
F
3/4
0
0
0
2
1/2
3√2/8
-3/4
-3/4
-3/4
-3/4
F
-1/4
0
-3/4
-5/4
-1/2
3/4
3√2/8
1
1
0
-1/2
F
0
0
0
-3/4
-5/4
1/2
0
3/4
1/4
1/2
0 0
-1/2
-1/2
-1 -1
Fb

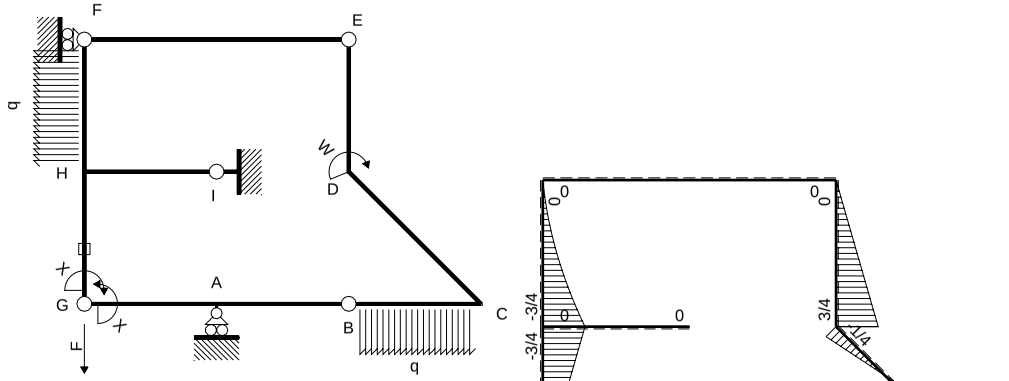

M_0 flessione da carichi assegnati

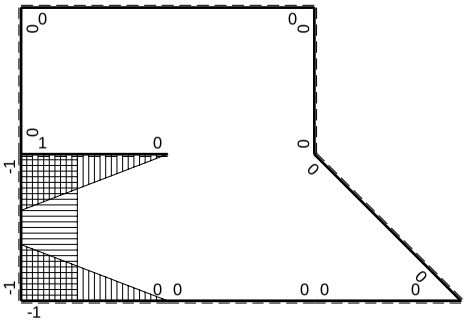

M_x flessione da iperstatica X=1

Quadro contributi PLV per iperstatica $X=W_{GA}$

→	$M_x(x)$	$M_0(x)$	M_xM_0	M_xM_x	$\int M_xM_0/EJdx$	$\int XM_xM_x/EJdx$
AB b	0	-Fb+Fx	0	0	0	0
BA b	0	Fx	0	0		
BC b	0	$Fx-1/2qx^2$	0	0	0	0
CB b	0	$-1/2Fb+1/2qx^2$	0	0		
CD √2b	0	$1/2Fb-3\sqrt{2}/8Fx$	0	0	0	0
DE b	0	3/4Fb-3/4Fx	0	0	0	0
ED b	0	-3/4Fx	0	0		
EF 2b	0	0	0	0	0	0
FE 2b	0	0	0	0		
GA b	-1+x/b	-Fx	$Fx-Fx^2/b$	$1-2x/b+x^2/b^2$	$1/6Fb^2/EJ$	1/3Xb/EJ
AG b	x/b	Fb-Fx	$Fx-Fx^2/b$	x^2/b^2		
FH b	0	$-1/4Fx-1/2qx^2$	0	0	0	0
HF b	0	$3/4Fb-5/4Fx+1/2qx^2$	0	0		
HI b	1-x/b	0	0	$1-2x/b+x^2/b^2$	0	1/3Xb/EJ
IH b	-x/b	0	0	x^2/b^2		
HG b	-1	-3/4Fb+3/4Fx	3/4Fb-3/4Fx	1	$3/8Fb^2/EJ$	Xb/EJ
GH b	1	3/4Fx	3/4Fx	1		
HG	elongazione asta $N_{1HG}\varepsilon_{HG}L_{HG}$				$-Fb^2/EJ$	
A	molla nodo $-V_{1A}(V_{0A}+XV_{1A})/k_A$				$-1/2Fb^2/EJ$	1/4Xb/EJ
	totali				$-23/24Fb^2/EJ$	23/12Xb/EJ
	iperstatica $X=W_{GA}$				1/2Fb	

Sviluppi di calcolo iperstatica

$L^{XX}_{GA} = \int_o^b (1 - 2\,x/b + x^2/b^2)\ 1/EJ\ dx = [\,x - x^2/b + 1/3\,x^3/b^2\,]_o^b\ 1/EJ$

$= (\,b - b + 1/3\,b\,)\ 1/EJ\ = 1/3\ b/EJ$

$L^{XX}_{AG} = \int_o^b (\,x^2/b^2\,)\ 1/EJ\ dx = [1/3\,x^3/b^2\,]_o^b\ 1/EJ$

$= (1/3\,b\,)\ 1/EJ\ = 1/3\ b/EJ$

$L^{XX}_{HI} = \int_o^b (1 - 2\,x/b + x^2/b^2)\ 1/EJ\ dx = [\,x - x^2/b + 1/3\,x^3/b^2\,]_o^b\ 1/EJ$

$= (\,b - b + 1/3\,b\,)\ 1/EJ\ = 1/3\ b/EJ$

$L^{XX}_{IH} = \int_o^b (\,x^2/b^2\,)\ 1/EJ\ dx = [1/3\,x^3/b^2\,]_o^b\ 1/EJ$

$= (1/3\,b\,)\ 1/EJ\ = 1/3\ b/EJ$

$L^{XX}_{HG} = \int_o^b (1)\ 1/EJ\ dx = [\,x\,]_o^b\ 1/EJ$

$= (\,b\,)\ 1/EJ\ =\ b/EJ$

$L^{XX}_{GH} = \int_o^b (1)\ 1/EJ\ dx = [\,x\,]_o^b\ 1/EJ$

$= (\,b\,)\ 1/EJ\ =\ b/EJ$

$L^{Xo}_{GA} = \int_o^b (\,x/b - x^2/b^2\,)\ Fb\ 1/EJ\ dx = [1/2\,x^2/b - 1/3\,x^3/b^2\,]_o^b\ Fb\ 1/EJ$

$= (1/2\,b - 1/3\,b\,)\ Fb\ 1/EJ\ = 1/6\ Fb^2/EJ$

$L^{Xo}_{AG} = \int_o^b (\,x/b - x^2/b^2\,)\ Fb\ 1/EJ\ dx = [1/2\,x^2/b - 1/3\,x^3/b^2\,]_o^b\ Fb\ 1/EJ$

$= (1/2\,b - 1/3\,b\,)\ Fb\ 1/EJ\ = 1/6\ Fb^2/EJ$

$L^{Xo}_{HG} = \int_o^b (3/4 - 3/4\,x/b\,)\ Fb\ 1/EJ\ dx - 1\ \ (-1)\ \ (-1)\ \ Fb^2/EJ$

$= [3/4\,x - 3/8\,x^2/b\,]_o^b\ Fb\ 1/EJ\ -\ 1\ \ (-1)\ \ (-1)\ \ Fb^2/EJ$

$= (3/4\,b - 3/8\,b\,)\ Fb\ 1/EJ\ -\ 1\ \ (-1)\ \ (-1)\ \ Fb^2/EJ = -5/8\ \ Fb^2/EJ$

$L^{Xo}_{GH} = \int_o^b (3/4\,x/b\,)\ Fb\ 1/EJ\ dx - 1\ \ (-1)\ \ (-1)\ \ Fb^2/EJ = [3/8\,x^2/b\,]_o^b\ Fb\ 1/EJ\ -\ 1\ \ (-1)\ \ (-1)\ \ Fb^2/EJ$

$= (3/8\,b\,)\ Fb\ 1/EJ\ -\ 1\ \ (-1)\ \ (-1)\ \ Fb^2/EJ = -5/8\ \ Fb^2/EJ$

PROCEDIMENTO E RISULTATI 210287 ESΣ05.xxxx.091

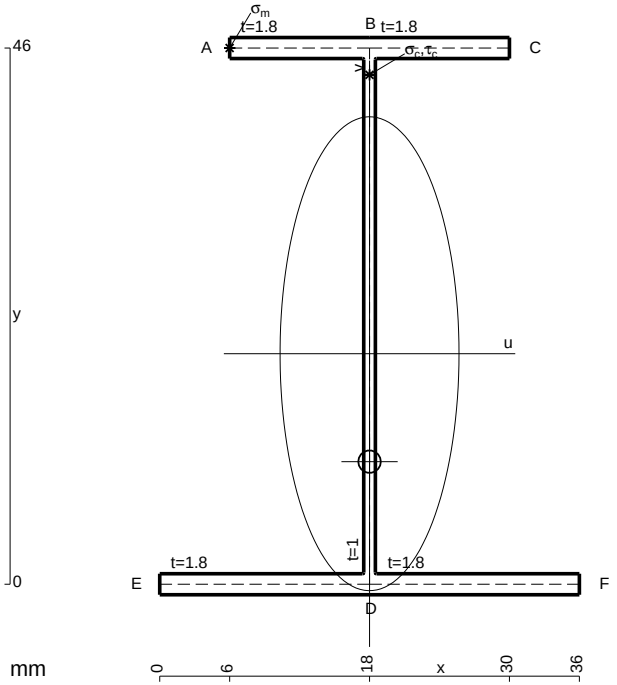

A = 154. mm^2
J_u = 63641. mm^4
J_v = 9072. mm^4
J_t = 132. mm^4
y_o = -9.26 mm
y_g = 19.77 mm
N = -930. N
T_y = 1240. N
M_x = -520800. Nmm
x_m = 6. mm
y_m = 46. mm
u_m = -12. mm
v_m = 26.23 mm
$\sigma_m = N/A - Mv/J_u$ = 208.6 N/mm^2
x_c = 18. mm
y_c = 46. mm
v_c = 26.23 mm
$\sigma_c = N/A - Mv/J_u$ = 208.6 N/mm^2
$\tau_c = TS^*/tJ_u$ = 22.08 N/mm^2
$\tau_g = TS^*/tJ_u$ = 22.08 N/mm^2
t_c = 1240. mm
$\sigma_o = \sqrt{\sigma^2 + 3\tau^2}$ = 212.1 N/mm^2

@ Adolfo Zavelani Rossi, Politecnico di Milano, vers.27.03.13 01.12.25

ESΣ05.xxxx.091

@ Adolfo Zavelani Rossi, Politecnico di Milano, vers.27.03.13 01.12.25

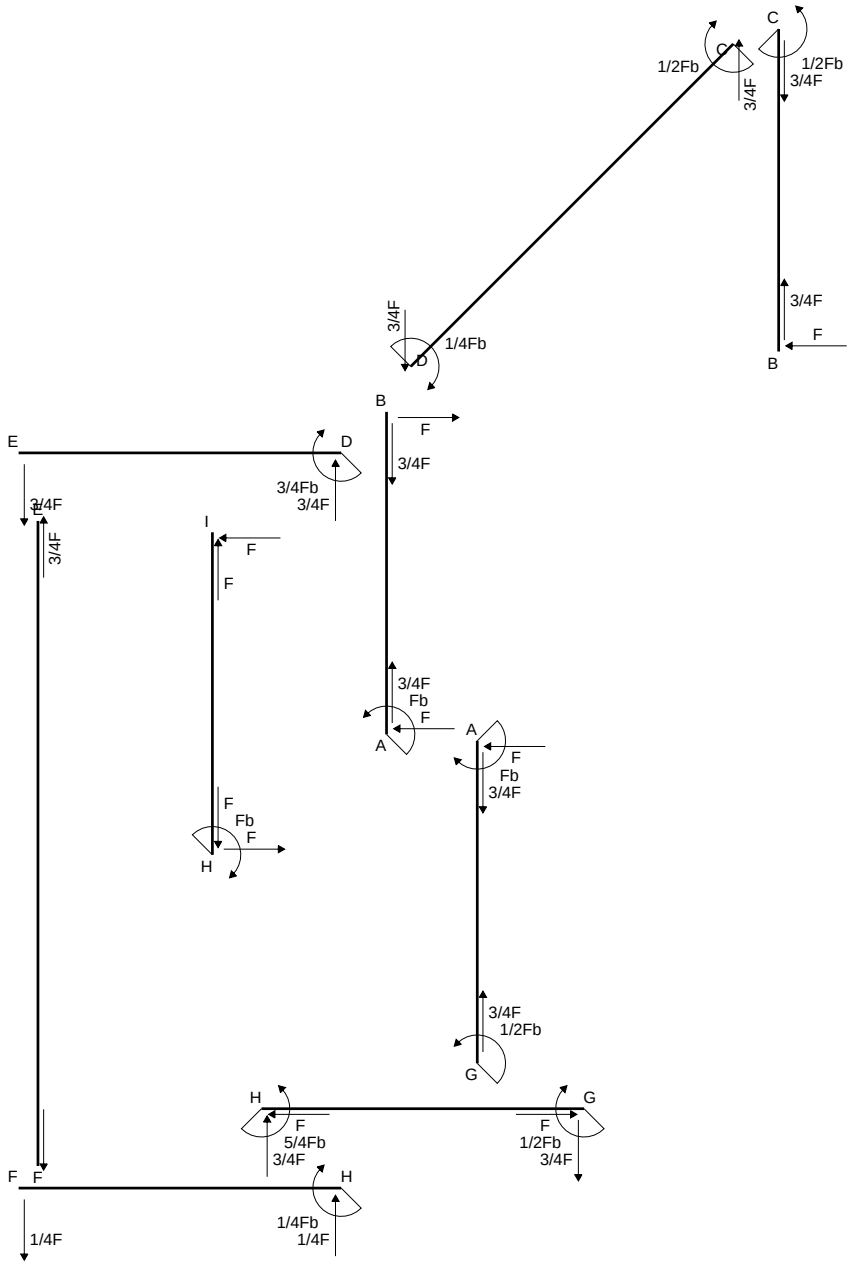
C
1/2Fb
C
1/2Fb
3/4F
3/4F
3/4F
1/4Fb
D
B
F
B
3/4F
E
D
3/4Fb
3/4F
3/4F
3/4F
I
F
F
3/4F
Fb
F
A
A
F
Fb
3/4F
F
Fb
F
H
3/4F
1/2Fb
G
H
G
F
5/4Fb
3/4F
F
1/2Fb
3/4F
F
F
H
1/4Fb
1/4F
1/4F

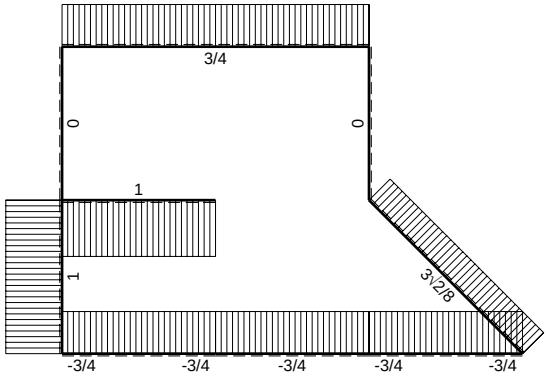
3/4
0
0
1
1
3√2/8
-3/4
-3/4
-3/4
-3/4
-3/4

F

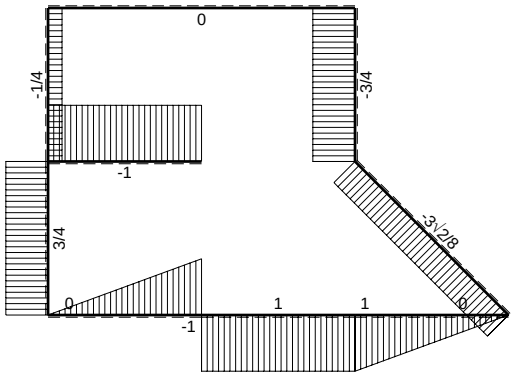
0
-1/4
-3/4
-1
3/4
3√2/8
0
1
1
0
-1

F

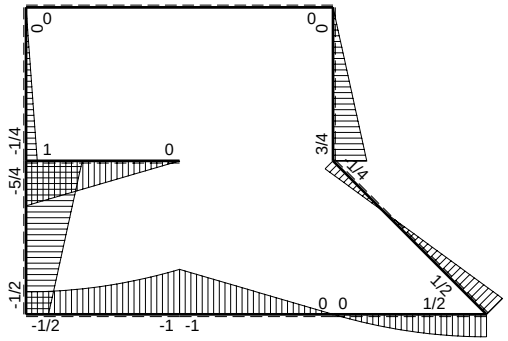
0
0
0
0
-1/4
1
0
3/4
-5/4
1/4
-1/2
1/2
0 0
-1/2
-1 -1

Fb

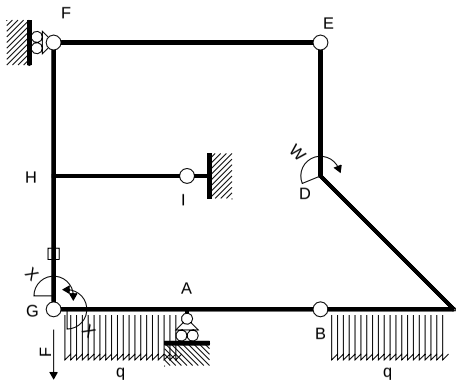

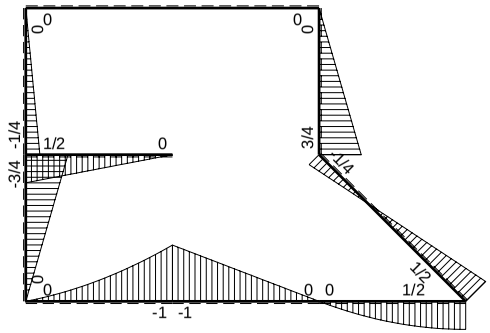

M_0 flessione da carichi assegnati

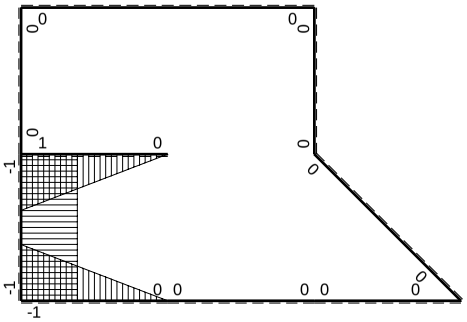

M_x flessione da iperstatica X=1

Quadro contributi PLV per iperstatica $X=W_{GA}$

→	$M_x(x)$	$M_o(x)$	M_xM_o	M_xM_x	$\int M_xM_o/EJdx$	$\int XM_xM_x/EJdx$
AB b	0	-Fb+Fx	0	0	0	0
BA b	0	Fx	0	0		
BC b	0	$Fx-1/2qx^2$	0	0	0	0
CB b	0	$-1/2Fb+1/2qx^2$	0	0		
CD √2b	0	$1/2Fb-3\sqrt{2}/8Fx$	0	0	0	0
DE b	0	3/4Fb-3/4Fx	0	0	0	0
ED b	0	-3/4Fx	0	0		
EF 2b	0	0	0	0	0	0
FE 2b	0	0	0	0		
GA b	-1+x/b	$-1/2Fx-1/2qx^2$	$1/2Fx-1/2qx^3/b$	$1-2x/b+x^2/b^2$	$1/8Fb^2/EJ$	1/3Xb/EJ
AG b	x/b	$Fb-3/2Fx+1/2qx^2$	$Fx-3/2Fx^2/b+1/2qx^3/b$	x^2/b^2		
FH b	0	-1/4Fx	0	0	0	0
HF b	0	1/4Fb-1/4Fx	0	0		
HI b	1-x/b	1/2Fb-1/2Fx	$1/2Fb-Fx+1/2Fx^2/b$	$1-2x/b+x^2/b^2$	$1/6Fb^2/EJ$	1/3Xb/EJ
IH b	-x/b	-1/2Fx	$1/2Fx^2/b$	x^2/b^2		
HG b	-1	-3/4Fb+3/4Fx	3/4Fb-3/4Fx	1	$3/8Fb^2/EJ$	Xb/EJ
GH b	1	3/4Fx	3/4Fx	1		
HG	elongazione asta $N_{1HG}\varepsilon_{HG}L_{HG}$				$-Fb^2/EJ$	
A	molla nodo $-V_{1A}(V_{0A}+XV_{1A})/k_A$				$-5/8Fb^2/EJ$	1/4Xb/EJ
	totali				$-23/24Fb^2/EJ$	23/12Xb/EJ
	iperstatica $X=W_{GA}$				1/2Fb	

Sviluppi di calcolo iperstatica

$L^{XX}_{GA} = \int_o^b (1 - 2\,x/b + x^2/b^2)\ 1/EJ\ dx = [\,x - x^2/b + 1/3\,x^3/b^2\,]_o^b\ 1/EJ$

$= (\,b - b + 1/3\,b\,)\ 1/EJ\ = 1/3\ b/EJ$

$L^{XX}_{AG} = \int_o^b (\,x^2/b^2\,)\ 1/EJ\ dx = [1/3\,x^3/b^2\,]_o^b\ 1/EJ$

$= (1/3\,b\,)\ 1/EJ\ = 1/3\ b/EJ$

$L^{XX}_{HI} = \int_o^b (1 - 2\,x/b + x^2/b^2)\ 1/EJ\ dx = [\,x - x^2/b + 1/3\,x^3/b^2\,]_o^b\ 1/EJ$

$= (\,b - b + 1/3\,b\,)\ 1/EJ\ = 1/3\ b/EJ$

$L^{XX}_{IH} = \int_o^b (\,x^2/b^2\,)\ 1/EJ\ dx = [1/3\,x^3/b^2\,]_o^b\ 1/EJ$

$= (1/3\,b\,)\ 1/EJ\ = 1/3\ b/EJ$

$L^{XX}_{HG} = \int_o^b (1)\ 1/EJ\ dx = [\,x\,]_o^b\ 1/EJ$

$= (\,b\,)\ 1/EJ\ = b/EJ$

$L^{XX}_{GH} = \int_o^b (1)\ 1/EJ\ dx = [\,x\,]_o^b\ 1/EJ$

$= (\,b\,)\ 1/EJ\ = b/EJ$

$L^{Xo}_{GA} = \int_o^b (1/2\,x/b - 1/2\,x^3/b^3)\ Fb\ 1/EJ\ dx = [1/4\,x^2/b - 1/8\,x^4/b^3\,]_o^b\ Fb\ 1/EJ$

$= (1/4\,b - 1/8\,b\,)\ Fb\ 1/EJ\ = 1/8\ Fb^2/EJ$

$L^{Xo}_{AG} = \int_o^b (\,x/b - 3/2\,x^2/b^2 + 1/2\,x^3/b^3\,)\ Fb\ 1/EJ\ dx = [1/2\,x^2/b - 1/2\,x^3/b^2 + 1/8\,x^4/b^3\,]_o^b\ Fb\ 1/EJ$

$= (1/2\,b - 1/2\,b + 1/8\,b\,)\ Fb\ 1/EJ\ = 1/8\ Fb^2/EJ$

$L^{Xo}_{HI} = \int_o^b (1/2 - x/b + 1/2\,x^2/b^2\,)\ Fb\ 1/EJ\ dx = [1/2\,x - 1/2\,x^2/b + 1/6\,x^3/b^2\,]_o^b\ Fb\ 1/EJ$

$= (1/2\,b - 1/2\,b + 1/6\,b\,)\ Fb\ 1/EJ\ = 1/6\ Fb^2/EJ$

$L^{Xo}_{IH} = \int_o^b (1/2\,x^2/b^2\,)\ Fb\ 1/EJ\ dx = [1/6\,x^3/b^2\,]_o^b\ Fb\ 1/EJ$

$= (1/6\,b\,)\ Fb\ 1/EJ\ = 1/6\ Fb^2/EJ$

$L^{Xo}_{HG} = \int_o^b (3/4 - 3/4\,x/b\,)\ Fb\ 1/EJ\ dx - 1\ \ (-1)\ \ (-1)\ \ Fb^2/EJ$

$= [3/4\,x - 3/8\,x^2/b\,]_o^b\ Fb\ 1/EJ\ - 1\ \ (-1)\ \ (-1)\ \ Fb^2/EJ$

$= (3/4\,b - 3/8\,b\,)\ Fb\ 1/EJ\ - 1\ \ (-1)\ \ (-1)\ \ Fb^2/EJ = -5/8\ \ Fb^2/EJ$

$L^{Xo}_{GH} = \int_o^b (3/4\,x/b\,)\ Fb\ 1/EJ\ dx - 1\ \ (-1)\ \ (-1)\ \ Fb^2/EJ = [3/8\,x^2/b\,]_o^b\ Fb\ 1/EJ\ - 1\ \ (-1)\ \ (-1)\ \ Fb^2/EJ$

$= (3/8\,b\,)\ Fb\ 1/EJ\ - 1\ \ (-1)\ \ (-1)\ \ Fb^2/EJ = -5/8\ \ Fb^2/EJ$

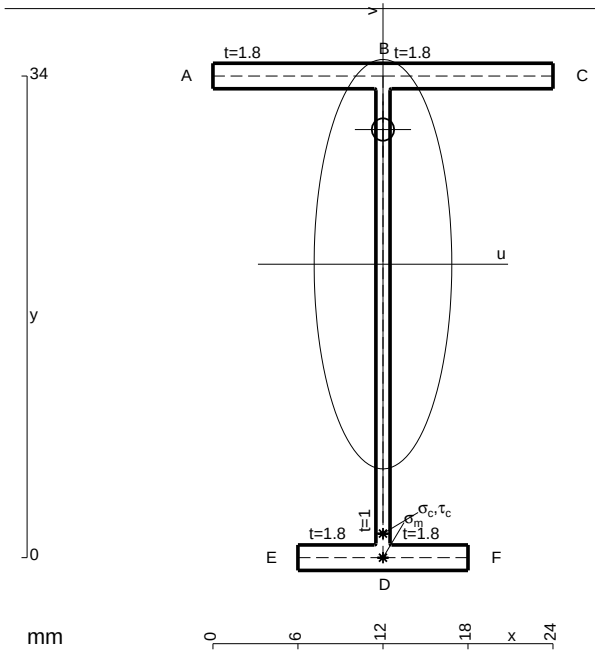

A = 98.8 mm^2
J_u = 20638. mm^4
J_v = 2333. mm^4
J_t = 81.32 mm^4
y_o = 9.506 mm
y_g = 20.72 mm
N = -472.5 N
T_y = 630. N
M_x = -214200. Nmm
x_m = 12. mm
v_m = -20.72 mm
$\sigma_m = N/A - Mv/J_u$ = -219.8 N/mm^2
y_c = 3. mm
u_c = -12. mm
v_c = -17.72 mm
$\sigma_c = N/A - Mv/J_u$ = -219.8 N/mm^2
$\tau_c = TS^*/tJ_u$ = 13.66 N/mm^2
$\tau_g = TS^*/tJ_u$ = 13.66 N/mm^2
t_c = 630. mm
$\sigma_o = \sqrt{\sigma^2 + 3\tau^2}$ = 221.1 N/mm^2

ESΣ05.xxxx.092

@ Adolfo Zavelani Rossi, Politecnico di Milano, vers.27.03.13 01.12.25

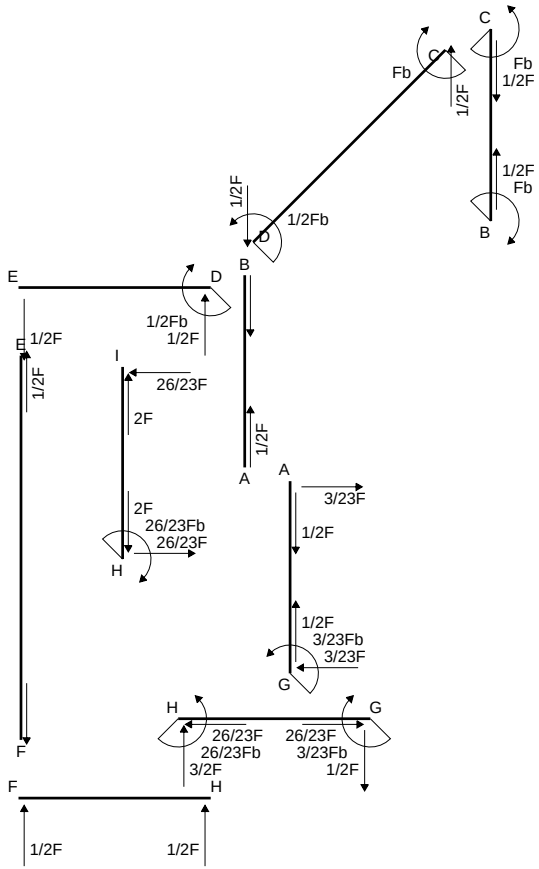
C
Fb
1/2F
Fb
1/2F
1/2F
Fb
1/2F
1/2Fb
D
B
E
D
1/2Fb
1/2F
E
1/2F
1/2F
I
26/23F
2F
1/2F
A
A
3/23F
2F
26/23Fb
26/23F
H
1/2F
1/2F
3/23Fb
3/23F
G
H
G
26/23F
26/23Fb
3/2F
26/23F
3/23Fb
1/2F
F
F
H
1/2F
1/2F

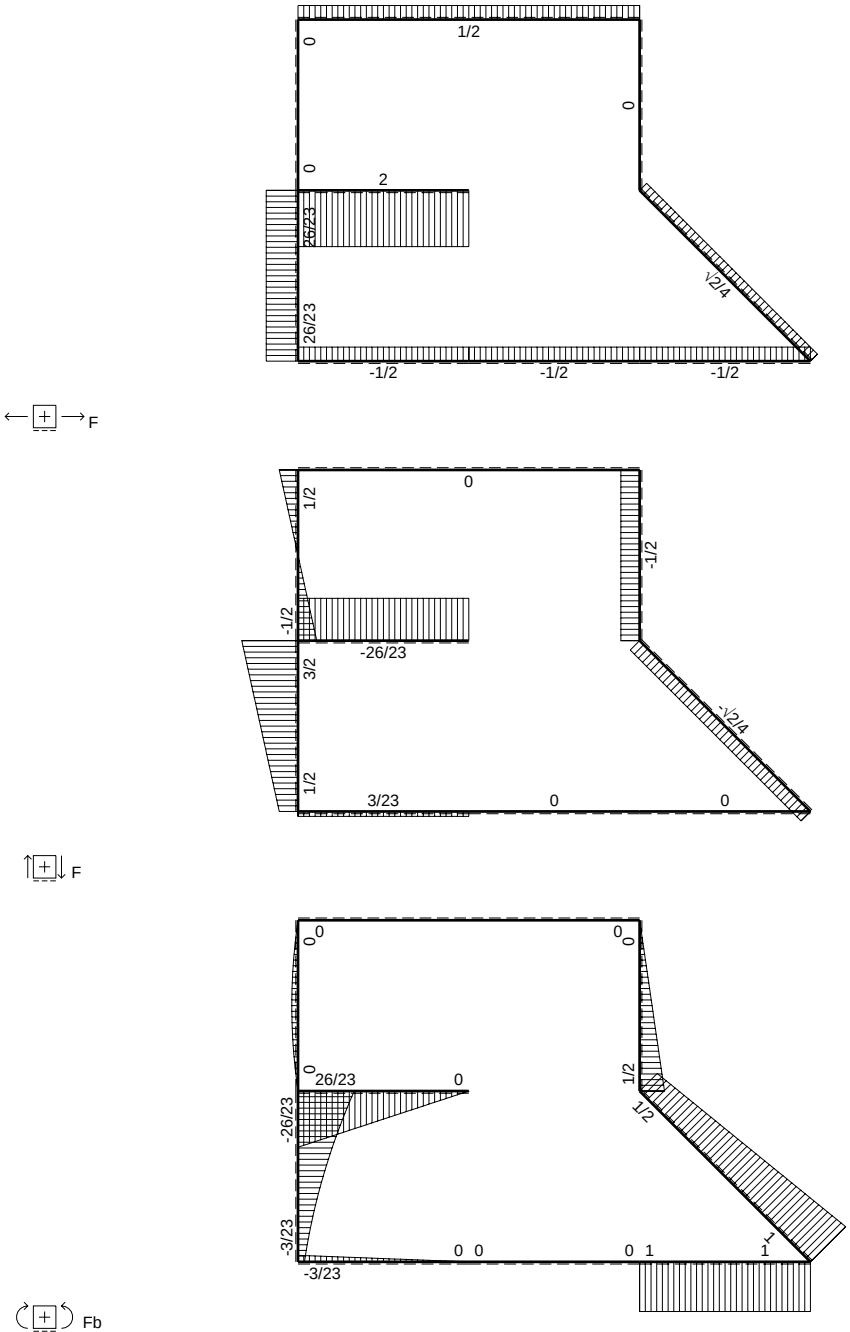
1/2
0
0
0
2
26/23
26/23
√2/4
-1/2
-1/2
-1/2
F
0
1/2
-1/2
-1/2
-26/23
3/2
-√2/4
1/2
3/23
0
0
F
0
0
0
0
26/23
0
1/2
1/2
-26/23
-3/23
0 0
0 1
1
1
-3/23
Fb

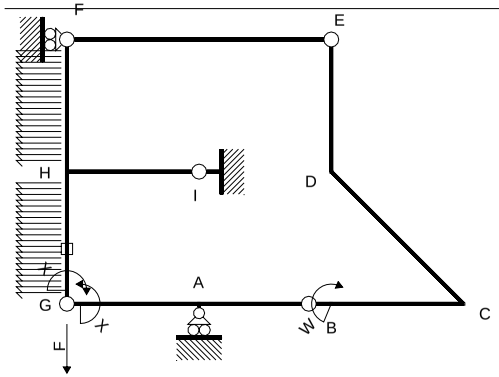

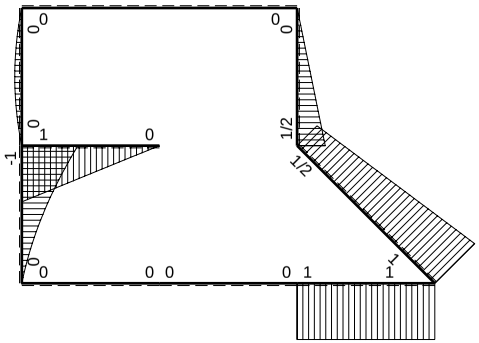

M_0 flessione da carichi assegnati

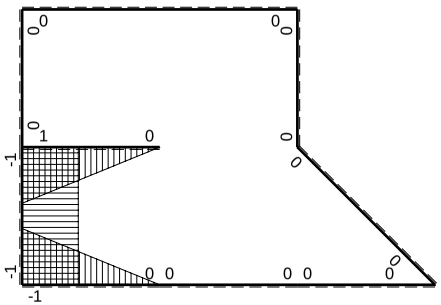

M_x flessione da iperstatica X=1

Quadro contributi PLV per iperstatica $X=W_{GA}$

→	$M_x(x)$	$M_0(x)$	M_xM_0	M_xM_x	$\int M_xM_0/EJdx$	$\int XM_xM_x/EJdx$
AB b	0	0	0	0	0	0
BA b	0	0	0	0		
BC b	0	Fb	0	0	0	0
CB b	0	-Fb	0	0		
CD √2b	0	Fb-√2/4Fx	0	0	0	0
DE b	0	1/2Fb-1/2Fx	0	0	0	0
ED b	0	-1/2Fx	0	0		
EF 2b	0	0	0	0	0	0
FE 2b	0	0	0	0		
GA b	-1+x/b	0	0	$1-2x/b+x^2/b^2$	0	1/3Xb/EJ
AG b	x/b	0	0	x^2/b^2		
FH b	0	$1/2Fx-1/2qx^2$	0	0	0	0
HF b	0	$-1/2Fx+1/2qx^2$	0	0		
HI b	1-x/b	Fb-Fx	$Fb-2Fx+Fx^2/b$	$1-2x/b+x^2/b^2$	$1/3Fb^2/EJ$	1/3Xb/EJ
IH b	-x/b	-Fx	Fx^2/b	x^2/b^2		
HG b	-1	$-Fb+3/2Fx-1/2qx^2$	$Fb-3/2Fx+1/2Fx^2/b$	1	$5/12Fb^2/EJ$	Xb/EJ
GH b	1	$1/2Fx+1/2qx^2$	$1/2Fx+1/2Fx^2/b$	1		
HG	elongazione asta $N_{1HG}\varepsilon_{HG}L_{HG}$				$-Fb^2/EJ$	
A	molla nodo $-V_{1A}(V_{0A}+XV_{1A})/k_A$					1/4Xb/EJ
	totali				$-1/4Fb^2/EJ$	23/12Xb/EJ
	iperstatica $X=W_{GA}$				3/23Fb	

Sviluppi di calcolo iperstatica

$L^{XX}_{GA} = \int_o^b (1 - 2\,x/b + x^2/b^2)\ 1/EJ\ dx = [\ x - x^2/b + 1/3\ x^3/b^2\ ]_o^b\ 1/EJ$

$= (\ b - b + 1/3\ b\ )\ 1/EJ\ = 1/3\ b/EJ$

$L^{XX}_{AG} = \int_o^b (\ x^2/b^2\ )\ 1/EJ\ dx = [1/3\ x^3/b^2\ ]_o^b\ 1/EJ$

$= (1/3\ b\ )\ 1/EJ\ = 1/3\ b/EJ$

$L^{XX}_{HI} = \int_o^b (1 - 2\,x/b + x^2/b^2)\ 1/EJ\ dx = [\ x - x^2/b + 1/3\ x^3/b^2\ ]_o^b\ 1/EJ$

$= (\ b - b + 1/3\ b\ )\ 1/EJ\ = 1/3\ b/EJ$

$L^{XX}_{IH} = \int_o^b (\ x^2/b^2\ )\ 1/EJ\ dx = [1/3\ x^3/b^2\ ]_o^b\ 1/EJ$

$= (1/3\ b\ )\ 1/EJ\ = 1/3\ b/EJ$

$L^{XX}_{HG} = \int_o^b (1)\ 1/EJ\ dx = [\ x\ ]_o^b\ 1/EJ$

$= (\ b\ )\ 1/EJ\ =\ b/EJ$

$L^{XX}_{GH} = \int_o^b (1)\ 1/EJ\ dx = [\ x\ ]_o^b\ 1/EJ$

$= (\ b\ )\ 1/EJ\ =\ b/EJ$

$L^{Xo}_{HI} = \int_o^b (1 - 2\,x/b + x^2/b^2)\ Fb\ 1/EJ\ dx = [\ x - x^2/b + 1/3\ x^3/b^2\ ]_o^b\ Fb\ 1/EJ$

$= (\ b - b + 1/3\ b\ )\ Fb\ 1/EJ\ = 1/3\ Fb^2/EJ$

$L^{Xo}_{IH} = \int_o^b (\ x^2/b^2\ )\ Fb\ 1/EJ\ dx = [1/3\ x^3/b^2\ ]_o^b\ Fb\ 1/EJ$

$= (1/3\ b\ )\ Fb\ 1/EJ\ = 1/3\ Fb^2/EJ$

$L^{Xo}_{HG} = \int_o^b (1 - 3/2\,x/b + 1/2\ x^2/b^2)\ Fb\ 1/EJ\ dx - 1\ \ (-1)\ \ (-1)\ \ Fb^2/EJ$

$= [\ x - 3/4\ x^2/b + 1/6\ x^3/b^2\ ]_o^b\ Fb\ 1/EJ\ -\ 1\ \ (-1)\ \ (-1)\ \ Fb^2/EJ$

$= (\ b - 3/4\ b + 1/6\ b\ )\ Fb\ 1/EJ\ -\ 1\ \ (-1)\ \ (-1)\ \ Fb^2/EJ = -7/12\ \ Fb^2/EJ$

$L^{Xo}_{GH} = \int_o^b (1/2\,x/b + 1/2\ x^2/b^2)\ Fb\ 1/EJ\ dx - 1\ \ (-1)\ \ (-1)\ \ Fb^2/EJ$

$= [1/4\ x^2/b + 1/6\ x^3/b^2\ ]_o^b\ Fb\ 1/EJ\ -\ 1\ \ (-1)\ \ (-1)\ \ Fb^2/EJ$

$= (1/4\ b + 1/6\ b\ )\ Fb\ 1/EJ\ -\ 1\ \ (-1)\ \ (-1)\ \ Fb^2/EJ = -7/12\ \ Fb^2/EJ$

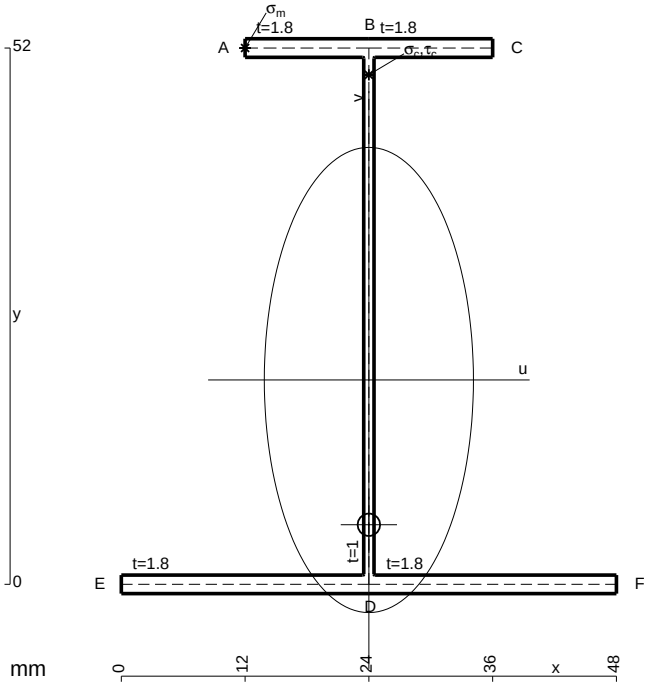

A = 181.6 mm^2
J_u = 92380. mm^4
J_v = 18662. mm^4
J_t = 157.3 mm^4
y_o = -14.04 mm
y_g = 19.82 mm
N = 410.1 N
T_y = -410.1 N
M_x = 661200. Nmm
x_m = 12. mm
y_m = 52. mm
u_m = -12. mm
v_m = 32.19 mm
$\sigma_m = N/A - Mv/J_u$ = -228.1 N/mm^2
x_c = 24. mm
y_c = 52. mm
v_c = 32.19 mm
$\sigma_c = N/A - Mv/J_u$ = -228.1 N/mm^2
$\tau_c = TS^*/tJ_u$ = 6.173 N/mm^2
$\tau_g = TS^*/tJ_u$ = 6.173 N/mm^2
t_c = 1160. mm
$\sigma_o = \sqrt{\sigma^2 + 3\tau^2}$ = 228.4 N/mm^2

ESΣ05.xxxx.093

@ Adolfo Zavelani Rossi, Politecnico di Milano, vers.27.03.13 01.12.25

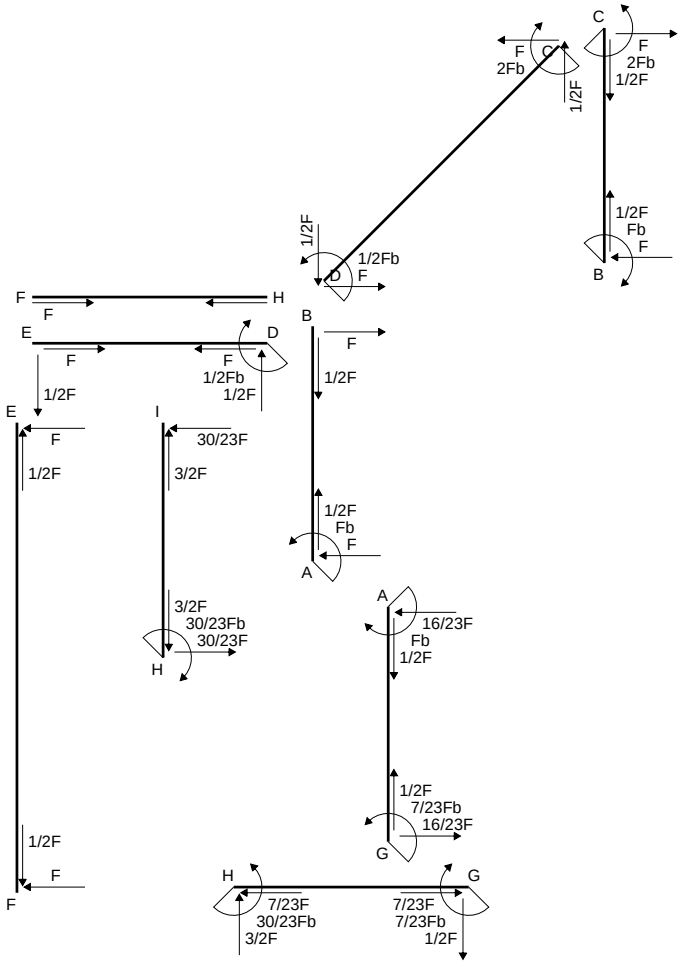
C
F
2Fb
1/2F
F
2Fb
1/2F
1/2F
1/2F
Fb
F
B
1/2F
1/2Fb
F
D
F
H
F
E
D
F
F
1/2Fb
1/2F
B
F
1/2F
E
F
1/2F
I
30/23F
3/2F
1/2F
Fb
F
A
3/2F
30/23Fb
30/23F
H
A
16/23F
Fb
1/2F
1/2F
7/23Fb
16/23F
G
1/2F
F
F
H
7/23F
30/23Fb
3/2F
7/23F
7/23Fb
1/2F
G

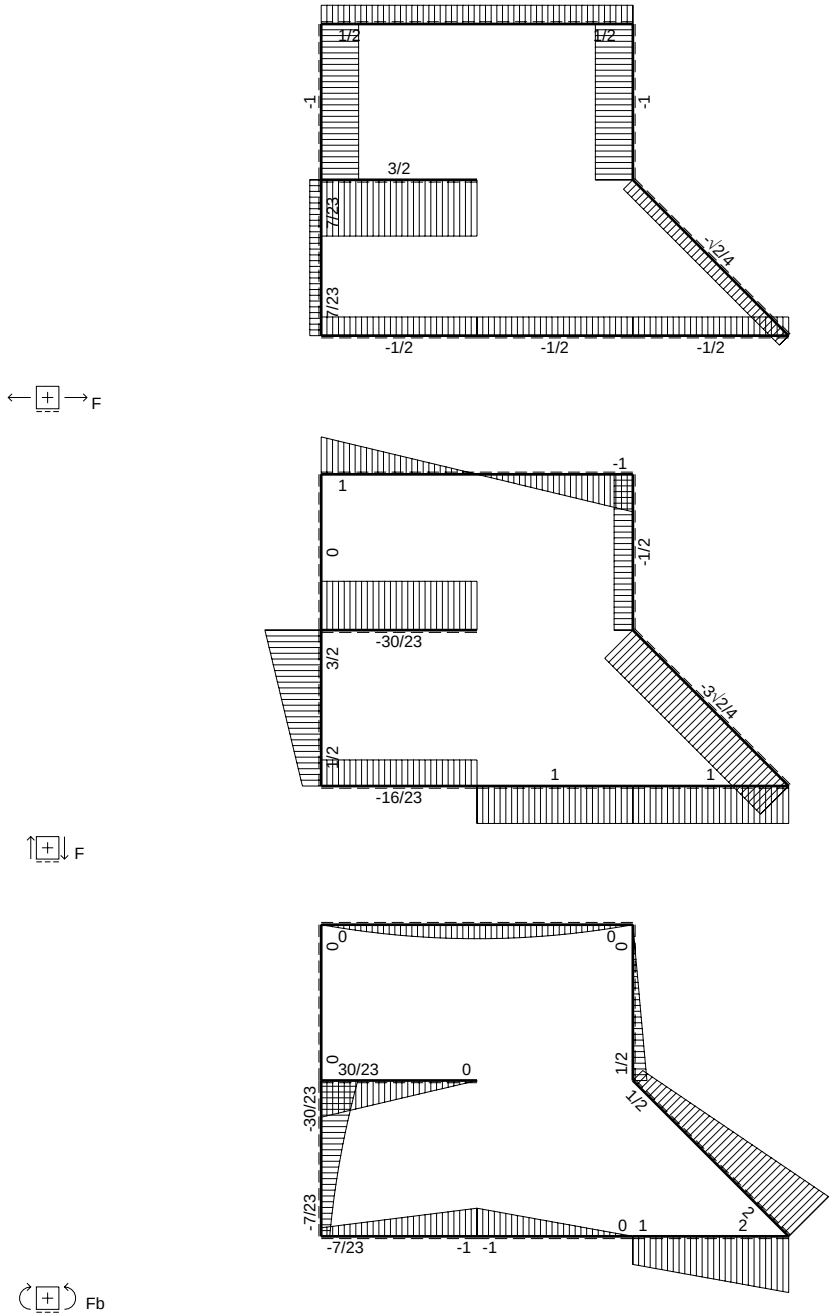
F
1/2
1/2
-1
-1
3/2
7/23
-√2/4
7/23
-1/2
-1/2
-1/2
F
-1
1
0
-1/2
-30/23
3/2
-3√2/4
1/2
1
1
-16/23
F
0
0
0
0
0
30/23
0
1/2
1/2
-30/23
-7/23
√2
0
1
2
-7/23
-1
-1
Fb

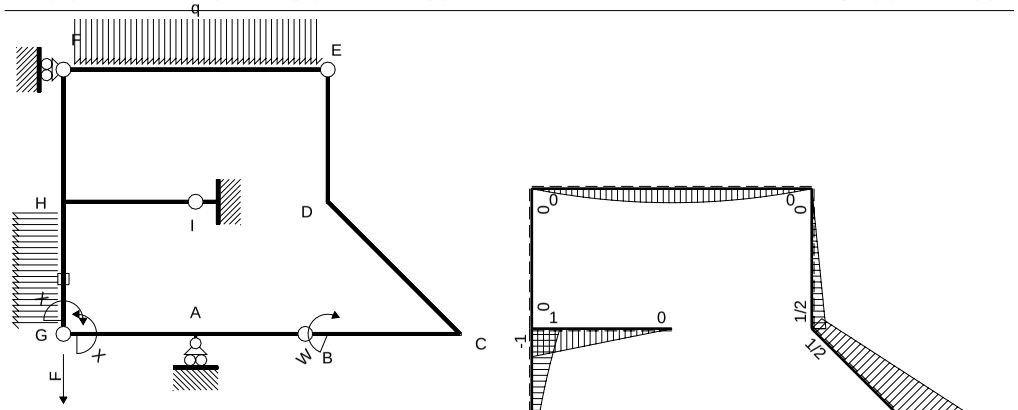

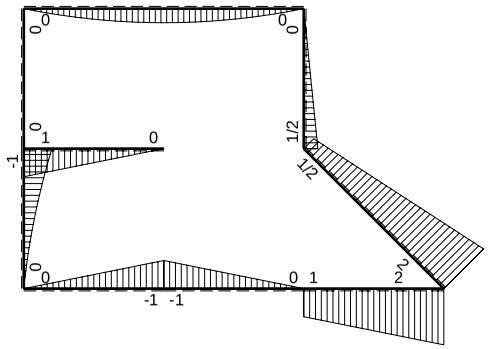

M_0 flessione da carichi assegnati

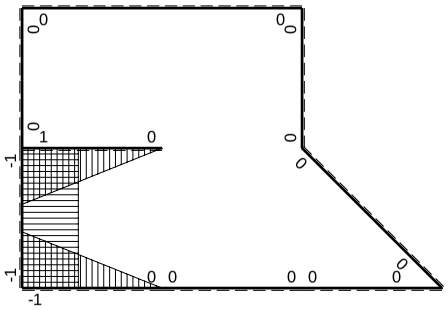

M_x flessione da iperstatica X=1

Quadro contributi PLV per iperstatica $X=W_{GA}$

→	$M_x(x)$	$M_0(x)$	M_xM_0	M_xM_x	$\int M_xM_0/EJdx$	$\int XM_xM_x/EJdx$
AB b	0	-Fb+Fx	0	0	0	0
BA b	0	Fx	0	0		
BC b	0	Fb+Fx	0	0	0	0
CB b	0	-2Fb+Fx	0	0		
CD √2b	0	2Fb-3√2/4Fx	0	0	0	0
DE b	0	1/2Fb-1/2Fx	0	0	0	0
ED b	0	-1/2Fx	0	0		
EF 2b	0	$-Fx+1/2qx^2$	0	0	0	0
FE 2b	0	$Fx-1/2qx^2$	0	0		
GA b	-1+x/b	-Fx	$Fx-Fx^2/b$	$1-2x/b+x^2/b^2$	$1/6Fb^2/EJ$	1/3Xb/EJ
AG b	x/b	Fb-Fx	$Fx-Fx^2/b$	x^2/b^2		
FH b	0	0	0	0	0	0
HF b	0	0	0	0		
HI b	1-x/b	Fb-Fx	$Fb-2Fx+Fx^2/b$	$1-2x/b+x^2/b^2$	$1/3Fb^2/EJ$	1/3Xb/EJ
IH b	-x/b	-Fx	Fx^2/b	x^2/b^2		
HG b	-1	$-Fb+3/2Fx-1/2qx^2$	$Fb-3/2Fx+1/2Fx^2/b$	1	$5/12Fb^2/EJ$	Xb/EJ
GH b	1	$1/2Fx+1/2qx^2$	$1/2Fx+1/2Fx^2/b$	1		
HG	elongazione asta $N_{1HG}\varepsilon_{HG}L_{HG}$				$-Fb^2/EJ$	
A	molla nodo $-V_{1A}(V_{0A}+XV_{1A})/k_A$				$-1/2Fb^2/EJ$	1/4Xb/EJ
	totali				$-7/12Fb^2/EJ$	23/12Xb/EJ
	iperstatica $X=W_{GA}$				7/23Fb	

Sviluppi di calcolo iperstatica

$L^{XX}_{GA} = \int_o^b (1 - 2\,x/b + x^2/b^2)\ 1/EJ\ dx = [\ x - x^2/b + 1/3\ x^3/b^2\ ]_o^b\ 1/EJ$

$= (\ b - b + 1/3\ b\ )\ 1/EJ\ = 1/3\ b/EJ$

$L^{XX}_{AG} = \int_o^b (\ x^2/b^2\ )\ 1/EJ\ dx = [1/3\ x^3/b^2\ ]_o^b\ 1/EJ$

$= (1/3\ b\ )\ 1/EJ\ = 1/3\ b/EJ$

$L^{XX}_{HI} = \int_o^b (1 - 2\,x/b + x^2/b^2)\ 1/EJ\ dx = [\ x - x^2/b + 1/3\ x^3/b^2\ ]_o^b\ 1/EJ$

$= (\ b - b + 1/3\ b\ )\ 1/EJ\ = 1/3\ b/EJ$

$L^{XX}_{IH} = \int_o^b (\ x^2/b^2\ )\ 1/EJ\ dx = [1/3\ x^3/b^2\ ]_o^b\ 1/EJ$

$= (1/3\ b\ )\ 1/EJ\ = 1/3\ b/EJ$

$L^{XX}_{HG} = \int_o^b (1)\ 1/EJ\ dx = [\ x\ ]_o^b\ 1/EJ$

$= (\ b\ )\ 1/EJ\ =\ b/EJ$

$L^{XX}_{GH} = \int_o^b (1)\ 1/EJ\ dx = [\ x\ ]_o^b\ 1/EJ$

$= (\ b\ )\ 1/EJ\ =\ b/EJ$

$L^{Xo}_{GA} = \int_o^b (\ x/b - x^2/b^2\ )\ Fb\ 1/EJ\ dx = [1/2\ x^2/b - 1/3\ x^3/b^2\ ]_o^b\ Fb\ 1/EJ$

$= (1/2\ b - 1/3\ b\ )\ Fb\ 1/EJ\ = 1/6\ \ Fb^2/EJ$

$L^{Xo}_{AG} = \int_o^b (\ x/b - x^2/b^2\ )\ Fb\ 1/EJ\ dx = [1/2\ x^2/b - 1/3\ x^3/b^2\ ]_o^b\ Fb\ 1/EJ$

$= (1/2\ b - 1/3\ b\ )\ Fb\ 1/EJ\ = 1/6\ \ Fb^2/EJ$

$L^{Xo}_{HI} = \int_o^b (1 - 2\,x/b + x^2/b^2)\ Fb\ 1/EJ\ dx = [\ x - x^2/b + 1/3\ x^3/b^2\ ]_o^b\ Fb\ 1/EJ$

$= (\ b - b + 1/3\ b\ )\ Fb\ 1/EJ\ = 1/3\ \ Fb^2/EJ$

$L^{Xo}_{IH} = \int_o^b (\ x^2/b^2\ )\ Fb\ 1/EJ\ dx = [1/3\ x^3/b^2\ ]_o^b\ Fb\ 1/EJ$

$= (1/3\ b\ )\ Fb\ 1/EJ\ = 1/3\ \ Fb^2/EJ$

$L^{Xo}_{HG} = \int_o^b (1 - 3/2\ x/b + 1/2\ x^2/b^2)\ Fb\ 1/EJ\ dx - 1\ \ (-1)\ \ (-1)\ \ Fb^2/EJ$

$= [\ x - 3/4\ x^2/b + 1/6\ x^3/b^2\ ]_o^b\ Fb\ 1/EJ\ - 1\ \ (-1)\ \ (-1)\ \ Fb^2/EJ$

$= (\ b - 3/4\ b + 1/6\ b\ )\ Fb\ 1/EJ\ - 1\ \ (-1)\ \ (-1)\ \ Fb^2/EJ = -7/12\ \ Fb^2/EJ$

$L^{Xo}_{GH} = \int_o^b (1/2\ x/b + 1/2\ x^2/b^2)\ Fb\ 1/EJ\ dx - 1\ \ (-1)\ \ (-1)\ \ Fb^2/EJ$

$= [1/4\ x^2/b + 1/6\ x^3/b^2\ ]_o^b\ Fb\ 1/EJ\ - 1\ \ (-1)\ \ (-1)\ \ Fb^2/EJ$

$= (1/4\ b + 1/6\ b\ )\ Fb\ 1/EJ\ - 1\ \ (-1)\ \ (-1)\ \ Fb^2/EJ = -7/12\ \ Fb^2/EJ$

PROCEDIMENTO E RISULTATI 239717 ESΣ05.xxxx.094

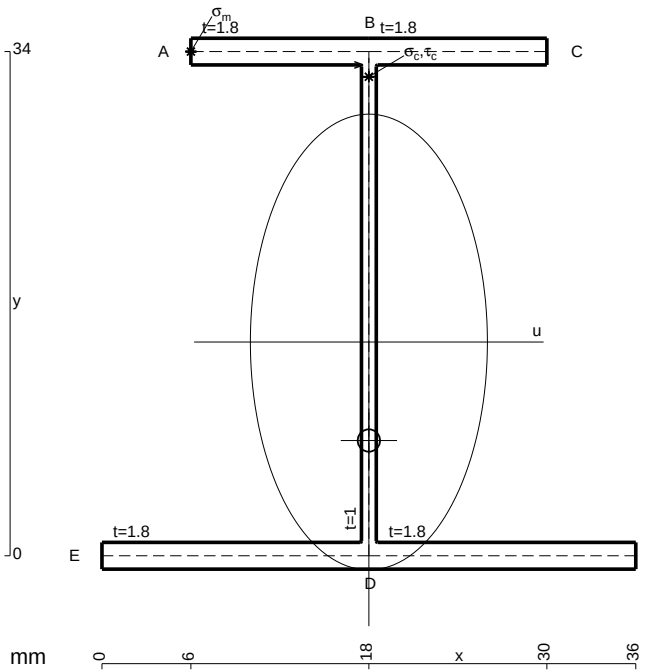

A = 142. mm^2
J_u = 33538. mm^4
J_v = 9072. mm^4
J_t = 128. mm^4
y_o = -6.643 mm
y_g = 14.41 mm
N = -180.3 N
T_y = -540.9 N
M_x = 408000. Nmm
x_m = 6. mm
y_m = 34. mm
u_m = -12. mm
v_m = 19.59 mm
$\sigma_m = N/A - Mv/J_u$ = -239.5 N/mm^2
x_c = 18. mm
y_c = 34. mm
v_c = 19.59 mm
$\sigma_c = N/A - Mv/J_u$ = -239.5 N/mm^2
$\tau_c = TS^*/tJ_u$ = 13.65 N/mm^2
$\tau_g = TS^*/tJ_u$ = 13.65 N/mm^2
t_c = 510. mm
$\sigma_o = \sqrt{\sigma^2 + 3\tau^2}$ = 240.7 N/mm^2

@ Adolfo Zavelani Rossi, Politecnico di Milano, vers.27.03.13 01.12.25

ESΣ05.xxxx.094

@ Adolfo Zavelani Rossi, Politecnico di Milano, vers.27.03.13 01.12.25

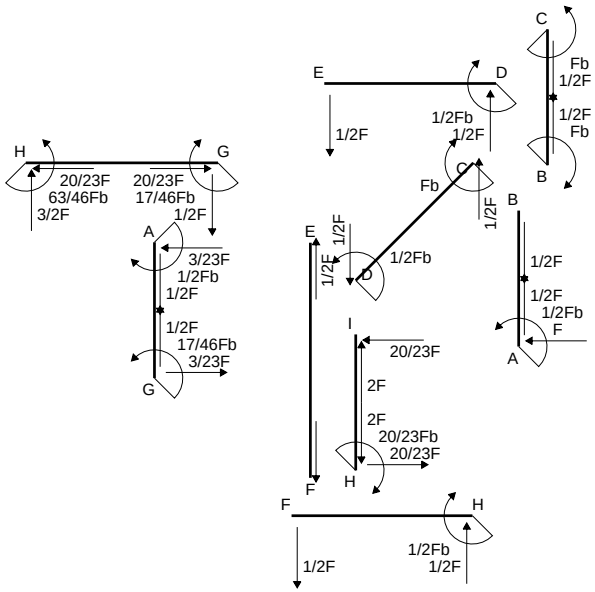
H
G
20/23F
63/46Fb
3/2F
20/23F
17/46Fb
1/2F
A
3/23F
1/2Fb
1/2F
1/2F
17/46Fb
3/23F
G
E
D
1/2F
1/2Fb
1/2F
C
Fb
1/2F
1/2F
Fb
B
Fb
C
1/2F
B
E
1/2F
1/2F
D
1/2Fb
1/2F
1/2F
1/2Fb
F
A
I
20/23F
2F
2F
20/23Fb
20/23F
H
F
F
H
1/2Fb
1/2F
1/2F

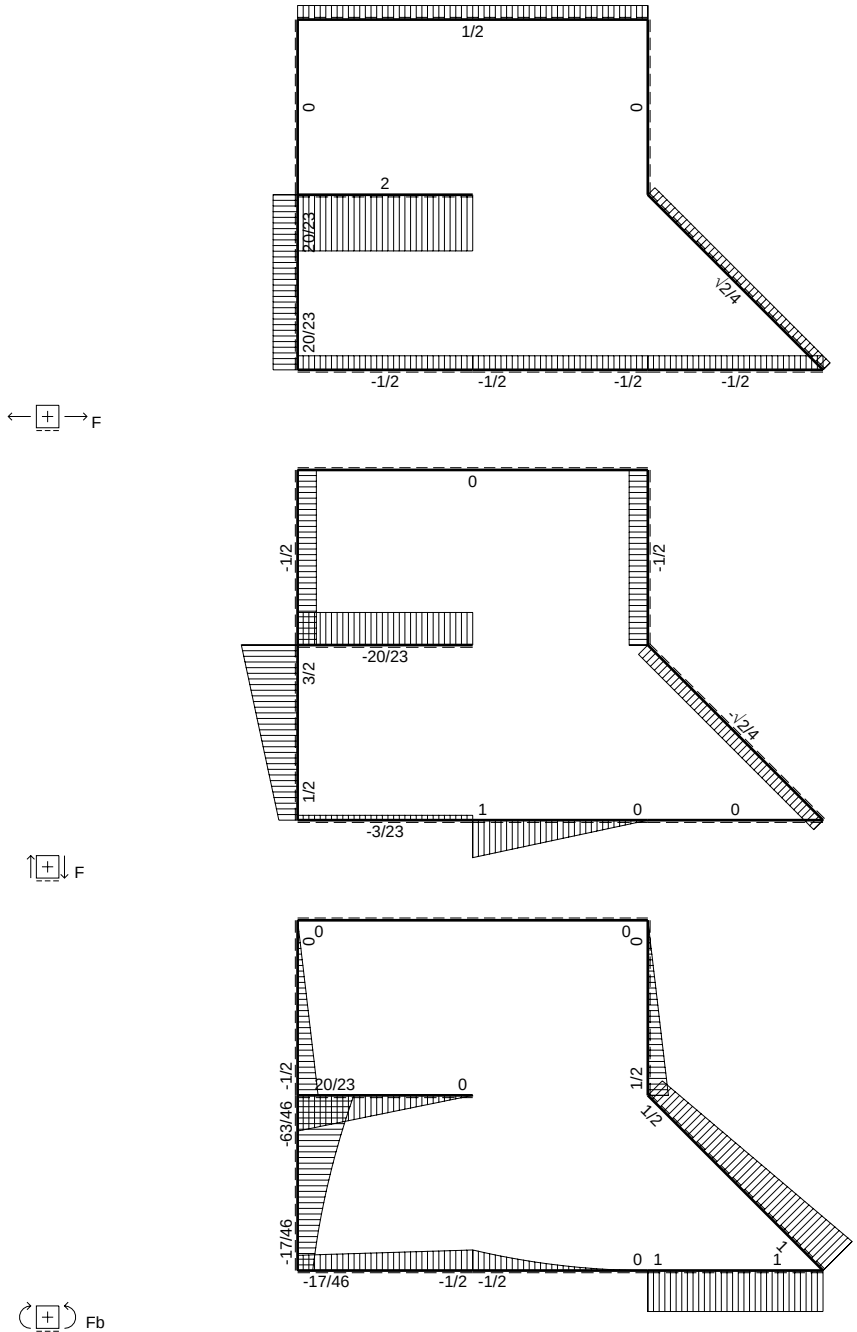
F
1/2
0
0
2
20/23
1/2
20/23
-1/2
-1/2
-1/2
-1/2
F
0
-1/2
-1/2
-20/23
3/2
1/2
1
0
0
-3/23
-1/2
Fb
0
0
0
0
-1/2
20/23
0
1/2
1/2
-63/46
-17/46
0
1
1
-17/46
-1/2
-1/2

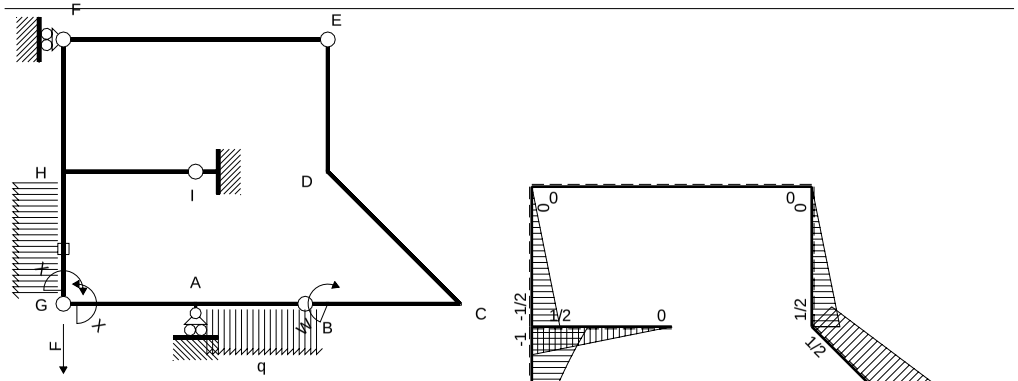

M_0 flessione da carichi assegnati

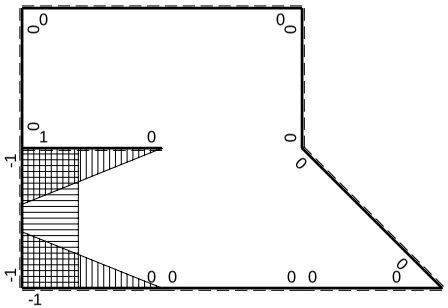

M_x flessione da iperstatica X=1

Quadro contributi PLV per iperstatica $X=W_{GA}$

→	$M_x(x)$	$M_o(x)$	M_xM_o	M_xM_x	$\int M_xM_o/EJdx$	$\int XM_xM_x/EJdx$
AB b	0	$-1/2Fb+Fx-1/2qx^2$	0	0	0	0
BA b	0	$1/2qx^2$	0	0		
BC b	0	Fb	0	0	0	0
CB b	0	-Fb	0	0		
CD $\sqrt{2}$b	0	$Fb-\sqrt{2}/4Fx$	0	0	0	0
DE b	0	1/2Fb-1/2Fx	0	0	0	0
ED b	0	-1/2Fx	0	0		
EF 2b	0	0	0	0	0	0
FE 2b	0	0	0	0		
GA b	-1+x/b	-1/2Fx	$1/2Fx-1/2Fx^2/b$	$1-2x/b+x^2/b^2$	$1/12Fb^2/EJ$	1/3Xb/EJ
AG b	x/b	1/2Fb-1/2Fx	$1/2Fx-1/2Fx^2/b$	x^2/b^2		
FH b	0	-1/2Fx	0	0	0	0
HF b	0	1/2Fb-1/2Fx	0	0		
HI b	1-x/b	1/2Fb-1/2Fx	$1/2Fb-Fx+1/2Fx^2/b$	$1-2x/b+x^2/b^2$	$1/6Fb^2/EJ$	1/3Xb/EJ
IH b	-x/b	-1/2Fx	$1/2Fx^2/b$	x^2/b^2		
HG b	-1	$-Fb+3/2Fx-1/2qx^2$	$Fb-3/2Fx+1/2Fx^2/b$	1	$5/12Fb^2/EJ$	Xb/EJ
GH b	1	$1/2Fx+1/2qx^2$	$1/2Fx+1/2Fx^2/b$	1		
HG	elongazione asta $N_{1HG}\varepsilon_{HG}L_{HG}$				$-Fb^2/EJ$	
A	molla nodo $-V_{1A}(V_{0A}+XV_{1A})/k_A$				$-3/8Fb^2/EJ$	1/4Xb/EJ
	totali				$-17/24Fb^2/EJ$	23/12Xb/EJ
	iperstatica $X=W_{GA}$				17/46Fb	

Sviluppi di calcolo iperstatica

$L^{XX}_{GA} = \int_o^b (1 - 2\,x/b + x^2/b^2)\ 1/EJ\ dx = [\ x - x^2/b + 1/3\ x^3/b^2\ ]_o^b\ 1/EJ$

$= (\ b - b + 1/3\ b\ )\ 1/EJ\ = 1/3\ b/EJ$

$L^{XX}_{AG} = \int_o^b (\ x^2/b^2\ )\ 1/EJ\ dx = [1/3\ x^3/b^2\ ]_o^b\ 1/EJ$

$= (1/3\ b\ )\ 1/EJ\ = 1/3\ b/EJ$

$L^{XX}_{HI} = \int_o^b (1 - 2\,x/b + x^2/b^2)\ 1/EJ\ dx = [\ x - x^2/b + 1/3\ x^3/b^2\ ]_o^b\ 1/EJ$

$= (\ b - b + 1/3\ b\ )\ 1/EJ\ = 1/3\ b/EJ$

$L^{XX}_{IH} = \int_o^b (\ x^2/b^2\ )\ 1/EJ\ dx = [1/3\ x^3/b^2\ ]_o^b\ 1/EJ$

$= (1/3\ b\ )\ 1/EJ\ = 1/3\ b/EJ$

$L^{XX}_{HG} = \int_o^b (1\ )\ 1/EJ\ dx = [\ x\ ]_o^b\ 1/EJ$

$= (\ b\ )\ 1/EJ\ =\ b/EJ$

$L^{XX}_{GH} = \int_o^b (1\ )\ 1/EJ\ dx = [\ x\ ]_o^b\ 1/EJ$

$= (\ b\ )\ 1/EJ\ =\ b/EJ$

$L^{Xo}_{GA} = \int_o^b (1/2\ x/b - 1/2\ x^2/b^2\ )\ Fb\ 1/EJ\ dx = [1/4\ x^2/b - 1/6\ x^3/b^2\ ]_o^b\ Fb\ 1/EJ$

$= (1/4\ b - 1/6\ b\ )\ Fb\ 1/EJ\ = 1/12\ \ Fb^2/EJ$

$L^{Xo}_{AG} = \int_o^b (1/2\ x/b - 1/2\ x^2/b^2\ )\ Fb\ 1/EJ\ dx = [1/4\ x^2/b - 1/6\ x^3/b^2\ ]_o^b\ Fb\ 1/EJ$

$= (1/4\ b - 1/6\ b\ )\ Fb\ 1/EJ\ = 1/12\ \ Fb^2/EJ$

$L^{Xo}_{HI} = \int_o^b (1/2 - x/b + 1/2\ x^2/b^2\ )\ Fb\ 1/EJ\ dx = [1/2\ x - 1/2\ x^2/b + 1/6\ x^3/b^2\ ]_o^b\ Fb\ 1/EJ$

$= (1/2\ b - 1/2\ b + 1/6\ b\ )\ Fb\ 1/EJ\ = 1/6\ \ Fb^2/EJ$

$L^{Xo}_{IH} = \int_o^b (1/2\ x^2/b^2\ )\ Fb\ 1/EJ\ dx = [1/6\ x^3/b^2\ ]_o^b\ Fb\ 1/EJ$

$= (1/6\ b\ )\ Fb\ 1/EJ\ = 1/6\ \ Fb^2/EJ$

$L^{Xo}_{HG} = \int_o^b (1 - 3/2\ x/b + 1/2\ x^2/b^2\ )\ Fb\ 1/EJ\ dx - 1\ \ (-1)\ \ (-1)\ \ Fb^2/EJ$

$= [\ x - 3/4\ x^2/b + 1/6\ x^3/b^2\ ]_o^b\ Fb\ 1/EJ\ - 1\ \ (-1)\ \ (-1)\ \ Fb^2/EJ$

$= (\ b - 3/4\ b + 1/6\ b\ )\ Fb\ 1/EJ\ - 1\ \ (-1)\ \ (-1)\ \ Fb^2/EJ = -7/12\ \ Fb^2/EJ$

$L^{Xo}_{GH} = \int_o^b (1/2\ x/b + 1/2\ x^2/b^2\ )\ Fb\ 1/EJ\ dx - 1\ \ (-1)\ \ (-1)\ \ Fb^2/EJ$

$= [1/4\ x^2/b + 1/6\ x^3/b^2\ ]_o^b\ Fb\ 1/EJ\ - 1\ \ (-1)\ \ (-1)\ \ Fb^2/EJ$

$= (1/4\ b + 1/6\ b\ )\ Fb\ 1/EJ\ - 1\ \ (-1)\ \ (-1)\ \ Fb^2/EJ = -7/12\ \ Fb^2/EJ$

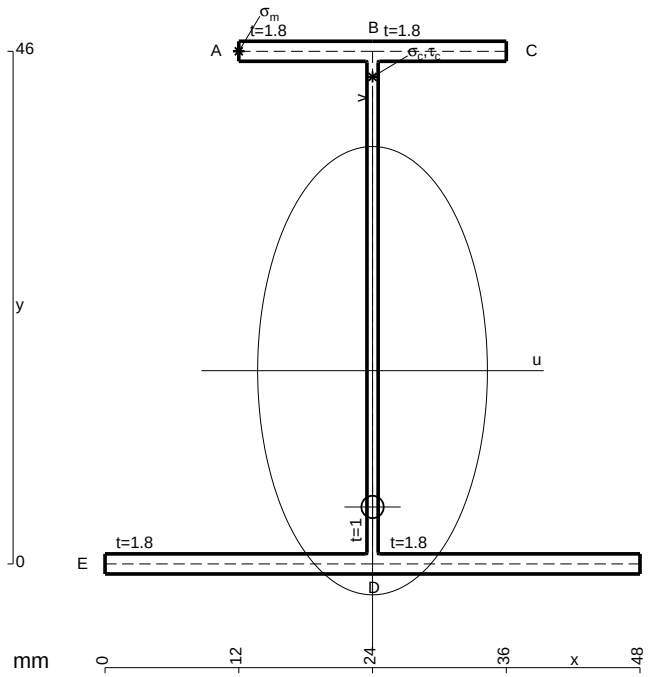

A = 175.6 mm^2
J_u = 71048. mm^4
J_v = 18662. mm^4
J_t = 155.3 mm^4
y_o = -12.23 mm
y_g = 17.34 mm
N = -875. N
T_y = 1750. N
M_x = -507500. Nmm
x_m = 12. mm
y_m = 46. mm
u_m = -12. mm
v_m = 28.66 mm
$\sigma_m = N/A - Mv/J_u$ = 199.7 N/mm^2
x_c = 24. mm
y_c = 46. mm
v_c = 28.66 mm
$\sigma_c = N/A - Mv/J_u$ = 199.7 N/mm^2
$\tau_c = TS^*/tJ_u$ = 30.49 N/mm^2
$\tau_g = TS^*/tJ_u$ = 30.49 N/mm^2
t_c = 1750. mm
$\sigma_o = \sqrt{\sigma^2 + 3\tau^2}$ = 206.6 N/mm^2

ESΣ05.xxxx.095

@ Adolfo Zavelani Rossi, Politecnico di Milano, vers.27.03.13 01.12.25

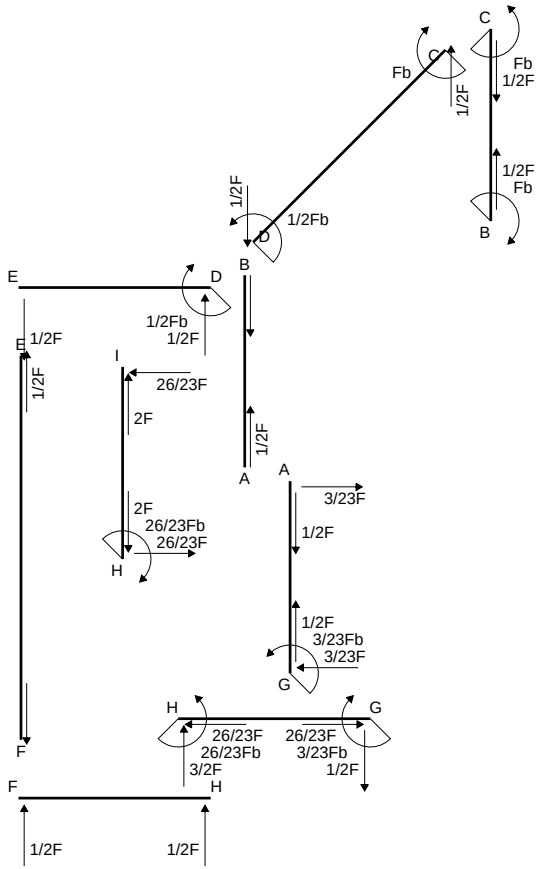
C
Fb
1/2F
Fb
1/2F
1/2F
Fb
1/2F
1/2Fb
D
B
E
D
1/2Fb
1/2F
E
1/2F
1/2F
I
26/23F
2F
1/2F
A
A
3/23F
2F
26/23Fb
26/23F
H
1/2F
1/2F
3/23Fb
3/23F
G
H
G
26/23F
26/23Fb
3/2F
26/23F
3/23Fb
1/2F
F
F
H
1/2F
1/2F

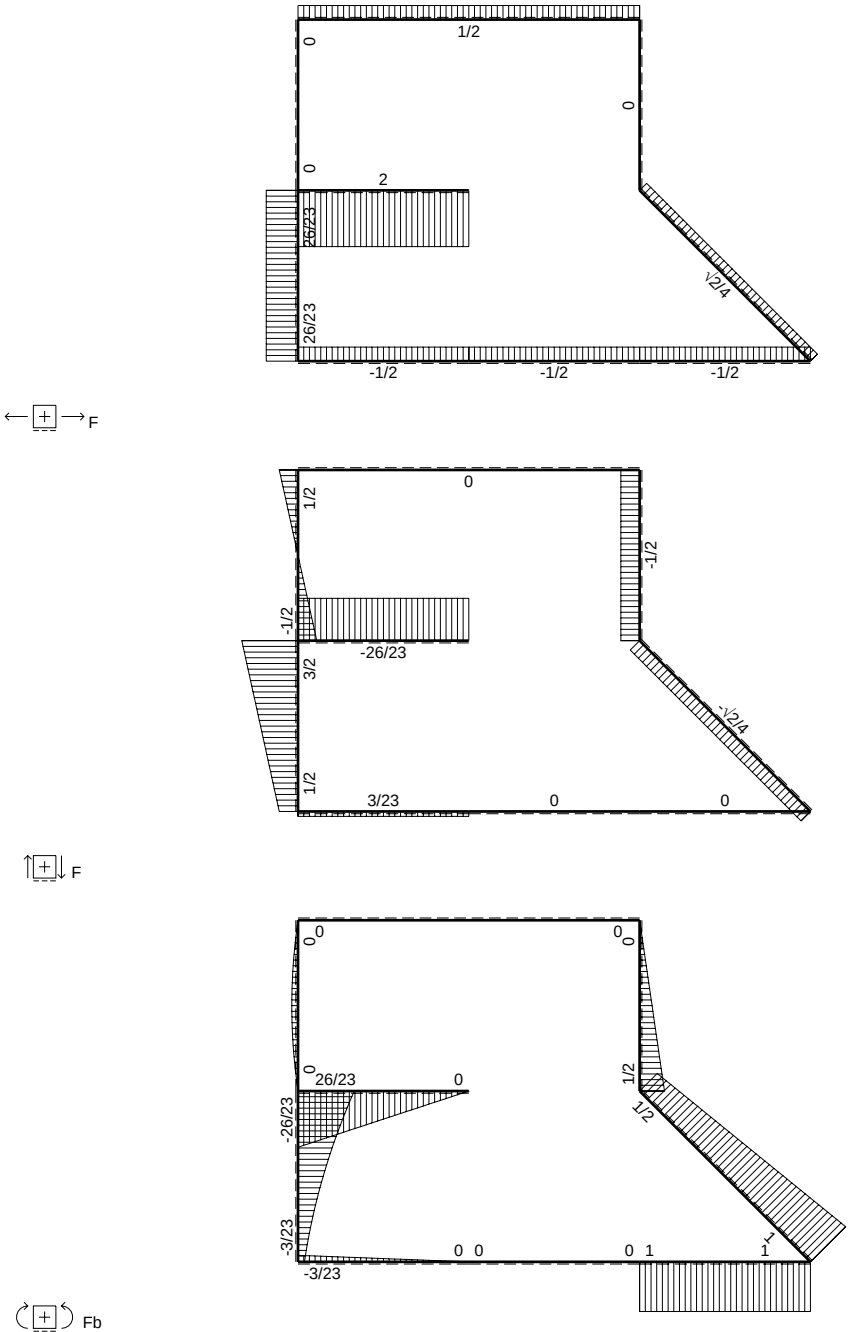
1/2
0
0
0
2
26/23
26/23
√2/4
-1/2
-1/2
-1/2
F
0
1/2
-1/2
-1/2
-26/23
3/2
-√2/4
1/2
3/23
0
0
F
0
0
0
0
26/23
0
1/2
1/2
-26/23
-3/23
0 0
0 1
1
1
-3/23
Fb

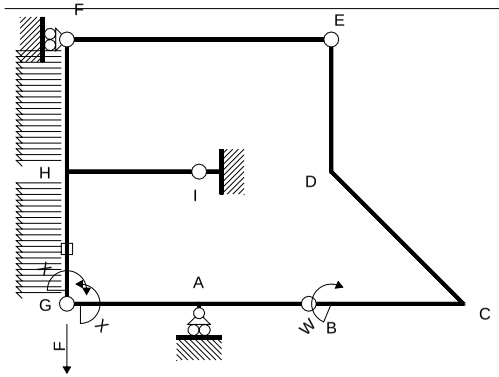

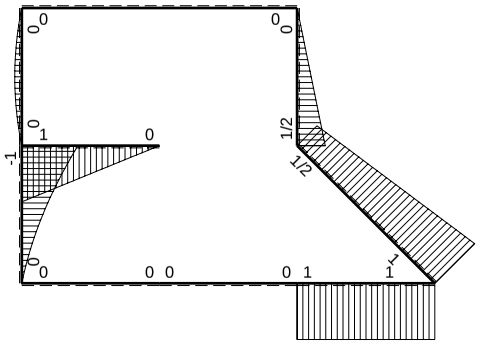

M_0 flessione da carichi assegnati

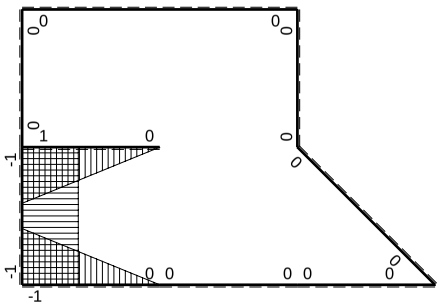

M_x flessione da iperstatica X=1

Quadro contributi PLV per iperstatica $X=W_{GA}$

→	$M_x(x)$	$M_o(x)$	M_xM_o	M_xM_x	$\int M_xM_o/EJdx$	$\int XM_xM_x/EJdx$
AB b	0	0	0	0	0	0
BA b	0	0	0	0		
BC b	0	Fb	0	0	0	0
CB b	0	-Fb	0	0		
CD √2b	0	Fb-√2/4Fx	0	0	0	0
DE b	0	1/2Fb-1/2Fx	0	0	0	0
ED b	0	-1/2Fx	0	0		
EF 2b	0	0	0	0	0	0
FE 2b	0	0	0	0		
GA b	-1+x/b	0	0	$1-2x/b+x^2/b^2$	0	1/3Xb/EJ
AG b	x/b	0	0	x^2/b^2		
FH b	0	$1/2Fx-1/2qx^2$	0	0	0	0
HF b	0	$-1/2Fx+1/2qx^2$	0	0		
HI b	1-x/b	Fb-Fx	$Fb-2Fx+Fx^2/b$	$1-2x/b+x^2/b^2$	$1/3Fb^2/EJ$	1/3Xb/EJ
IH b	-x/b	-Fx	Fx^2/b	x^2/b^2		
HG b	-1	$-Fb+3/2Fx-1/2qx^2$	$Fb-3/2Fx+1/2Fx^2/b$	1	$5/12Fb^2/EJ$	Xb/EJ
GH b	1	$1/2Fx+1/2qx^2$	$1/2Fx+1/2Fx^2/b$	1		
HG	elongazione asta $N_{1HG}\varepsilon_{HG}L_{HG}$				$-Fb^2/EJ$	
A	molla nodo $-V_{1A}(V_{0A}+XV_{1A})/k_A$					1/4Xb/EJ
	totali				$-1/4Fb^2/EJ$	23/12Xb/EJ
	iperstatica $X=W_{GA}$				3/23Fb	

Sviluppi di calcolo iperstatica

@ Adolfo Zavelani Rossi, Politecnico di Milano, vers.27.03.13 01.12.25

$L^{XX}_{GA} = \int_o^b (1 - 2\,x/b + x^2/b^2)\ 1/EJ\ dx = [\ x - x^2/b + 1/3\ x^3/b^2\ ]_o^b\ 1/EJ$

$= (\ b - b + 1/3\ b\ )\ 1/EJ\ = 1/3\ b/EJ$

$L^{XX}_{AG} = \int_o^b (\ x^2/b^2\ )\ 1/EJ\ dx = [1/3\ x^3/b^2\ ]_o^b\ 1/EJ$

$= (1/3\ b\ )\ 1/EJ\ = 1/3\ b/EJ$

$L^{XX}_{HI} = \int_o^b (1 - 2\,x/b + x^2/b^2)\ 1/EJ\ dx = [\ x - x^2/b + 1/3\ x^3/b^2\ ]_o^b\ 1/EJ$

$= (\ b - b + 1/3\ b\ )\ 1/EJ\ = 1/3\ b/EJ$

$L^{XX}_{IH} = \int_o^b (\ x^2/b^2\ )\ 1/EJ\ dx = [1/3\ x^3/b^2\ ]_o^b\ 1/EJ$

$= (1/3\ b\ )\ 1/EJ\ = 1/3\ b/EJ$

$L^{XX}_{HG} = \int_o^b (1\ )\ 1/EJ\ dx = [\ x\ ]_o^b\ 1/EJ$

$= (\ b\ )\ 1/EJ\ =\ b/EJ$

$L^{XX}_{GH} = \int_o^b (1\ )\ 1/EJ\ dx = [\ x\ ]_o^b\ 1/EJ$

$= (\ b\ )\ 1/EJ\ =\ b/EJ$

$L^{Xo}_{HI} = \int_o^b (1 - 2\,x/b + x^2/b^2)\ Fb\ 1/EJ\ dx = [\ x - x^2/b + 1/3\ x^3/b^2\ ]_o^b\ Fb\ 1/EJ$

$= (\ b - b + 1/3\ b\ )\ Fb\ 1/EJ\ = 1/3\ Fb^2/EJ$

$L^{Xo}_{IH} = \int_o^b (\ x^2/b^2\ )\ Fb\ 1/EJ\ dx = [1/3\ x^3/b^2\ ]_o^b\ Fb\ 1/EJ$

$= (1/3\ b\ )\ Fb\ 1/EJ\ = 1/3\ Fb^2/EJ$

$L^{Xo}_{HG} = \int_o^b (1 - 3/2\,x/b + 1/2\ x^2/b^2)\ Fb\ 1/EJ\ dx - 1\ \ (-1)\ \ (-1)\ \ Fb^2/EJ$

$= [\ x - 3/4\ x^2/b + 1/6\ x^3/b^2\ ]_o^b\ Fb\ 1/EJ\ \ - 1\ \ (-1)\ \ (-1)\ \ Fb^2/EJ$

$= (\ b - 3/4\ b + 1/6\ b\ )\ Fb\ 1/EJ\ \ - 1\ \ (-1)\ \ (-1)\ \ Fb^2/EJ = -7/12\ \ Fb^2/EJ$

$L^{Xo}_{GH} = \int_o^b (1/2\,x/b + 1/2\ x^2/b^2)\ Fb\ 1/EJ\ dx - 1\ \ (-1)\ \ (-1)\ \ Fb^2/EJ$

$= [1/4\ x^2/b + 1/6\ x^3/b^2\ ]_o^b\ Fb\ 1/EJ\ \ - 1\ \ (-1)\ \ (-1)\ \ Fb^2/EJ$

$= (1/4\ b + 1/6\ b\ )\ Fb\ 1/EJ\ \ - 1\ \ (-1)\ \ (-1)\ \ Fb^2/EJ = -7/12\ \ Fb^2/EJ$

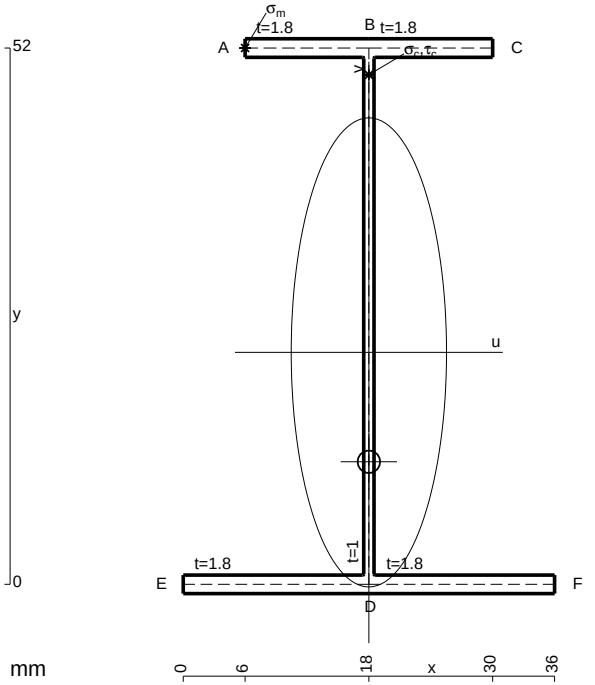

A = 160. mm^2
J_u = 82754. mm^4
J_v = 9072. mm^4
J_t = 134. mm^4
y_o = -10.6 mm
y_g = 22.49 mm
N = 297. N
T_y = -297. N
M_x = 588000. Nmm
x_m = 6. mm
y_m = 52. mm
u_m = -12. mm
v_m = 29.51 mm
$\sigma_m = N/A - Mv/J_u$ = -207.8 N/mm^2
x_c = 18. mm
y_c = 52. mm
v_c = 29.51 mm
$\sigma_c = N/A - Mv/J_u$ = -207.8 N/mm^2
$\tau_c = TS^*/tJ_u$ = 4.575 N/mm^2
$\tau_g = TS^*/tJ_u$ = 4.575 N/mm^2
t_c = 840. mm
$\sigma_o = \sqrt{\sigma^2 + 3\tau^2}$ = 208. N/mm^2

ESΣ05.xxxx.096

@ Adolfo Zavelani Rossi, Politecnico di Milano, vers.27.03.13 01.12.25

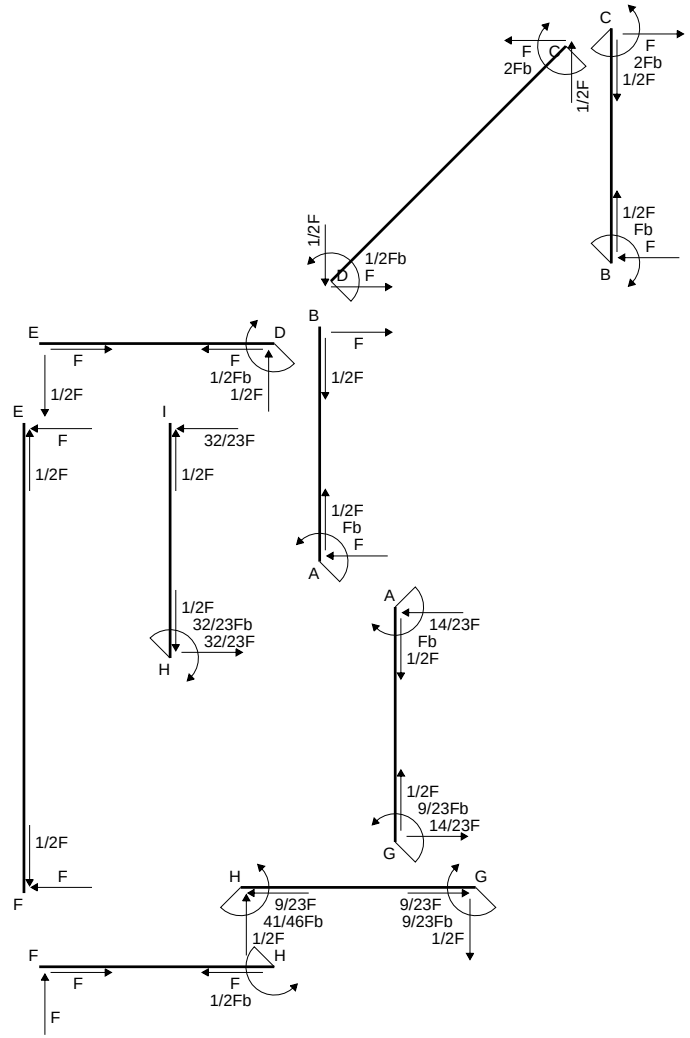
C
F
2Fb
1/2F
F
2Fb
1/2F
1/2F
1/2F
Fb
F
B
1/2F
D
F
E
F
D
F
1/2Fb
1/2F
B
F
1/2F
E
F
1/2F
I
32/23F
1/2F
1/2F
Fb
F
A
1/2F
32/23Fb
32/23F
H
A
14/23F
Fb
1/2F
1/2F
9/23Fb
14/23F
G
1/2F
F
F
H
9/23F
41/46Fb
1/2F
H
9/23F
9/23Fb
1/2F
G
F
F
F
1/2Fb
F

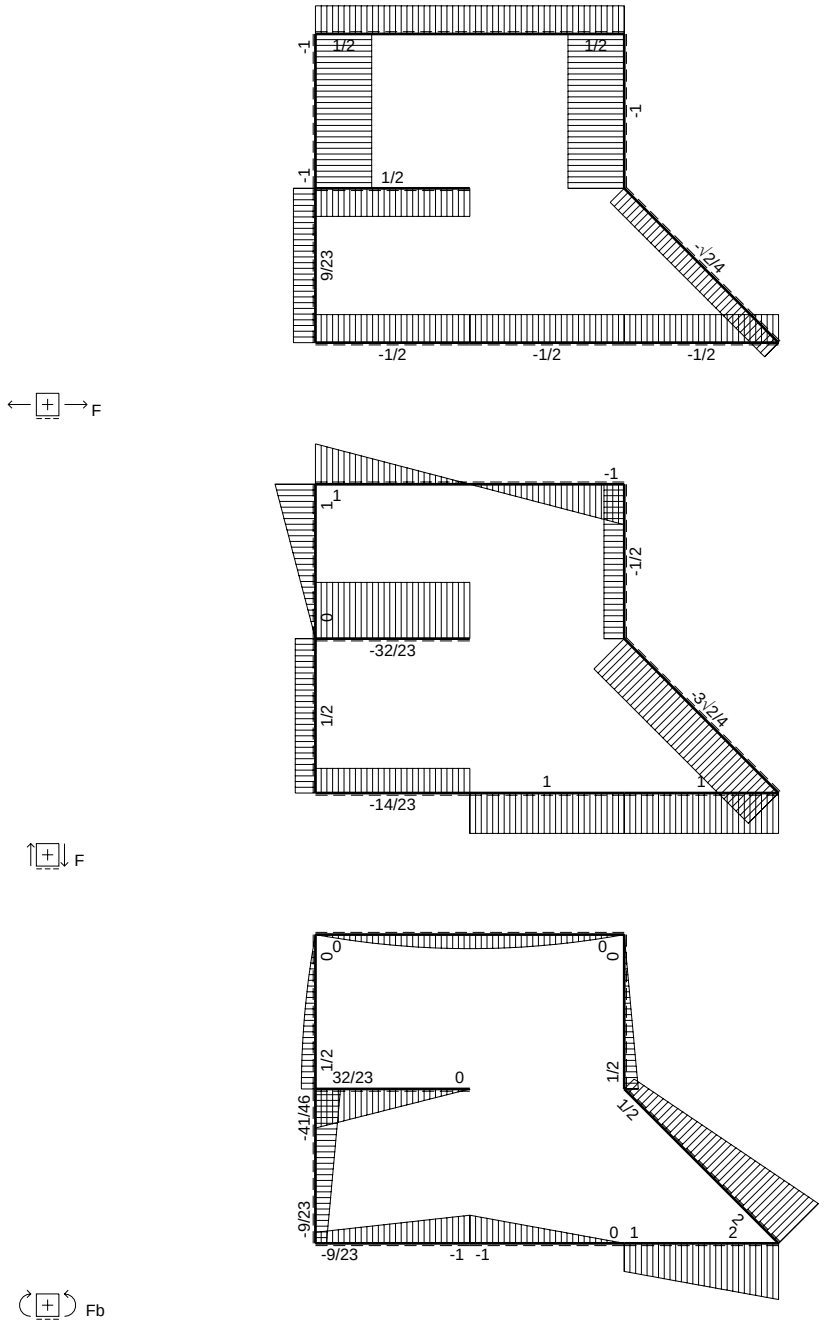
-1
1/2
1/2
-1
-1
1/2
9/23
-1/2
-1/2
-1/2
-1/2
F
-1
1
1
-1/2
0
-32/23
1/2
-3/4
1
1
-14/23
F
0
0
0
0
1/2
32/23
0
1/2
1/2
-41/46
-9/23
0
1
2
-9/23
-1
-1
Fb

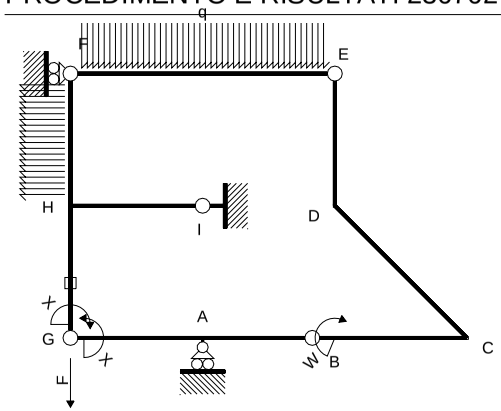

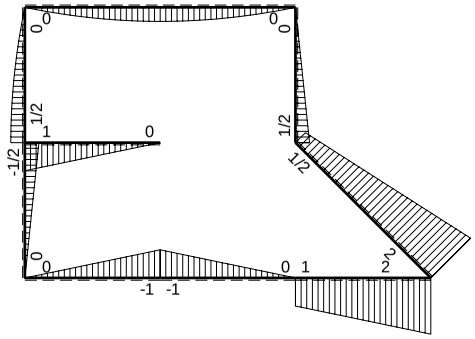

M_0 flessione da carichi assegnati

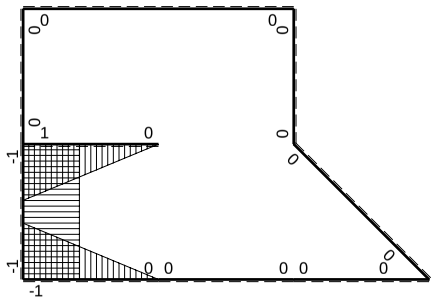

M_x flessione da iperstatica X=1

Quadro contributi PLV per iperstatica $X=W_{GA}$

→	$M_x(x)$	$M_o(x)$	M_xM_o	M_xM_x	$\int M_xM_o/EJdx$	$\int XM_xM_x/EJdx$
AB b	0	-Fb+Fx	0	0	0	0
BA b	0	Fx	0	0		
BC b	0	Fb+Fx	0	0	0	0
CB b	0	-2Fb+Fx	0	0		
CD √2b	0	2Fb-3√2/4Fx	0	0	0	0
DE b	0	1/2Fb-1/2Fx	0	0	0	0
ED b	0	-1/2Fx	0	0		
EF 2b	0	$-Fx+1/2qx^2$	0	0	0	0
FE 2b	0	$Fx-1/2qx^2$	0	0		
GA b	-1+x/b	-Fx	$Fx-Fx^2/b$	$1-2x/b+x^2/b^2$	$1/6Fb^2/EJ$	1/3Xb/EJ
AG b	x/b	Fb-Fx	$Fx-Fx^2/b$	x^2/b^2		
FH b	0	$Fx-1/2qx^2$	0	0	0	0
HF b	0	$-1/2Fb+1/2qx^2$	0	0		
HI b	1-x/b	Fb-Fx	$Fb-2Fx+Fx^2/b$	$1-2x/b+x^2/b^2$	$1/3Fb^2/EJ$	1/3Xb/EJ
IH b	-x/b	-Fx	Fx^2/b	x^2/b^2		
HG b	-1	-1/2Fb+1/2Fx	1/2Fb-1/2Fx	1	$1/4Fb^2/EJ$	Xb/EJ
GH b	1	1/2Fx	1/2Fx	1		
HG	elongazione asta $N_{1HG}\varepsilon_{HG}L_{HG}$				$-Fb^2/EJ$	
A	molla nodo $-V_{1A}(V_{0A}+XV_{1A})/k_A$				$-1/2Fb^2/EJ$	1/4Xb/EJ
	totali				$-3/4Fb^2/EJ$	23/12Xb/EJ
	iperstatica $X=W_{GA}$				9/23Fb	

Sviluppi di calcolo iperstatica

$L^{XX}_{GA} = \int_o^b (1 - 2\,x/b + x^2/b^2)\ 1/EJ\ dx = [\,x - x^2/b + 1/3\,x^3/b^2\,]_o^b\ 1/EJ$

$= (\,b - b + 1/3\,b\,)\ 1/EJ\ = 1/3\ b/EJ$

$L^{XX}_{AG} = \int_o^b (\,x^2/b^2\,)\ 1/EJ\ dx = [1/3\,x^3/b^2\,]_o^b\ 1/EJ$

$= (1/3\,b)\ 1/EJ\ = 1/3\ b/EJ$

$L^{XX}_{HI} = \int_o^b (1 - 2\,x/b + x^2/b^2)\ 1/EJ\ dx = [\,x - x^2/b + 1/3\,x^3/b^2\,]_o^b\ 1/EJ$

$= (\,b - b + 1/3\,b\,)\ 1/EJ\ = 1/3\ b/EJ$

$L^{XX}_{IH} = \int_o^b (\,x^2/b^2\,)\ 1/EJ\ dx = [1/3\,x^3/b^2\,]_o^b\ 1/EJ$

$= (1/3\,b)\ 1/EJ\ = 1/3\ b/EJ$

$L^{XX}_{HG} = \int_o^b (1)\ 1/EJ\ dx = [\,x\,]_o^b\ 1/EJ$

$= (\,b\,)\ 1/EJ\ =\ b/EJ$

$L^{XX}_{GH} = \int_o^b (1)\ 1/EJ\ dx = [\,x\,]_o^b\ 1/EJ$

$= (\,b\,)\ 1/EJ\ =\ b/EJ$

$L^{Xo}_{GA} = \int_o^b (\,x/b - x^2/b^2\,)\ Fb\ 1/EJ\ dx = [1/2\,x^2/b - 1/3\,x^3/b^2\,]_o^b\ Fb\ 1/EJ$

$= (1/2\,b - 1/3\,b\,)\ Fb\ 1/EJ\ = 1/6\ Fb^2/EJ$

$L^{Xo}_{AG} = \int_o^b (\,x/b - x^2/b^2\,)\ Fb\ 1/EJ\ dx = [1/2\,x^2/b - 1/3\,x^3/b^2\,]_o^b\ Fb\ 1/EJ$

$= (1/2\,b - 1/3\,b\,)\ Fb\ 1/EJ\ = 1/6\ Fb^2/EJ$

$L^{Xo}_{HI} = \int_o^b (1 - 2\,x/b + x^2/b^2)\ Fb\ 1/EJ\ dx = [\,x - x^2/b + 1/3\,x^3/b^2\,]_o^b\ Fb\ 1/EJ$

$= (\,b - b + 1/3\,b\,)\ Fb\ 1/EJ\ = 1/3\ Fb^2/EJ$

$L^{Xo}_{IH} = \int_o^b (\,x^2/b^2\,)\ Fb\ 1/EJ\ dx = [1/3\,x^3/b^2\,]_o^b\ Fb\ 1/EJ$

$= (1/3\,b)\ Fb\ 1/EJ\ = 1/3\ Fb^2/EJ$

$L^{Xo}_{HG} = \int_o^b (1/2 - 1/2\,x/b)\ Fb\ 1/EJ\ dx - 1\ \ (-1)\ \ (-1)\ \ Fb^2/EJ$

$= [1/2\,x - 1/4\,x^2/b\,]_o^b\ Fb\ 1/EJ\ - 1\ \ (-1)\ \ (-1)\ \ Fb^2/EJ$

$= (1/2\,b - 1/4\,b\,)\ Fb\ 1/EJ\ - 1\ \ (-1)\ \ (-1)\ \ Fb^2/EJ = -3/4\ \ Fb^2/EJ$

$L^{Xo}_{GH} = \int_o^b (1/2\,x/b)\ Fb\ 1/EJ\ dx - 1\ \ (-1)\ \ (-1)\ \ Fb^2/EJ = [1/4\,x^2/b\,]_o^b\ Fb\ 1/EJ\ - 1\ \ (-1)\ \ (-1)\ \ Fb^2/EJ$

$= (1/4\,b)\ Fb\ 1/EJ\ - 1\ \ (-1)\ \ (-1)\ \ Fb^2/EJ = -3/4\ \ Fb^2/EJ$

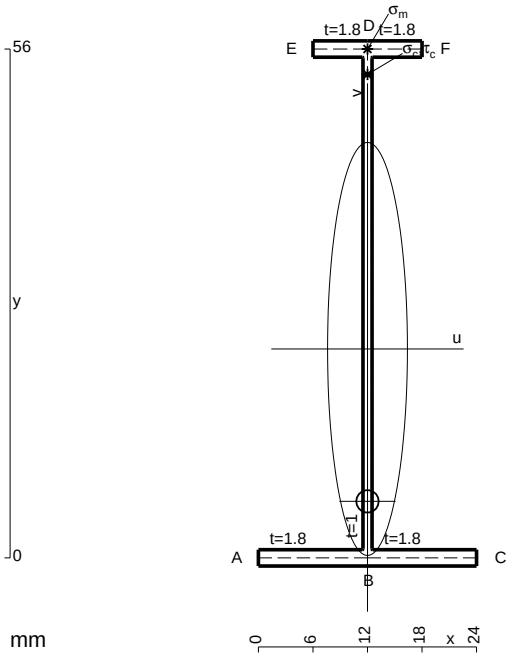

A = 120.8 mm^2
J_u = 62410. mm^4
J_v = 2333. mm^4
J_t = 88.65 mm^4
y_o = -16.77 mm
y_g = 22.99 mm
N = -88.39 N
T_y = -265.2 N
M_x = 405000. Nmm
x_m = 12. mm
y_m = 56. mm
v_m = 33.01 mm
$\sigma_m = N/A - Mv/J_u$ = -214.9 N/mm^2
y_c = 2. mm
u_c = -12. mm
v_c = -20.99 mm
$\sigma_c = N/A - Mv/J_u$ = -214.9 N/mm^2
$\tau_c = TS^*/tJ_u$ = 3.029 N/mm^2
$\tau_g = TS^*/tJ_u$ = 3.029 N/mm^2
t_c = 250. mm
$\sigma_o = \sqrt{\sigma^2 + 3\tau^2}$ = 215. N/mm^2

ESΣ05.xxxx.097

@ Adolfo Zavelani Rossi, Politecnico di Milano, vers.27.03.13 01.12.25

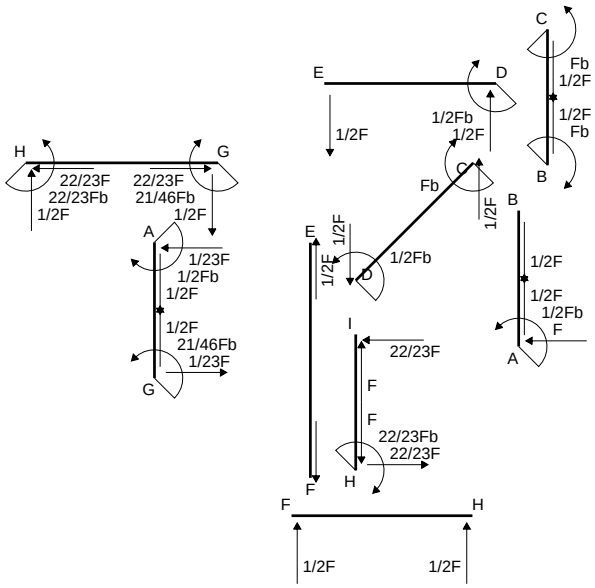
H
G
22/23F
22/23Fb
1/2F
22/23F
21/46Fb
1/2F
A
1/23F
1/2Fb
1/2F
1/2F
21/46Fb
1/23F
G
E
D
1/2F
1/2Fb
1/2F
C
Fb
1/2F
E
1/2F
1/2F
1/2Fb
D
C
1/2F
Fb
B
1/2F
1/2F
1/2Fb
F
A
I
22/23F
F
F
22/23Fb
22/23F
H
F
F
H
1/2F
1/2F
C
Fb
1/2F
1/2F
Fb
B

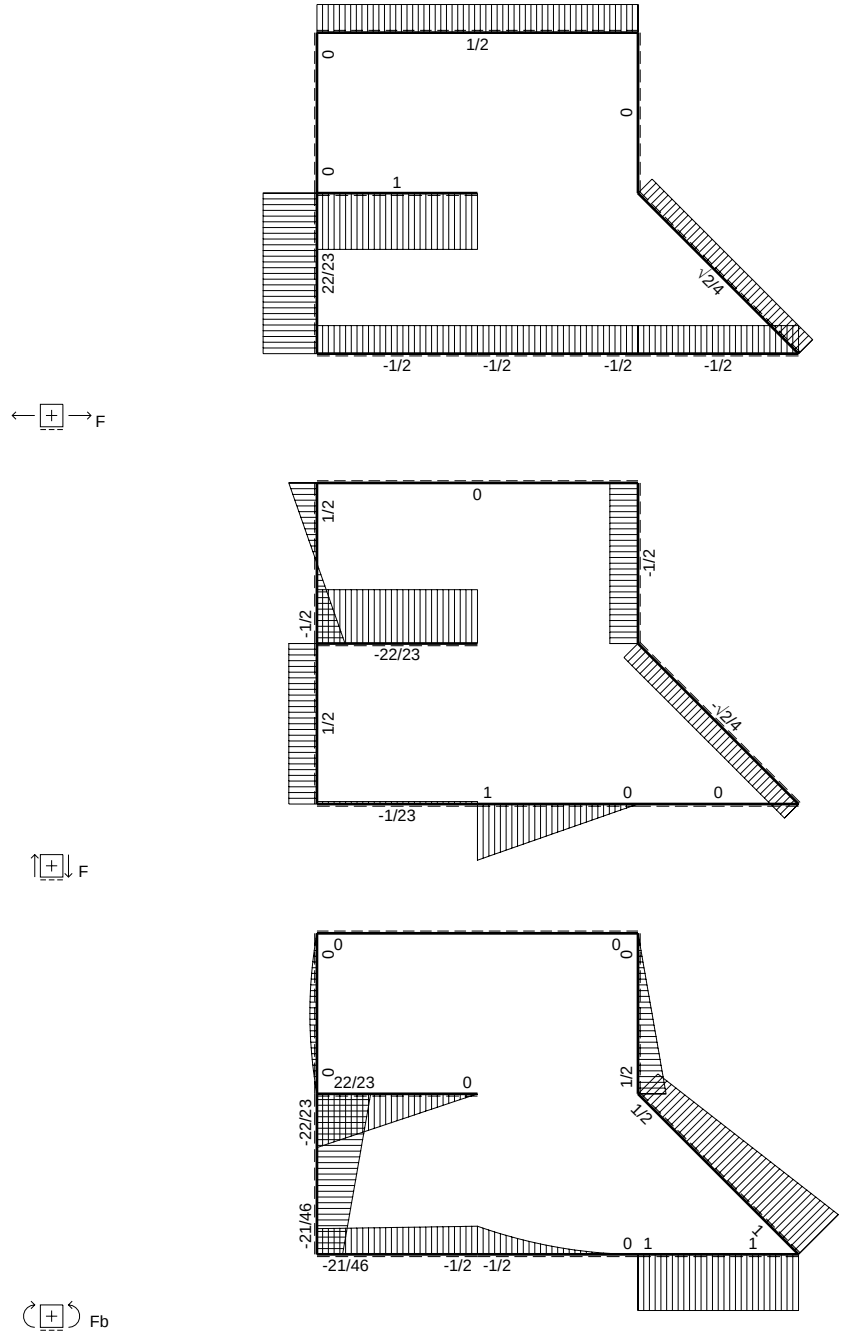
1/2
0
0
0
1
22/23
√2/4
-1/2
-1/2
-1/2
-1/2
F
0
1/2
-1/2
-1/2
-22/23
-√2/4
1/2
1
0
0
-1/23
F
0
0
0
0
22/23
0
1/2
1/2
-22/23
-21/46
0
1
1
-21/46
-1/2
-1/2
Fb

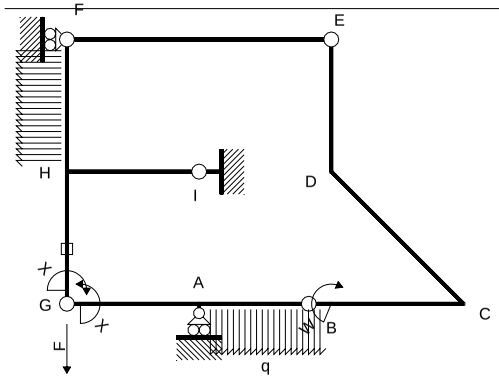

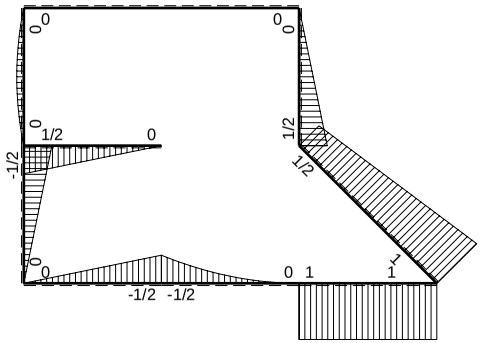

M_0 flessione da carichi assegnati

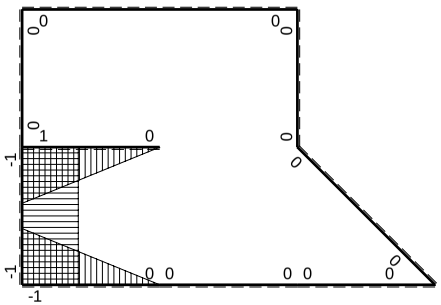

M_x flessione da iperstatica X=1

PROCEDIMENTO E RISULTATI 237222 ESΣ05.xxxx.098

Quadro contributi PLV per iperstatica $X=W_{GA}$

→	$M_x(x)$	$M_o(x)$	M_xM_o	M_xM_x	$\int M_xM_o/EJdx$	$\int XM_xM_x/EJdx$
AB b	0	$-1/2Fb+Fx-1/2qx^2$	0	0	0	0
BA b	0	$1/2qx^2$	0	0		
BC b	0	Fb	0	0	0	0
CB b	0	-Fb	0	0		
CD $\sqrt{2}$b	0	$Fb-\sqrt{2}/4Fx$	0	0	0	0
DE b	0	1/2Fb-1/2Fx	0	0	0	0
ED b	0	-1/2Fx	0	0		
EF 2b	0	0	0	0	0	0
FE 2b	0	0	0	0		
GA b	-1+x/b	-1/2Fx	$1/2Fx-1/2Fx^2/b$	$1-2x/b+x^2/b^2$	$1/12Fb^2/EJ$	1/3Xb/EJ
AG b	x/b	1/2Fb-1/2Fx	$1/2Fx-1/2Fx^2/b$	x^2/b^2		
FH b	0	$1/2Fx-1/2qx^2$	0	0	0	0
HF b	0	$-1/2Fx+1/2qx^2$	0	0		
HI b	1-x/b	1/2Fb-1/2Fx	$1/2Fb-Fx+1/2Fx^2/b$	$1-2x/b+x^2/b^2$	$1/6Fb^2/EJ$	1/3Xb/EJ
IH b	-x/b	-1/2Fx	$1/2Fx^2/b$	x^2/b^2		
HG b	-1	-1/2Fb+1/2Fx	1/2Fb-1/2Fx	1	$1/4Fb^2/EJ$	Xb/EJ
GH b	1	1/2Fx	1/2Fx	1		
HG	elongazione asta $N_{1HG}\varepsilon_{HG}L_{HG}$				$-Fb^2/EJ$	
A	molla nodo $-V_{1A}(V_{0A}+XV_{1A})/k_A$				$-3/8Fb^2/EJ$	1/4Xb/EJ
	totali				$-7/8Fb^2/EJ$	23/12Xb/EJ
	iperstatica $X=W_{GA}$				21/46Fb	

Sviluppi di calcolo iperstatica

@ Adolfo Zavelani Rossi, Politecnico di Milano, vers.27.03.13 01.12.25

$L^{XX}_{GA} = \int_o^b (1 - 2\,x/b + x^2/b^2)\ 1/EJ\ dx = [\,x - x^2/b + 1/3\,x^3/b^2\,]_o^b\ 1/EJ$

$= (\,b - b + 1/3\,b\,)\ 1/EJ = 1/3\ b/EJ$

$L^{XX}_{AG} = \int_o^b (\,x^2/b^2\,)\ 1/EJ\ dx = [1/3\,x^3/b^2\,]_o^b\ 1/EJ$

$= (1/3\,b)\ 1/EJ = 1/3\ b/EJ$

$L^{XX}_{HI} = \int_o^b (1 - 2\,x/b + x^2/b^2)\ 1/EJ\ dx = [\,x - x^2/b + 1/3\,x^3/b^2\,]_o^b\ 1/EJ$

$= (\,b - b + 1/3\,b\,)\ 1/EJ = 1/3\ b/EJ$

$L^{XX}_{IH} = \int_o^b (\,x^2/b^2\,)\ 1/EJ\ dx = [1/3\,x^3/b^2\,]_o^b\ 1/EJ$

$= (1/3\,b)\ 1/EJ = 1/3\ b/EJ$

$L^{XX}_{HG} = \int_o^b (1)\ 1/EJ\ dx = [\,x\,]_o^b\ 1/EJ$

$= (\,b\,)\ 1/EJ = b/EJ$

$L^{XX}_{GH} = \int_o^b (1)\ 1/EJ\ dx = [\,x\,]_o^b\ 1/EJ$

$= (\,b\,)\ 1/EJ = b/EJ$

$L^{Xo}_{GA} = \int_o^b (1/2\,x/b - 1/2\,x^2/b^2)\ Fb\ 1/EJ\ dx = [1/4\,x^2/b - 1/6\,x^3/b^2\,]_o^b\ Fb\ 1/EJ$

$= (1/4\,b - 1/6\,b)\ Fb\ 1/EJ = 1/12\ Fb^2/EJ$

$L^{Xo}_{AG} = \int_o^b (1/2\,x/b - 1/2\,x^2/b^2)\ Fb\ 1/EJ\ dx = [1/4\,x^2/b - 1/6\,x^3/b^2\,]_o^b\ Fb\ 1/EJ$

$= (1/4\,b - 1/6\,b)\ Fb\ 1/EJ = 1/12\ Fb^2/EJ$

$L^{Xo}_{HI} = \int_o^b (1/2 - x/b + 1/2\,x^2/b^2)\ Fb\ 1/EJ\ dx = [1/2\,x - 1/2\,x^2/b + 1/6\,x^3/b^2\,]_o^b\ Fb\ 1/EJ$

$= (1/2\,b - 1/2\,b + 1/6\,b)\ Fb\ 1/EJ = 1/6\ Fb^2/EJ$

$L^{Xo}_{IH} = \int_o^b (1/2\,x^2/b^2)\ Fb\ 1/EJ\ dx = [1/6\,x^3/b^2\,]_o^b\ Fb\ 1/EJ$

$= (1/6\,b)\ Fb\ 1/EJ = 1/6\ Fb^2/EJ$

$L^{Xo}_{HG} = \int_o^b (1/2 - 1/2\,x/b)\ Fb\ 1/EJ\ dx - 1\ \ (-1)\ \ (-1)\ \ Fb^2/EJ$

$= [1/2\,x - 1/4\,x^2/b\,]_o^b\ Fb\ 1/EJ\ - 1\ \ (-1)\ \ (-1)\ \ Fb^2/EJ$

$= (1/2\,b - 1/4\,b)\ Fb\ 1/EJ\ - 1\ \ (-1)\ \ (-1)\ \ Fb^2/EJ = -3/4\ \ Fb^2/EJ$

$L^{Xo}_{GH} = \int_o^b (1/2\,x/b)\ Fb\ 1/EJ\ dx - 1\ \ (-1)\ \ (-1)\ \ Fb^2/EJ = [1/4\,x^2/b\,]_o^b\ Fb\ 1/EJ\ - 1\ \ (-1)\ \ (-1)\ \ Fb^2/EJ$

$= (1/4\,b)\ Fb\ 1/EJ\ - 1\ \ (-1)\ \ (-1)\ \ Fb^2/EJ = -3/4\ \ Fb^2/EJ$

PROCEDIMENTO E RISULTATI 237222 ESΣ05.xxxx.098

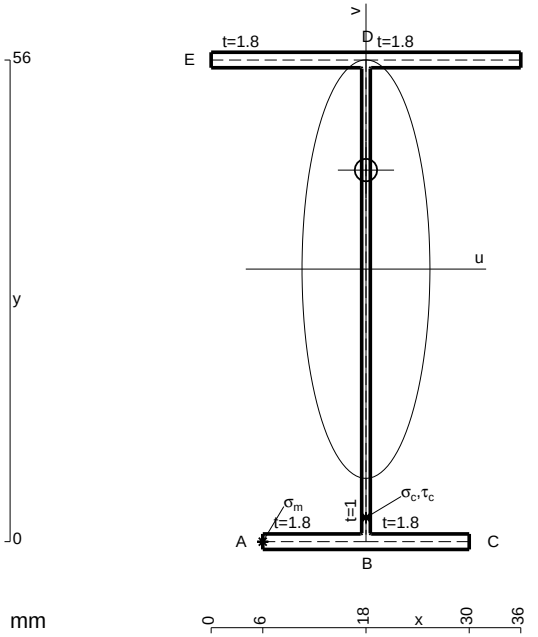

A = 164. mm^2
J_u = 97076. mm^4
J_v = 9072. mm^4
J_t = 135.3 mm^4
y_o = 11.51 mm
y_g = 31.69 mm
N = -800. N
T_y = 1600. N
M_x = -688000. Nmm
x_m = 6. mm
u_m = -12. mm
v_m = -31.69 mm
$\sigma_m = N/A - Mv/J_u$ = -229.5 N/mm^2
x_c = 18. mm
v_c = -31.69 mm
$\sigma_c = N/A - Mv/J_u$ = -229.5 N/mm^2
$\tau_c = TS^*/tJ_u$ = 22.56 N/mm^2
$\tau_g = TS^*/tJ_u$ = 22.56 N/mm^2
t_c = 1600. mm
$\sigma_o = \sqrt{\sigma^2 + 3\tau^2}$ = 232.8 N/mm^2

@ Adolfo Zavelani Rossi, Politecnico di Milano, vers.27.03.13 01.12.25

ESΣ05.xxxx.098

@ Adolfo Zavelani Rossi, Politecnico di Milano, vers.27.03.13 01.12.25

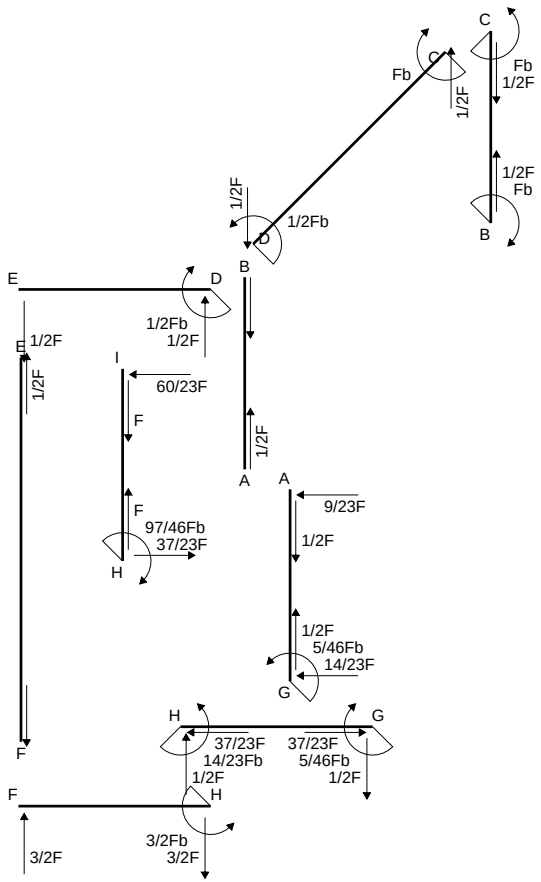
C
Fb
1/2F
C
Fb
1/2F
1/2F
Fb
B
1/2F
1/2Fb
D
B
E
D
1/2Fb
1/2F
E
1/2F
I
60/23F
1/2F
F
A
A
9/23F
F
97/46Fb
37/23F
H
1/2F
1/2F
5/46Fb
14/23F
G
H
G
37/23F
14/23Fb
1/2F
37/23F
5/46Fb
1/2F
F
H
F
3/2Fb
3/2F
3/2F

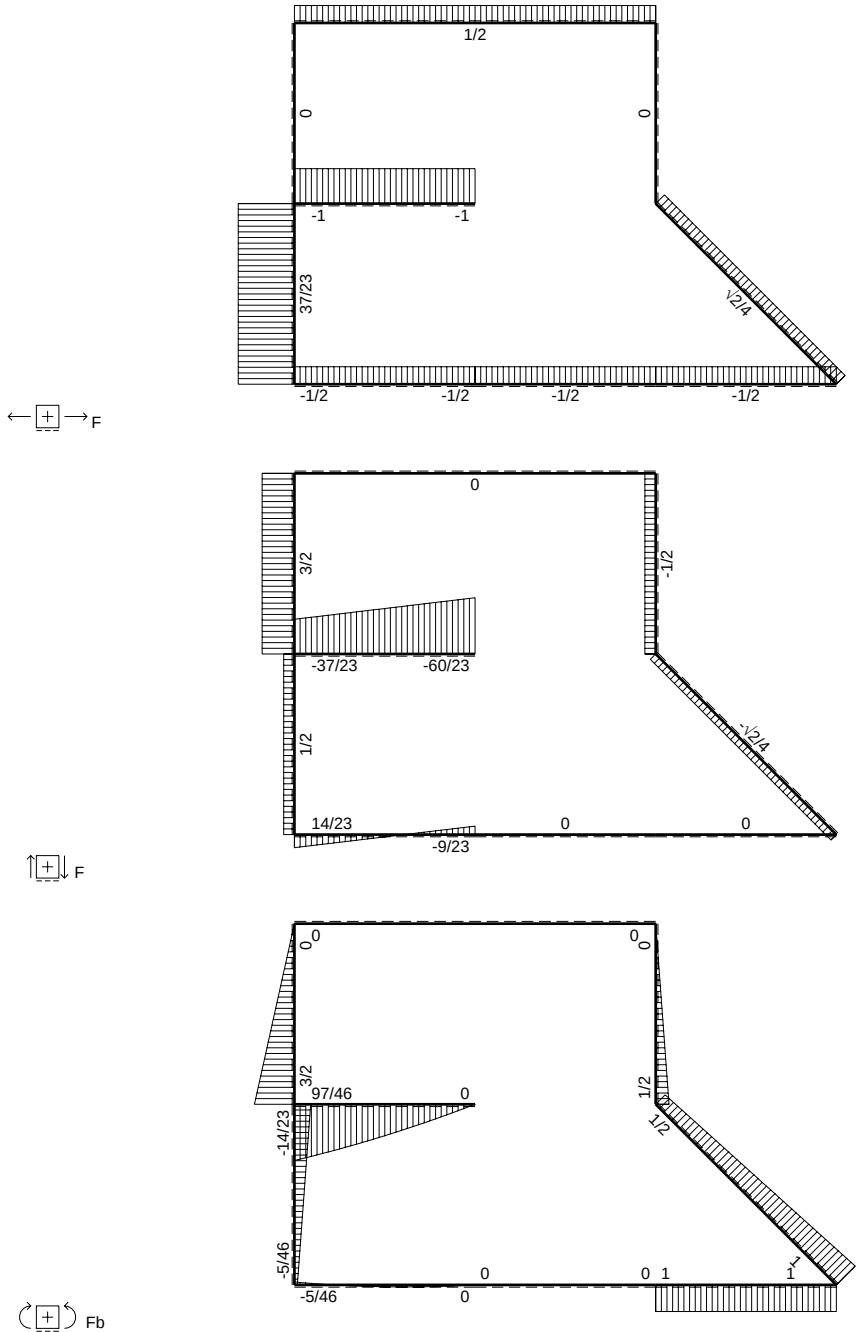
F
1/2
0
0
-1
-1
37/23
√2/4
-1/2
-1/2
-1/2
-1/2
F
0
3/2
-1/2
-37/23
-60/23
1/2
√2/4
14/23
0
0
-9/23
F
0
0
0
0
3/2
97/46
0
1/2
-14/23
1/2
√2/4
-5/46
0
0
1
1
-5/46
0
Fb

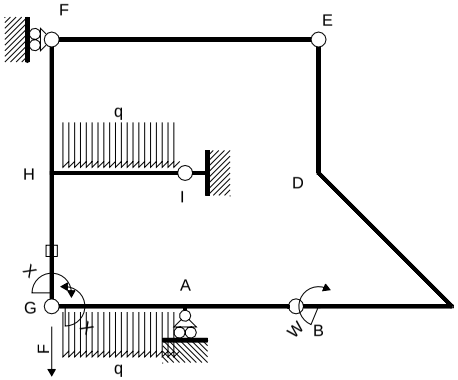

Schema di calcolo iperstatico

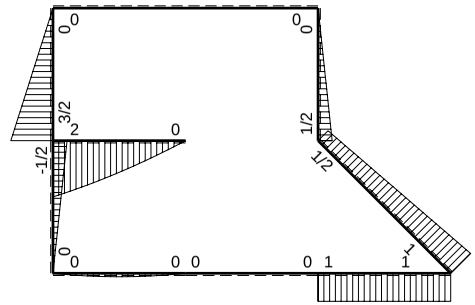

M_0 flessione da carichi assegnati

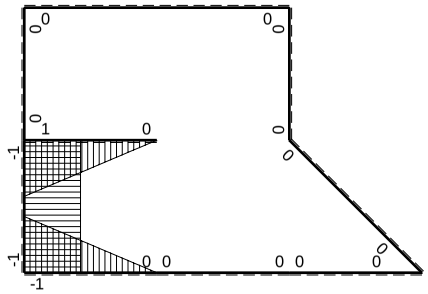

M_x flessione da iperstatica X=1

PROCEDIMENTO E RISULTATI 237996 ESΣ05.xxxx.099

@ Adolfo Zavelani Rossi, Politecnico di Milano, vers.27.03.13 01.12.25

Quadro contributi PLV per iperstatica $X=W_{GA}$

→	$M_x(x)$	$M_o(x)$	M_xM_o	M_xM_x	$\int M_xM_o/EJdx$	$\int XM_xM_x/EJdx$
AB b	0	0	0	0	0	0
BA b	0	0	0	0		
BC b	0	Fb	0	0	0	0
CB b	0	-Fb	0	0		
CD $\sqrt{2}b$	0	$Fb-\sqrt{2}/4Fx$	0	0	0	0
DE b	0	1/2Fb-1/2Fx	0	0	0	0
ED b	0	-1/2Fx	0	0		
EF 2b	0	0	0	0	0	0
FE 2b	0	0	0	0		
GA b	-1+x/b	$1/2Fx-1/2qx^2$	$-1/2Fx+Fx^2/b-1/2qx^3/b$	$1-2x/b+x^2/b^2$	$-1/24Fb^2/EJ$	1/3Xb/EJ
AG b	x/b	$-1/2Fx+1/2qx^2$	$-1/2Fx^2/b+1/2qx^3/b$	x^2/b^2		
FH b	0	3/2Fx	0	0	0	0
HF b	0	-3/2Fb+3/2Fx	0	0		
HI b	1-x/b	$2Fb-3/2Fx-1/2qx^2$	$2Fb-7/2Fx+Fx^2/b+1/2qx^3/b$	$1-2x/b+x^2/b^2$	$17/24Fb^2/EJ$	1/3Xb/EJ
IH b	-x/b	$-5/2Fx+1/2qx^2$	$5/2Fx^2/b-1/2qx^3/b$	x^2/b^2		
HG b	-1	-1/2Fb+1/2Fx	1/2Fb-1/2Fx	1	$1/4Fb^2/EJ$	Xb/EJ
GH b	1	1/2Fx	1/2Fx	1		
HG	elongazione asta $N_{1HG}\varepsilon_{HG}L_{HG}$				$-Fb^2/EJ$	
A	molla nodo $-V_{1A}(V_{oA}+XV_{1A})/k_A$				$-1/8Fb^2/EJ$	1/4Xb/EJ
	totali				$-5/24Fb^2/EJ$	23/12Xb/EJ
	iperstatica $X=W_{GA}$				5/46Fb	

PROCEDIMENTO E RISULTATI 237996 ESΣ05.xxxx.099

Sviluppi di calcolo iperstatica

@ Adolfo Zavelani Rossi, Politecnico di Milano, vers.27.03.13 01.12.25

$L^{XX}_{GA} = \int_o^b (1 - 2\,x/b + x^2/b^2)\ 1/EJ\ dx = [\,x - x^2/b + 1/3\,x^3/b^2\,]_o^b\ 1/EJ$

$= (\,b - b + 1/3\,b\,)\ 1/EJ\ = 1/3\ b/EJ$

$L^{XX}_{AG} = \int_o^b (\,x^2/b^2\,)\ 1/EJ\ dx = [1/3\,x^3/b^2\,]_o^b\ 1/EJ$

$= (1/3\,b\,)\ 1/EJ\ = 1/3\ b/EJ$

$L^{XX}_{HI} = \int_o^b (1 - 2\,x/b + x^2/b^2)\ 1/EJ\ dx = [\,x - x^2/b + 1/3\,x^3/b^2\,]_o^b\ 1/EJ$

$= (\,b - b + 1/3\,b\,)\ 1/EJ\ = 1/3\ b/EJ$

$L^{XX}_{IH} = \int_o^b (\,x^2/b^2\,)\ 1/EJ\ dx = [1/3\,x^3/b^2\,]_o^b\ 1/EJ$

$= (1/3\,b\,)\ 1/EJ\ = 1/3\ b/EJ$

$L^{XX}_{HG} = \int_o^b (1)\ 1/EJ\ dx = [\,x\,]_o^b\ 1/EJ$

$= (\,b\,)\ 1/EJ\ = b/EJ$

$L^{XX}_{GH} = \int_o^b (1)\ 1/EJ\ dx = [\,x\,]_o^b\ 1/EJ$

$= (\,b\,)\ 1/EJ\ = b/EJ$

$L^{Xo}_{GA} = \int_o^b (-1/2\,x/b + x^2/b^2 - 1/2\,x^3/b^3)\ Fb\ 1/EJ\ dx = [-1/4\,x^2/b + 1/3\,x^3/b^2 - 1/8\,x^4/b^3\,]_o^b\ Fb\ 1/EJ$

$= (-1/4\,b + 1/3\,b - 1/8\,b\,)\ Fb\ 1/EJ\ = -1/24\ Fb^2/EJ$

$L^{Xo}_{AG} = \int_o^b (-1/2\,x^2/b^2 + 1/2\,x^3/b^3)\ Fb\ 1/EJ\ dx = [-1/6\,x^3/b^2 + 1/8\,x^4/b^3\,]_o^b\ Fb\ 1/EJ$

$= (-1/6\,b + 1/8\,b\,)\ Fb\ 1/EJ\ = -1/24\ Fb^2/EJ$

$L^{Xo}_{HI} = \int_o^b (2 - 7/2\,x/b + x^2/b^2 + 1/2\,x^3/b^3)\ Fb\ 1/EJ\ dx = [2\,x - 7/4\,x^2/b + 1/3\,x^3/b^2 + 1/8\,x^4/b^3\,]_o^b\ Fb\ 1/EJ$

$= (2\,b - 7/4\,b + 1/3\,b + 1/8\,b\,)\ Fb\ 1/EJ\ = 17/24\ Fb^2/EJ$

$L^{Xo}_{IH} = \int_o^b (5/2\,x^2/b^2 - 1/2\,x^3/b^3)\ Fb\ 1/EJ\ dx = [5/6\,x^3/b^2 - 1/8\,x^4/b^3\,]_o^b\ Fb\ 1/EJ$

$= (5/6\,b - 1/8\,b\,)\ Fb\ 1/EJ\ = 17/24\ Fb^2/EJ$

$L^{Xo}_{HG} = \int_o^b (1/2 - 1/2\,x/b\,)\ Fb\ 1/EJ\ dx - 1\ \ (-1)\ \ (-1)\ \ Fb^2/EJ$

$= [1/2\,x - 1/4\,x^2/b\,]_o^b\ Fb\ 1/EJ\ - 1\ \ (-1)\ \ (-1)\ \ Fb^2/EJ$

$= (1/2\,b - 1/4\,b\,)\ Fb\ 1/EJ\ - 1\ \ (-1)\ \ (-1)\ \ Fb^2/EJ = -3/4\ \ Fb^2/EJ$

$L^{Xo}_{GH} = \int_o^b (1/2\,x/b\,)\ Fb\ 1/EJ\ dx - 1\ \ (-1)\ \ (-1)\ \ Fb^2/EJ = [1/4\,x^2/b\,]_o^b\ Fb\ 1/EJ\ - 1\ \ (-1)\ \ (-1)\ \ Fb^2/EJ$

$= (1/4\,b\,)\ Fb\ 1/EJ\ - 1\ \ (-1)\ \ (-1)\ \ Fb^2/EJ = -3/4\ \ Fb^2/EJ$

PROCEDIMENTO E RISULTATI 237996 ESΣ05.xxxx.099

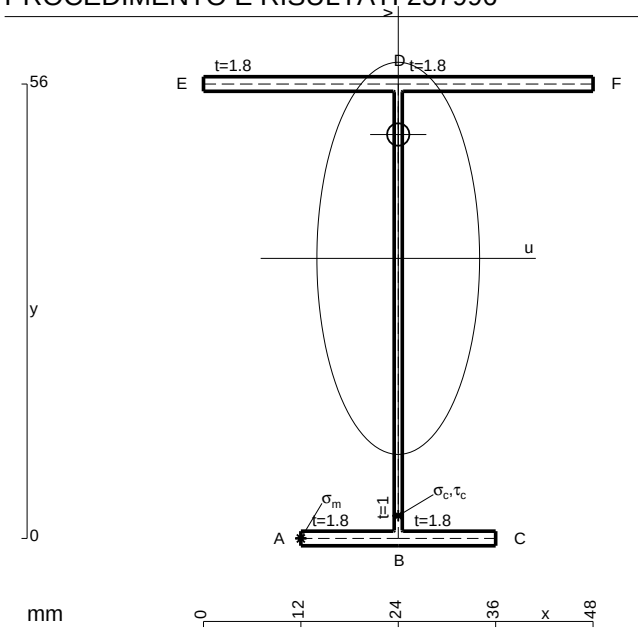

A = 185.6 mm^2
J_u = 108358. mm^4
J_v = 18662. mm^4
J_t = 158.6 mm^4
y_o = 15.26 mm
y_g = 34.52 mm
T_y = 825. N
M_x = 750750. Nmm
x_m = 12. mm
u_m = -12. mm
v_m = -34.52 mm
$\sigma_m = -Mv/J_u$ = 239.1 N/mm^2
x_c = 24. mm
v_c = -34.52 mm
$\sigma_c = -Mv/J_u$ = 239.1 N/mm^2
$\tau_c = TS^*/tJ_u$ = 11.35 N/mm^2
$\tau_g = TS^*/tJ_u$ = 11.35 N/mm^2
t_c = 550. mm
$\sigma_o = \sqrt{\sigma^2 + 3\tau^2}$ = 240. N/mm^2

@ Adolfo Zavelani Rossi, Politecnico di Milano, vers.27.03.13 01.12.25

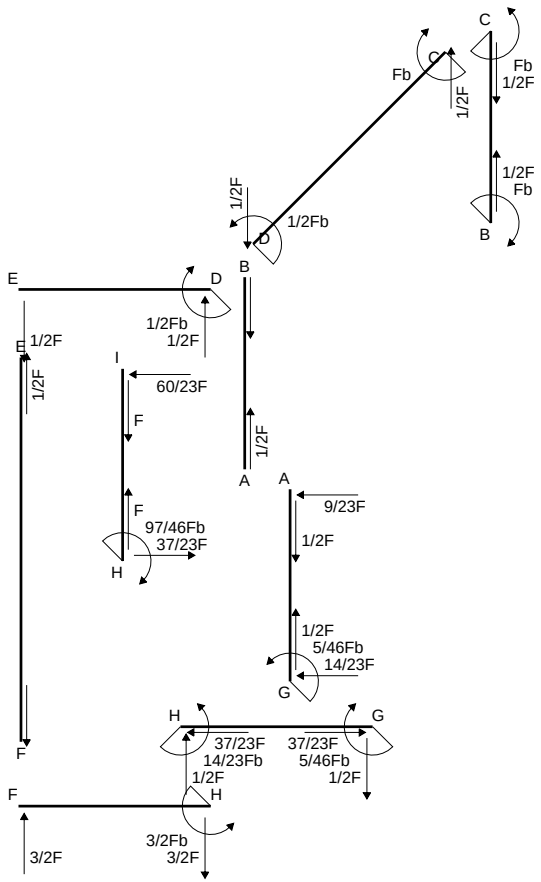
C
Fb
1/2F
C
Fb
1/2F
1/2F
Fb
B
1/2F
1/2Fb
D
B
E
D
1/2Fb
1/2F
E
1/2F
I
60/23F
1/2F
F
A
A
9/23F
F
97/46Fb
37/23F
H
1/2F
1/2F
5/46Fb
14/23F
G
H
G
37/23F
14/23Fb
1/2F
37/23F
5/46Fb
1/2F
F
H
3/2Fb
3/2F
F
3/2F

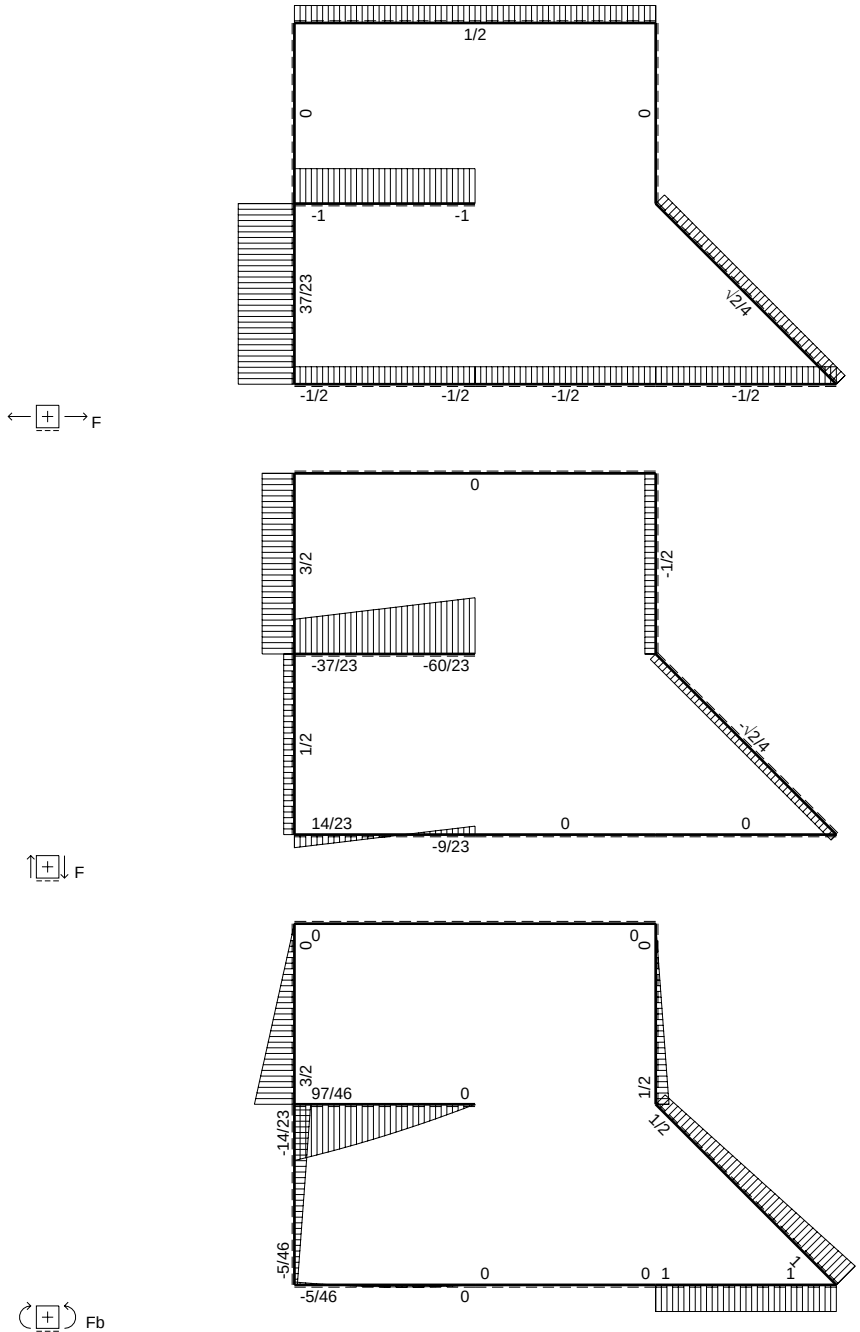
F
1/2
0
0
-1
-1
37/23
√2/4
-1/2
-1/2
-1/2
-1/2
F
0
3/2
-1/2
-37/23
-60/23
1/2
√2/4
14/23
0
0
-9/23
F
0
0
0
0
3/2
97/46
0
-14/23
1/2
1/2
√2/4
-5/46
0
0
1
1
-5/46
0
Fb

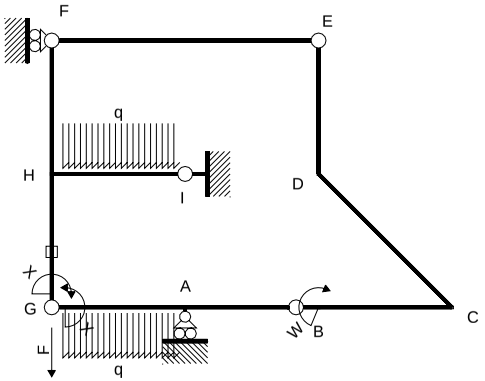

Schema di calcolo iperstatico

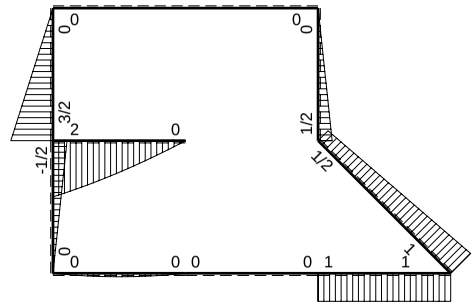

M_0 flessione da carichi assegnati

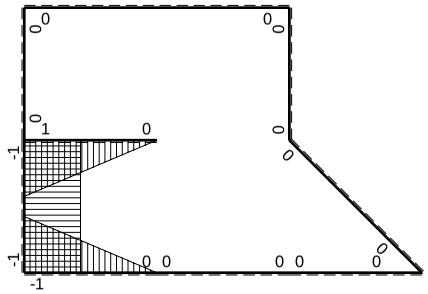

M_x flessione da iperstatica X=1

PROCEDIMENTO E RISULTATI 982088 ESΣ05.xxxx.100

@ Adolfo Zavelani Rossi, Politecnico di Milano, vers.27.03.13 01.12.25

Quadro contributi PLV per iperstatica $X=W_{GA}$

→	$M_x(x)$	$M_o(x)$	M_xM_o	M_xM_x	$\int M_xM_o/EJdx$	$\int XM_xM_x/EJdx$
AB b	0	0	0	0	0	0
BA b	0	0	0	0		
BC b	0	Fb	0	0	0	0
CB b	0	-Fb	0	0		
CD $\sqrt{2}b$	0	$Fb-\sqrt{2}/4Fx$	0	0	0	0
DE b	0	1/2Fb-1/2Fx	0	0	0	0
ED b	0	-1/2Fx	0	0		
EF 2b	0	0	0	0	0	0
FE 2b	0	0	0	0		
GA b	$-1+x/b$	$1/2Fx-1/2qx^2$	$-1/2Fx+Fx^2/b-1/2qx^3/b$	$1-2x/b+x^2/b^2$	$-1/24Fb^2/EJ$	1/3Xb/EJ
AG b	x/b	$-1/2Fx+1/2qx^2$	$-1/2Fx^2/b+1/2qx^3/b$	x^2/b^2		
FH b	0	3/2Fx	0	0	0	0
HF b	0	-3/2Fb+3/2Fx	0	0		
HI b	1-x/b	$2Fb-3/2Fx-1/2qx^2$	$2Fb-7/2Fx+Fx^2/b+1/2qx^3/b$	$1-2x/b+x^2/b^2$	$17/24Fb^2/EJ$	1/3Xb/EJ
IH b	-x/b	$-5/2Fx+1/2qx^2$	$5/2Fx^2/b-1/2qx^3/b$	x^2/b^2		
HG b	-1	-1/2Fb+1/2Fx	1/2Fb-1/2Fx	1	$1/4Fb^2/EJ$	Xb/EJ
GH b	1	1/2Fx	1/2Fx	1		
HG	elongazione asta $N_{1HG}\varepsilon_{HG}L_{HG}$				$-Fb^2/EJ$	
A	molla nodo $-V_{1A}(V_{oA}+XV_{1A})/k_A$				$-1/8Fb^2/EJ$	1/4Xb/EJ
	totali				$-5/24Fb^2/EJ$	23/12Xb/EJ
	iperstatica $X=W_{GA}$				5/46Fb	

PROCEDIMENTO E RISULTATI 982088 ESΣ05.xxxx.100

Sviluppi di calcolo iperstatica

@ Adolfo Zavelani Rossi, Politecnico di Milano, vers.27.03.13 01.12.25

$L^{XX}_{GA} = \int_o^b (1 - 2\,x/b + x^2/b^2)\ 1/EJ\ dx = [\,x - x^2/b + 1/3\,x^3/b^2\,]_o^b\ 1/EJ$

$= (\,b - b + 1/3\,b\,)\ 1/EJ\ = 1/3\ b/EJ$

$L^{XX}_{AG} = \int_o^b (\,x^2/b^2\,)\ 1/EJ\ dx = [1/3\,x^3/b^2\,]_o^b\ 1/EJ$

$= (1/3\,b\,)\ 1/EJ\ = 1/3\ b/EJ$

$L^{XX}_{HI} = \int_o^b (1 - 2\,x/b + x^2/b^2)\ 1/EJ\ dx = [\,x - x^2/b + 1/3\,x^3/b^2\,]_o^b\ 1/EJ$

$= (\,b - b + 1/3\,b\,)\ 1/EJ\ = 1/3\ b/EJ$

$L^{XX}_{IH} = \int_o^b (\,x^2/b^2\,)\ 1/EJ\ dx = [1/3\,x^3/b^2\,]_o^b\ 1/EJ$

$= (1/3\,b\,)\ 1/EJ\ = 1/3\ b/EJ$

$L^{XX}_{HG} = \int_o^b (1)\ 1/EJ\ dx = [\,x\,]_o^b\ 1/EJ$

$= (\,b\,)\ 1/EJ\ = b/EJ$

$L^{XX}_{GH} = \int_o^b (1)\ 1/EJ\ dx = [\,x\,]_o^b\ 1/EJ$

$= (\,b\,)\ 1/EJ\ = b/EJ$

$L^{Xo}_{GA} = \int_o^b (-1/2\,x/b + x^2/b^2 - 1/2\,x^3/b^3)\ Fb\ 1/EJ\ dx = [-1/4\,x^2/b + 1/3\,x^3/b^2 - 1/8\,x^4/b^3\,]_o^b\ Fb\ 1/EJ$

$= (-1/4\,b + 1/3\,b - 1/8\,b\,)\ Fb\ 1/EJ\ = -1/24\ Fb^2/EJ$

$L^{Xo}_{AG} = \int_o^b (-1/2\,x^2/b^2 + 1/2\,x^3/b^3)\ Fb\ 1/EJ\ dx = [-1/6\,x^3/b^2 + 1/8\,x^4/b^3\,]_o^b\ Fb\ 1/EJ$

$= (-1/6\,b + 1/8\,b\,)\ Fb\ 1/EJ\ = -1/24\ Fb^2/EJ$

$L^{Xo}_{HI} = \int_o^b (2 - 7/2\,x/b + x^2/b^2 + 1/2\,x^3/b^3)\ Fb\ 1/EJ\ dx = [2\,x - 7/4\,x^2/b + 1/3\,x^3/b^2 + 1/8\,x^4/b^3\,]_o^b\ Fb\ 1/EJ$

$= (2\,b - 7/4\,b + 1/3\,b + 1/8\,b\,)\ Fb\ 1/EJ\ = 17/24\ Fb^2/EJ$

$L^{Xo}_{IH} = \int_o^b (5/2\,x^2/b^2 - 1/2\,x^3/b^3)\ Fb\ 1/EJ\ dx = [5/6\,x^3/b^2 - 1/8\,x^4/b^3\,]_o^b\ Fb\ 1/EJ$

$= (5/6\,b - 1/8\,b\,)\ Fb\ 1/EJ\ = 17/24\ Fb^2/EJ$

$L^{Xo}_{HG} = \int_o^b (1/2 - 1/2\,x/b\,)\ Fb\ 1/EJ\ dx - 1\ \ (-1)\ \ (-1)\ \ Fb^2/EJ$

$= [1/2\,x - 1/4\,x^2/b\,]_o^b\ Fb\ 1/EJ\ - 1\ \ (-1)\ \ (-1)\ \ Fb^2/EJ$

$= (1/2\,b - 1/4\,b\,)\ Fb\ 1/EJ\ - 1\ \ (-1)\ \ (-1)\ \ Fb^2/EJ = -3/4\ \ Fb^2/EJ$

$L^{Xo}_{GH} = \int_o^b (1/2\,x/b\,)\ Fb\ 1/EJ\ dx - 1\ \ (-1)\ \ (-1)\ \ Fb^2/EJ = [1/4\,x^2/b\,]_o^b\ Fb\ 1/EJ\ - 1\ \ (-1)\ \ (-1)\ \ Fb^2/EJ$

$= (1/4\,b\,)\ Fb\ 1/EJ\ - 1\ \ (-1)\ \ (-1)\ \ Fb^2/EJ = -3/4\ \ Fb^2/EJ$

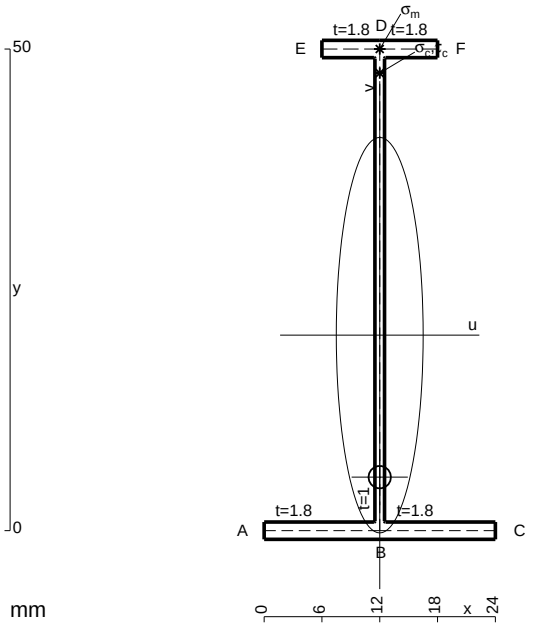

A = 114.8 mm^2
J_u = 48377. mm^4
J_v = 2333. mm^4
J_t = 86.65 mm^4
y_o = -14.74 mm
y_g = 20.3 mm
T_y = 750. N
M_x = 322500. Nmm
x_m = 12. mm
y_m = 50. mm
v_m = 29.7 mm
$\sigma_m = -Mv/J_u$ = -198. N/mm^2
y_c = 2. mm
u_c = -12. mm
v_c = -18.3 mm
$\sigma_c = -Mv/J_u$ = -198. N/mm^2
$\tau_c = TS^*/tJ_u$ = 9.947 N/mm^2
$\tau_g = TS^*/tJ_u$ = 9.947 N/mm^2
t_c = 500. mm
$\sigma_o = \sqrt{\sigma^2 + 3\tau^2}$ = 198.8 N/mm^2

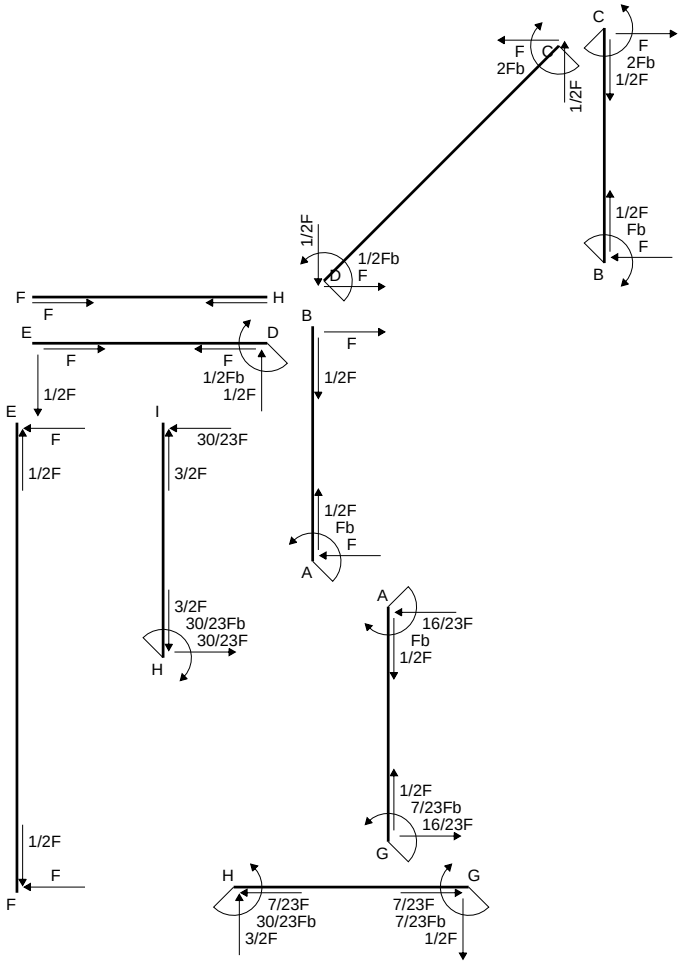
C
F
2Fb
1/2F
F
2Fb
1/2F
1/2F
1/2F
Fb
F
B
1/2F
1/2Fb
F
D
F
H
F
E
F
D
F
1/2Fb
1/2F
B
F
1/2F
E
F
1/2F
I
30/23F
3/2F
1/2F
Fb
F
A
3/2F
30/23Fb
30/23F
H
A
16/23F
Fb
1/2F
1/2F
7/23Fb
16/23F
G
1/2F
F
F
H
7/23F
30/23Fb
3/2F
7/23F
7/23Fb
1/2F
G

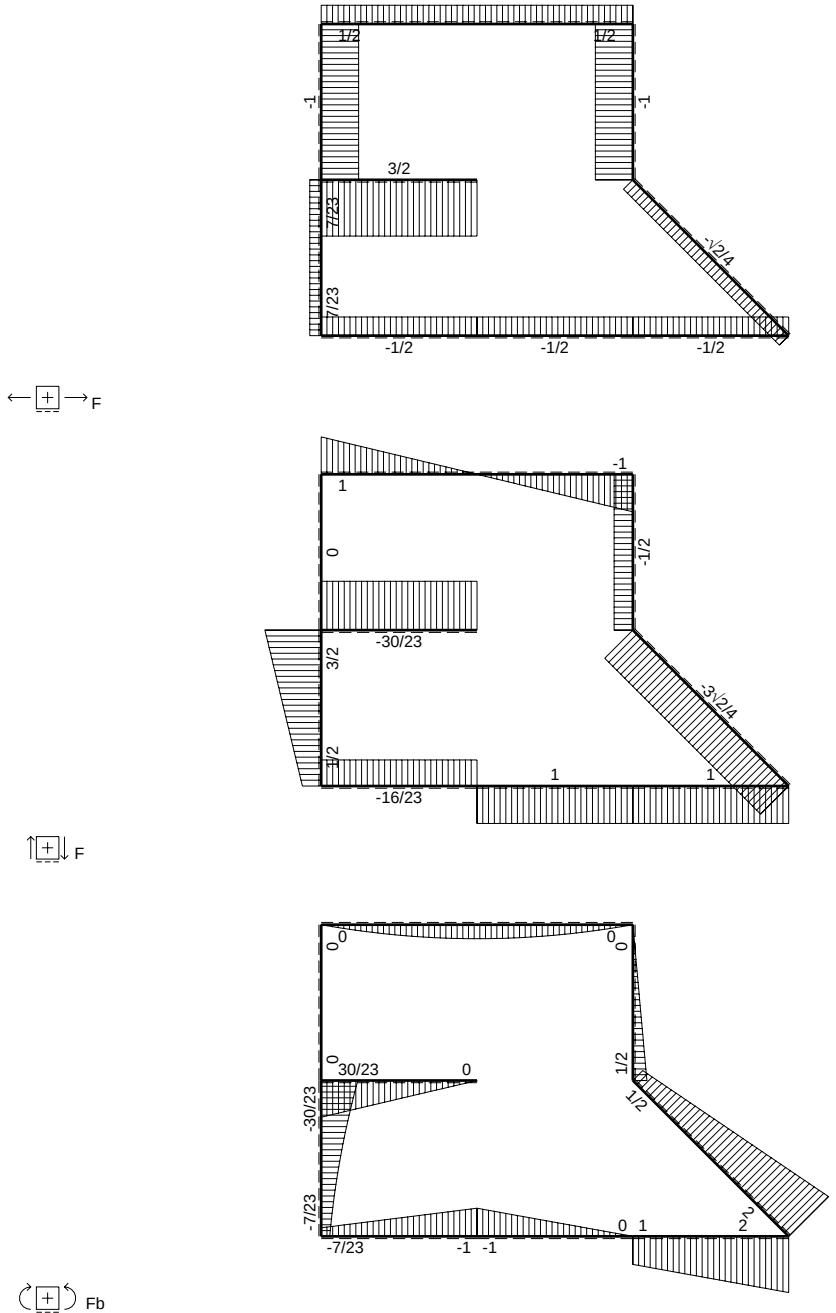
F
1/2
1/2
-1
-1
3/2
7/23
-√2/4
7/23
-1/2
-1/2
-1/2
F
-1
1
0
-1/2
-30/23
3/2
-3√2/4
1/2
1
1
-16/23
F
0
0
0
0
0
30/23
0
1/2
1/2
-30/23
-7/23
√2
0
1
2
-7/23
-1
-1
Fb

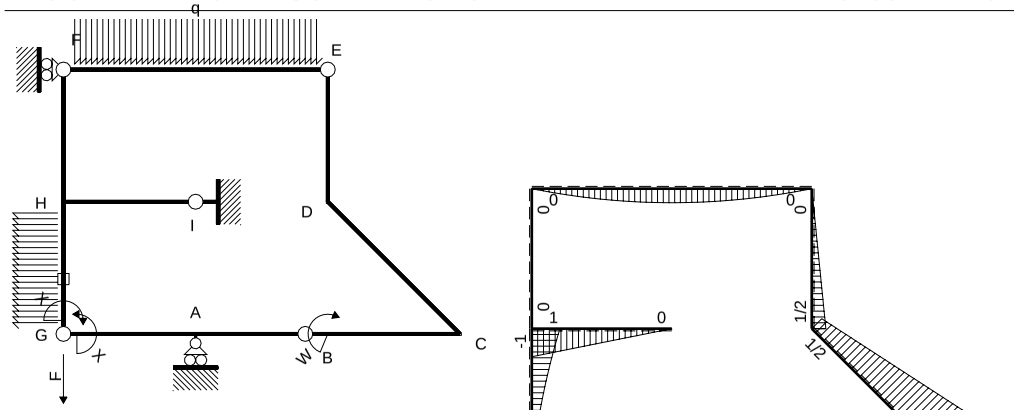

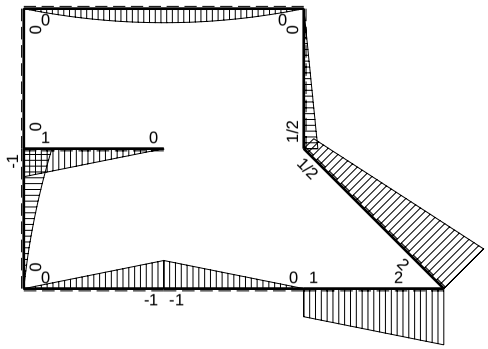

M_0 flessione da carichi assegnati

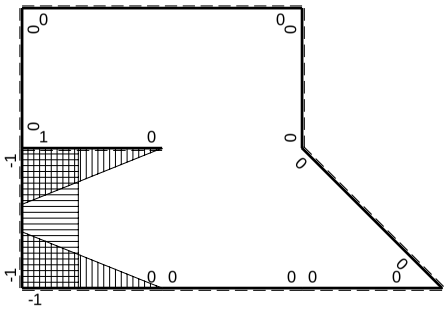

M_x flessione da iperstatica X=1

Quadro contributi PLV per iperstatica $X=W_{GA}$

→	$M_x(x)$	$M_o(x)$	M_xM_o	M_xM_x	$\int M_xM_o/EJdx$	$\int XM_xM_x/EJdx$
AB b	0	-Fb+Fx	0	0	0	0
BA b	0	Fx	0	0		
BC b	0	Fb+Fx	0	0	0	0
CB b	0	-2Fb+Fx	0	0		
CD √2b	0	2Fb-3√2/4Fx	0	0	0	0
DE b	0	1/2Fb-1/2Fx	0	0	0	0
ED b	0	-1/2Fx	0	0		
EF 2b	0	$-Fx+1/2qx^2$	0	0	0	0
FE 2b	0	$Fx-1/2qx^2$	0	0		
GA b	-1+x/b	-Fx	$Fx-Fx^2/b$	$1-2x/b+x^2/b^2$	$1/6Fb^2/EJ$	1/3Xb/EJ
AG b	x/b	Fb-Fx	$Fx-Fx^2/b$	x^2/b^2		
FH b	0	0	0	0	0	0
HF b	0	0	0	0		
HI b	1-x/b	Fb-Fx	$Fb-2Fx+Fx^2/b$	$1-2x/b+x^2/b^2$	$1/3Fb^2/EJ$	1/3Xb/EJ
IH b	-x/b	-Fx	Fx^2/b	x^2/b^2		
HG b	-1	$-Fb+3/2Fx-1/2qx^2$	$Fb-3/2Fx+1/2Fx^2/b$	1	$5/12Fb^2/EJ$	Xb/EJ
GH b	1	$1/2Fx+1/2qx^2$	$1/2Fx+1/2Fx^2/b$	1		
HG	elongazione asta $N_{1HG}\varepsilon_{HG}L_{HG}$				$-Fb^2/EJ$	
A	molla nodo $-V_{1A}(V_{0A}+XV_{1A})/k_A$				$-1/2Fb^2/EJ$	1/4Xb/EJ
	totali				$-7/12Fb^2/EJ$	23/12Xb/EJ
	iperstatica $X=W_{GA}$				7/23Fb	

Sviluppi di calcolo iperstatica

$L^{XX}_{GA} = \int_o^b (1 - 2\,x/b + x^2/b^2)\ 1/EJ\ dx = [\ x - x^2/b + 1/3\ x^3/b^2\ ]_o^b\ 1/EJ$

$= (\ b - b + 1/3\ b\ )\ 1/EJ\ = 1/3\ b/EJ$

$L^{XX}_{AG} = \int_o^b (\ x^2/b^2\ )\ 1/EJ\ dx = [1/3\ x^3/b^2\ ]_o^b\ 1/EJ$

$= (1/3\ b\ )\ 1/EJ\ = 1/3\ b/EJ$

$L^{XX}_{HI} = \int_o^b (1 - 2\,x/b + x^2/b^2)\ 1/EJ\ dx = [\ x - x^2/b + 1/3\ x^3/b^2\ ]_o^b\ 1/EJ$

$= (\ b - b + 1/3\ b\ )\ 1/EJ\ = 1/3\ b/EJ$

$L^{XX}_{IH} = \int_o^b (\ x^2/b^2\ )\ 1/EJ\ dx = [1/3\ x^3/b^2\ ]_o^b\ 1/EJ$

$= (1/3\ b\ )\ 1/EJ\ = 1/3\ b/EJ$

$L^{XX}_{HG} = \int_o^b (1)\ 1/EJ\ dx = [\ x\ ]_o^b\ 1/EJ$

$= (\ b\ )\ 1/EJ\ =\ b/EJ$

$L^{XX}_{GH} = \int_o^b (1)\ 1/EJ\ dx = [\ x\ ]_o^b\ 1/EJ$

$= (\ b\ )\ 1/EJ\ =\ b/EJ$

$L^{Xo}_{GA} = \int_o^b (\ x/b - x^2/b^2\ )\ Fb\ 1/EJ\ dx = [1/2\ x^2/b - 1/3\ x^3/b^2\ ]_o^b\ Fb\ 1/EJ$

$= (1/2\ b - 1/3\ b\ )\ Fb\ 1/EJ\ = 1/6\ \ Fb^2/EJ$

$L^{Xo}_{AG} = \int_o^b (\ x/b - x^2/b^2\ )\ Fb\ 1/EJ\ dx = [1/2\ x^2/b - 1/3\ x^3/b^2\ ]_o^b\ Fb\ 1/EJ$

$= (1/2\ b - 1/3\ b\ )\ Fb\ 1/EJ\ = 1/6\ \ Fb^2/EJ$

$L^{Xo}_{HI} = \int_o^b (1 - 2\,x/b + x^2/b^2)\ Fb\ 1/EJ\ dx = [\ x - x^2/b + 1/3\ x^3/b^2\ ]_o^b\ Fb\ 1/EJ$

$= (\ b - b + 1/3\ b\ )\ Fb\ 1/EJ\ = 1/3\ \ Fb^2/EJ$

$L^{Xo}_{IH} = \int_o^b (\ x^2/b^2\ )\ Fb\ 1/EJ\ dx = [1/3\ x^3/b^2\ ]_o^b\ Fb\ 1/EJ$

$= (1/3\ b\ )\ Fb\ 1/EJ\ = 1/3\ \ Fb^2/EJ$

$L^{Xo}_{HG} = \int_o^b (1 - 3/2\ x/b + 1/2\ x^2/b^2)\ Fb\ 1/EJ\ dx - 1\ \ (-1)\ \ (-1)\ \ Fb^2/EJ$

$= [\ x - 3/4\ x^2/b + 1/6\ x^3/b^2\ ]_o^b\ Fb\ 1/EJ\ - 1\ \ (-1)\ \ (-1)\ \ Fb^2/EJ$

$= (\ b - 3/4\ b + 1/6\ b\ )\ Fb\ 1/EJ\ - 1\ \ (-1)\ \ (-1)\ \ Fb^2/EJ = -7/12\ \ Fb^2/EJ$

$L^{Xo}_{GH} = \int_o^b (1/2\ x/b + 1/2\ x^2/b^2)\ Fb\ 1/EJ\ dx - 1\ \ (-1)\ \ (-1)\ \ Fb^2/EJ$

$= [1/4\ x^2/b + 1/6\ x^3/b^2\ ]_o^b\ Fb\ 1/EJ\ - 1\ \ (-1)\ \ (-1)\ \ Fb^2/EJ$

$= (1/4\ b + 1/6\ b\ )\ Fb\ 1/EJ\ - 1\ \ (-1)\ \ (-1)\ \ Fb^2/EJ = -7/12\ \ Fb^2/EJ$

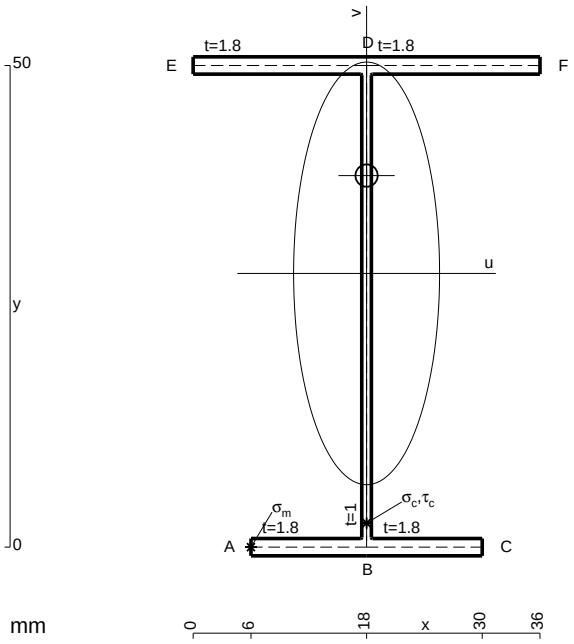

A = 158. mm^2
J_u = 76071. mm^4
J_v = 9072. mm^4
J_t = 133.3 mm^4
y_o = 10.15 mm
y_g = 28.42 mm
N = -212.1 N
T_y = -636.4 N
M_x = 564000. Nmm
x_m = 6. mm
u_m = -12. mm
v_m = -28.42 mm
$\sigma_m = N/A - Mv/J_u$ = 209.4 N/mm^2
x_c = 18. mm
v_c = -28.42 mm
$\sigma_c = N/A - Mv/J_u$ = 209.4 N/mm^2
$\tau_c = TS^*/tJ_u$ = 10.27 N/mm^2
$\tau_g = TS^*/tJ_u$ = 10.27 N/mm^2
t_c = 600. mm
$\sigma_o = \sqrt{\sigma^2 + 3\tau^2}$ = 210.1 N/mm^2

ESΣ05.xxxx.101

@ Adolfo Zavelani Rossi, Politecnico di Milano, vers.27.03.13 01.12.25

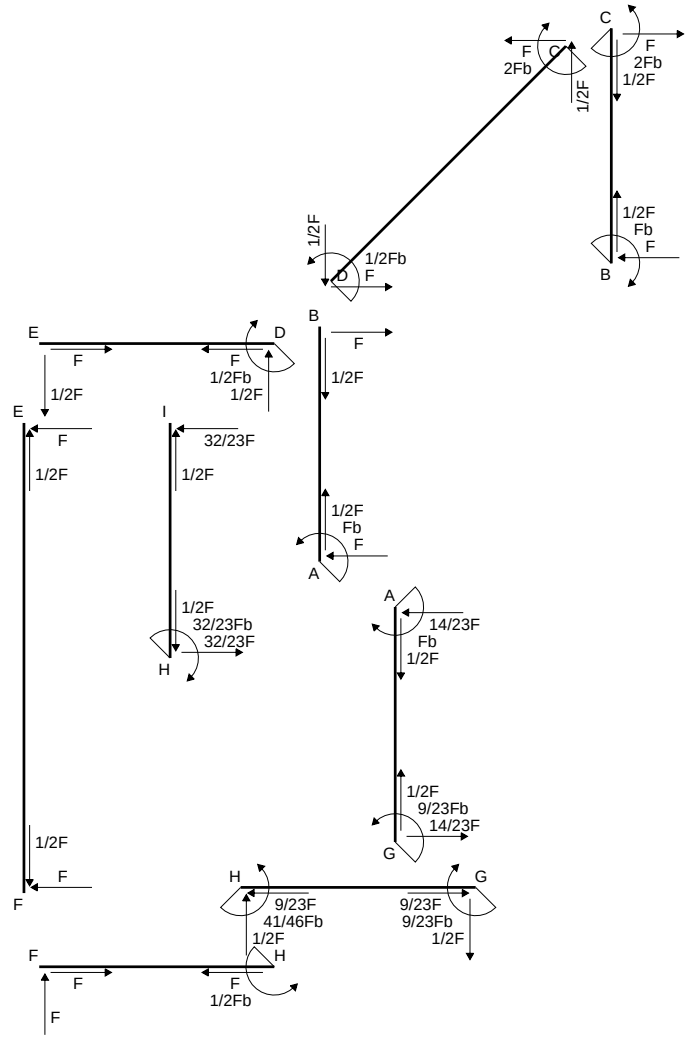
C
F
2Fb
1/2F
F
2Fb
1/2F
1/2F
1/2F
Fb
F
B
1/2F
1/2Fb
F
D
E
F
F
1/2Fb
1/2F
B
F
1/2F
E
F
1/2F
I
32/23F
1/2F
1/2F
Fb
F
A
1/2F
32/23Fb
32/23F
H
A
14/23F
Fb
1/2F
1/2F
9/23Fb
14/23F
G
1/2F
F
F
H
9/23F
41/46Fb
1/2F
H
9/23F
9/23Fb
1/2F
G
F
F
F
1/2Fb
F

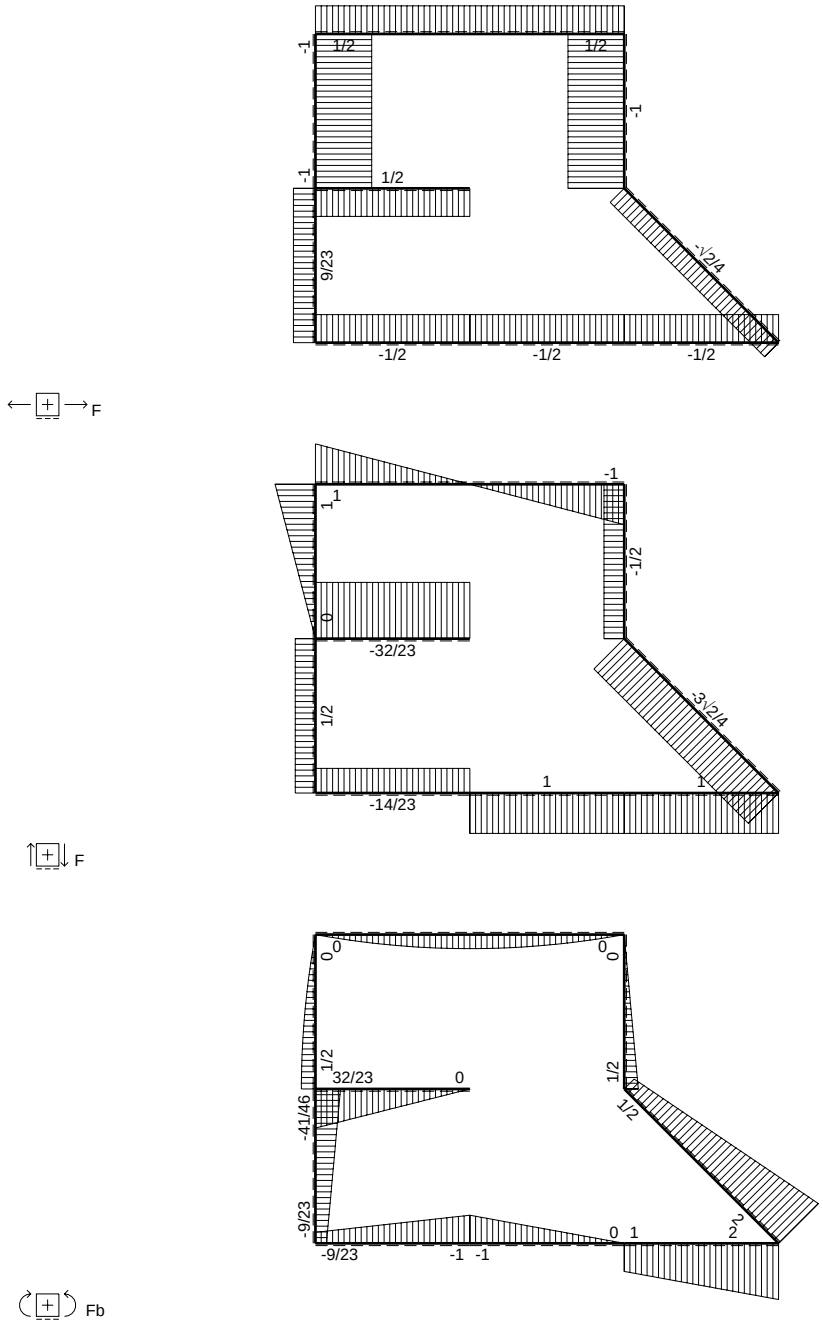
-1
1/2
1/2
-1
-1
1/2
9/23
-1/2
-1/2
-1/2
-1/2
F
-1
1
1
-1/2
0
-32/23
1/2
-3/4
1
1
-14/23
F
0
0
0
0
1/2
32/23
0
1/2
1/2
-41/46
-9/23
0
1
2
-9/23
-1
-1
Fb

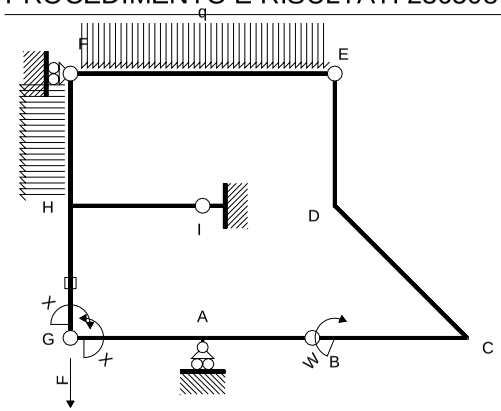

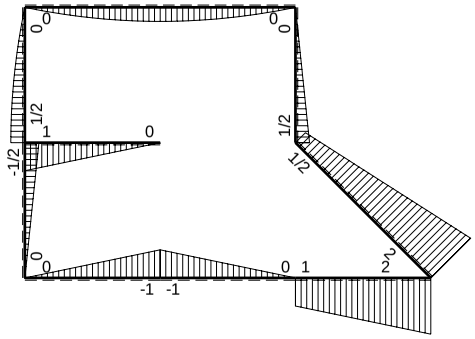

M_0 flessione da carichi assegnati

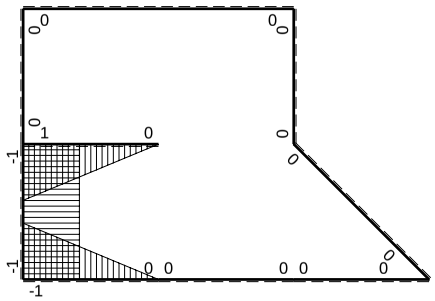

M_x flessione da iperstatica X=1

Quadro contributi PLV per iperstatica $X=W_{GA}$

→	$M_x(x)$	$M_o(x)$	M_xM_o	M_xM_x	$\int M_xM_o/EJdx$	$\int XM_xM_x/EJdx$
AB b	0	-Fb+Fx	0	0	0	0
BA b	0	Fx	0	0		
BC b	0	Fb+Fx	0	0	0	0
CB b	0	-2Fb+Fx	0	0		
CD √2b	0	2Fb-3√2/4Fx	0	0	0	0
DE b	0	1/2Fb-1/2Fx	0	0	0	0
ED b	0	-1/2Fx	0	0		
EF 2b	0	$-Fx+1/2qx^2$	0	0	0	0
FE 2b	0	$Fx-1/2qx^2$	0	0		
GA b	-1+x/b	-Fx	$Fx-Fx^2/b$	$1-2x/b+x^2/b^2$	$1/6Fb^2/EJ$	1/3Xb/EJ
AG b	x/b	Fb-Fx	$Fx-Fx^2/b$	x^2/b^2		
FH b	0	$Fx-1/2qx^2$	0	0	0	0
HF b	0	$-1/2Fb+1/2qx^2$	0	0		
HI b	1-x/b	Fb-Fx	$Fb-2Fx+Fx^2/b$	$1-2x/b+x^2/b^2$	$1/3Fb^2/EJ$	1/3Xb/EJ
IH b	-x/b	-Fx	Fx^2/b	x^2/b^2		
HG b	-1	-1/2Fb+1/2Fx	1/2Fb-1/2Fx	1	$1/4Fb^2/EJ$	Xb/EJ
GH b	1	1/2Fx	1/2Fx	1		
HG	elongazione asta $N_{1HG}\varepsilon_{HG}L_{HG}$				$-Fb^2/EJ$	
A	molla nodo $-V_{1A}(V_{0A}+XV_{1A})/k_A$				$-1/2Fb^2/EJ$	1/4Xb/EJ
	totali				$-3/4Fb^2/EJ$	23/12Xb/EJ
	iperstatica $X=W_{GA}$				9/23Fb	

Sviluppi di calcolo iperstatica

$L^{XX}_{GA} = \int_o^b (1 - 2\,x/b + x^2/b^2)\ 1/EJ\ dx = [\,x - x^2/b + 1/3\,x^3/b^2\,]_o^b\ 1/EJ$

$= (\,b - b + 1/3\,b\,)\ 1/EJ = 1/3\ b/EJ$

$L^{XX}_{AG} = \int_o^b (\,x^2/b^2\,)\ 1/EJ\ dx = [1/3\,x^3/b^2\,]_o^b\ 1/EJ$

$= (1/3\,b\,)\ 1/EJ = 1/3\ b/EJ$

$L^{XX}_{HI} = \int_o^b (1 - 2\,x/b + x^2/b^2)\ 1/EJ\ dx = [\,x - x^2/b + 1/3\,x^3/b^2\,]_o^b\ 1/EJ$

$= (\,b - b + 1/3\,b\,)\ 1/EJ = 1/3\ b/EJ$

$L^{XX}_{IH} = \int_o^b (\,x^2/b^2\,)\ 1/EJ\ dx = [1/3\,x^3/b^2\,]_o^b\ 1/EJ$

$= (1/3\,b\,)\ 1/EJ = 1/3\ b/EJ$

$L^{XX}_{HG} = \int_o^b (1)\ 1/EJ\ dx = [\,x\,]_o^b\ 1/EJ$

$= (\,b\,)\ 1/EJ = b/EJ$

$L^{XX}_{GH} = \int_o^b (1)\ 1/EJ\ dx = [\,x\,]_o^b\ 1/EJ$

$= (\,b\,)\ 1/EJ = b/EJ$

$L^{Xo}_{GA} = \int_o^b (\,x/b - x^2/b^2\,)\ Fb\ 1/EJ\ dx = [1/2\,x^2/b - 1/3\,x^3/b^2\,]_o^b\ Fb\ 1/EJ$

$= (1/2\,b - 1/3\,b\,)\ Fb\ 1/EJ = 1/6\ Fb^2/EJ$

$L^{Xo}_{AG} = \int_o^b (\,x/b - x^2/b^2\,)\ Fb\ 1/EJ\ dx = [1/2\,x^2/b - 1/3\,x^3/b^2\,]_o^b\ Fb\ 1/EJ$

$= (1/2\,b - 1/3\,b\,)\ Fb\ 1/EJ = 1/6\ Fb^2/EJ$

$L^{Xo}_{HI} = \int_o^b (1 - 2\,x/b + x^2/b^2)\ Fb\ 1/EJ\ dx = [\,x - x^2/b + 1/3\,x^3/b^2\,]_o^b\ Fb\ 1/EJ$

$= (\,b - b + 1/3\,b\,)\ Fb\ 1/EJ = 1/3\ Fb^2/EJ$

$L^{Xo}_{IH} = \int_o^b (\,x^2/b^2\,)\ Fb\ 1/EJ\ dx = [1/3\,x^3/b^2\,]_o^b\ Fb\ 1/EJ$

$= (1/3\,b\,)\ Fb\ 1/EJ = 1/3\ Fb^2/EJ$

$L^{Xo}_{HG} = \int_o^b (1/2 - 1/2\,x/b)\ Fb\ 1/EJ\ dx - 1\ \ (-1)\ \ (-1)\ \ Fb^2/EJ$

$= [1/2\,x - 1/4\,x^2/b\,]_o^b\ Fb\ 1/EJ\ -\ 1\ \ (-1)\ \ (-1)\ \ Fb^2/EJ$

$= (1/2\,b - 1/4\,b\,)\ Fb\ 1/EJ\ -\ 1\ \ (-1)\ \ (-1)\ \ Fb^2/EJ = -3/4\ \ Fb^2/EJ$

$L^{Xo}_{GH} = \int_o^b (1/2\,x/b\,)\ Fb\ 1/EJ\ dx - 1\ \ (-1)\ \ (-1)\ \ Fb^2/EJ = [1/4\,x^2/b\,]_o^b\ Fb\ 1/EJ\ -\ 1\ \ (-1)\ \ (-1)\ \ Fb^2/EJ$

$= (1/4\,b\,)\ Fb\ 1/EJ\ -\ 1\ \ (-1)\ \ (-1)\ \ Fb^2/EJ = -3/4\ \ Fb^2/EJ$

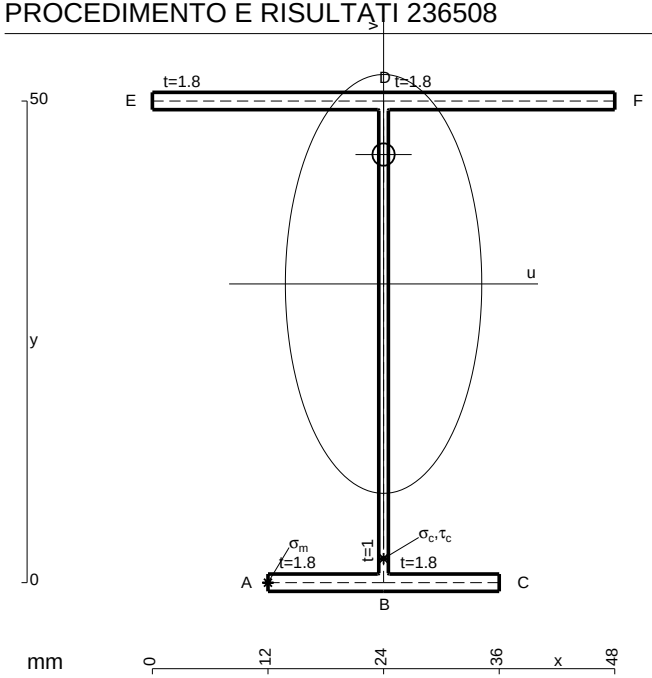

A = 179.6 mm^2
J_u = 84922. mm^4
J_v = 18662. mm^4
J_t = 156.6 mm^4
y_o = 13.43 mm
y_g = 31.01 mm
N = -208.6 N
T_y = -625.8 N
M_x = 601800. Nmm
x_m = 12. mm
u_m = -12. mm
v_m = -31.01 mm
$\sigma_m = N/A - Mv/J_u$ = 218.6 N/mm^2
x_c = 24. mm
v_c = -31.01 mm
$\sigma_c = N/A - Mv/J_u$ = 218.6 N/mm^2
$\tau_c = TS^*/tJ_u$ = 9.873 N/mm^2
$\tau_g = TS^*/tJ_u$ = 9.873 N/mm^2
t_c = 590. mm
$\sigma_o = \sqrt{\sigma^2 + 3\tau^2}$ = 219.3 N/mm^2

ESΣ05.xxxx.102

@ Adolfo Zavelani Rossi, Politecnico di Milano, vers.27.03.13 01.12.25

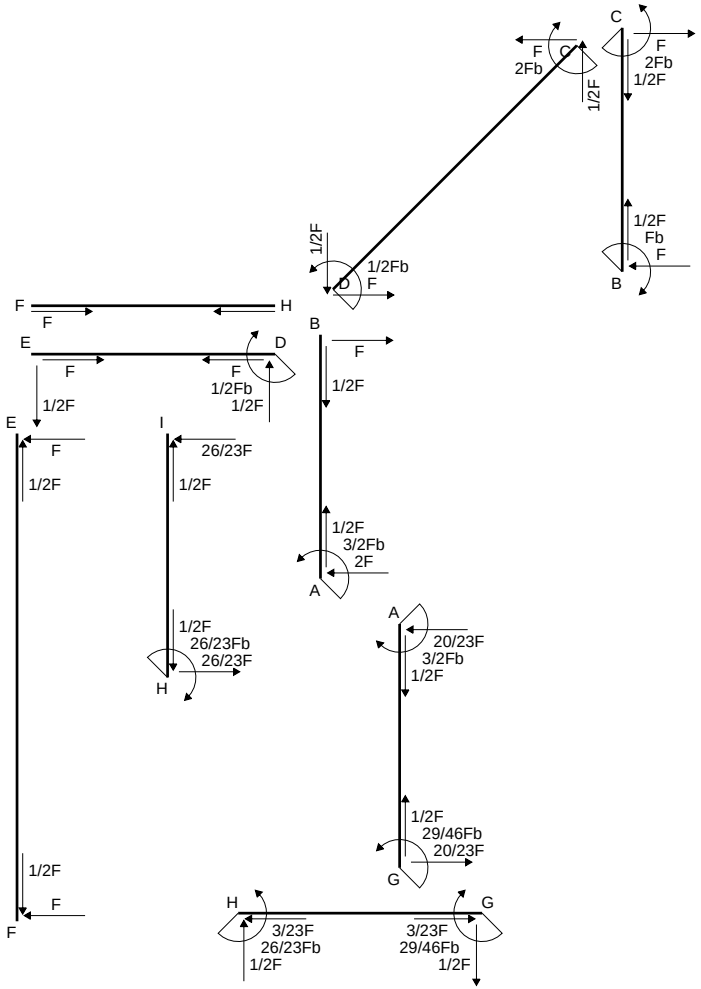
C
F
2Fb
1/2F
F
2Fb
1/2F
F
C
1/2F
1/2F
Fb
F
B
1/2Fb
F
D
F
H
F
E
D
F
F
1/2Fb
1/2F
1/2F
B
F
1/2F
E
F
1/2F
I
26/23F
1/2F
1/2F
3/2Fb
2F
A
1/2F
26/23Fb
26/23F
H
A
20/23F
3/2Fb
1/2F
1/2F
29/46Fb
20/23F
G
1/2F
F
F
H
G
3/23F
26/23Fb
1/2F
3/23F
29/46Fb
1/2F

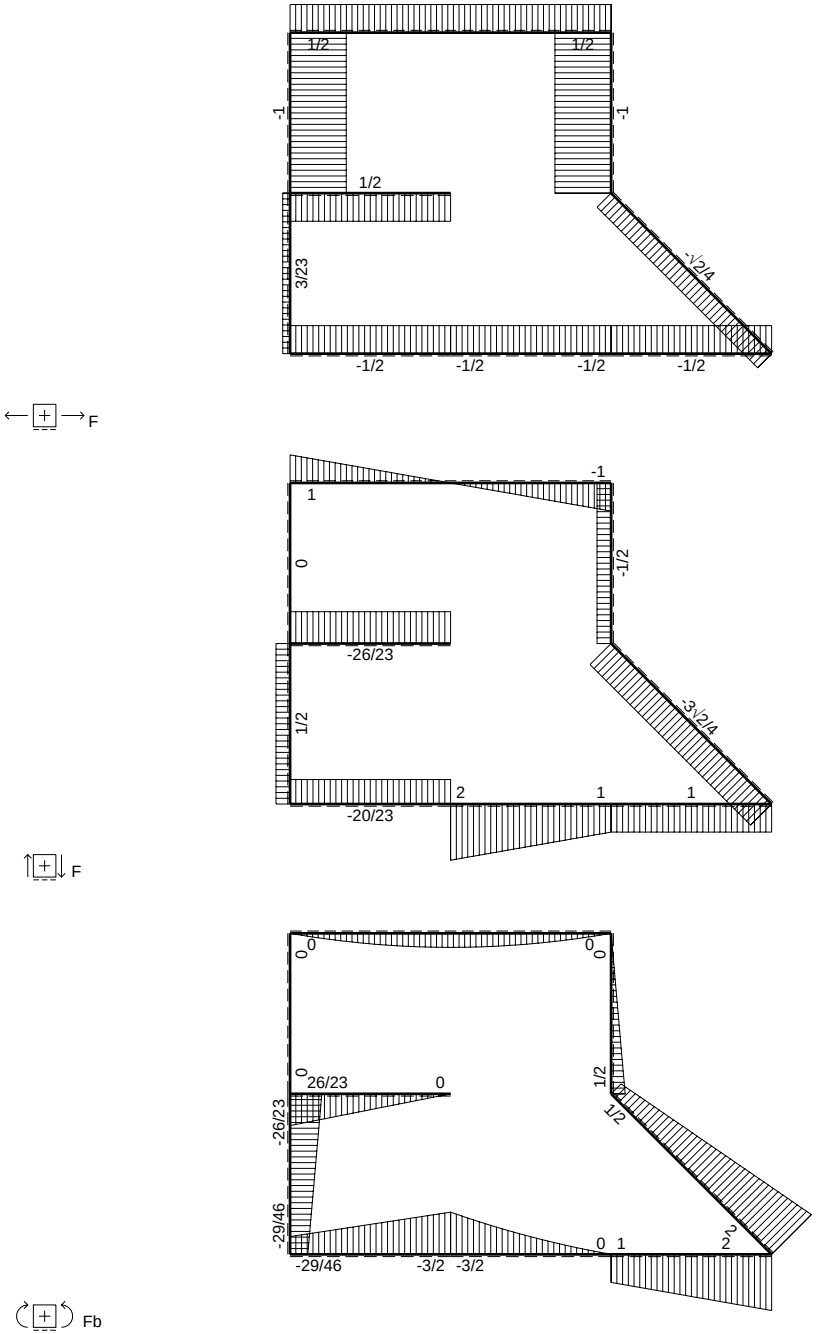
F
1/2
1/2
-1
-1
1/2
3/23
-1/2/4
-1/2
-1/2
-1/2
-1/2
F
-1
1
0
-1/2
-26/23
1/2
-3/2/4
2
1
1
-20/23
F
0
0
0
0
26/23
0
1/2
1/2
-26/23
-29/46
0
1
2
-29/46
-3/2
-3/2
Fb

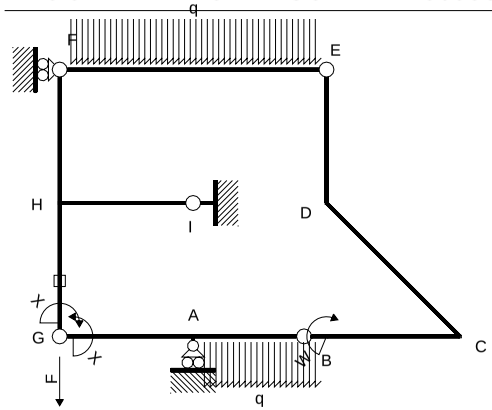

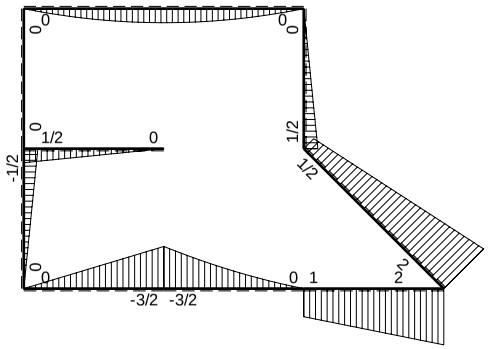

M_0 flessione da carichi assegnati

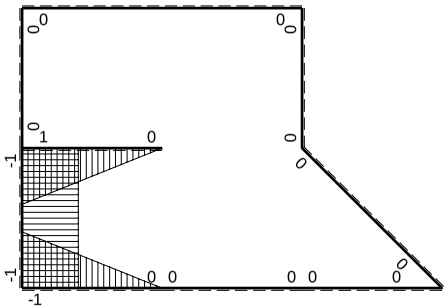

M_x flessione da iperstatica X=1

Quadro contributi PLV per iperstatica $X=W_{GA}$

→	$M_x(x)$	$M_o(x)$	M_xM_o	M_xM_x	$\int M_xM_o/EJdx$	$\int XM_xM_x/EJdx$
AB b	0	$-3/2Fb+2Fx-1/2qx^2$	0	0	0	0
BA b	0	$Fx+1/2qx^2$	0	0		
BC b	0	Fb+Fx	0	0	0	0
CB b	0	-2Fb+Fx	0	0		
CD √2b	0	2Fb-3√2/4Fx	0	0	0	0
DE b	0	1/2Fb-1/2Fx	0	0	0	0
ED b	0	-1/2Fx	0	0		
EF 2b	0	$-Fx+1/2qx^2$	0	0	0	0
FE 2b	0	$Fx-1/2qx^2$	0	0		
GA b	-1+x/b	-3/2Fx	$3/2Fx-3/2Fx^2/b$	$1-2x/b+x^2/b^2$	$1/4Fb^2/EJ$	1/3Xb/EJ
AG b	x/b	3/2Fb-3/2Fx	$3/2Fx-3/2Fx^2/b$	x^2/b^2		
FH b	0	0	0	0	0	0
HF b	0	0	0	0		
HI b	1-x/b	1/2Fb-1/2Fx	$1/2Fb-Fx+1/2Fx^2/b$	$1-2x/b+x^2/b^2$	$1/6Fb^2/EJ$	1/3Xb/EJ
IH b	-x/b	-1/2Fx	$1/2Fx^2/b$	x^2/b^2		
HG b	-1	-1/2Fb+1/2Fx	1/2Fb-1/2Fx	1	$1/4Fb^2/EJ$	Xb/EJ
GH b	1	1/2Fx	1/2Fx	1		
HG	elongazione asta $N_{1HG}\varepsilon_{HG}L_{HG}$				$-Fb^2/EJ$	
A	molla nodo $-V_{1A}(V_{0A}+XV_{1A})/k_A$				$-7/8Fb^2/EJ$	1/4Xb/EJ
	totali				$-29/24Fb^2/EJ$	23/12Xb/EJ
	iperstatica $X=W_{GA}$				29/46Fb	

Sviluppi di calcolo iperstatica

$L^{XX}_{GA} = \int_o^b (1 - 2\,x/b + x^2/b^2)\ 1/EJ\ dx = [\,x - x^2/b + 1/3\,x^3/b^2\,]_o^b\ 1/EJ$

$= (\,b - b + 1/3\,b\,)\ 1/EJ = 1/3\ b/EJ$

$L^{XX}_{AG} = \int_o^b (\,x^2/b^2\,)\ 1/EJ\ dx = [1/3\,x^3/b^2\,]_o^b\ 1/EJ$

$= (1/3\,b)\ 1/EJ = 1/3\ b/EJ$

$L^{XX}_{HI} = \int_o^b (1 - 2\,x/b + x^2/b^2)\ 1/EJ\ dx = [\,x - x^2/b + 1/3\,x^3/b^2\,]_o^b\ 1/EJ$

$= (\,b - b + 1/3\,b\,)\ 1/EJ = 1/3\ b/EJ$

$L^{XX}_{IH} = \int_o^b (\,x^2/b^2\,)\ 1/EJ\ dx = [1/3\,x^3/b^2\,]_o^b\ 1/EJ$

$= (1/3\,b)\ 1/EJ = 1/3\ b/EJ$

$L^{XX}_{HG} = \int_o^b (1)\ 1/EJ\ dx = [\,x\,]_o^b\ 1/EJ$

$= (\,b\,)\ 1/EJ = b/EJ$

$L^{XX}_{GH} = \int_o^b (1)\ 1/EJ\ dx = [\,x\,]_o^b\ 1/EJ$

$= (\,b\,)\ 1/EJ = b/EJ$

$L^{Xo}_{GA} = \int_o^b (3/2\,x/b - 3/2\,x^2/b^2)\ Fb\ 1/EJ\ dx = [3/4\,x^2/b - 1/2\,x^3/b^2\,]_o^b\ Fb\ 1/EJ$

$= (3/4\,b - 1/2\,b)\ Fb\ 1/EJ = 1/4\ Fb^2/EJ$

$L^{Xo}_{AG} = \int_o^b (3/2\,x/b - 3/2\,x^2/b^2)\ Fb\ 1/EJ\ dx = [3/4\,x^2/b - 1/2\,x^3/b^2\,]_o^b\ Fb\ 1/EJ$

$= (3/4\,b - 1/2\,b)\ Fb\ 1/EJ = 1/4\ Fb^2/EJ$

$L^{Xo}_{HI} = \int_o^b (1/2 - x/b + 1/2\,x^2/b^2)\ Fb\ 1/EJ\ dx = [1/2\,x - 1/2\,x^2/b + 1/6\,x^3/b^2\,]_o^b\ Fb\ 1/EJ$

$= (1/2\,b - 1/2\,b + 1/6\,b)\ Fb\ 1/EJ = 1/6\ Fb^2/EJ$

$L^{Xo}_{IH} = \int_o^b (1/2\,x^2/b^2)\ Fb\ 1/EJ\ dx = [1/6\,x^3/b^2\,]_o^b\ Fb\ 1/EJ$

$= (1/6\,b)\ Fb\ 1/EJ = 1/6\ Fb^2/EJ$

$L^{Xo}_{HG} = \int_o^b (1/2 - 1/2\,x/b)\ Fb\ 1/EJ\ dx - 1\ \ (-1)\ \ (-1)\ \ Fb^2/EJ$

$= [1/2\,x - 1/4\,x^2/b\,]_o^b\ Fb\ 1/EJ\ - 1\ \ (-1)\ \ (-1)\ \ Fb^2/EJ$

$= (1/2\,b - 1/4\,b)\ Fb\ 1/EJ\ - 1\ \ (-1)\ \ (-1)\ \ Fb^2/EJ = -3/4\ \ Fb^2/EJ$

$L^{Xo}_{GH} = \int_o^b (1/2\,x/b)\ Fb\ 1/EJ\ dx - 1\ \ (-1)\ \ (-1)\ \ Fb^2/EJ = [1/4\,x^2/b\,]_o^b\ Fb\ 1/EJ\ - 1\ \ (-1)\ \ (-1)\ \ Fb^2/EJ$

$= (1/4\,b)\ Fb\ 1/EJ\ - 1\ \ (-1)\ \ (-1)\ \ Fb^2/EJ = -3/4\ \ Fb^2/EJ$

PROCEDIMENTO E RISULTATI 236538 ESΣ05.xxxx.103

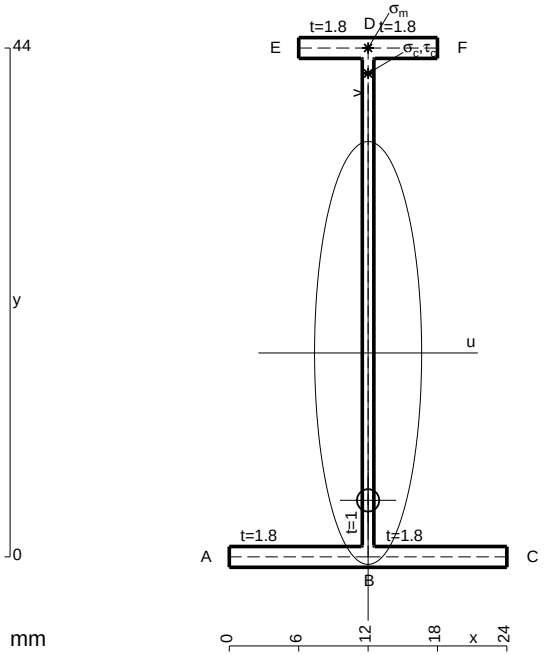

A = 108.8 mm^2
J_u = 36386. mm^4
J_v = 2333. mm^4
J_t = 84.65 mm^4
y_o = -12.74 mm
y_g = 17.63 mm
N = -215. N
T_y = 860. N
M_x = -316050. Nmm
x_m = 12. mm
y_m = 44. mm
v_m = 26.37 mm
$\sigma_m = N/A - Mv/J_u$ = 227.1 N/mm^2
y_c = 2. mm
u_c = -12. mm
v_c = -15.63 mm
$\sigma_c = N/A - Mv/J_u$ = 227.1 N/mm^2
$\tau_c = TS^*/tJ_u$ = 13.46 N/mm^2
$\tau_g = TS^*/tJ_u$ = 13.46 N/mm^2
t_c = 430. mm
$\sigma_o = \sqrt{\sigma^2 + 3\tau^2}$ = 228.2 N/mm^2

ESΣ05.xxxx.103

@ Adolfo Zavelani Rossi, Politecnico di Milano, vers.27.03.13 01.12.25

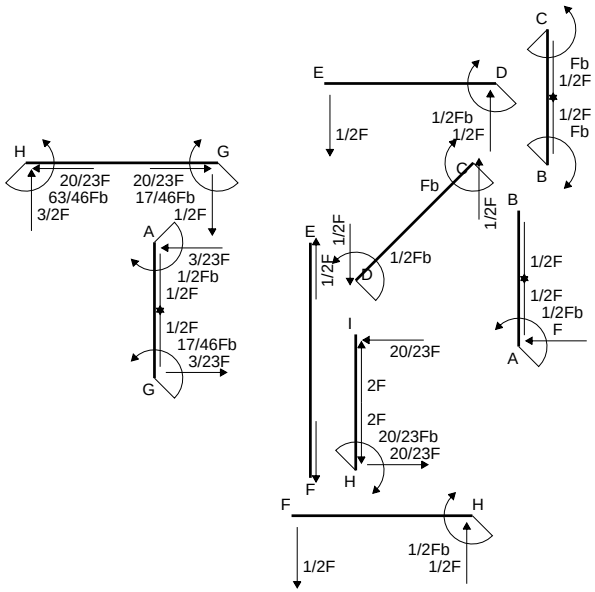
H
G
20/23F
63/46Fb
3/2F
20/23F
17/46Fb
1/2F
A
3/23F
1/2Fb
1/2F
1/2F
17/46Fb
3/23F
G
E
D
1/2F
1/2Fb
1/2F
C
Fb
1/2F
1/2F
Fb
B
Fb
C
1/2F
B
E
1/2F
1/2F
D
1/2Fb
1/2F
1/2F
1/2Fb
F
A
I
20/23F
2F
2F
20/23Fb
20/23F
H
F
F
H
1/2Fb
1/2F
1/2F

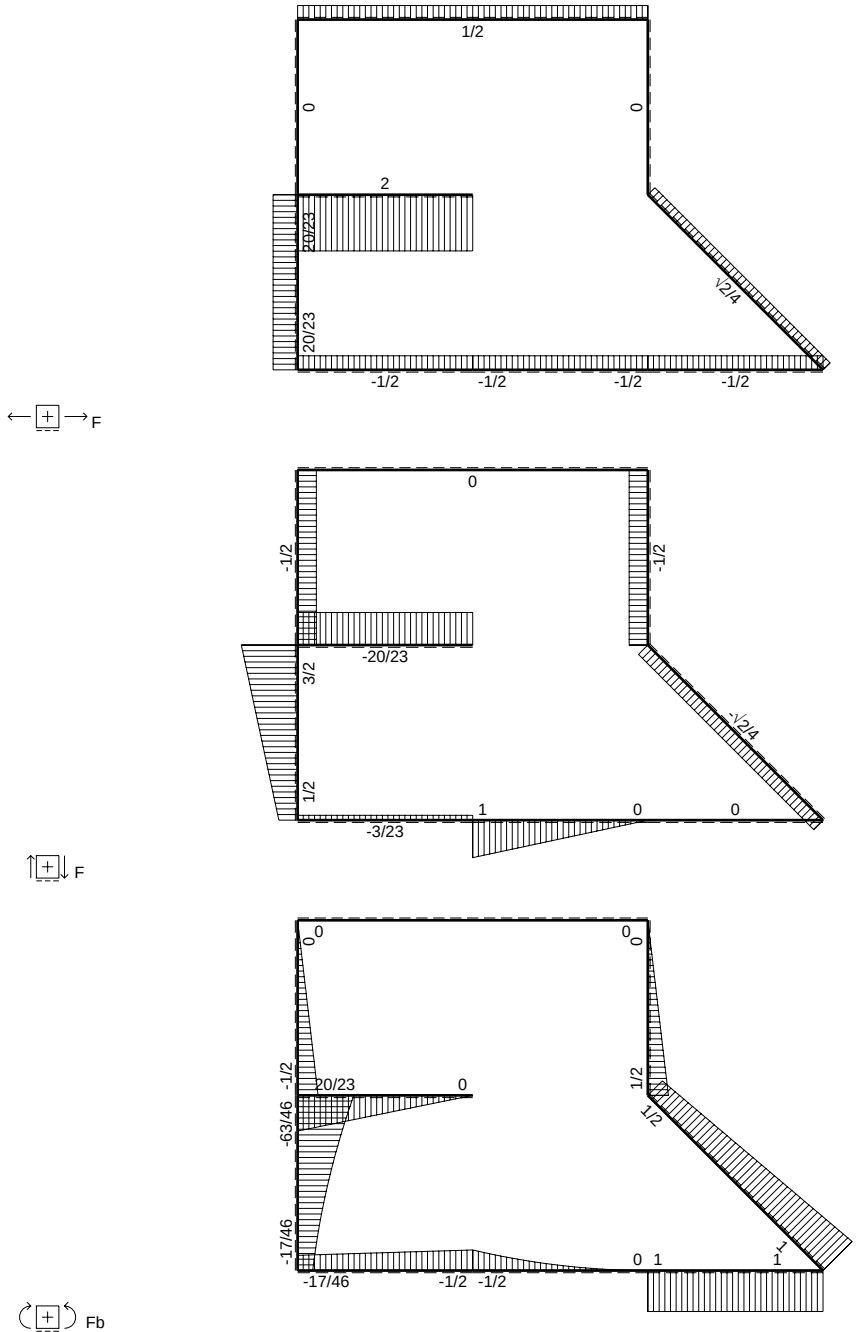
F
1/2
0
0
2
20/23
1/2
20/23
-1/2
-1/2
-1/2
-1/2
F
0
-1/2
-1/2
-20/23
3/2
1/2
1
0
0
-3/23
Fb
0
0
0
0
-1/2
20/23
0
1/2
1/2
-63/46
-17/46
0
1
1
-17/46
-1/2
-1/2

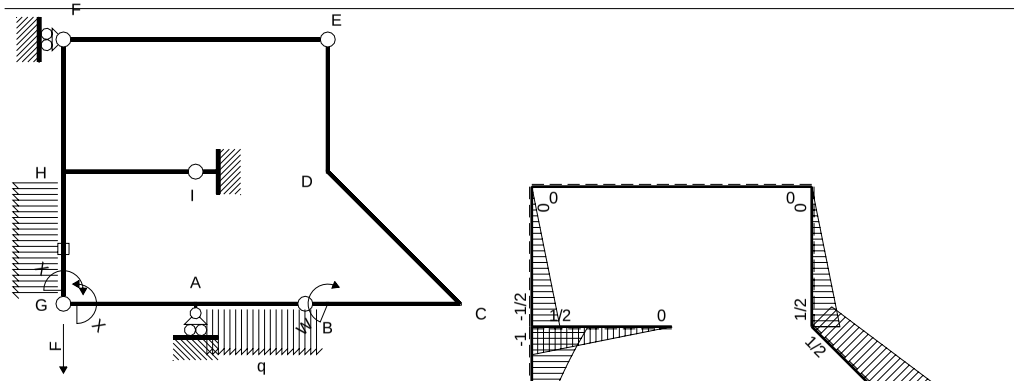

M_0 flessione da carichi assegnati

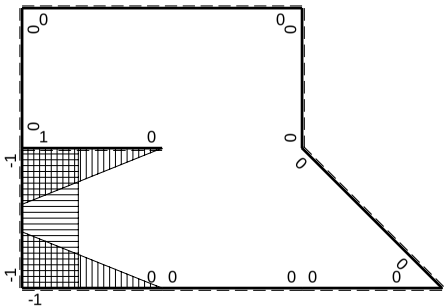

M_x flessione da iperstatica X=1

Quadro contributi PLV per iperstatica $X=W_{GA}$

→	$M_x(x)$	$M_o(x)$	M_xM_o	M_xM_x	$\int M_xM_o/EJdx$	$\int XM_xM_x/EJdx$
AB b	0	$-1/2Fb+Fx-1/2qx^2$	0	0	0	0
BA b	0	$1/2qx^2$	0	0		
BC b	0	Fb	0	0	0	0
CB b	0	-Fb	0	0		
CD $\sqrt{2}$b	0	$Fb-\sqrt{2}/4Fx$	0	0	0	0
DE b	0	1/2Fb-1/2Fx	0	0	0	0
ED b	0	-1/2Fx	0	0		
EF 2b	0	0	0	0	0	0
FE 2b	0	0	0	0		
GA b	-1+x/b	-1/2Fx	$1/2Fx-1/2Fx^2/b$	$1-2x/b+x^2/b^2$	$1/12Fb^2/EJ$	1/3Xb/EJ
AG b	x/b	1/2Fb-1/2Fx	$1/2Fx-1/2Fx^2/b$	x^2/b^2		
FH b	0	-1/2Fx	0	0	0	0
HF b	0	1/2Fb-1/2Fx	0	0		
HI b	1-x/b	1/2Fb-1/2Fx	$1/2Fb-Fx+1/2Fx^2/b$	$1-2x/b+x^2/b^2$	$1/6Fb^2/EJ$	1/3Xb/EJ
IH b	-x/b	-1/2Fx	$1/2Fx^2/b$	x^2/b^2		
HG b	-1	$-Fb+3/2Fx-1/2qx^2$	$Fb-3/2Fx+1/2Fx^2/b$	1	$5/12Fb^2/EJ$	Xb/EJ
GH b	1	$1/2Fx+1/2qx^2$	$1/2Fx+1/2Fx^2/b$	1		
HG	elongazione asta $N_{1HG}\varepsilon_{HG}L_{HG}$				$-Fb^2/EJ$	
A	molla nodo $-V_{1A}(V_{0A}+XV_{1A})/k_A$				$-3/8Fb^2/EJ$	1/4Xb/EJ
	totali				$-17/24Fb^2/EJ$	23/12Xb/EJ
	iperstatica $X=W_{GA}$				17/46Fb	

Sviluppi di calcolo iperstatica

@ Adolfo Zavelani Rossi, Politecnico di Milano, vers.27.03.13 01.12.25

$L^{XX}_{GA} = \int_o^b (1 - 2\,x/b + x^2/b^2)\ 1/EJ\ dx = [\ x - x^2/b + 1/3\ x^3/b^2\ ]_o^b\ 1/EJ$

$= (\ b - b + 1/3\ b\ )\ 1/EJ\ = 1/3\ b/EJ$

$L^{XX}_{AG} = \int_o^b (\ x^2/b^2\ )\ 1/EJ\ dx = [1/3\ x^3/b^2\ ]_o^b\ 1/EJ$

$= (1/3\ b\ )\ 1/EJ\ = 1/3\ b/EJ$

$L^{XX}_{HI} = \int_o^b (1 - 2\,x/b + x^2/b^2)\ 1/EJ\ dx = [\ x - x^2/b + 1/3\ x^3/b^2\ ]_o^b\ 1/EJ$

$= (\ b - b + 1/3\ b\ )\ 1/EJ\ = 1/3\ b/EJ$

$L^{XX}_{IH} = \int_o^b (\ x^2/b^2\ )\ 1/EJ\ dx = [1/3\ x^3/b^2\ ]_o^b\ 1/EJ$

$= (1/3\ b\ )\ 1/EJ\ = 1/3\ b/EJ$

$L^{XX}_{HG} = \int_o^b (1\ )\ 1/EJ\ dx = [\ x\ ]_o^b\ 1/EJ$

$= (\ b\ )\ 1/EJ\ =\ b/EJ$

$L^{XX}_{GH} = \int_o^b (1\ )\ 1/EJ\ dx = [\ x\ ]_o^b\ 1/EJ$

$= (\ b\ )\ 1/EJ\ =\ b/EJ$

$L^{Xo}_{GA} = \int_o^b (1/2\ x/b - 1/2\ x^2/b^2\ )\ Fb\ 1/EJ\ dx = [1/4\ x^2/b - 1/6\ x^3/b^2\ ]_o^b\ Fb\ 1/EJ$

$= (1/4\ b - 1/6\ b\ )\ Fb\ 1/EJ\ = 1/12\ \ Fb^2/EJ$

$L^{Xo}_{AG} = \int_o^b (1/2\ x/b - 1/2\ x^2/b^2\ )\ Fb\ 1/EJ\ dx = [1/4\ x^2/b - 1/6\ x^3/b^2\ ]_o^b\ Fb\ 1/EJ$

$= (1/4\ b - 1/6\ b\ )\ Fb\ 1/EJ\ = 1/12\ \ Fb^2/EJ$

$L^{Xo}_{HI} = \int_o^b (1/2 - x/b + 1/2\ x^2/b^2\ )\ Fb\ 1/EJ\ dx = [1/2\ x - 1/2\ x^2/b + 1/6\ x^3/b^2\ ]_o^b\ Fb\ 1/EJ$

$= (1/2\ b - 1/2\ b + 1/6\ b\ )\ Fb\ 1/EJ\ = 1/6\ \ Fb^2/EJ$

$L^{Xo}_{IH} = \int_o^b (1/2\ x^2/b^2\ )\ Fb\ 1/EJ\ dx = [1/6\ x^3/b^2\ ]_o^b\ Fb\ 1/EJ$

$= (1/6\ b\ )\ Fb\ 1/EJ\ = 1/6\ \ Fb^2/EJ$

$L^{Xo}_{HG} = \int_o^b (1 - 3/2\ x/b + 1/2\ x^2/b^2\ )\ Fb\ 1/EJ\ dx - 1\ \ (-1)\ \ (-1)\ \ Fb^2/EJ$

$= [\ x - 3/4\ x^2/b + 1/6\ x^3/b^2\ ]_o^b\ Fb\ 1/EJ\ - 1\ \ (-1)\ \ (-1)\ \ Fb^2/EJ$

$= (\ b - 3/4\ b + 1/6\ b\ )\ Fb\ 1/EJ\ - 1\ \ (-1)\ \ (-1)\ \ Fb^2/EJ = -7/12\ \ Fb^2/EJ$

$L^{Xo}_{GH} = \int_o^b (1/2\ x/b + 1/2\ x^2/b^2\ )\ Fb\ 1/EJ\ dx - 1\ \ (-1)\ \ (-1)\ \ Fb^2/EJ$

$= [1/4\ x^2/b + 1/6\ x^3/b^2\ ]_o^b\ Fb\ 1/EJ\ - 1\ \ (-1)\ \ (-1)\ \ Fb^2/EJ$

$= (1/4\ b + 1/6\ b\ )\ Fb\ 1/EJ\ - 1\ \ (-1)\ \ (-1)\ \ Fb^2/EJ = -7/12\ \ Fb^2/EJ$

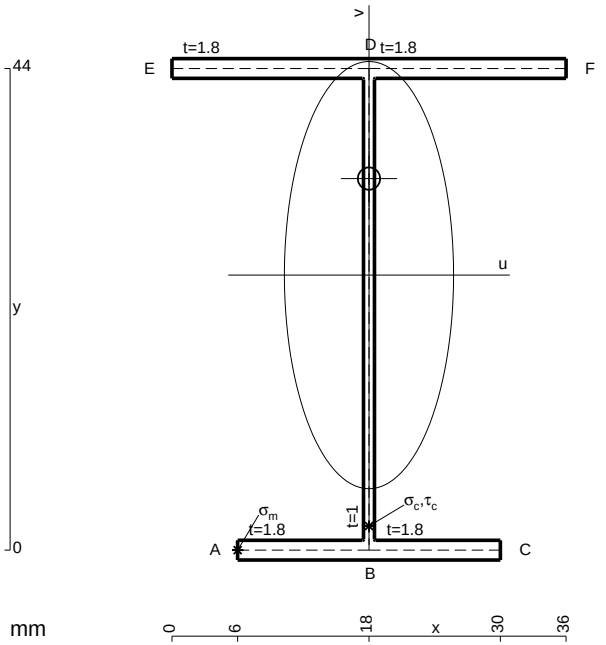

A = 152. mm^2
J_u = 57885. mm^4
J_v = 9072. mm^4
J_t = 131.3 mm^4
y_o = 8.817 mm
y_g = 25.13 mm
N = -1010. N
T_y = 2020. N
M_x = -535300. Nmm
x_m = 6. mm
u_m = -12. mm
v_m = -25.13 mm
$\sigma_m = N/A - Mv/J_u$ = -239. N/mm^2
x_c = 18. mm
v_c = -25.13 mm
$\sigma_c = N/A - Mv/J_u$ = -239. N/mm^2
$\tau_c = TS^*/tJ_u$ = 37.88 N/mm^2
$\tau_g = TS^*/tJ_u$ = 37.88 N/mm^2
t_c = 2020. mm
$\sigma_o = \sqrt{\sigma^2 + 3\tau^2}$ = 247.8 N/mm^2

ESΣ05.xxxx.104

@ Adolfo Zavelani Rossi, Politecnico di Milano, vers.27.03.13 01.12.25

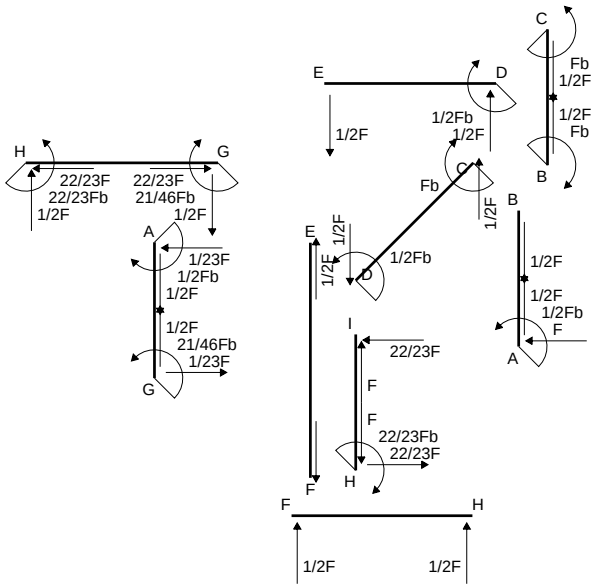
H
G
22/23F
22/23Fb
1/2F
22/23F
21/46Fb
1/2F
A
1/23F
1/2Fb
1/2F
1/2F
21/46Fb
1/23F
G
E
D
1/2F
1/2Fb
1/2F
C
Fb
1/2F
E
1/2F
1/2F
1/2Fb
D
C
1/2F
Fb
B
1/2F
1/2F
1/2Fb
F
A
I
22/23F
F
F
22/23Fb
22/23F
H
F
F
H
1/2F
1/2F
C
Fb
1/2F
1/2F
Fb
B

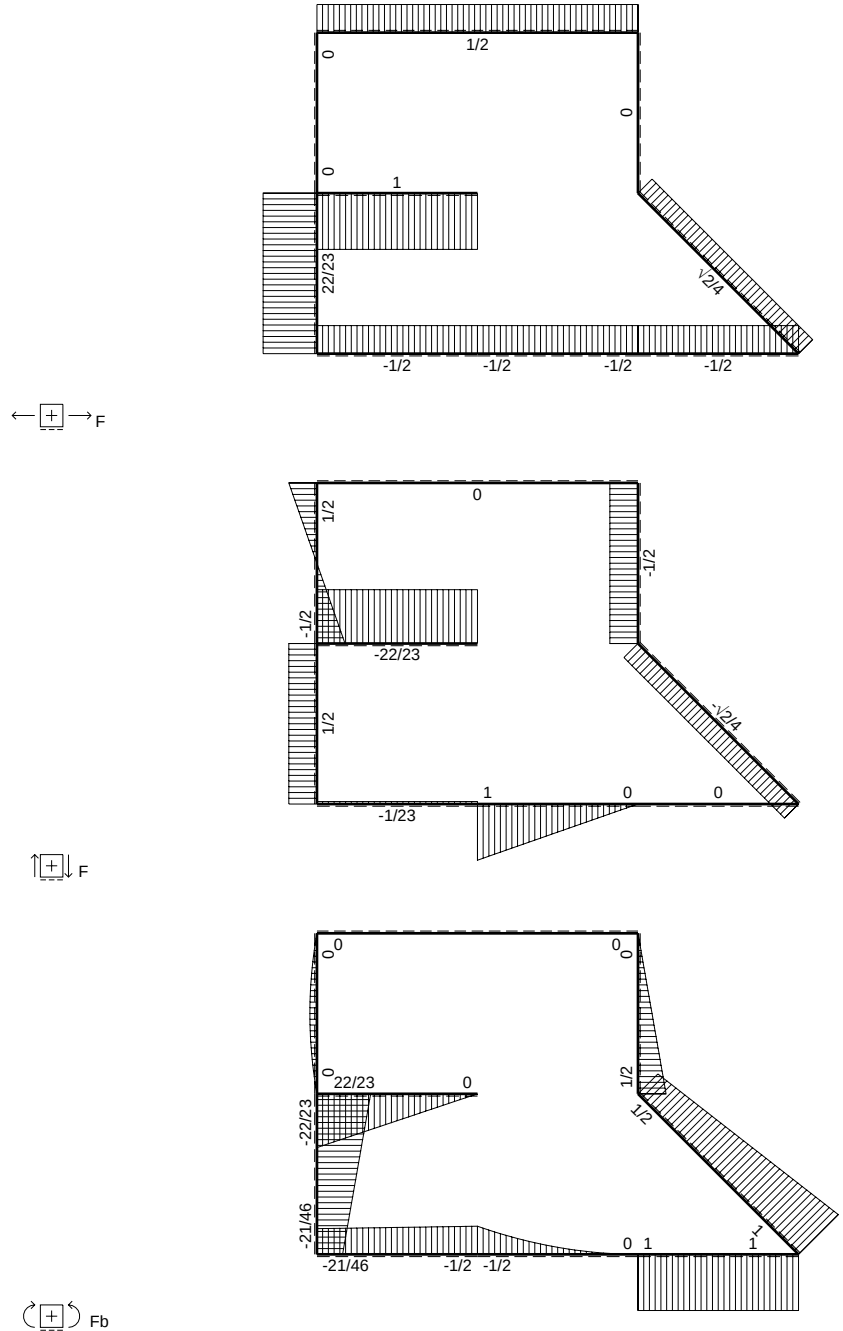
1/2
0
0
0
1
22/23
√2/4
-1/2
-1/2
-1/2
-1/2
F
0
1/2
-1/2
-1/2
-22/23
-√2/4
1/2
1
0
0
-1/23
F
0
0
0
0
22/23
0
1/2
1/2
-22/23
-21/46
0
1
1
-21/46
-1/2
-1/2
Fb

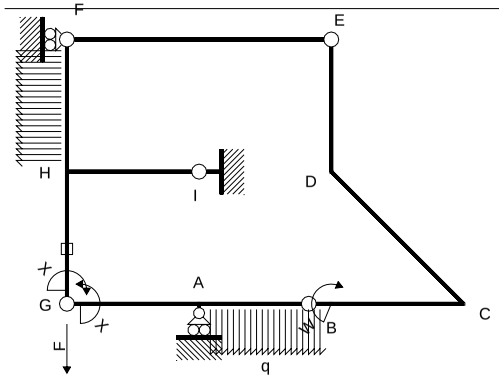

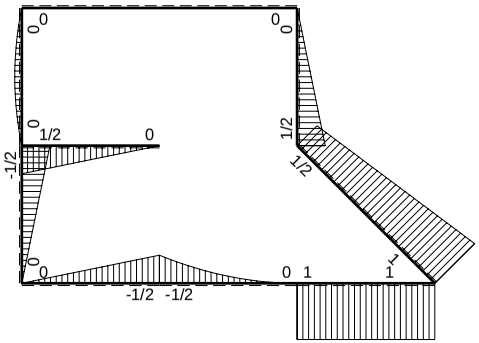

M_0 flessione da carichi assegnati

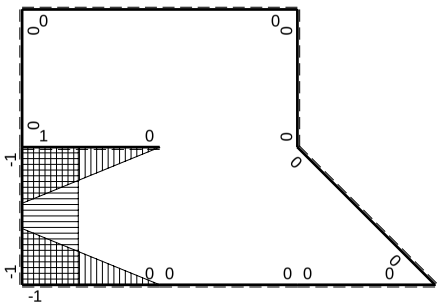

M_x flessione da iperstatica X=1

Quadro contributi PLV per iperstatica $X=W_{GA}$

→	$M_x(x)$	$M_o(x)$	M_xM_o	M_xM_x	$\int M_xM_o/EJdx$	$\int XM_xM_x/EJdx$
AB b	0	$-1/2Fb+Fx-1/2qx^2$	0	0	0	0
BA b	0	$1/2qx^2$	0	0		
BC b	0	Fb	0	0	0	0
CB b	0	-Fb	0	0		
CD $\sqrt{2}$b	0	$Fb-\sqrt{2}/4Fx$	0	0	0	0
DE b	0	1/2Fb-1/2Fx	0	0	0	0
ED b	0	-1/2Fx	0	0		
EF 2b	0	0	0	0	0	0
FE 2b	0	0	0	0		
GA b	-1+x/b	$-1/2Fx$	$1/2Fx-1/2Fx^2/b$	$1-2x/b+x^2/b^2$	$1/12Fb^2/EJ$	1/3Xb/EJ
AG b	x/b	1/2Fb-1/2Fx	$1/2Fx-1/2Fx^2/b$	x^2/b^2		
FH b	0	$1/2Fx-1/2qx^2$	0	0	0	0
HF b	0	$-1/2Fx+1/2qx^2$	0	0		
HI b	1-x/b	1/2Fb-1/2Fx	$1/2Fb-Fx+1/2Fx^2/b$	$1-2x/b+x^2/b^2$	$1/6Fb^2/EJ$	1/3Xb/EJ
IH b	-x/b	-1/2Fx	$1/2Fx^2/b$	x^2/b^2		
HG b	-1	-1/2Fb+1/2Fx	1/2Fb-1/2Fx	1	$1/4Fb^2/EJ$	Xb/EJ
GH b	1	1/2Fx	1/2Fx	1		
HG	elongazione asta $N_{1HG}\varepsilon_{HG}L_{HG}$				$-Fb^2/EJ$	
A	molla nodo $-V_{1A}(V_{0A}+XV_{1A})/k_A$				$-3/8Fb^2/EJ$	1/4Xb/EJ
	totali				$-7/8Fb^2/EJ$	23/12Xb/EJ
	iperstatica $X=W_{GA}$				21/46Fb	

Sviluppi di calcolo iperstatica

$L^{XX}_{GA} = \int_o^b (1 - 2\,x/b + x^2/b^2)\ 1/EJ\ dx = [\,x - x^2/b + 1/3\,x^3/b^2\,]_o^b\ 1/EJ$

$= (\,b - b + 1/3\,b\,)\ 1/EJ = 1/3\ b/EJ$

$L^{XX}_{AG} = \int_o^b (\,x^2/b^2\,)\ 1/EJ\ dx = [1/3\,x^3/b^2\,]_o^b\ 1/EJ$

$= (1/3\,b\,)\ 1/EJ = 1/3\ b/EJ$

$L^{XX}_{HI} = \int_o^b (1 - 2\,x/b + x^2/b^2)\ 1/EJ\ dx = [\,x - x^2/b + 1/3\,x^3/b^2\,]_o^b\ 1/EJ$

$= (\,b - b + 1/3\,b\,)\ 1/EJ = 1/3\ b/EJ$

$L^{XX}_{IH} = \int_o^b (\,x^2/b^2\,)\ 1/EJ\ dx = [1/3\,x^3/b^2\,]_o^b\ 1/EJ$

$= (1/3\,b\,)\ 1/EJ = 1/3\ b/EJ$

$L^{XX}_{HG} = \int_o^b (1)\ 1/EJ\ dx = [\,x\,]_o^b\ 1/EJ$

$= (\,b\,)\ 1/EJ = b/EJ$

$L^{XX}_{GH} = \int_o^b (1)\ 1/EJ\ dx = [\,x\,]_o^b\ 1/EJ$

$= (\,b\,)\ 1/EJ = b/EJ$

$L^{Xo}_{GA} = \int_o^b (1/2\,x/b - 1/2\,x^2/b^2)\ Fb\ 1/EJ\ dx = [1/4\,x^2/b - 1/6\,x^3/b^2\,]_o^b\ Fb\ 1/EJ$

$= (1/4\,b - 1/6\,b\,)\ Fb\ 1/EJ = 1/12\ Fb^2/EJ$

$L^{Xo}_{AG} = \int_o^b (1/2\,x/b - 1/2\,x^2/b^2\,)\ Fb\ 1/EJ\ dx = [1/4\,x^2/b - 1/6\,x^3/b^2\,]_o^b\ Fb\ 1/EJ$

$= (1/4\,b - 1/6\,b\,)\ Fb\ 1/EJ = 1/12\ Fb^2/EJ$

$L^{Xo}_{HI} = \int_o^b (1/2 - x/b + 1/2\,x^2/b^2\,)\ Fb\ 1/EJ\ dx = [1/2\,x - 1/2\,x^2/b + 1/6\,x^3/b^2\,]_o^b\ Fb\ 1/EJ$

$= (1/2\,b - 1/2\,b + 1/6\,b\,)\ Fb\ 1/EJ = 1/6\ Fb^2/EJ$

$L^{Xo}_{IH} = \int_o^b (1/2\,x^2/b^2\,)\ Fb\ 1/EJ\ dx = [1/6\,x^3/b^2\,]_o^b\ Fb\ 1/EJ$

$= (1/6\,b\,)\ Fb\ 1/EJ = 1/6\ Fb^2/EJ$

$L^{Xo}_{HG} = \int_o^b (1/2 - 1/2\,x/b\,)\ Fb\ 1/EJ\ dx - 1\ \ (-1)\ \ (-1)\ \ Fb^2/EJ$

$= [1/2\,x - 1/4\,x^2/b\,]_o^b\ Fb\ 1/EJ\ -\ 1\ \ (-1)\ \ (-1)\ \ Fb^2/EJ$

$= (1/2\,b - 1/4\,b\,)\ Fb\ 1/EJ\ -\ 1\ \ (-1)\ \ (-1)\ \ Fb^2/EJ = -3/4\ \ Fb^2/EJ$

$L^{Xo}_{GH} = \int_o^b (1/2\,x/b\,)\ Fb\ 1/EJ\ dx - 1\ \ (-1)\ \ (-1)\ \ Fb^2/EJ = [1/4\,x^2/b\,]_o^b\ Fb\ 1/EJ\ -\ 1\ \ (-1)\ \ (-1)\ \ Fb^2/EJ$

$= (1/4\,b\,)\ Fb\ 1/EJ\ -\ 1\ \ (-1)\ \ (-1)\ \ Fb^2/EJ = -3/4\ \ Fb^2/EJ$

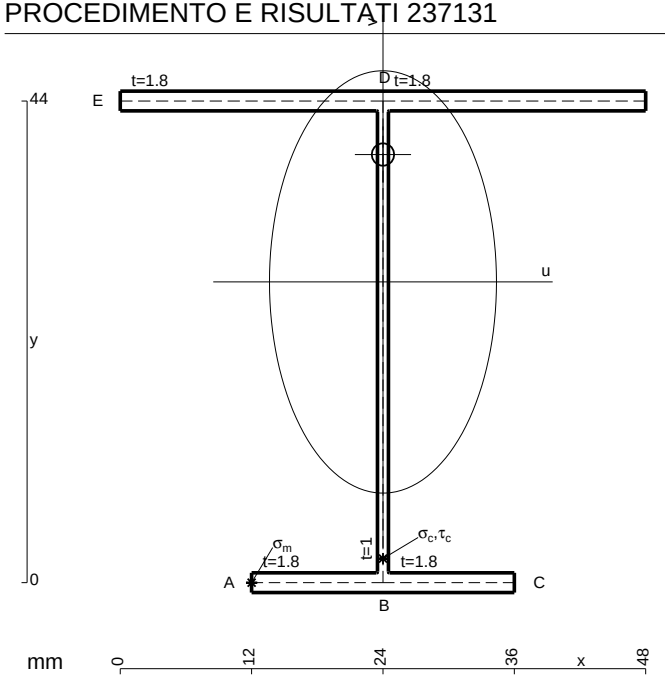

A = 173.6 mm^2
J_u = 64622. mm^4
J_v = 18662. mm^4
J_t = 154.6 mm^4
y_o = 11.64 mm
y_g = 27.47 mm
N = -805. N
T_y = 1610. N
M_x = -458850. Nmm
x_m = 12. mm
u_m = -12. mm
v_m = -27.47 mm
$\sigma_m = N/A - Mv/J_u$ = -199.7 N/mm^2
x_c = 24. mm
v_c = -27.47 mm
$\sigma_c = N/A - Mv/J_u$ = -199.7 N/mm^2
$\tau_c = TS^*/tJ_u$ = 29.57 N/mm^2
$\tau_g = TS^*/tJ_u$ = 29.57 N/mm^2
t_c = 1610. mm
$\sigma_o = \sqrt{\sigma^2 + 3\tau^2}$ = 206.2 N/mm^2

ESΣ05.xxxx.105

@ Adolfo Zavelani Rossi, Politecnico di Milano, vers.27.03.13 01.12.25

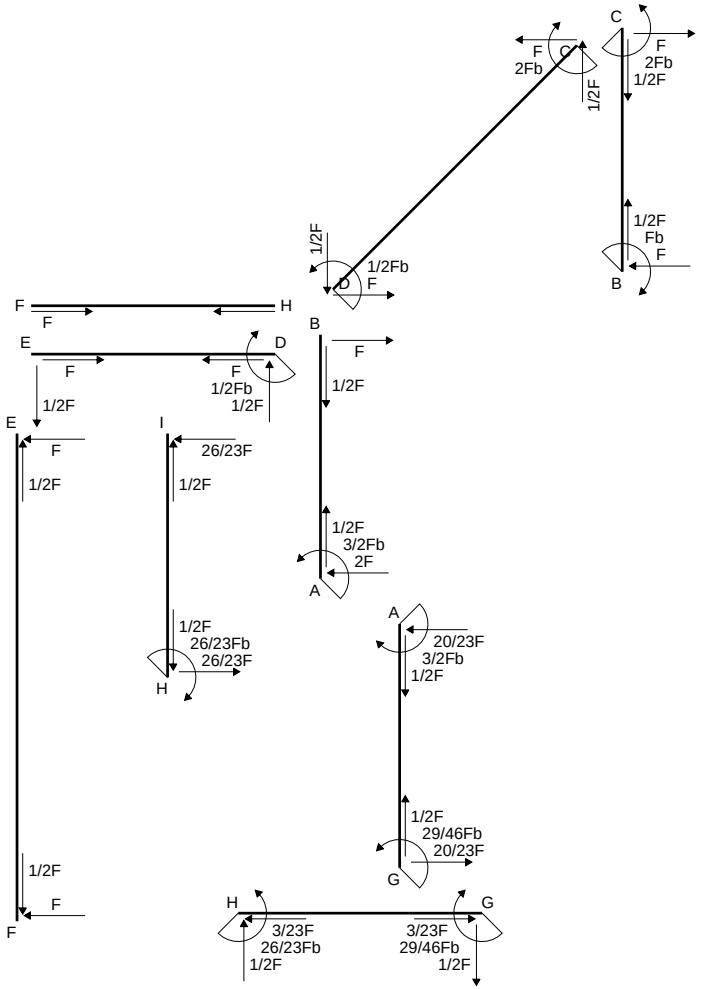
C
F
2Fb
1/2F
F
2Fb
1/2F
F
C
1/2F
1/2F
Fb
F
B
1/2Fb
F
D
F
H
F
E
D
F
F
1/2Fb
1/2F
1/2F
B
F
1/2F
E
F
1/2F
I
26/23F
1/2F
1/2F
3/2Fb
2F
A
1/2F
26/23Fb
26/23F
H
A
20/23F
3/2Fb
1/2F
1/2F
29/46Fb
20/23F
G
1/2F
F
F
H
G
3/23F
26/23Fb
1/2F
3/23F
29/46Fb
1/2F

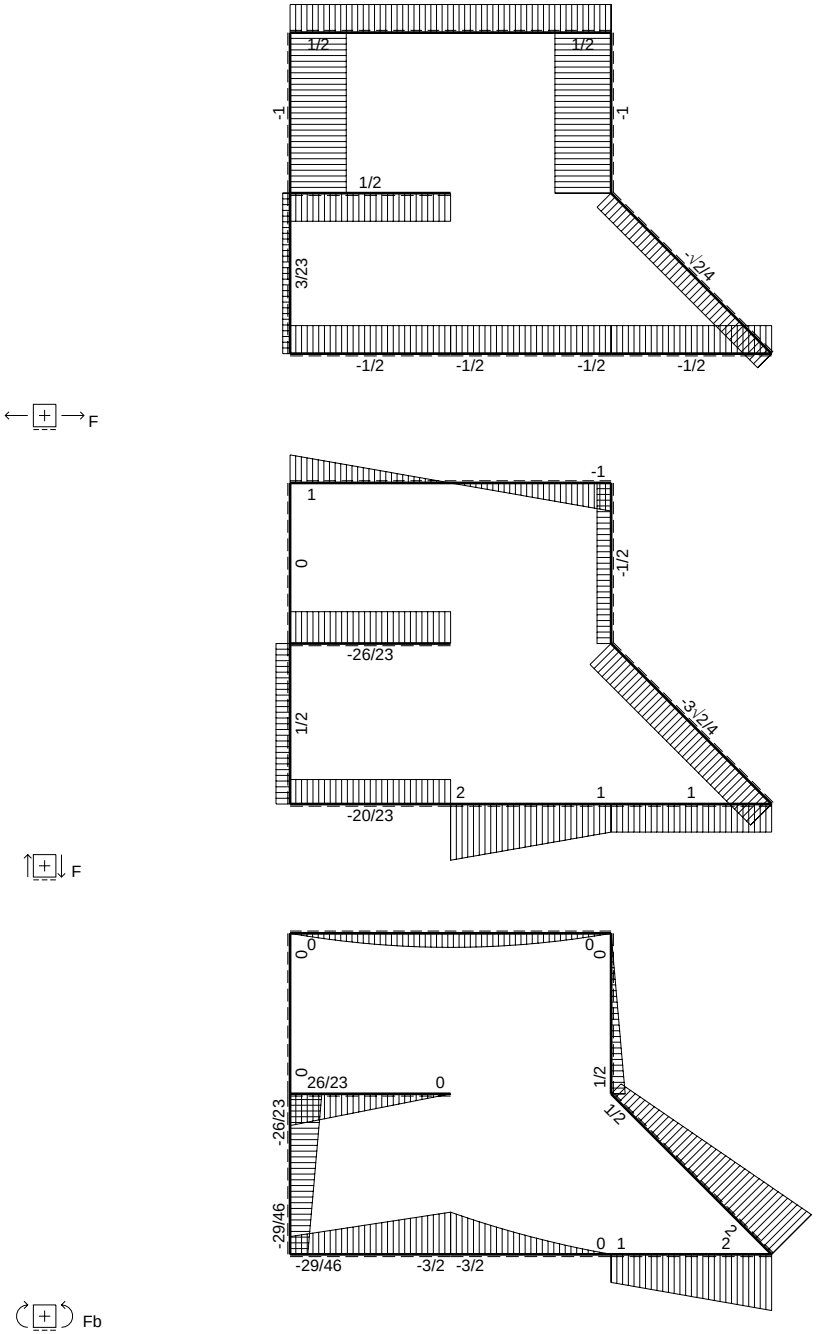
1/2
1/2
-1
-1
1/2
3/23
-1/2
-1/2
-1/2
-1/2
-1/2
F
1
-1
0
-1/2
-26/23
1/2
-3/2
2
1
1
-20/23
F
0
0
0
0
26/23
0
1/2
1/2
-26/23
-29/46
0
1
2
-29/46
-3/2
-3/2
Fb

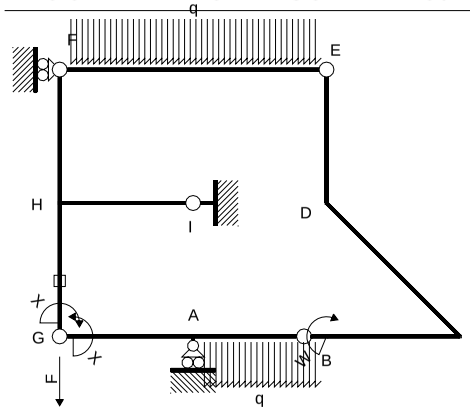

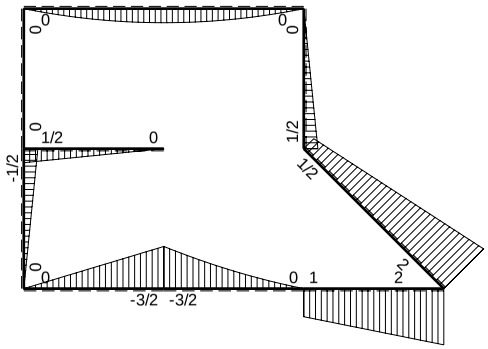

M_0 flessione da carichi assegnati

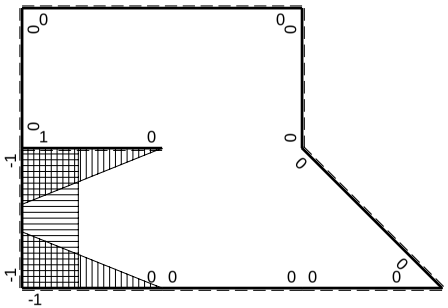

M_x flessione da iperstatica X=1

Quadro contributi PLV per iperstatica $X=W_{GA}$

→	$M_x(x)$	$M_o(x)$	M_xM_o	M_xM_x	$\int M_xM_o/EJdx$	$\int XM_xM_x/EJdx$
AB b	0	$-3/2Fb+2Fx-1/2qx^2$	0	0	0	0
BA b	0	$Fx+1/2qx^2$	0	0		
BC b	0	Fb+Fx	0	0	0	0
CB b	0	-2Fb+Fx	0	0		
CD √2b	0	2Fb-3√2/4Fx	0	0	0	0
DE b	0	1/2Fb-1/2Fx	0	0	0	0
ED b	0	-1/2Fx	0	0		
EF 2b	0	$-Fx+1/2qx^2$	0	0	0	0
FE 2b	0	$Fx-1/2qx^2$	0	0		
GA b	-1+x/b	-3/2Fx	$3/2Fx-3/2Fx^2/b$	$1-2x/b+x^2/b^2$	$1/4Fb^2/EJ$	1/3Xb/EJ
AG b	x/b	3/2Fb-3/2Fx	$3/2Fx-3/2Fx^2/b$	x^2/b^2		
FH b	0	0	0	0	0	0
HF b	0	0	0	0		
HI b	1-x/b	1/2Fb-1/2Fx	$1/2Fb-Fx+1/2Fx^2/b$	$1-2x/b+x^2/b^2$	$1/6Fb^2/EJ$	1/3Xb/EJ
IH b	-x/b	-1/2Fx	$1/2Fx^2/b$	x^2/b^2		
HG b	-1	-1/2Fb+1/2Fx	1/2Fb-1/2Fx	1	$1/4Fb^2/EJ$	Xb/EJ
GH b	1	1/2Fx	1/2Fx	1		
HG	elongazione asta $N_{1HG}\varepsilon_{HG}L_{HG}$				$-Fb^2/EJ$	
A	molla nodo $-V_{1A}(V_{0A}+XV_{1A})/k_A$				-7/8Fb^2/EJ	1/4Xb/EJ
	totali				$-29/24Fb^2/EJ$	23/12Xb/EJ
	iperstatica $X=W_{GA}$				29/46Fb	

Sviluppi di calcolo iperstatica

$L^{XX}_{GA} = \int_o^b (1 - 2\,x/b + x^2/b^2)\ 1/EJ\ dx = [\,x - x^2/b + 1/3\,x^3/b^2\,]_o^b\ 1/EJ$

$= (\,b - b + 1/3\,b\,)\ 1/EJ = 1/3\ b/EJ$

$L^{XX}_{AG} = \int_o^b (\,x^2/b^2\,)\ 1/EJ\ dx = [1/3\,x^3/b^2\,]_o^b\ 1/EJ$

$= (1/3\,b)\ 1/EJ = 1/3\ b/EJ$

$L^{XX}_{HI} = \int_o^b (1 - 2\,x/b + x^2/b^2)\ 1/EJ\ dx = [\,x - x^2/b + 1/3\,x^3/b^2\,]_o^b\ 1/EJ$

$= (\,b - b + 1/3\,b\,)\ 1/EJ = 1/3\ b/EJ$

$L^{XX}_{IH} = \int_o^b (\,x^2/b^2\,)\ 1/EJ\ dx = [1/3\,x^3/b^2\,]_o^b\ 1/EJ$

$= (1/3\,b)\ 1/EJ = 1/3\ b/EJ$

$L^{XX}_{HG} = \int_o^b (1)\ 1/EJ\ dx = [\,x\,]_o^b\ 1/EJ$

$= (\,b\,)\ 1/EJ = b/EJ$

$L^{XX}_{GH} = \int_o^b (1)\ 1/EJ\ dx = [\,x\,]_o^b\ 1/EJ$

$= (\,b\,)\ 1/EJ = b/EJ$

$L^{Xo}_{GA} = \int_o^b (3/2\,x/b - 3/2\,x^2/b^2)\ Fb\ 1/EJ\ dx = [3/4\,x^2/b - 1/2\,x^3/b^2\,]_o^b\ Fb\ 1/EJ$

$= (3/4\,b - 1/2\,b)\ Fb\ 1/EJ = 1/4\ Fb^2/EJ$

$L^{Xo}_{AG} = \int_o^b (3/2\,x/b - 3/2\,x^2/b^2)\ Fb\ 1/EJ\ dx = [3/4\,x^2/b - 1/2\,x^3/b^2\,]_o^b\ Fb\ 1/EJ$

$= (3/4\,b - 1/2\,b)\ Fb\ 1/EJ = 1/4\ Fb^2/EJ$

$L^{Xo}_{HI} = \int_o^b (1/2 - x/b + 1/2\,x^2/b^2)\ Fb\ 1/EJ\ dx = [1/2\,x - 1/2\,x^2/b + 1/6\,x^3/b^2\,]_o^b\ Fb\ 1/EJ$

$= (1/2\,b - 1/2\,b + 1/6\,b)\ Fb\ 1/EJ = 1/6\ Fb^2/EJ$

$L^{Xo}_{IH} = \int_o^b (1/2\,x^2/b^2)\ Fb\ 1/EJ\ dx = [1/6\,x^3/b^2\,]_o^b\ Fb\ 1/EJ$

$= (1/6\,b)\ Fb\ 1/EJ = 1/6\ Fb^2/EJ$

$L^{Xo}_{HG} = \int_o^b (1/2 - 1/2\,x/b)\ Fb\ 1/EJ\ dx - 1\ \ (-1)\ \ (-1)\ \ Fb^2/EJ$

$= [1/2\,x - 1/4\,x^2/b\,]_o^b\ Fb\ 1/EJ\ - 1\ \ (-1)\ \ (-1)\ \ Fb^2/EJ$

$= (1/2\,b - 1/4\,b)\ Fb\ 1/EJ\ - 1\ \ (-1)\ \ (-1)\ \ Fb^2/EJ = -3/4\ \ Fb^2/EJ$

$L^{Xo}_{GH} = \int_o^b (1/2\,x/b)\ Fb\ 1/EJ\ dx - 1\ \ (-1)\ \ (-1)\ \ Fb^2/EJ = [1/4\,x^2/b\,]_o^b\ Fb\ 1/EJ\ - 1\ \ (-1)\ \ (-1)\ \ Fb^2/EJ$

$= (1/4\,b)\ Fb\ 1/EJ\ - 1\ \ (-1)\ \ (-1)\ \ Fb^2/EJ = -3/4\ \ Fb^2/EJ$

PROCEDIMENTO E RISULTATI 239106 ESΣ05.xxxx.106

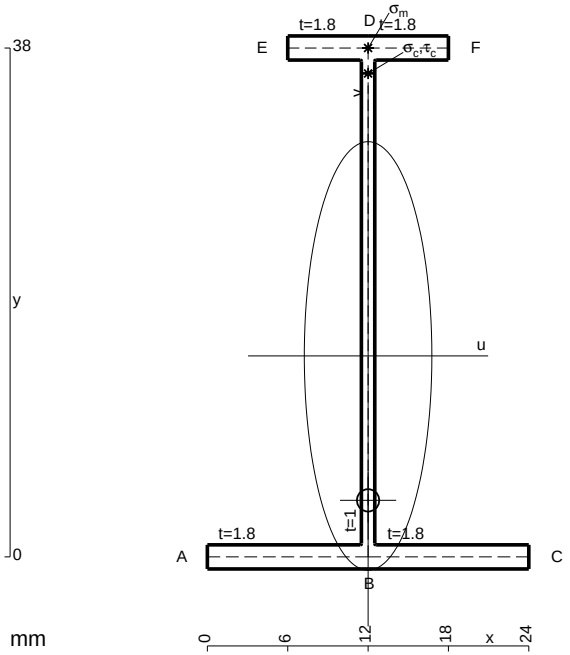

A = 102.8 mm^2
J_u = 26327. mm^4
J_v = 2333. mm^4
J_t = 82.65 mm^4
y_o = -10.79 mm
y_g = 15.01 mm
N = -155. N
T_y = 620. N
M_x = -237150. Nmm
x_m = 12. mm
y_m = 38. mm
v_m = 22.99 mm
$\sigma_m = N/A - Mv/J_u$ = 205.6 N/mm^2
y_c = 2. mm
u_c = -12. mm
v_c = -13.01 mm
$\sigma_c = N/A - Mv/J_u$ = 205.6 N/mm^2
$\tau_c = TS^*/tJ_u$ = 11.7 N/mm^2
$\tau_g = TS^*/tJ_u$ = 11.7 N/mm^2
t_c = 310. mm
$\sigma_o = \sqrt{\sigma^2 + 3\tau^2}$ = 206.6 N/mm^2

ESΣ05.xxxx.106

@ Adolfo Zavelani Rossi, Politecnico di Milano, vers.27.03.13 01.12.25

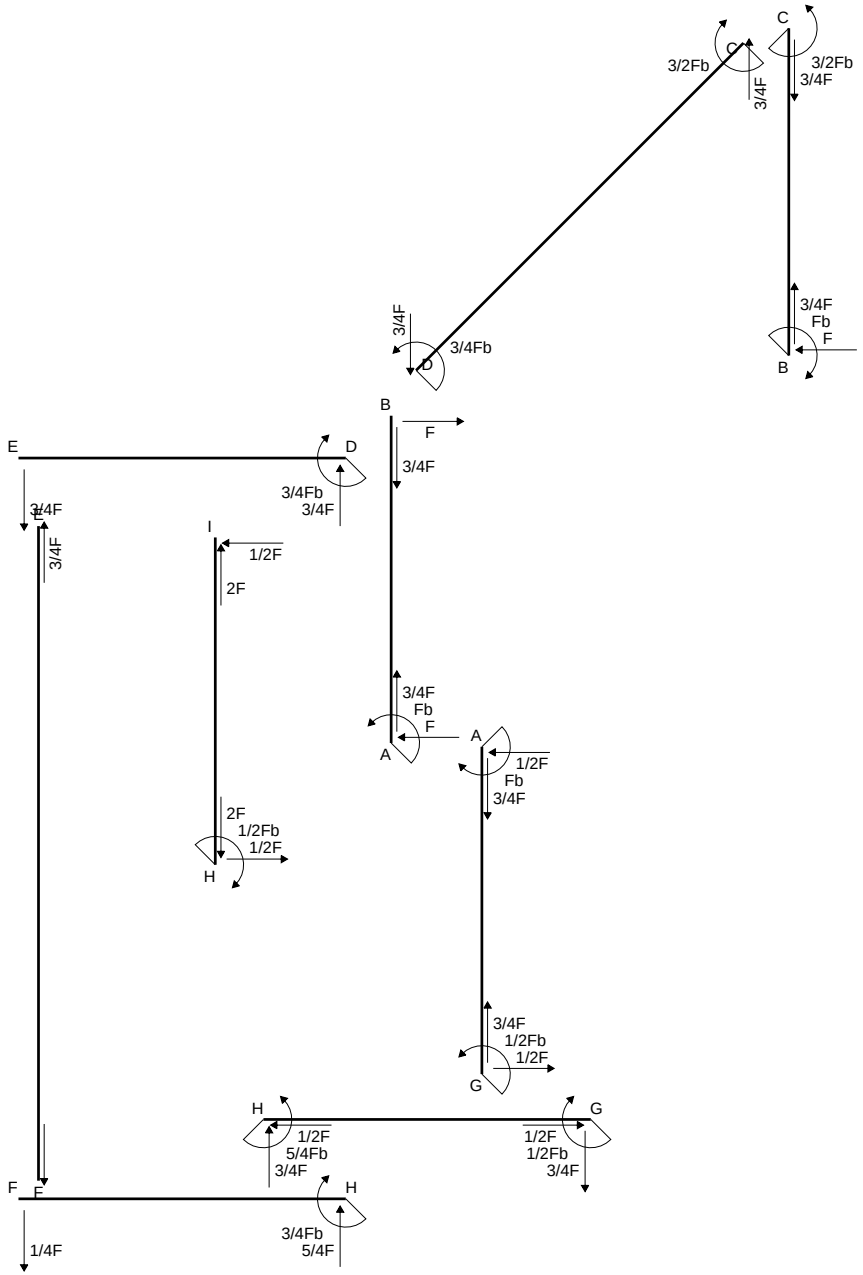
C
C
3/2Fb
3/2Fb
3/4F
3/4F
3/4F
Fb
F
B
3/4F
3/4Fb
D
B
F
3/4F
E
D
3/4Fb
3/4F
E
3/4F
3/4F
I
1/2F
2F
3/4F
Fb
F
A
A
1/2F
Fb
3/4F
2F
1/2Fb
1/2F
H
3/4F
1/2Fb
1/2F
G
H
1/2F
5/4Fb
3/4F
1/2F
1/2Fb
3/4F
G
F
F
H
3/4Fb
5/4F
1/4F

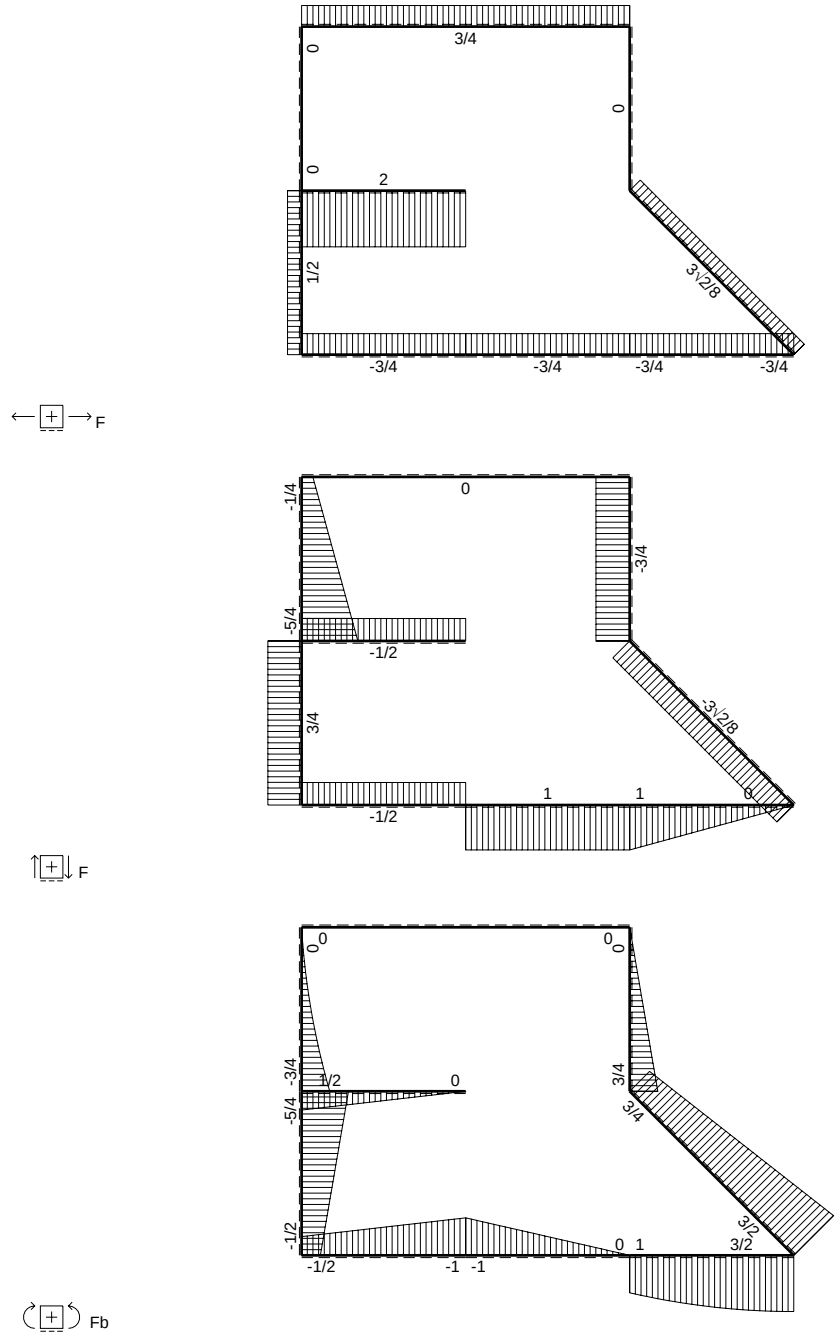
3/4
0
0
0
2
1/2
3√2/8
-3/4
-3/4
-3/4
-3/4
F
-1/4
0
-3/4
-5/4
-1/2
3/4
-3√2/8
1
1
0
-1/2
F
0
0
0
0
-3/4
-5/4
1/2
0
3/4
3/4
3√2/2
-1/2
-1
-1
0
1
3/2
Fb

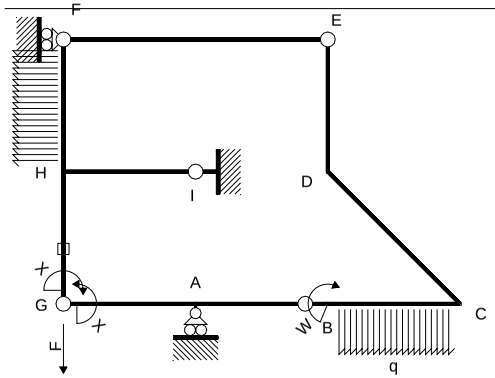

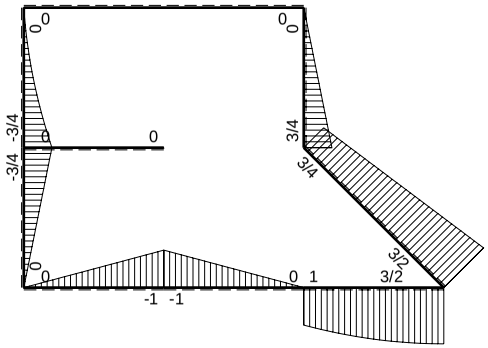

M_0 flessione da carichi assegnati

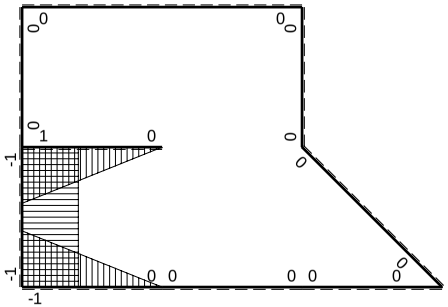

M_x flessione da iperstatica X=1

Quadro contributi PLV per iperstatica $X=W_{GA}$

→	$M_x(x)$	$M_0(x)$	M_xM_0	M_xM_x	$\int M_xM_0/EJdx$	$\int XM_xM_x/EJdx$
AB b	0	-Fb+Fx	0	0	0	0
BA b	0	Fx	0	0		
BC b	0	$Fb+Fx-1/2qx^2$	0	0	0	0
CB b	0	$-3/2Fb+1/2qx^2$	0	0		
CD $\sqrt{2}$b	0	$3/2Fb-3\sqrt{2}/8Fx$	0	0	0	0
DE b	0	3/4Fb-3/4Fx	0	0	0	0
ED b	0	-3/4Fx	0	0		
EF 2b	0	0	0	0	0	0
FE 2b	0	0	0	0		
GA b	-1+x/b	-Fx	$Fx-Fx^2/b$	$1-2x/b+x^2/b^2$	$1/6Fb^2/EJ$	1/3Xb/EJ
AG b	x/b	Fb-Fx	$Fx-Fx^2/b$	x^2/b^2		
FH b	0	$-1/4Fx-1/2qx^2$	0	0	0	0
HF b	0	$3/4Fb-5/4Fx+1/2qx^2$	0	0		
HI b	1-x/b	0	0	$1-2x/b+x^2/b^2$	0	1/3Xb/EJ
IH b	-x/b	0	0	x^2/b^2		
HG b	-1	-3/4Fb+3/4Fx	3/4Fb-3/4Fx	1	$3/8Fb^2/EJ$	Xb/EJ
GH b	1	3/4Fx	3/4Fx	1		
HG	elongazione asta $N_{1HG}\varepsilon_{HG}L_{HG}$				$-Fb^2/EJ$	
A	molla nodo $-V_{1A}(V_{0A}+XV_{1A})/k_A$				$-1/2Fb^2/EJ$	1/4Xb/EJ
	totali				$-23/24Fb^2/EJ$	23/12Xb/EJ
	iperstatica $X=W_{GA}$				1/2Fb	

Sviluppi di calcolo iperstatica

$L^{XX}_{GA} = \int_o^b (1 - 2\,x/b + x^2/b^2)\ 1/EJ\ dx = [\,x - x^2/b + 1/3\,x^3/b^2\,]_o^b\ 1/EJ$

$= (\,b - b + 1/3\,b\,)\ 1/EJ = 1/3\ b/EJ$

$L^{XX}_{AG} = \int_o^b (\,x^2/b^2\,)\ 1/EJ\ dx = [1/3\,x^3/b^2\,]_o^b\ 1/EJ$

$= (1/3\,b\,)\ 1/EJ = 1/3\ b/EJ$

$L^{XX}_{HI} = \int_o^b (1 - 2\,x/b + x^2/b^2)\ 1/EJ\ dx = [\,x - x^2/b + 1/3\,x^3/b^2\,]_o^b\ 1/EJ$

$= (\,b - b + 1/3\,b\,)\ 1/EJ = 1/3\ b/EJ$

$L^{XX}_{IH} = \int_o^b (\,x^2/b^2\,)\ 1/EJ\ dx = [1/3\,x^3/b^2\,]_o^b\ 1/EJ$

$= (1/3\,b\,)\ 1/EJ = 1/3\ b/EJ$

$L^{XX}_{HG} = \int_o^b (1)\ 1/EJ\ dx = [\,x\,]_o^b\ 1/EJ$

$= (\,b\,)\ 1/EJ = b/EJ$

$L^{XX}_{GH} = \int_o^b (1)\ 1/EJ\ dx = [\,x\,]_o^b\ 1/EJ$

$= (\,b\,)\ 1/EJ = b/EJ$

$L^{Xo}_{GA} = \int_o^b (\,x/b - x^2/b^2\,)\ Fb\ 1/EJ\ dx = [1/2\,x^2/b - 1/3\,x^3/b^2\,]_o^b\ Fb\ 1/EJ$

$= (1/2\,b - 1/3\,b\,)\ Fb\ 1/EJ = 1/6\ Fb^2/EJ$

$L^{Xo}_{AG} = \int_o^b (\,x/b - x^2/b^2\,)\ Fb\ 1/EJ\ dx = [1/2\,x^2/b - 1/3\,x^3/b^2\,]_o^b\ Fb\ 1/EJ$

$= (1/2\,b - 1/3\,b\,)\ Fb\ 1/EJ = 1/6\ Fb^2/EJ$

$L^{Xo}_{HG} = \int_o^b (3/4 - 3/4\,x/b\,)\ Fb\ 1/EJ\ dx - 1\ \ (-1)\ \ (-1)\ \ Fb^2/EJ$

$= [3/4\,x - 3/8\,x^2/b\,]_o^b\ Fb\ 1/EJ\ -\ 1\ \ (-1)\ \ (-1)\ \ Fb^2/EJ$

$= (3/4\,b - 3/8\,b\,)\ Fb\ 1/EJ\ -\ 1\ \ (-1)\ \ (-1)\ \ Fb^2/EJ = -5/8\ \ Fb^2/EJ$

$L^{Xo}_{GH} = \int_o^b (3/4\,x/b\,)\ Fb\ 1/EJ\ dx - 1\ \ (-1)\ \ (-1)\ \ Fb^2/EJ = [3/8\,x^2/b\,]_o^b\ Fb\ 1/EJ\ -\ 1\ \ (-1)\ \ (-1)\ \ Fb^2/EJ$

$= (3/8\,b\,)\ Fb\ 1/EJ\ -\ 1\ \ (-1)\ \ (-1)\ \ Fb^2/EJ = -5/8\ \ Fb^2/EJ$

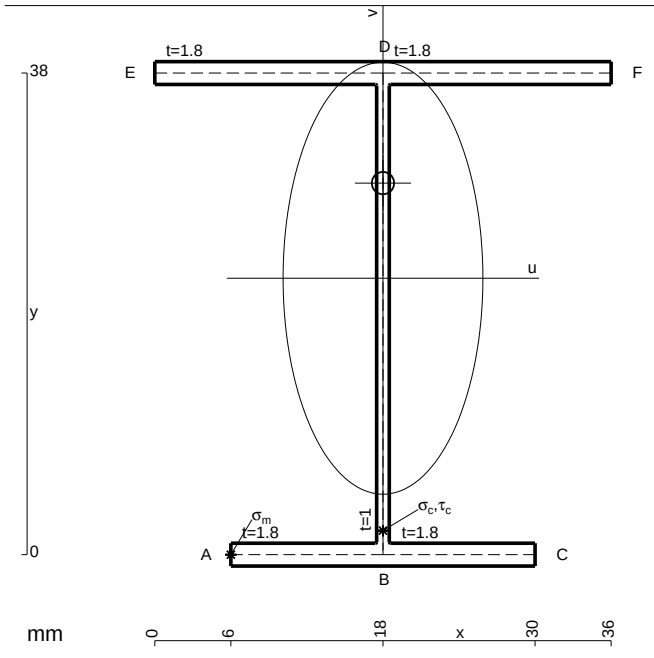

A = 146. mm^2
J_u = 42407. mm^4
J_v = 9072. mm^4
J_t = 129.3 mm^4
y_o = 7.503 mm
y_g = 21.81 mm
N = -577.5 N
T_y = 770. N
M_x = -415800. Nmm
x_m = 6. mm
u_m = -12. mm
v_m = -21.81 mm
$\sigma_m = N/A - Mv/J_u$ = -217.8 N/mm^2
x_c = 18. mm
v_c = -21.81 mm
$\sigma_c = N/A - Mv/J_u$ = -217.8 N/mm^2
$\tau_c = TS^*/tJ_u$ = 17.11 N/mm^2
$\tau_g = TS^*/tJ_u$ = 17.11 N/mm^2
t_c = 770. mm
$\sigma_o = \sqrt{\sigma^2 + 3\tau^2}$ = 219.8 N/mm^2

ESΣ05.xxxx.107

@ Adolfo Zavelani Rossi, Politecnico di Milano, vers.27.03.13 01.12.25

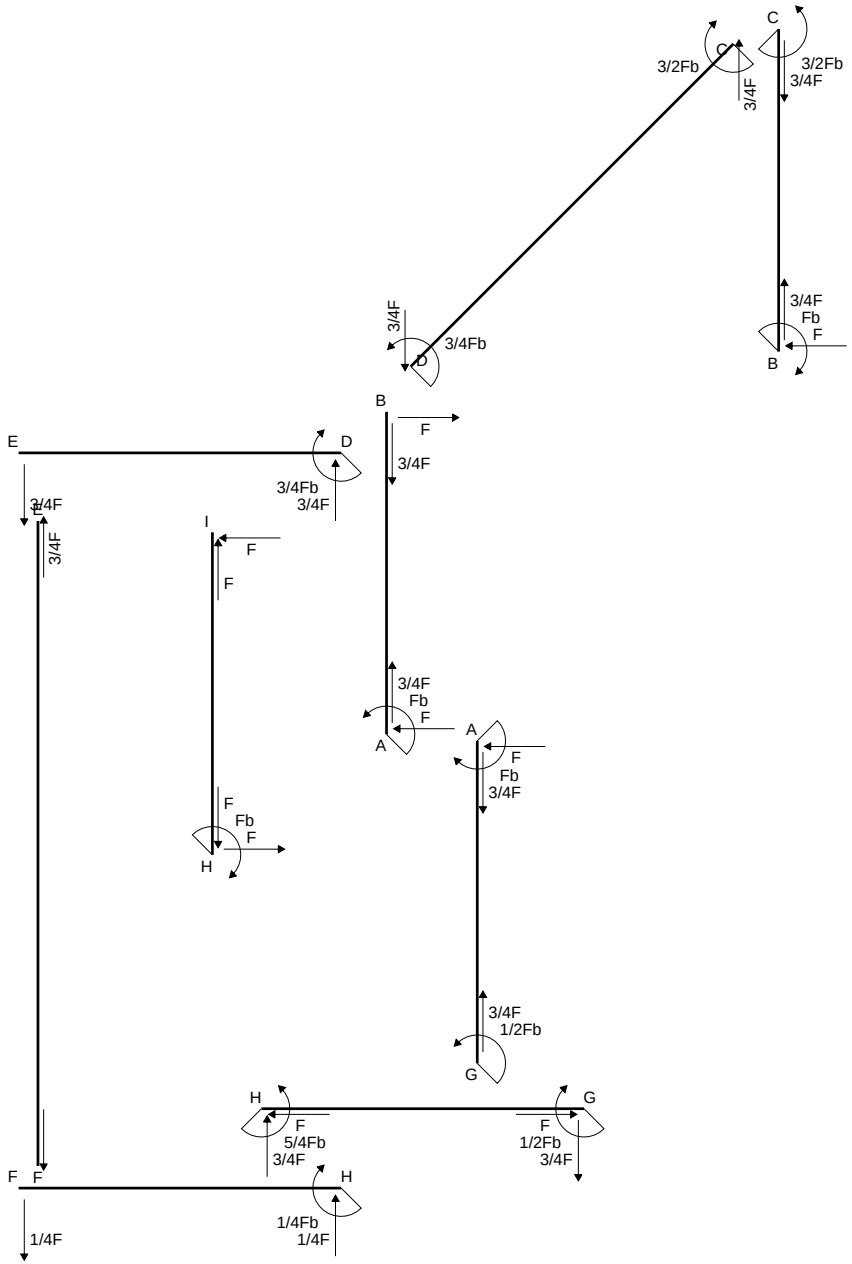
C
3/2Fb
C
3/4F
3/2Fb
3/4F
3/4F
3/4Fb
D
3/4F
Fb
F
B
B
F
3/4F
E
D
3/4Fb
3/4F
3/4F
I
F
F
3/4F
Fb
F
A
A
F
Fb
3/4F
F
Fb
F
H
3/4F
1/2Fb
G
H
F
5/4Fb
3/4F
G
F
1/2Fb
3/4F
F
F
H
1/4Fb
1/4F
1/4F

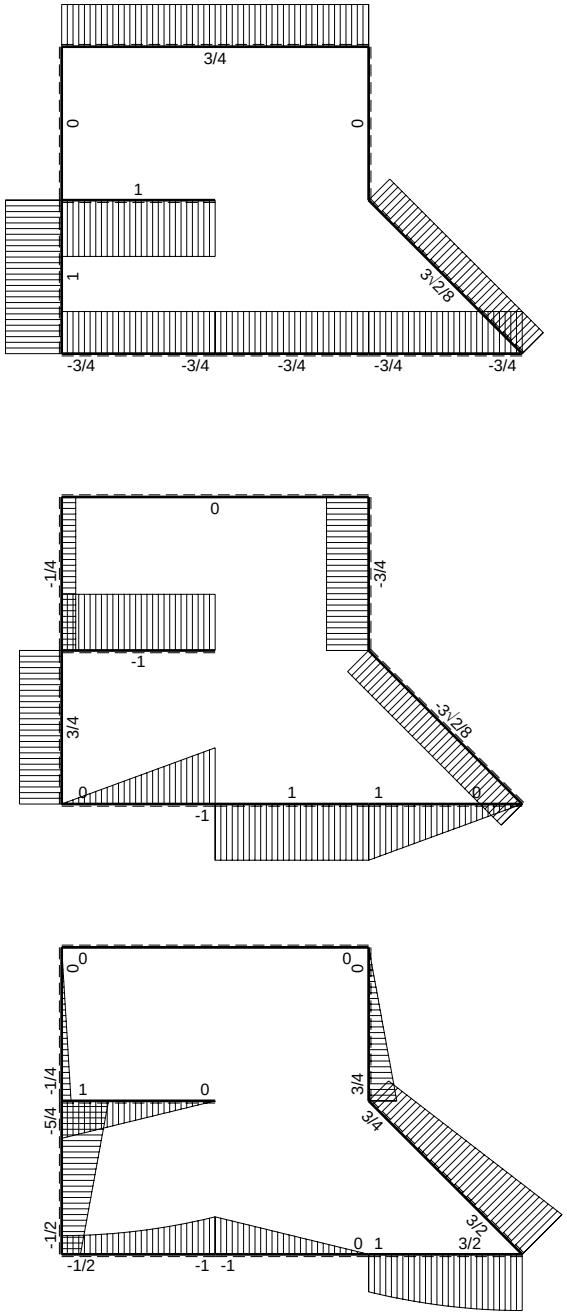
3/4
0
0
1
1
3√2/8
-3/4
-3/4
-3/4
-3/4
-3/4
F
0
-1/4
-3/4
-1
3/4
-3√2/8
0
1
1
0
-1
F
0
0
0
0
-5/4
-1/4
1
0
3/4
3/4
3/2
-1/2
0
1
3/2
-1/2
-1
-1
Fb

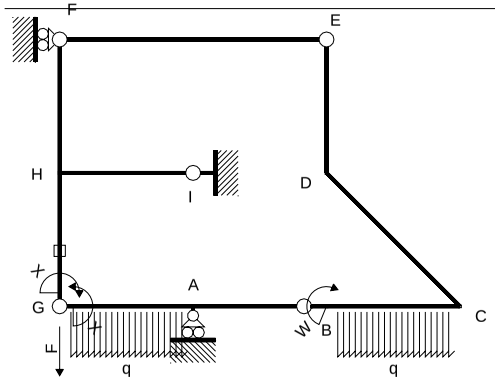

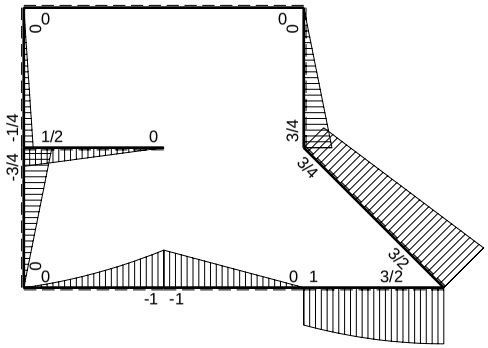

M_0 flessione da carichi assegnati

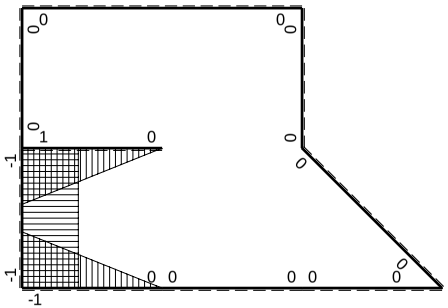

M_x flessione da iperstatica X=1

Quadro contributi PLV per iperstatica $X=W_{GA}$

→	$M_x(x)$	$M_o(x)$	M_xM_o	M_xM_x	$\int M_xM_o/EJdx$	$\int XM_xM_x/EJdx$
AB b	0	-Fb+Fx	0	0	0	0
BA b	0	Fx	0	0		
BC b	0	$Fb+Fx-1/2qx^2$	0	0	0	0
CB b	0	$-3/2Fb+1/2qx^2$	0	0		
CD √2b	0	3/2Fb-3√2/8Fx	0	0	0	0
DE b	0	3/4Fb-3/4Fx	0	0	0	0
ED b	0	-3/4Fx	0	0		
EF 2b	0	0	0	0	0	0
FE 2b	0	0	0	0		
GA b	-1+x/b	$-1/2Fx-1/2qx^2$	$1/2Fx-1/2qx^3/b$	$1-2x/b+x^2/b^2$	$1/8Fb^2/EJ$	$1/3Xb/EJ$
AG b	x/b	$Fb-3/2Fx+1/2qx^2$	$Fx-3/2Fx^2/b+1/2qx^3/b$	x^2/b^2		
FH b	0	-1/4Fx	0	0	0	0
HF b	0	1/4Fb-1/4Fx	0	0		
HI b	1-x/b	1/2Fb-1/2Fx	$1/2Fb-Fx+1/2Fx^2/b$	$1-2x/b+x^2/b^2$	$1/6Fb^2/EJ$	$1/3Xb/EJ$
IH b	-x/b	-1/2Fx	$1/2Fx^2/b$	x^2/b^2		
HG b	-1	-3/4Fb+3/4Fx	3/4Fb-3/4Fx	1	$3/8Fb^2/EJ$	Xb/EJ
GH b	1	3/4Fx	3/4Fx	1		
HG	elongazione asta $N_{1HG}\varepsilon_{HG}L_{HG}$				$-Fb^2/EJ$	
A	molla nodo $-V_{1A}(V_{0A}+XV_{1A})/k_A$				$-5/8Fb^2/EJ$	$1/4Xb/EJ$
	totali				$-23/24Fb^2/EJ$	$23/12Xb/EJ$
	iperstatica $X=W_{GA}$				1/2Fb	

Sviluppi di calcolo iperstatica

$L^{XX}_{GA} = \int_o^b (1 - 2\,x/b + x^2/b^2)\ 1/EJ\ dx = [\,x - x^2/b + 1/3\,x^3/b^2\,]_o^b\ 1/EJ$

$= (\,b - b + 1/3\,b\,)\ 1/EJ\ = 1/3\ b/EJ$

$L^{XX}_{AG} = \int_o^b (\,x^2/b^2\,)\ 1/EJ\ dx = [1/3\,x^3/b^2\,]_o^b\ 1/EJ$

$= (1/3\,b\,)\ 1/EJ\ = 1/3\ b/EJ$

$L^{XX}_{HI} = \int_o^b (1 - 2\,x/b + x^2/b^2)\ 1/EJ\ dx = [\,x - x^2/b + 1/3\,x^3/b^2\,]_o^b\ 1/EJ$

$= (\,b - b + 1/3\,b\,)\ 1/EJ\ = 1/3\ b/EJ$

$L^{XX}_{IH} = \int_o^b (\,x^2/b^2\,)\ 1/EJ\ dx = [1/3\,x^3/b^2\,]_o^b\ 1/EJ$

$= (1/3\,b\,)\ 1/EJ\ = 1/3\ b/EJ$

$L^{XX}_{HG} = \int_o^b (1)\ 1/EJ\ dx = [\,x\,]_o^b\ 1/EJ$

$= (\,b\,)\ 1/EJ\ =\ b/EJ$

$L^{XX}_{GH} = \int_o^b (1)\ 1/EJ\ dx = [\,x\,]_o^b\ 1/EJ$

$= (\,b\,)\ 1/EJ\ =\ b/EJ$

$L^{Xo}_{GA} = \int_o^b (1/2\,x/b - 1/2\,x^3/b^3)\ Fb\ 1/EJ\ dx = [1/4\,x^2/b - 1/8\,x^4/b^3\,]_o^b\ Fb\ 1/EJ$

$= (1/4\,b - 1/8\,b\,)\ Fb\ 1/EJ\ = 1/8\ Fb^2/EJ$

$L^{Xo}_{AG} = \int_o^b (\,x/b - 3/2\,x^2/b^2 + 1/2\,x^3/b^3\,)\ Fb\ 1/EJ\ dx = [1/2\,x^2/b - 1/2\,x^3/b^2 + 1/8\,x^4/b^3\,]_o^b\ Fb\ 1/EJ$

$= (1/2\,b - 1/2\,b + 1/8\,b\,)\ Fb\ 1/EJ\ = 1/8\ Fb^2/EJ$

$L^{Xo}_{HI} = \int_o^b (1/2 - x/b + 1/2\,x^2/b^2\,)\ Fb\ 1/EJ\ dx = [1/2\,x - 1/2\,x^2/b + 1/6\,x^3/b^2\,]_o^b\ Fb\ 1/EJ$

$= (1/2\,b - 1/2\,b + 1/6\,b\,)\ Fb\ 1/EJ\ = 1/6\ Fb^2/EJ$

$L^{Xo}_{IH} = \int_o^b (1/2\,x^2/b^2\,)\ Fb\ 1/EJ\ dx = [1/6\,x^3/b^2\,]_o^b\ Fb\ 1/EJ$

$= (1/6\,b\,)\ Fb\ 1/EJ\ = 1/6\ Fb^2/EJ$

$L^{Xo}_{HG} = \int_o^b (3/4 - 3/4\,x/b\,)\ Fb\ 1/EJ\ dx - 1\ \ (-1)\ \ (-1)\ \ Fb^2/EJ$

$= [3/4\,x - 3/8\,x^2/b\,]_o^b\ Fb\ 1/EJ\ - 1\ \ (-1)\ \ (-1)\ \ Fb^2/EJ$

$= (3/4\,b - 3/8\,b\,)\ Fb\ 1/EJ\ - 1\ \ (-1)\ \ (-1)\ \ Fb^2/EJ = -5/8\ \ Fb^2/EJ$

$L^{Xo}_{GH} = \int_o^b (3/4\,x/b\,)\ Fb\ 1/EJ\ dx - 1\ \ (-1)\ \ (-1)\ \ Fb^2/EJ = [3/8\,x^2/b\,]_o^b\ Fb\ 1/EJ\ - 1\ \ (-1)\ \ (-1)\ \ Fb^2/EJ$

$= (3/8\,b\,)\ Fb\ 1/EJ\ - 1\ \ (-1)\ \ (-1)\ \ Fb^2/EJ = -5/8\ \ Fb^2/EJ$

PROCEDIMENTO E RISULTATI 237985 ESΣ05.xxxx.108

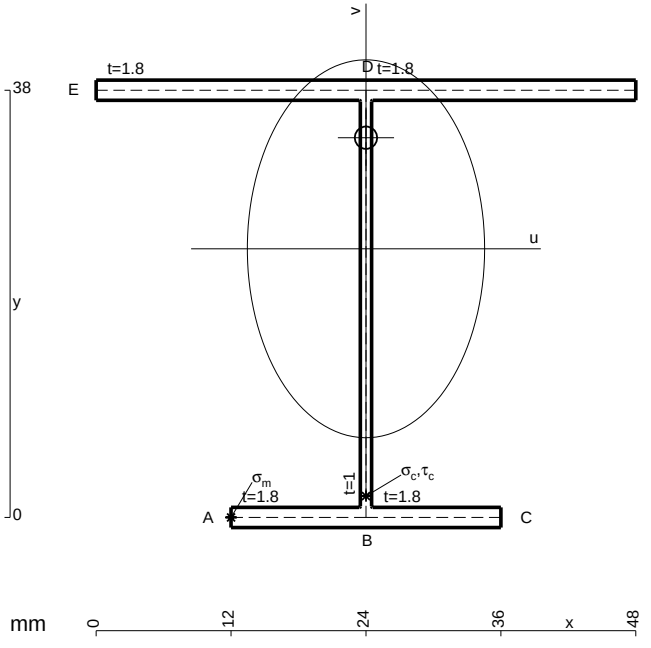

A = 167.6 mm^2
J_u = 47339. mm^4
J_v = 18662. mm^4
J_t = 152.6 mm^4
y_o = 9.88 mm
y_g = 23.9 mm
N = -585. N
T_y = 780. N
M_x = -444600. Nmm
x_m = 12. mm
u_m = -12. mm
v_m = -23.9 mm
$\sigma_m = N/A - Mv/J_u$ = -227.9 N/mm^2
x_c = 24. mm
v_c = -23.9 mm
$\sigma_c = N/A - Mv/J_u$ = -227.9 N/mm^2
$\tau_c = TS^*/tJ_u$ = 17.01 N/mm^2
$\tau_g = TS^*/tJ_u$ = 17.01 N/mm^2
t_c = 780. mm
$\sigma_o = \sqrt{\sigma^2 + 3\tau^2}$ = 229.8 N/mm^2

@ Adolfo Zavelani Rossi, Politecnico di Milano, vers.27.03.13 01.12.25

ESΣ05.xxxx.108

@ Adolfo Zavelani Rossi, Politecnico di Milano, vers.27.03.13 01.12.25

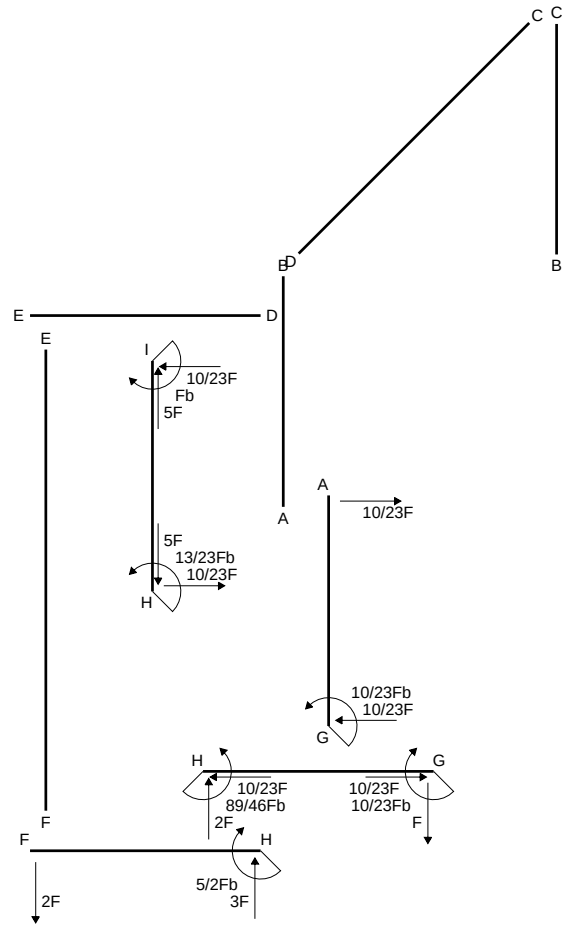
C C
B D
B
E D
E
I
10/23F
Fb
5F
A
A
10/23F
5F
13/23Fb
10/23F
H
10/23Fb
10/23F
G
H
G
10/23F
89/46Fb
2F
10/23F
10/23Fb
F
F
F
H
5/2Fb
3F
2F

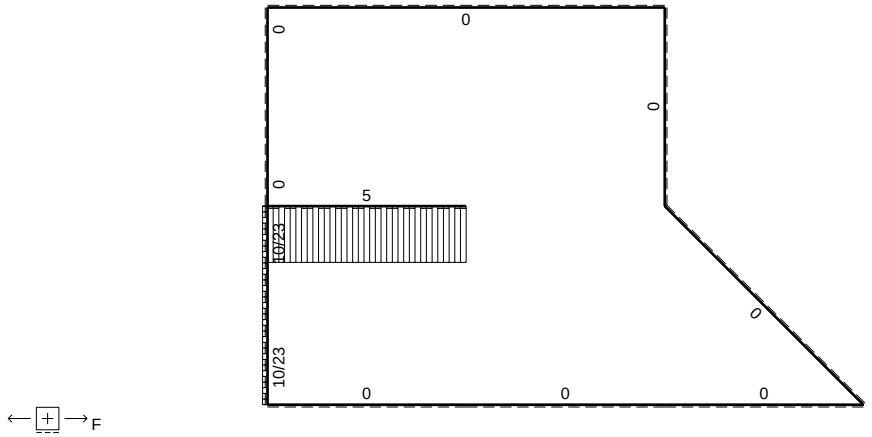
F
0
0
0
0
5
10/23
0
10/23
0
0
0

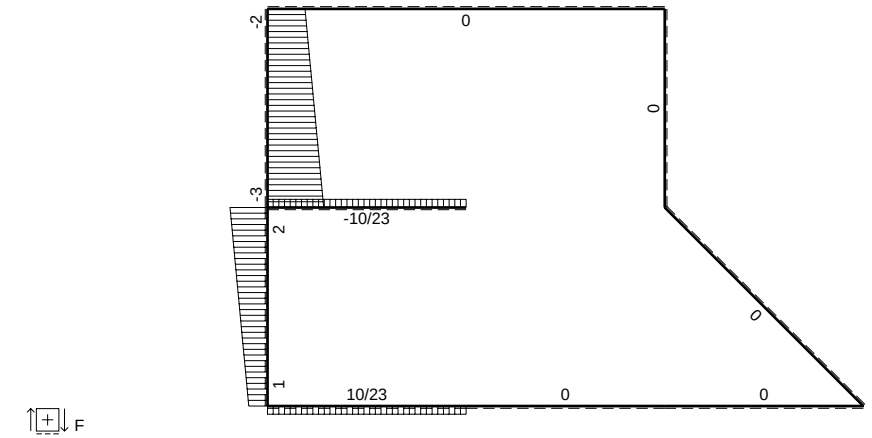
F
-2
0
0
-3
-10/23
2
0
1
10/23
0
0

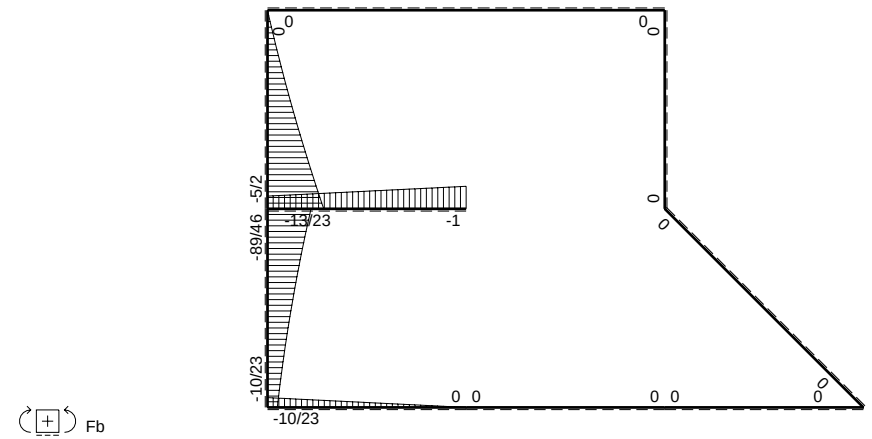
Fb
0
0
0
0
-5/2
-89/46
-10/23
-13/23
-1
0
0
0 0
0 0
0
-10/23

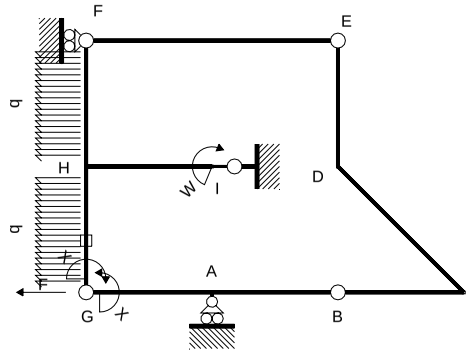

Schema di calcolo iperstatico

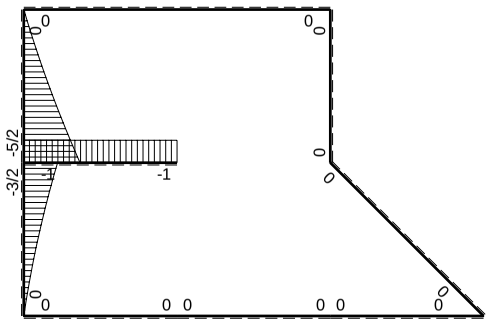

M_0 flessione da carichi assegnati

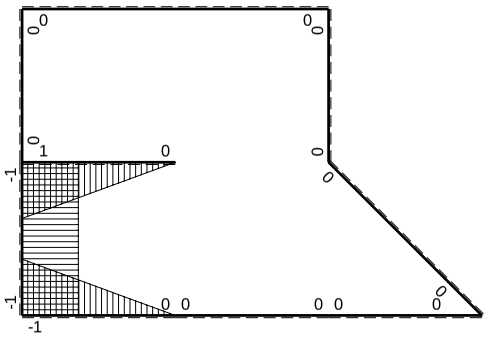

M_x flessione da iperstatica X=1

Quadro contributi PLV per iperstatica $X=W_{GA}$

→	$M_x(x)$	$M_0(x)$	M_xM_0	M_xM_x	$\int M_xM_0/EJdx$	$\int XM_xM_x/EJdx$
AB b	0	0	0	0	0	0
BA b	0	0	0	0		
BC b	0	0	0	0	0	0
CB b	0	0	0	0		
CD $\sqrt{2}$b	0	0	0	0	0	0
DE b	0	0	0	0	0	0
ED b	0	0	0	0		
EF 2b	0	0	0	0	0	0
FE 2b	0	0	0	0		
GA b	-1+x/b	0	0	$1-2x/b+x^2/b^2$	0	1/3Xb/EJ
AG b	x/b	0	0	x^2/b^2		
FH b	0	$-2Fx-1/2qx^2$	0	0	0	0
HF b	0	$5/2Fb-3Fx+1/2qx^2$	0	0		
HI b	1-x/b	-Fb	-Fb+Fx	$1-2x/b+x^2/b^2$	$-1/2Fb^2/EJ$	1/3Xb/EJ
IH b	-x/b	Fb	-Fx	x^2/b^2		
HG b	-1	$-3/2Fb+2Fx-1/2qx^2$	$3/2Fb-2Fx+1/2Fx^2/b$	1	$2/3Fb^2/EJ$	Xb/EJ
GH b	1	$Fx+1/2qx^2$	$Fx+1/2Fx^2/b$	1		
HG	elongazione asta $N_{1HG}\varepsilon_{HG}L_{HG}$				$-Fb^2/EJ$	
A	molla nodo $-V_{1A}(V_{0A}+XV_{1A})/k_A$					1/4Xb/EJ
	totali				$-5/6Fb^2/EJ$	23/12Xb/EJ
	iperstatica $X=W_{GA}$				10/23Fb	

Sviluppi di calcolo iperstatica

$L^{XX}_{GA} = \int_o^b (1 - 2\,x/b + x^2/b^2)\ 1/EJ\ dx = [\ x - x^2/b + 1/3\ x^3/b^2\ ]_o^b\ 1/EJ$

$= (\ b - b + 1/3\ b\ )\ 1/EJ\ = 1/3\ b/EJ$

$L^{XX}_{AG} = \int_o^b (\ x^2/b^2\ )\ 1/EJ\ dx = [1/3\ x^3/b^2\ ]_o^b\ 1/EJ$

$= (1/3\ b\ )\ 1/EJ\ = 1/3\ b/EJ$

$L^{XX}_{HI} = \int_o^b (1 - 2\,x/b + x^2/b^2)\ 1/EJ\ dx = [\ x - x^2/b + 1/3\ x^3/b^2\ ]_o^b\ 1/EJ$

$= (\ b - b + 1/3\ b\ )\ 1/EJ\ = 1/3\ b/EJ$

$L^{XX}_{IH} = \int_o^b (\ x^2/b^2\ )\ 1/EJ\ dx = [1/3\ x^3/b^2\ ]_o^b\ 1/EJ$

$= (1/3\ b\ )\ 1/EJ\ = 1/3\ b/EJ$

$L^{XX}_{HG} = \int_o^b (1\ )\ 1/EJ\ dx = [\ x\ ]_o^b\ 1/EJ$

$= (\ b\ )\ 1/EJ\ =\ b/EJ$

$L^{XX}_{GH} = \int_o^b (1\ )\ 1/EJ\ dx = [\ x\ ]_o^b\ 1/EJ$

$= (\ b\ )\ 1/EJ\ =\ b/EJ$

$L^{Xo}_{HI} = \int_o^b (-1 + x/b\ )\ Fb\ 1/EJ\ dx = [-\ x + 1/2\ x^2/b\ ]_o^b\ Fb\ 1/EJ$

$= (-\ b + 1/2\ b\ )\ Fb\ 1/EJ\ = -1/2\ \ Fb^2/EJ$

$L^{Xo}_{IH} = \int_o^b (-\ x/b\ )\ Fb\ 1/EJ\ dx = [-1/2\ x^2/b\ ]_o^b\ Fb\ 1/EJ$

$= (-1/2\ b\ )\ Fb\ 1/EJ\ = -1/2\ \ Fb^2/EJ$

$L^{Xo}_{HG} = \int_o^b (3/2 - 2\,x/b + 1/2\ x^2/b^2\ )\ Fb\ 1/EJ\ dx - 1\ \ (-1)\ \ (-1)\ \ Fb^2/EJ$

$= [3/2\ x - x^2/b + 1/6\ x^3/b^2\ ]_o^b\ Fb\ 1/EJ\ - 1\ \ (-1)\ \ (-1)\ \ Fb^2/EJ$

$= (3/2\ b - b + 1/6\ b\ )\ Fb\ 1/EJ\ - 1\ \ (-1)\ \ (-1)\ \ Fb^2/EJ = -1/3\ \ Fb^2/EJ$

$L^{Xo}_{GH} = \int_o^b (\ x/b + 1/2\ x^2/b^2\ )\ Fb\ 1/EJ\ dx - 1\ \ (-1)\ \ (-1)\ \ Fb^2/EJ$

$= [1/2\ x^2/b + 1/6\ x^3/b^2\ ]_o^b\ Fb\ 1/EJ\ - 1\ \ (-1)\ \ (-1)\ \ Fb^2/EJ$

$= (1/2\ b + 1/6\ b\ )\ Fb\ 1/EJ\ - 1\ \ (-1)\ \ (-1)\ \ Fb^2/EJ = -1/3\ \ Fb^2/EJ$

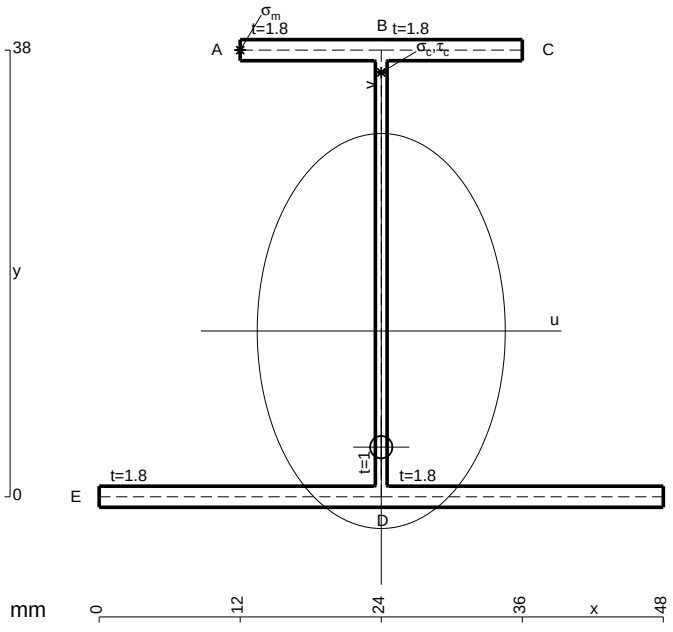

A = 167.6 mm^2
J_u = 47339. mm^4
J_v = 18662. mm^4
J_t = 152.6 mm^4
y_o = -9.88 mm
y_g = 14.1 mm
T_y = -930. N
M_x = -465000. Nmm
x_m = 12. mm
y_m = 38. mm
u_m = -12. mm
v_m = 23.9 mm
$\sigma_m = -Mv/J_u$ = 234.7 N/mm^2
x_c = 24. mm
y_c = 38. mm
v_c = 23.9 mm
$\sigma_c = -Mv/J_u$ = 234.7 N/mm^2
$\tau_c = TS^*/tJ_u$ = 20.28 N/mm^2
$\tau_g = TS^*/tJ_u$ = 20.28 N/mm^2
t_c = 310. mm
$\sigma_o = \sqrt{\sigma^2 + 3\tau^2}$ = 237.4 N/mm^2

ESΣ05.xxxx.109

@ Adolfo Zavelani Rossi, Politecnico di Milano, vers.27.03.13 01.12.25

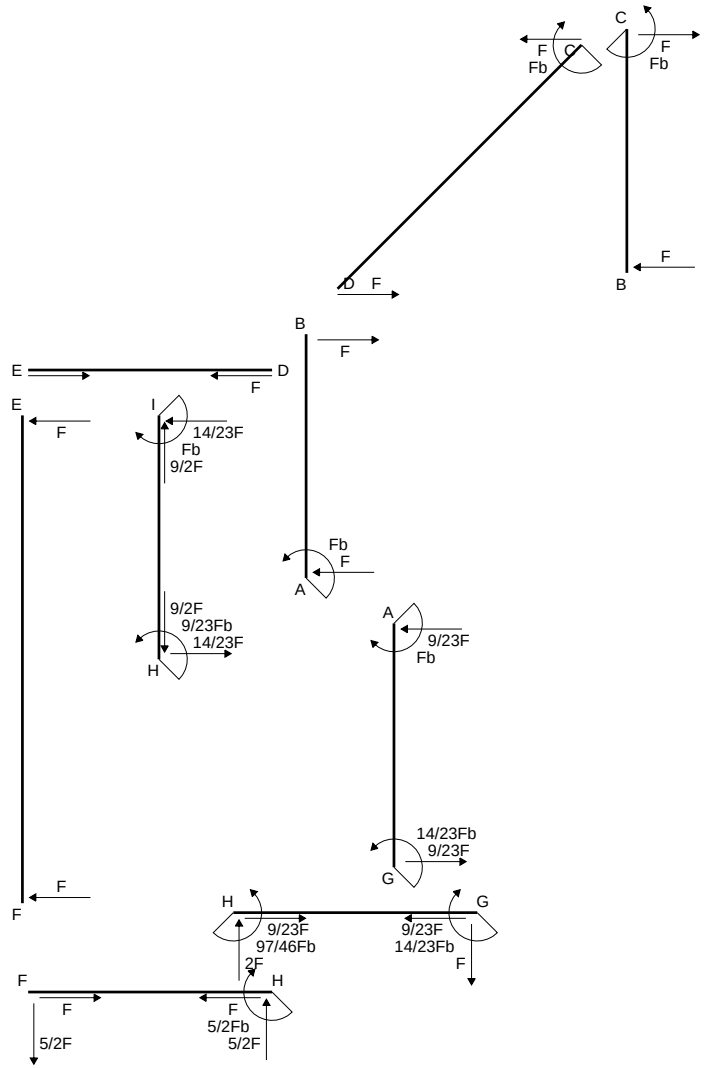
C
F
Fb
C
F
Fb
F
D
F
B
B
F
E
D
F
E
F
I
14/23F
Fb
9/2F
Fb
F
A
9/2F
9/23Fb
14/23F
H
A
9/23F
Fb
14/23Fb
9/23F
G
F
F
H
G
9/23F
97/46Fb
2F
9/23F
14/23Fb
F
F
H
F
F
5/2Fb
5/2F
5/2F

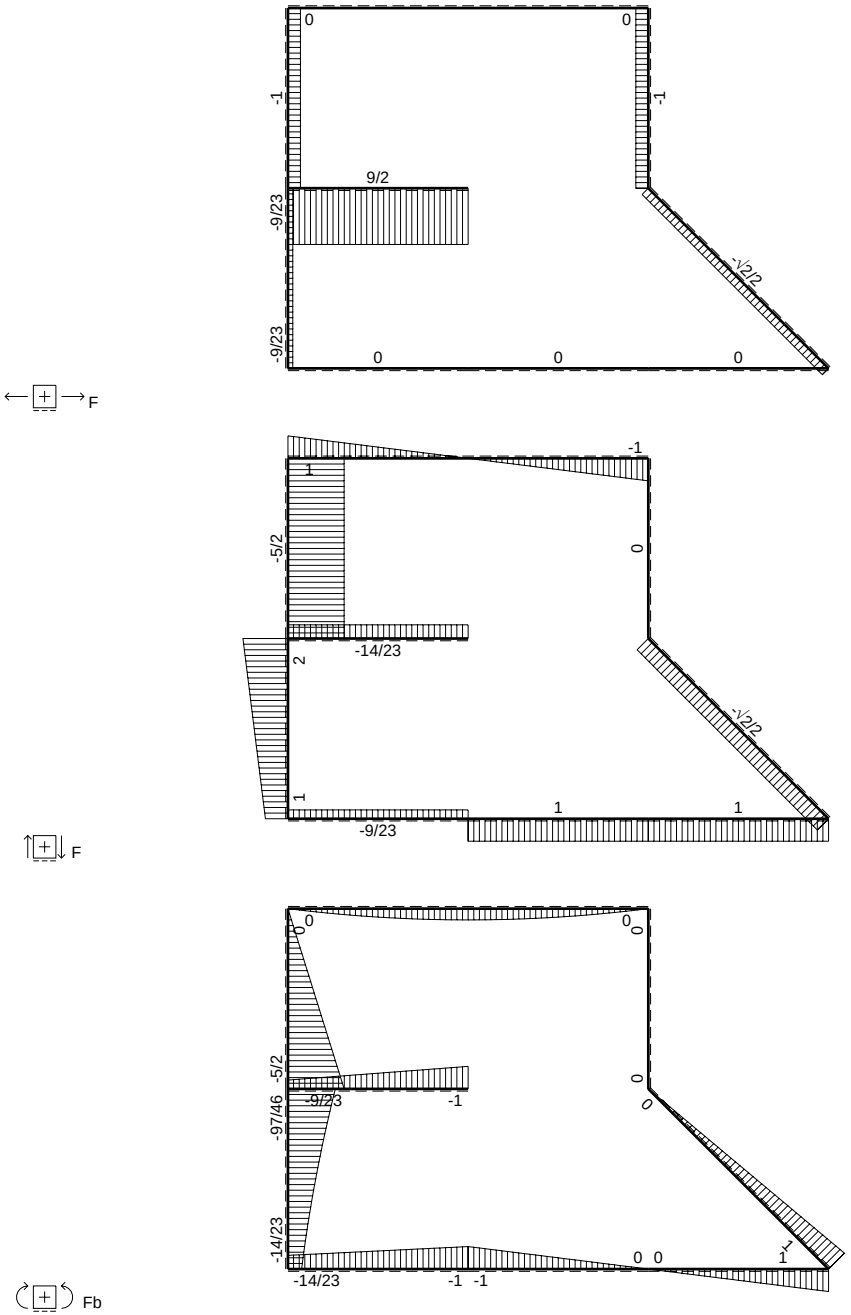
F
0
0
-1
-1
9/2
-9/23
-√2/2
-9/23
0
0
0
F
-1
1
-5/2
0
-14/23
2
-√2/2
1
1
1
-9/23
F
0
0
0
0
-5/2
-9/23
-1
-97/46
0
0
-14/23
1
0 0
1
-14/23
-1 -1
Fb

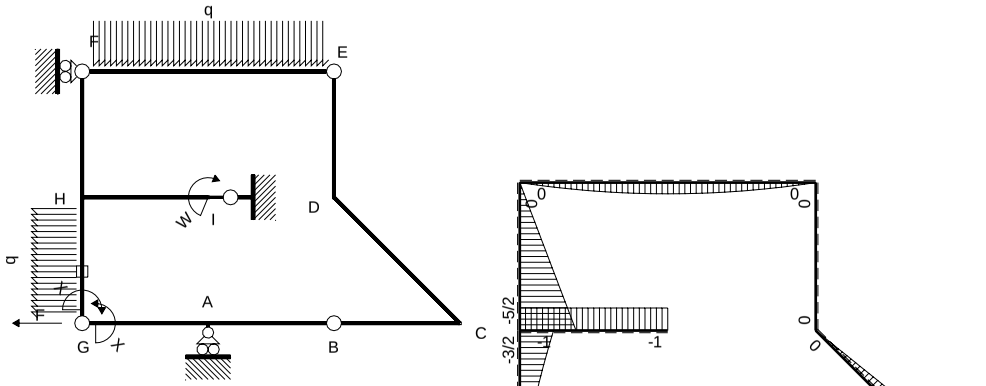

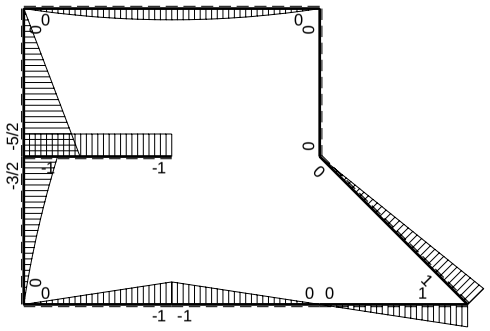

M_0 flessione da carichi assegnati

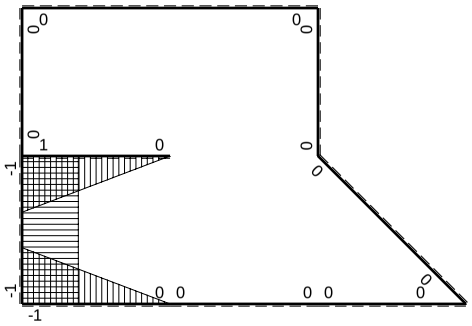

M_x flessione da iperstatica X=1

Quadro contributi PLV per iperstatica $X=W_{GA}$

→	$M_x(x)$	$M_0(x)$	M_xM_0	M_xM_x	$\int M_xM_0/EJdx$	$\int XM_xM_x/EJdx$
AB b	0	-Fb+Fx	0	0	0	0
BA b	0	Fx	0	0		
BC b	0	Fx	0	0	0	0
CB b	0	-Fb+Fx	0	0		
CD √2b	0	Fb-√2/2Fx	0	0	0	0
DE b	0	0	0	0	0	0
ED b	0	0	0	0		
EF 2b	0	$-Fx+1/2qx^2$	0	0	0	0
FE 2b	0	$Fx-1/2qx^2$	0	0		
GA b	-1+x/b	-Fx	$Fx-Fx^2/b$	$1-2x/b+x^2/b^2$	$1/6Fb^2/EJ$	1/3Xb/EJ
AG b	x/b	Fb-Fx	$Fx-Fx^2/b$	x^2/b^2		
FH b	0	-5/2Fx	0	0	0	0
HF b	0	5/2Fb-5/2Fx	0	0		
HI b	1-x/b	-Fb	-Fb+Fx	$1-2x/b+x^2/b^2$	$-1/2Fb^2/EJ$	1/3Xb/EJ
IH b	-x/b	Fb	-Fx	x^2/b^2		
HG b	-1	$-3/2Fb+2Fx-1/2qx^2$	$3/2Fb-2Fx+1/2Fx^2/b$	1	$2/3Fb^2/EJ$	Xb/EJ
GH b	1	$Fx+1/2qx^2$	$Fx+1/2Fx^2/b$	1		
HG	elongazione asta $N_{1HG}\varepsilon_{HG}L_{HG}$				$-Fb^2/EJ$	
A	molla nodo $-V_{1A}(V_{0A}+XV_{1A})/k_A$				$-1/2Fb^2/EJ$	1/4Xb/EJ
	totali				$-7/6Fb^2/EJ$	23/12Xb/EJ
	iperstatica $X=W_{GA}$				14/23Fb	

Sviluppi di calcolo iperstatica

$L^{XX}_{GA} = \int_o^b (1 - 2\,x/b + x^2/b^2)\ 1/EJ\ dx = [\,x - x^2/b + 1/3\,x^3/b^2\,]_o^b\ 1/EJ$

$= (\,b - b + 1/3\,b\,)\ 1/EJ = 1/3\ b/EJ$

$L^{XX}_{AG} = \int_o^b (\,x^2/b^2\,)\ 1/EJ\ dx = [1/3\,x^3/b^2\,]_o^b\ 1/EJ$

$= (1/3\,b\,)\ 1/EJ = 1/3\ b/EJ$

$L^{XX}_{HI} = \int_o^b (1 - 2\,x/b + x^2/b^2)\ 1/EJ\ dx = [\,x - x^2/b + 1/3\,x^3/b^2\,]_o^b\ 1/EJ$

$= (\,b - b + 1/3\,b\,)\ 1/EJ = 1/3\ b/EJ$

$L^{XX}_{IH} = \int_o^b (\,x^2/b^2\,)\ 1/EJ\ dx = [1/3\,x^3/b^2\,]_o^b\ 1/EJ$

$= (1/3\,b\,)\ 1/EJ = 1/3\ b/EJ$

$L^{XX}_{HG} = \int_o^b (1)\ 1/EJ\ dx = [\,x\,]_o^b\ 1/EJ$

$= (\,b\,)\ 1/EJ = b/EJ$

$L^{XX}_{GH} = \int_o^b (1)\ 1/EJ\ dx = [\,x\,]_o^b\ 1/EJ$

$= (\,b\,)\ 1/EJ = b/EJ$

$L^{Xo}_{GA} = \int_o^b (\,x/b - x^2/b^2\,)\ Fb\ 1/EJ\ dx = [1/2\,x^2/b - 1/3\,x^3/b^2\,]_o^b\ Fb\ 1/EJ$

$= (1/2\,b - 1/3\,b\,)\ Fb\ 1/EJ = 1/6\ Fb^2/EJ$

$L^{Xo}_{AG} = \int_o^b (\,x/b - x^2/b^2\,)\ Fb\ 1/EJ\ dx = [1/2\,x^2/b - 1/3\,x^3/b^2\,]_o^b\ Fb\ 1/EJ$

$= (1/2\,b - 1/3\,b\,)\ Fb\ 1/EJ = 1/6\ Fb^2/EJ$

$L^{Xo}_{HI} = \int_o^b (-1 + x/b\,)\ Fb\ 1/EJ\ dx = [-\,x + 1/2\,x^2/b\,]_o^b\ Fb\ 1/EJ$

$= (-\,b + 1/2\,b\,)\ Fb\ 1/EJ = -1/2\ Fb^2/EJ$

$L^{Xo}_{IH} = \int_o^b (-\,x/b\,)\ Fb\ 1/EJ\ dx = [-1/2\,x^2/b\,]_o^b\ Fb\ 1/EJ$

$= (-1/2\,b\,)\ Fb\ 1/EJ = -1/2\ Fb^2/EJ$

$L^{Xo}_{HG} = \int_o^b (3/2 - 2\,x/b + 1/2\,x^2/b^2\,)\ Fb\ 1/EJ\ dx - 1\ \ (-1)\ \ (-1)\ \ Fb^2/EJ$

$= [3/2\,x - x^2/b + 1/6\,x^3/b^2\,]_o^b\ Fb\ 1/EJ\ -\ 1\ \ (-1)\ \ (-1)\ \ Fb^2/EJ$

$= (3/2\,b - b + 1/6\,b\,)\ Fb\ 1/EJ\ -\ 1\ \ (-1)\ \ (-1)\ \ Fb^2/EJ = -1/3\ \ Fb^2/EJ$

$L^{Xo}_{GH} = \int_o^b (\,x/b + 1/2\,x^2/b^2\,)\ Fb\ 1/EJ\ dx - 1\ \ (-1)\ \ (-1)\ \ Fb^2/EJ$

$= [1/2\,x^2/b + 1/6\,x^3/b^2\,]_o^b\ Fb\ 1/EJ\ -\ 1\ \ (-1)\ \ (-1)\ \ Fb^2/EJ$

$= (1/2\,b + 1/6\,b\,)\ Fb\ 1/EJ\ -\ 1\ \ (-1)\ \ (-1)\ \ Fb^2/EJ = -1/3\ \ Fb^2/EJ$

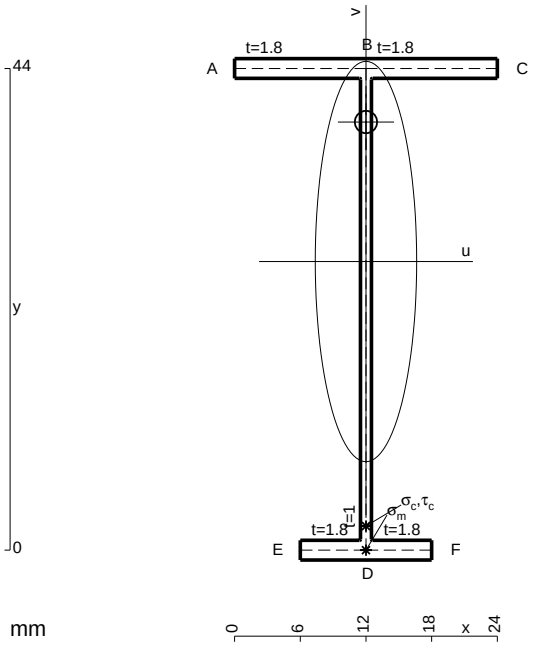

A = 108.8 mm^2
J_u = 36386. mm^4
J_v = 2333. mm^4
J_t = 84.65 mm^4
y_o = 12.74 mm
y_g = 26.37 mm
N = -280. N
T_y = -700. N
M_x = -266000. Nmm
x_m = 12. mm
v_m = -26.37 mm
$\sigma_m = N/A - Mv/J_u$ = -195.3 N/mm^2
y_c = 3. mm
u_c = -12. mm
v_c = -23.37 mm
$\sigma_c = N/A - Mv/J_u$ = -195.3 N/mm^2
$\tau_c = TS^*/tJ_u$ = 10.96 N/mm^2
$\tau_g = TS^*/tJ_u$ = 10.96 N/mm^2
t_c = 280. mm
$\sigma_o = \sqrt{\sigma^2 + 3\tau^2}$ = 196.3 N/mm^2

ESΣ05.xxxx.110

@ Adolfo Zavelani Rossi, Politecnico di Milano, vers.27.03.13 01.12.25

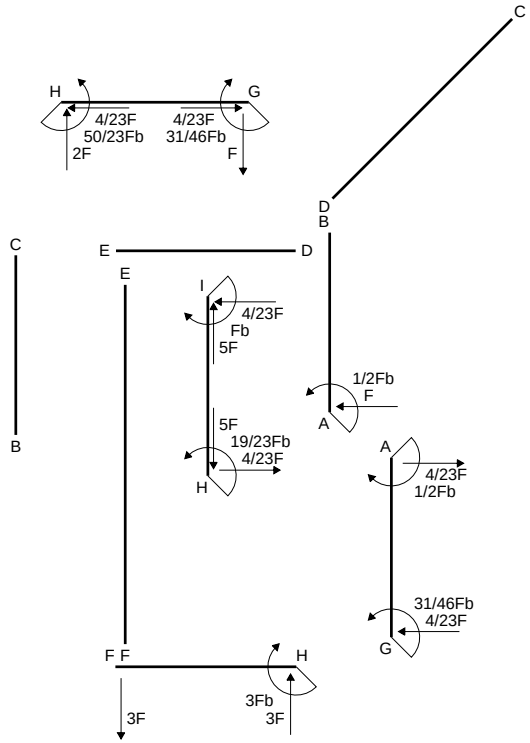
H
G
4/23F
50/23Fb
2F
4/23F
31/46Fb
F
C
D
B
E
D
C
E
I
4/23F
Fb
5F
1/2Fb
F
A
5F
19/23Fb
4/23F
H
A
4/23F
1/2Fb
31/46Fb
4/23F
G
B
F F
H
3Fb
3F
3F

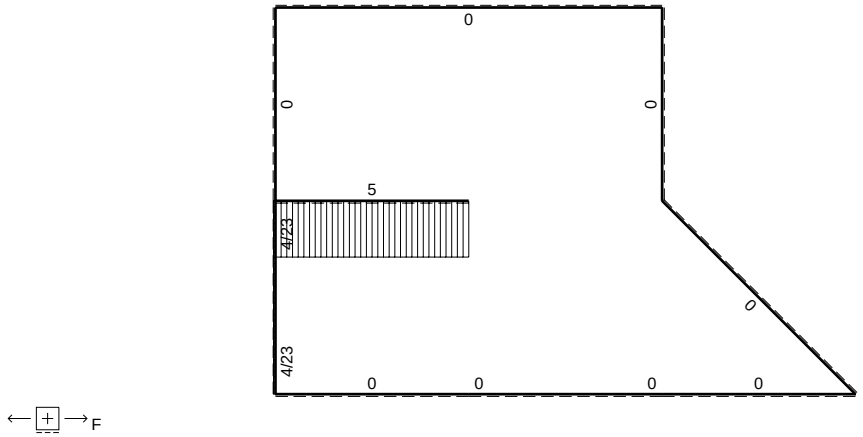
F
0
0
0
5
4/23
0
4/23
0
0
0
0

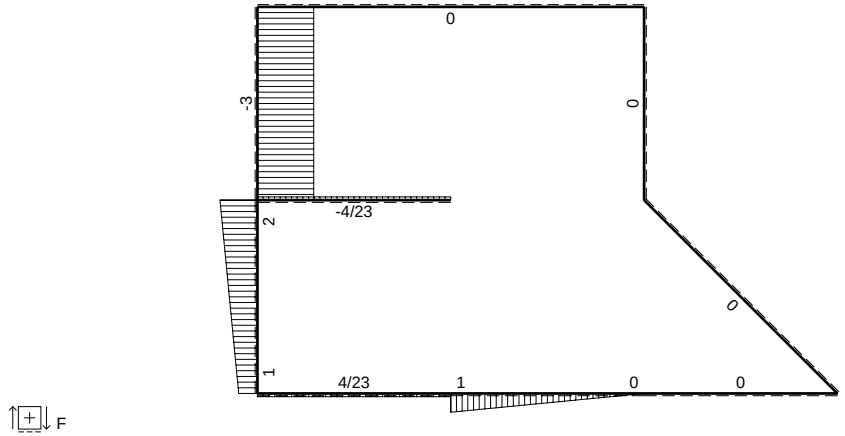
F
0
-3
0
-4/23
2
0
1
4/23
1
0
0

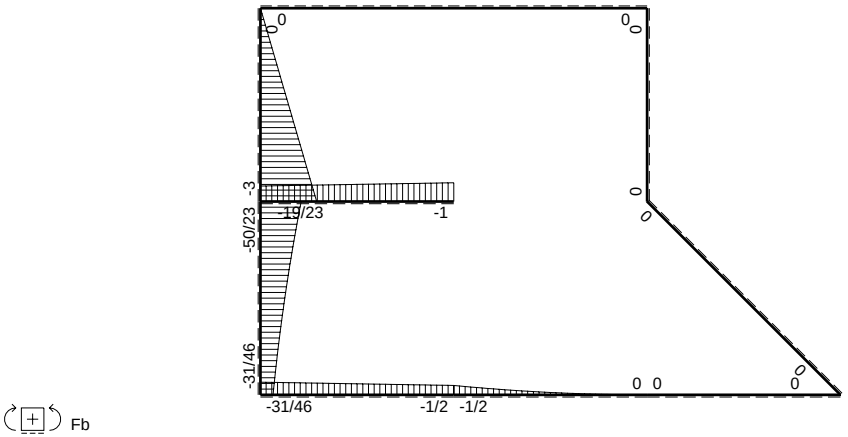
Fb
0
0
0
0
-3
-50/23
-19/23
-1
0
0
-31/46
0 0
0
-31/46
-1/2 -1/2

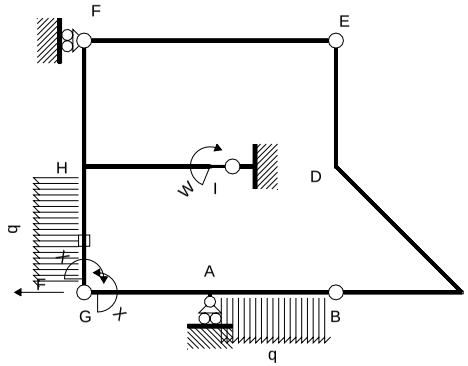

Schema di calcolo iperstatico

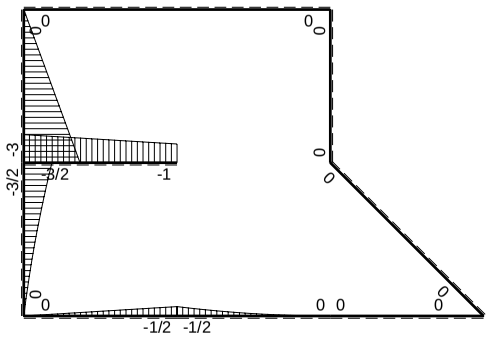

M_0 flessione da carichi assegnati

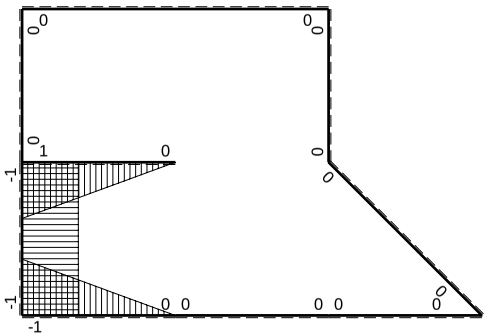

M_x flessione da iperstatica X=1

Quadro contributi PLV per iperstatica $X=W_{GA}$

→	$M_x(x)$	$M_0(x)$	M_xM_0	M_xM_x	$\int M_xM_0/EJdx$	$\int XM_xM_x/EJdx$
AB b	0	$-1/2Fb+Fx-1/2qx^2$	0	0	0	0
BA b	0	$1/2qx^2$	0	0		
BC b	0	0	0	0	0	0
CB b	0	0	0	0		
CD √2b	0	0	0	0	0	0
DE b	0	0	0	0	0	0
ED b	0	0	0	0		
EF 2b	0	0	0	0	0	0
FE 2b	0	0	0	0		
GA b	$-1+x/b$	$-1/2Fx$	$1/2Fx-1/2Fx^2/b$	$1-2x/b+x^2/b^2$	$1/12Fb^2/EJ$	$1/3Xb/EJ$
AG b	x/b	$1/2Fb-1/2Fx$	$1/2Fx-1/2Fx^2/b$	x^2/b^2		
FH b	0	$-3Fx$	0	0	0	0
HF b	0	$3Fb-3Fx$	0	0		
HI b	$1-x/b$	$-3/2Fb+1/2Fx$	$-3/2Fb+2Fx-1/2Fx^2/b$	$1-2x/b+x^2/b^2$	$-2/3Fb^2/EJ$	$1/3Xb/EJ$
IH b	$-x/b$	$Fb+1/2Fx$	$-Fx-1/2Fx^2/b$	x^2/b^2		
HG b	-1	$-3/2Fb+2Fx-1/2qx^2$	$3/2Fb-2Fx+1/2Fx^2/b$	1	$2/3Fb^2/EJ$	Xb/EJ
GH b	1	$Fx+1/2qx^2$	$Fx+1/2Fx^2/b$	1		
HG	elongazione asta $N_{1HG}\varepsilon_{HG}L_{HG}$				$-Fb^2/EJ$	
A	molla nodo $-V_{1A}(V_{0A}+XV_{1A})/k_A$				$-3/8Fb^2/EJ$	$1/4Xb/EJ$
	totali				$-31/24Fb^2/EJ$	$23/12Xb/EJ$
	iperstatica $X=W_{GA}$				31/46Fb	

Sviluppi di calcolo iperstatica

$L^{XX}_{GA} = \int_o^b (1 - 2\,x/b + x^2/b^2)\ 1/EJ\ dx = [\ x - x^2/b + 1/3\ x^3/b^2\ ]_o^b\ 1/EJ$

$= (\ b - b + 1/3\ b\ )\ 1/EJ\ = 1/3\ b/EJ$

$L^{XX}_{AG} = \int_o^b (\ x^2/b^2\ )\ 1/EJ\ dx = [1/3\ x^3/b^2\ ]_o^b\ 1/EJ$

$= (1/3\ b\ )\ 1/EJ\ = 1/3\ b/EJ$

$L^{XX}_{HI} = \int_o^b (1 - 2\,x/b + x^2/b^2)\ 1/EJ\ dx = [\ x - x^2/b + 1/3\ x^3/b^2\ ]_o^b\ 1/EJ$

$= (\ b - b + 1/3\ b\ )\ 1/EJ\ = 1/3\ b/EJ$

$L^{XX}_{IH} = \int_o^b (\ x^2/b^2\ )\ 1/EJ\ dx = [1/3\ x^3/b^2\ ]_o^b\ 1/EJ$

$= (1/3\ b\ )\ 1/EJ\ = 1/3\ b/EJ$

$L^{XX}_{HG} = \int_o^b (1\ )\ 1/EJ\ dx = [\ x\ ]_o^b\ 1/EJ$

$= (\ b\ )\ 1/EJ\ =\ b/EJ$

$L^{XX}_{GH} = \int_o^b (1\ )\ 1/EJ\ dx = [\ x\ ]_o^b\ 1/EJ$

$= (\ b\ )\ 1/EJ\ =\ b/EJ$

$L^{Xo}_{GA} = \int_o^b (1/2\ x/b - 1/2\ x^2/b^2\ )\ Fb\ 1/EJ\ dx = [1/4\ x^2/b - 1/6\ x^3/b^2\ ]_o^b\ Fb\ 1/EJ$

$= (1/4\ b - 1/6\ b\ )\ Fb\ 1/EJ\ = 1/12\ \ Fb^2/EJ$

$L^{Xo}_{AG} = \int_o^b (1/2\ x/b - 1/2\ x^2/b^2\ )\ Fb\ 1/EJ\ dx = [1/4\ x^2/b - 1/6\ x^3/b^2\ ]_o^b\ Fb\ 1/EJ$

$= (1/4\ b - 1/6\ b\ )\ Fb\ 1/EJ\ = 1/12\ \ Fb^2/EJ$

$L^{Xo}_{HI} = \int_o^b (-3/2 + 2\ x/b - 1/2\ x^2/b^2\ )\ Fb\ 1/EJ\ dx = [-3/2\ x + x^2/b - 1/6\ x^3/b^2\ ]_o^b\ Fb\ 1/EJ$

$= (-3/2\ b + b - 1/6\ b\ )\ Fb\ 1/EJ\ = -2/3\ \ Fb^2/EJ$

$L^{Xo}_{IH} = \int_o^b (-\ x/b - 1/2\ x^2/b^2\ )\ Fb\ 1/EJ\ dx = [-1/2\ x^2/b - 1/6\ x^3/b^2\ ]_o^b\ Fb\ 1/EJ$

$= (-1/2\ b - 1/6\ b\ )\ Fb\ 1/EJ\ = -2/3\ \ Fb^2/EJ$

$L^{Xo}_{HG} = \int_o^b (3/2 - 2\ x/b + 1/2\ x^2/b^2\ )\ Fb\ 1/EJ\ dx - 1\ \ (-1)\ \ (-1)\ \ Fb^2/EJ$

$= [3/2\ x - x^2/b + 1/6\ x^3/b^2\ ]_o^b\ Fb\ 1/EJ\ - 1\ \ (-1)\ \ (-1)\ \ Fb^2/EJ$

$= (3/2\ b - b + 1/6\ b\ )\ Fb\ 1/EJ\ - 1\ \ (-1)\ \ (-1)\ \ Fb^2/EJ = -1/3\ \ Fb^2/EJ$

$L^{Xo}_{GH} = \int_o^b (\ x/b + 1/2\ x^2/b^2\ )\ Fb\ 1/EJ\ dx - 1\ \ (-1)\ \ (-1)\ \ Fb^2/EJ$

$= [1/2\ x^2/b + 1/6\ x^3/b^2\ ]_o^b\ Fb\ 1/EJ\ - 1\ \ (-1)\ \ (-1)\ \ Fb^2/EJ$

$= (1/2\ b + 1/6\ b\ )\ Fb\ 1/EJ\ - 1\ \ (-1)\ \ (-1)\ \ Fb^2/EJ = -1/3\ \ Fb^2/EJ$

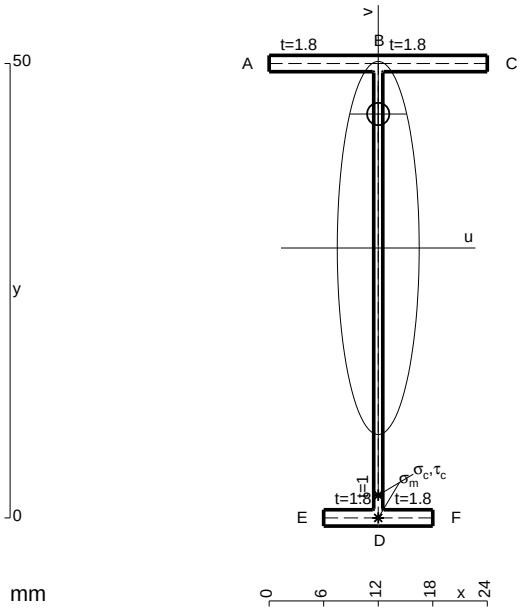

A = 114.8 mm^2
J_u = 48377. mm^4
J_v = 2333. mm^4
J_t = 86.65 mm^4
y_o = 14.74 mm
y_g = 29.7 mm
T_y = -720. N
M_x = -338400. Nmm
x_m = 12. mm
v_m = -29.7 mm
$\sigma_m = -Mv/J_u$ = -207.8 N/mm^2
y_c = 3. mm
u_c = -12. mm
v_c = -26.7 mm
$\sigma_c = -Mv/J_u$ = -207.8 N/mm^2
$\tau_c = TS^*/tJ_u$ = 9.549 N/mm^2
$\tau_g = TS^*/tJ_u$ = 9.549 N/mm^2
t_c = 240. mm
$\sigma_o = \sqrt{\sigma^2 + 3\tau^2}$ = 208.4 N/mm^2

ESΣ05.xxxx.111

@ Adolfo Zavelani Rossi, Politecnico di Milano, vers.27.03.13 01.12.25

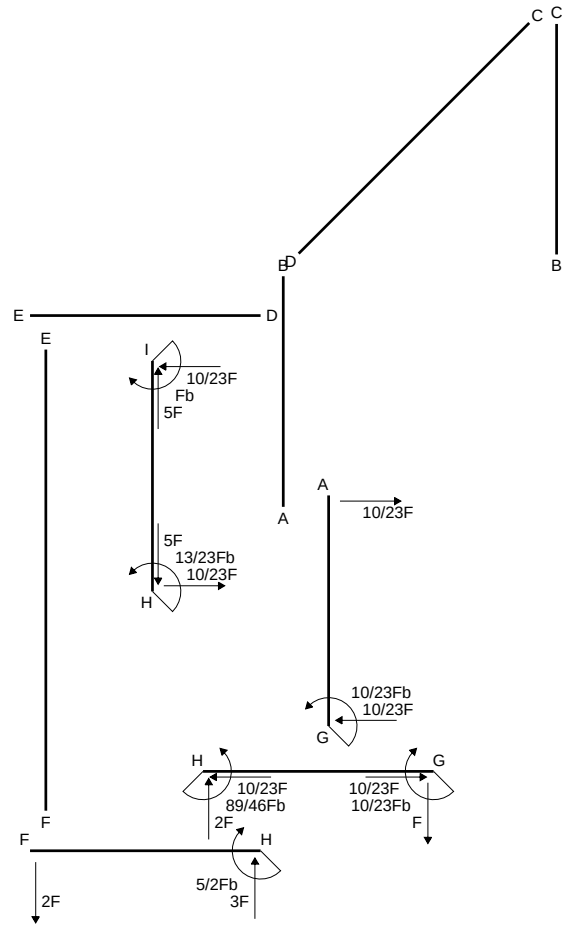
C C
B D
B
E D
E
I
10/23F
Fb
5F
A
A
10/23F
5F
13/23Fb
10/23F
H
10/23Fb
10/23F
G
H
G
10/23F
89/46Fb
2F
10/23F
10/23Fb
F
F
F
H
5/2Fb
3F
2F

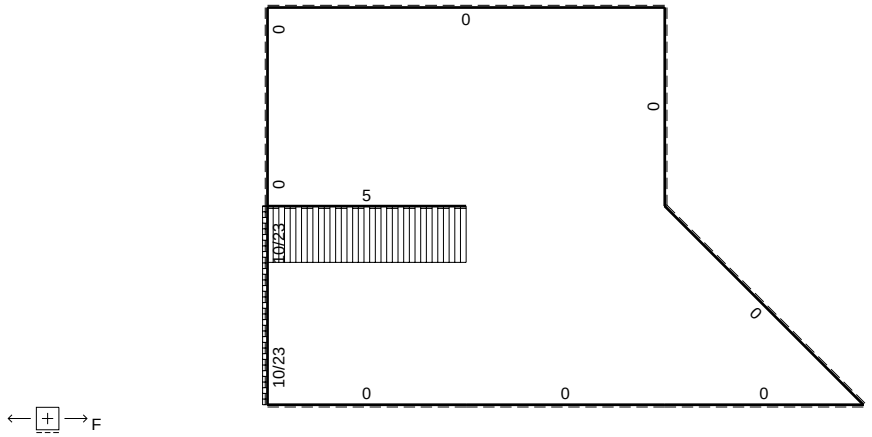
F
0
0
0
0
5
10/23
0
10/23
0
0
0

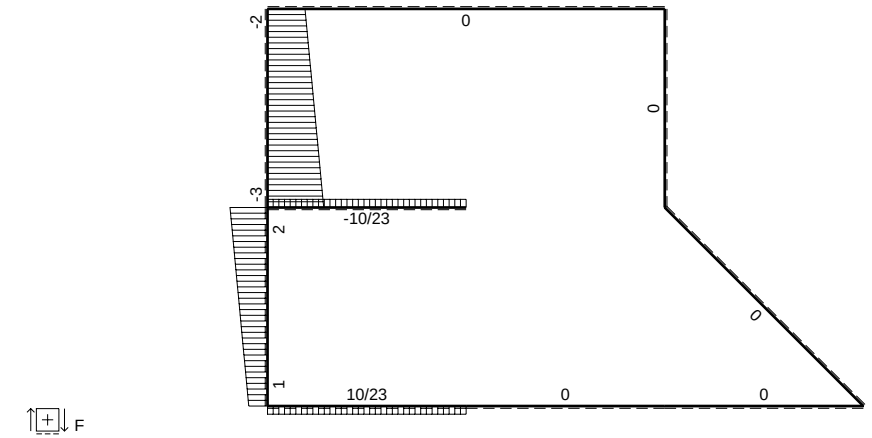
F
-2
0
0
-3
-10/23
2
0
1
10/23
0
0

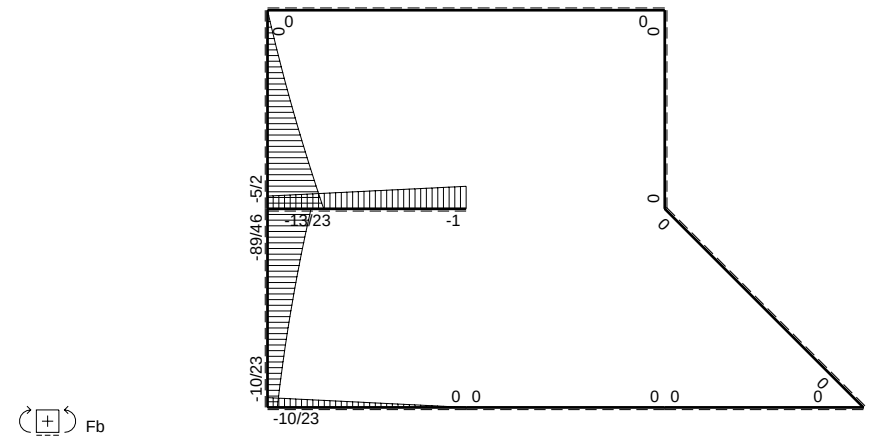
Fb
0
0
0
-5/2
-89/46
-13/23
-1
0
0
-10/23
0 0
0 0
0
-10/23

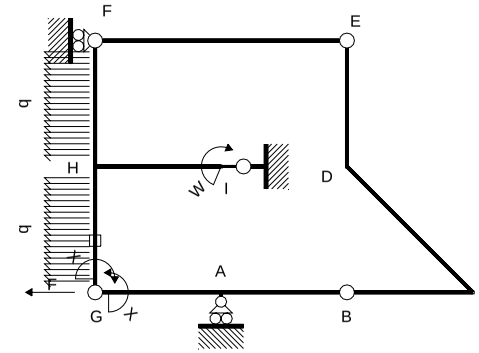

Schema di calcolo iperstatico

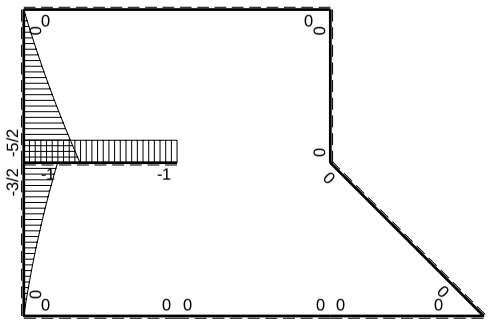

M_0 flessione da carichi assegnati

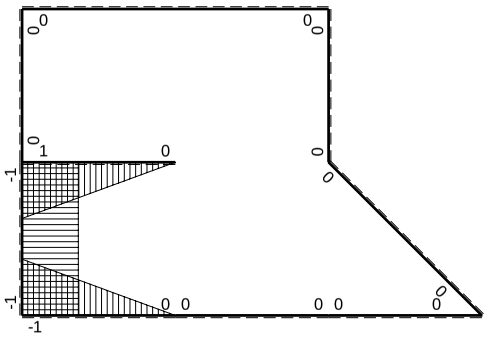

M_x flessione da iperstatica X=1

Quadro contributi PLV per iperstatica $X=W_{GA}$

→	$M_x(x)$	$M_0(x)$	M_xM_0	M_xM_x	$\int M_xM_0/EJdx$	$\int XM_xM_x/EJdx$
AB b	0	0	0	0	0	0
BA b	0	0	0	0		
BC b	0	0	0	0	0	0
CB b	0	0	0	0		
CD $\sqrt{2}$b	0	0	0	0	0	0
DE b	0	0	0	0	0	0
ED b	0	0	0	0		
EF 2b	0	0	0	0	0	0
FE 2b	0	0	0	0		
GA b	-1+x/b	0	0	$1-2x/b+x^2/b^2$	0	1/3Xb/EJ
AG b	x/b	0	0	x^2/b^2		
FH b	0	$-2Fx-1/2qx^2$	0	0	0	0
HF b	0	$5/2Fb-3Fx+1/2qx^2$	0	0		
HI b	1-x/b	-Fb	-Fb+Fx	$1-2x/b+x^2/b^2$	$-1/2Fb^2/EJ$	1/3Xb/EJ
IH b	-x/b	Fb	-Fx	x^2/b^2		
HG b	-1	$-3/2Fb+2Fx-1/2qx^2$	$3/2Fb-2Fx+1/2Fx^2/b$	1	$2/3Fb^2/EJ$	Xb/EJ
GH b	1	$Fx+1/2qx^2$	$Fx+1/2Fx^2/b$	1		
HG	elongazione asta $N_{1HG}\varepsilon_{HG}L_{HG}$				$-Fb^2/EJ$	
A	molla nodo $-V_{1A}(V_{0A}+XV_{1A})/k_A$					1/4Xb/EJ
	totali				$-5/6Fb^2/EJ$	23/12Xb/EJ
	iperstatica $X=W_{GA}$				10/23Fb	

Sviluppi di calcolo iperstatica

$L^{XX}_{GA} = \int_o^b (1 - 2\,x/b + x^2/b^2)\ 1/EJ\ dx = [\,x - x^2/b + 1/3\,x^3/b^2\,]_o^b\ 1/EJ$

$= (\,b - b + 1/3\,b\,)\ 1/EJ = 1/3\ b/EJ$

$L^{XX}_{AG} = \int_o^b (\,x^2/b^2\,)\ 1/EJ\ dx = [1/3\,x^3/b^2\,]_o^b\ 1/EJ$

$= (1/3\,b\,)\ 1/EJ = 1/3\ b/EJ$

$L^{XX}_{HI} = \int_o^b (1 - 2\,x/b + x^2/b^2)\ 1/EJ\ dx = [\,x - x^2/b + 1/3\,x^3/b^2\,]_o^b\ 1/EJ$

$= (\,b - b + 1/3\,b\,)\ 1/EJ = 1/3\ b/EJ$

$L^{XX}_{IH} = \int_o^b (\,x^2/b^2\,)\ 1/EJ\ dx = [1/3\,x^3/b^2\,]_o^b\ 1/EJ$

$= (1/3\,b\,)\ 1/EJ = 1/3\ b/EJ$

$L^{XX}_{HG} = \int_o^b (1)\ 1/EJ\ dx = [\,x\,]_o^b\ 1/EJ$

$= (\,b\,)\ 1/EJ = b/EJ$

$L^{XX}_{GH} = \int_o^b (1)\ 1/EJ\ dx = [\,x\,]_o^b\ 1/EJ$

$= (\,b\,)\ 1/EJ = b/EJ$

$L^{Xo}_{HI} = \int_o^b (-1 + x/b\,)\ Fb\ 1/EJ\ dx = [-\,x + 1/2\,x^2/b\,]_o^b\ Fb\ 1/EJ$

$= (-\,b + 1/2\,b\,)\ Fb\ 1/EJ = -1/2\ Fb^2/EJ$

$L^{Xo}_{IH} = \int_o^b (-\,x/b\,)\ Fb\ 1/EJ\ dx = [-1/2\,x^2/b\,]_o^b\ Fb\ 1/EJ$

$= (-1/2\,b\,)\ Fb\ 1/EJ = -1/2\ Fb^2/EJ$

$L^{Xo}_{HG} = \int_o^b (3/2 - 2\,x/b + 1/2\,x^2/b^2\,)\ Fb\ 1/EJ\ dx - 1\ \ (-1)\ \ (-1)\ \ Fb^2/EJ$

$= [3/2\,x - x^2/b + 1/6\,x^3/b^2\,]_o^b\ Fb\ 1/EJ\ -\ 1\ \ (-1)\ \ (-1)\ \ Fb^2/EJ$

$= (3/2\,b - b + 1/6\,b\,)\ Fb\ 1/EJ\ -\ 1\ \ (-1)\ \ (-1)\ \ Fb^2/EJ = -1/3\ \ Fb^2/EJ$

$L^{Xo}_{GH} = \int_o^b (\,x/b + 1/2\,x^2/b^2\,)\ Fb\ 1/EJ\ dx - 1\ \ (-1)\ \ (-1)\ \ Fb^2/EJ$

$= [1/2\,x^2/b + 1/6\,x^3/b^2\,]_o^b\ Fb\ 1/EJ\ -\ 1\ \ (-1)\ \ (-1)\ \ Fb^2/EJ$

$= (1/2\,b + 1/6\,b\,)\ Fb\ 1/EJ\ -\ 1\ \ (-1)\ \ (-1)\ \ Fb^2/EJ = -1/3\ \ Fb^2/EJ$

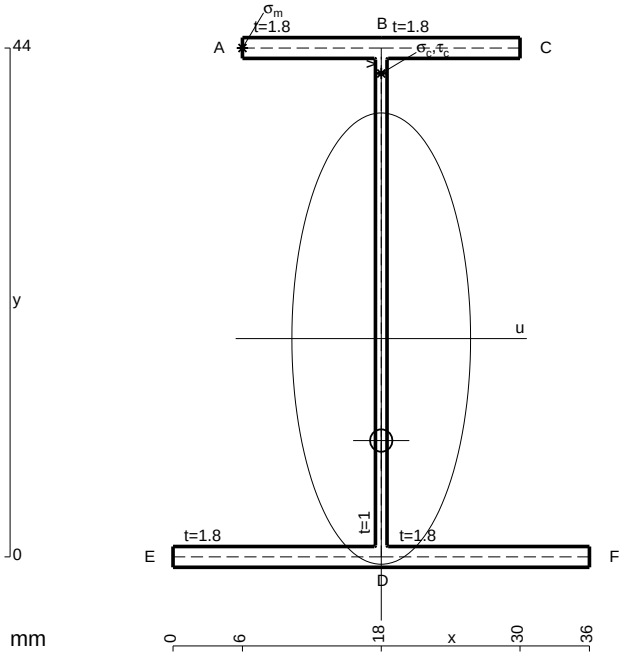

A = 152. mm^2
J_u = 57885. mm^4
J_v = 9072. mm^4
J_t = 131.3 mm^4
y_o = -8.817 mm
y_g = 18.87 mm
T_y = -1350. N
M_x = -506250. Nmm
x_m = 6. mm
y_m = 44. mm
u_m = -12. mm
v_m = 25.13 mm
$\sigma_m = -Mv/J_u$ = 219.7 N/mm^2
x_c = 18. mm
y_c = 44. mm
v_c = 25.13 mm
$\sigma_c = -Mv/J_u$ = 219.7 N/mm^2
$\tau_c = TS^*/tJ_u$ = 25.32 N/mm^2
$\tau_g = TS^*/tJ_u$ = 25.32 N/mm^2
t_c = 450. mm
$\sigma_o = \sqrt{\sigma^2 + 3\tau^2}$ = 224.1 N/mm^2

ESΣ05.xxxx.112

@ Adolfo Zavelani Rossi, Politecnico di Milano, vers.27.03.13 01.12.25

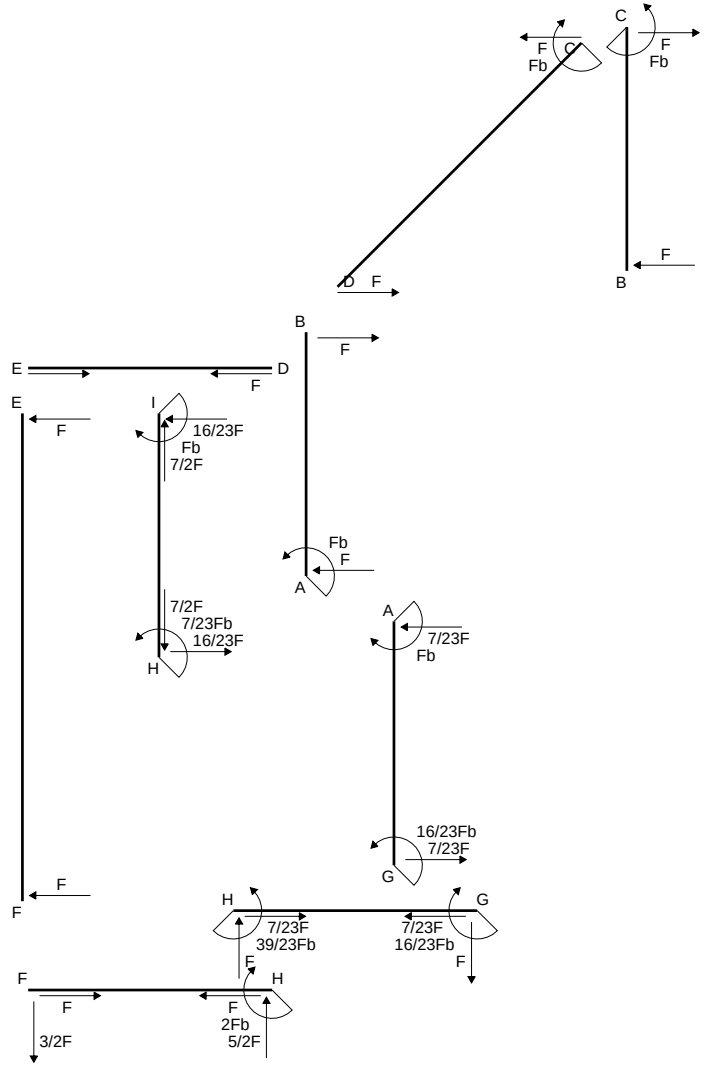
C
F
Fb
C
F
Fb
F
D
F
B
B
F
E
D
F
E
F
I
16/23F
Fb
7/2F
Fb
F
A
7/2F
7/23Fb
16/23F
H
A
7/23F
Fb
16/23Fb
7/23F
G
F
F
H
G
7/23F
39/23Fb
7/23F
16/23Fb
F
F
H
F
F
2Fb
5/2F
3/2F

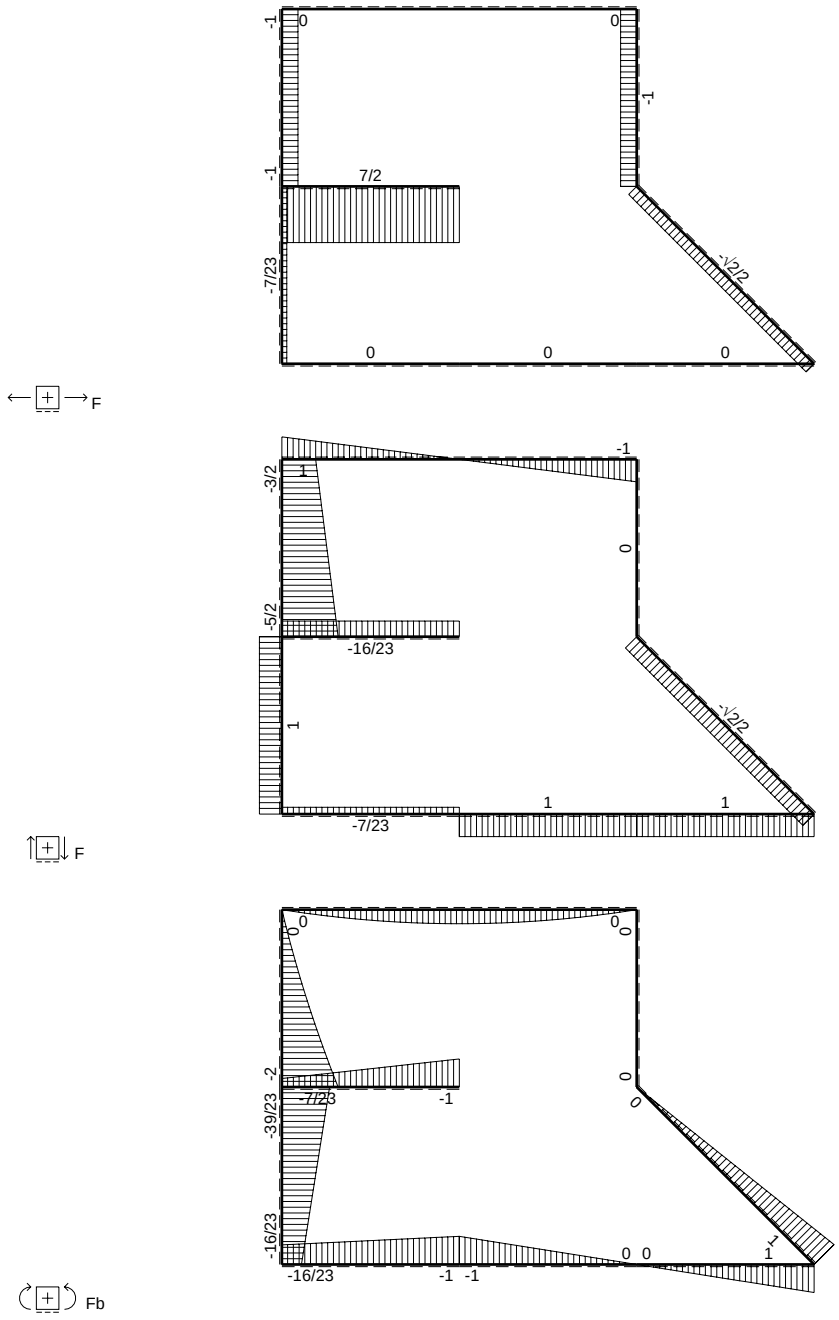
F
-1
0
0
-1
-1
7/2
-7/23
-√2/2
0
0
0
F
-3/2
1
-1
0
-5/2
-16/23
1
-√2/2
1
1
-7/23
F
0
0
0
0
-2
-39/23
-7/23
-1
0
0
-16/23
0 0
1
-16/23
-1 -1
Fb

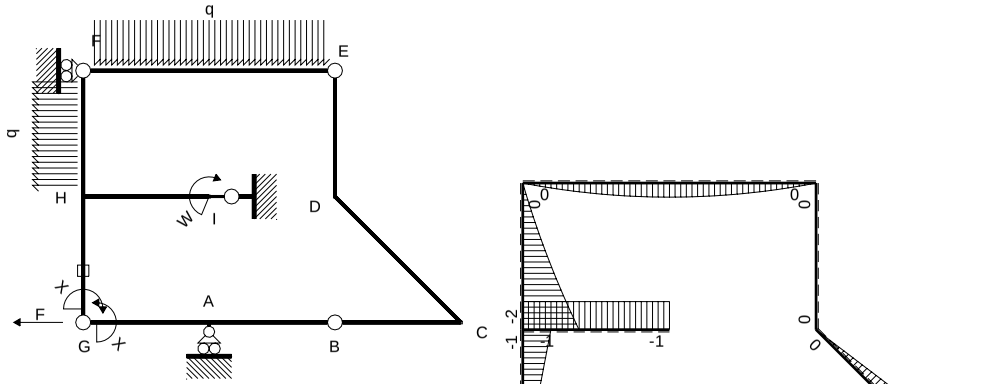

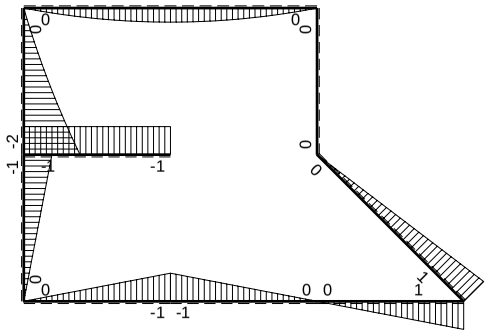

M_0 flessione da carichi assegnati

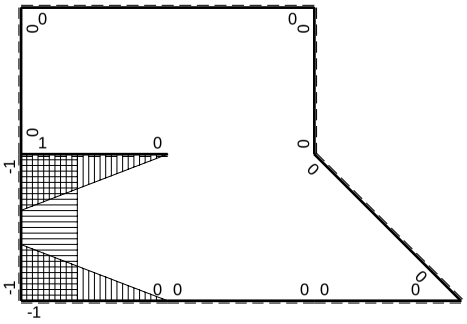

M_x flessione da iperstatica X=1

Quadro contributi PLV per iperstatica $X=W_{GA}$

→	$M_x(x)$	$M_0(x)$	M_xM_0	M_xM_x	$\int M_xM_0/EJdx$	$\int XM_xM_x/EJdx$
AB b	0	-Fb+Fx	0	0	0	0
BA b	0	Fx	0	0		
BC b	0	Fx	0	0	0	0
CB b	0	-Fb+Fx	0	0		
CD √2b	0	Fb-√2/2Fx	0	0	0	0
DE b	0	0	0	0	0	0
ED b	0	0	0	0		
EF 2b	0	$-Fx+1/2qx^2$	0	0	0	0
FE 2b	0	$Fx-1/2qx^2$	0	0		
GA b	-1+x/b	-Fx	$Fx-Fx^2/b$	$1-2x/b+x^2/b^2$	$1/6Fb^2/EJ$	1/3Xb/EJ
AG b	x/b	Fb-Fx	$Fx-Fx^2/b$	x^2/b^2		
FH b	0	$-3/2Fx-1/2qx^2$	0	0	0	0
HF b	0	$2Fb-5/2Fx+1/2qx^2$	0	0		
HI b	1-x/b	-Fb	-Fb+Fx	$1-2x/b+x^2/b^2$	$-1/2Fb^2/EJ$	1/3Xb/EJ
IH b	-x/b	Fb	-Fx	x^2/b^2		
HG b	-1	-Fb+Fx	Fb-Fx	1	$1/2Fb^2/EJ$	Xb/EJ
GH b	1	Fx	Fx	1		
HG	elongazione asta $N_{1HG}\varepsilon_{HG}L_{HG}$				$-Fb^2/EJ$	
A	molla nodo $-V_{1A}(V_{0A}+XV_{1A})/k_A$				$-1/2Fb^2/EJ$	1/4Xb/EJ
	totali				$-4/3Fb^2/EJ$	23/12Xb/EJ
	iperstatica $X=W_{GA}$				16/23Fb	

Sviluppi di calcolo iperstatica

$L^{XX}_{GA} = \int_o^b (1 - 2\,x/b + x^2/b^2)\ 1/EJ\ dx = [\,x - x^2/b + 1/3\,x^3/b^2\,]_o^b\ 1/EJ$

$= (\,b - b + 1/3\,b\,)\ 1/EJ = 1/3\ b/EJ$

$L^{XX}_{AG} = \int_o^b (\,x^2/b^2\,)\ 1/EJ\ dx = [1/3\,x^3/b^2\,]_o^b\ 1/EJ$

$= (1/3\,b\,)\ 1/EJ = 1/3\ b/EJ$

$L^{XX}_{HI} = \int_o^b (1 - 2\,x/b + x^2/b^2)\ 1/EJ\ dx = [\,x - x^2/b + 1/3\,x^3/b^2\,]_o^b\ 1/EJ$

$= (\,b - b + 1/3\,b\,)\ 1/EJ = 1/3\ b/EJ$

$L^{XX}_{IH} = \int_o^b (\,x^2/b^2\,)\ 1/EJ\ dx = [1/3\,x^3/b^2\,]_o^b\ 1/EJ$

$= (1/3\,b\,)\ 1/EJ = 1/3\ b/EJ$

$L^{XX}_{HG} = \int_o^b (1)\ 1/EJ\ dx = [\,x\,]_o^b\ 1/EJ$

$= (\,b\,)\ 1/EJ = b/EJ$

$L^{XX}_{GH} = \int_o^b (1)\ 1/EJ\ dx = [\,x\,]_o^b\ 1/EJ$

$= (\,b\,)\ 1/EJ = b/EJ$

$L^{Xo}_{GA} = \int_o^b (\,x/b - x^2/b^2\,)\ Fb\ 1/EJ\ dx = [1/2\,x^2/b - 1/3\,x^3/b^2\,]_o^b\ Fb\ 1/EJ$

$= (1/2\,b - 1/3\,b\,)\ Fb\ 1/EJ = 1/6\ Fb^2/EJ$

$L^{Xo}_{AG} = \int_o^b (\,x/b - x^2/b^2\,)\ Fb\ 1/EJ\ dx = [1/2\,x^2/b - 1/3\,x^3/b^2\,]_o^b\ Fb\ 1/EJ$

$= (1/2\,b - 1/3\,b\,)\ Fb\ 1/EJ = 1/6\ Fb^2/EJ$

$L^{Xo}_{HI} = \int_o^b (-1 + x/b\,)\ Fb\ 1/EJ\ dx = [-\,x + 1/2\,x^2/b\,]_o^b\ Fb\ 1/EJ$

$= (-\,b + 1/2\,b\,)\ Fb\ 1/EJ = -1/2\ Fb^2/EJ$

$L^{Xo}_{IH} = \int_o^b (-\,x/b\,)\ Fb\ 1/EJ\ dx = [-1/2\,x^2/b\,]_o^b\ Fb\ 1/EJ$

$= (-1/2\,b\,)\ Fb\ 1/EJ = -1/2\ Fb^2/EJ$

$L^{Xo}_{HG} = \int_o^b (1 - x/b\,)\ Fb\ 1/EJ\ dx - 1\ \ (-1)\ \ (-1)\ \ Fb^2/EJ = [\,x - 1/2\,x^2/b\,]_o^b\ Fb\ 1/EJ\ \ - 1\ \ (-1)\ \ (-1)\ \ Fb^2/EJ$

$= (\,b - 1/2\,b\,)\ Fb\ 1/EJ\ \ - 1\ \ (-1)\ \ (-1)\ \ Fb^2/EJ = -1/2\ \ Fb^2/EJ$

$L^{Xo}_{GH} = \int_o^b (\,x/b\,)\ Fb\ 1/EJ\ dx - 1\ \ (-1)\ \ (-1)\ \ Fb^2/EJ = [1/2\,x^2/b\,]_o^b\ Fb\ 1/EJ\ \ - 1\ \ (-1)\ \ (-1)\ \ Fb^2/EJ$

$= (1/2\,b\,)\ Fb\ 1/EJ\ \ - 1\ \ (-1)\ \ (-1)\ \ Fb^2/EJ = -1/2\ \ Fb^2/EJ$

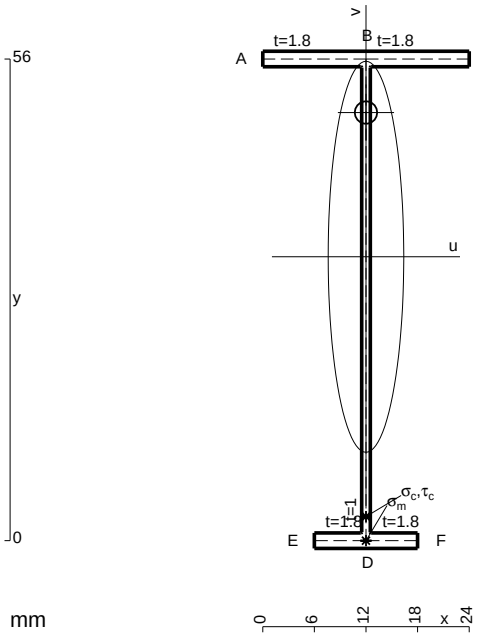

mm

A = 120.8 mm^2
J_u = 62410. mm^4
J_v = 2333. mm^4
J_t = 88.65 mm^4
y_o = 16.77 mm
y_g = 33.01 mm
N = -340. N
T_y = -850. N
M_x = -421600. Nmm
x_m = 12. mm
v_m = -33.01 mm
$\sigma_m = N/A - Mv/J_u$ = -225.8 N/mm^2
y_c = 3. mm
u_c = -12. mm
v_c = -30.01 mm
$\sigma_c = N/A - Mv/J_u$ = -225.8 N/mm^2
$\tau_c = TS^*/tJ_u$ = 9.71 N/mm^2
$\tau_g = TS^*/tJ_u$ = 9.71 N/mm^2
t_c = 340. mm
$\sigma_o = \sqrt{\sigma^2 + 3\tau^2}$ = 226.4 N/mm^2

ESΣ05.xxxx.113

@ Adolfo Zavelani Rossi, Politecnico di Milano, vers.27.03.13 01.12.25

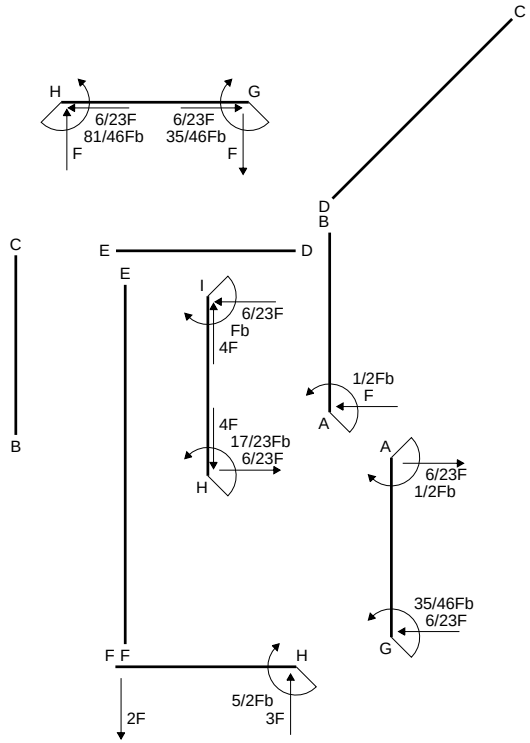
H
G
6/23F
81/46Fb
F
6/23F
35/46Fb
F
C
D
B
E
D
C
B
E
I
6/23F
Fb
4F
1/2Fb
F
A
4F
17/23Fb
6/23F
H
A
6/23F
1/2Fb
35/46Fb
6/23F
G
F F
H
5/2Fb
3F
2F

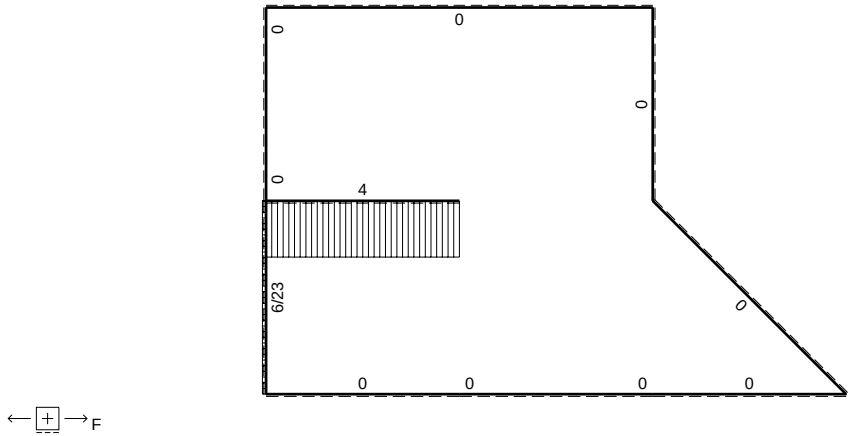
0
0
0
0
4
6/23
0
0
0
0
0
F

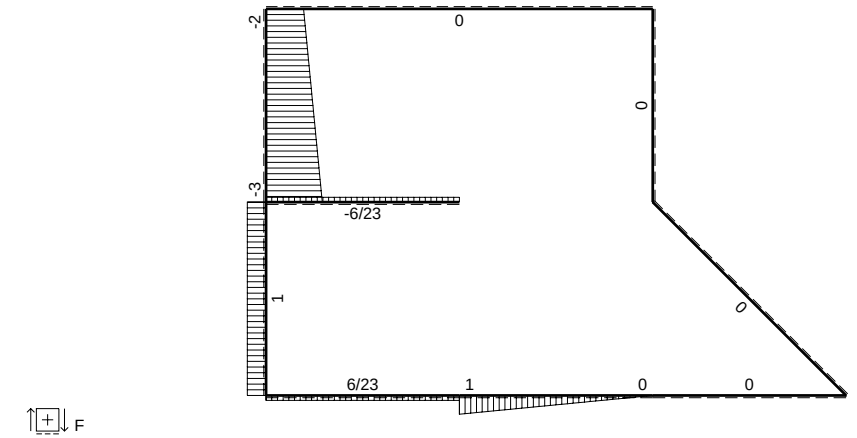
-2
0
0
-3
-6/23
1
0
6/23
1
0
0
F

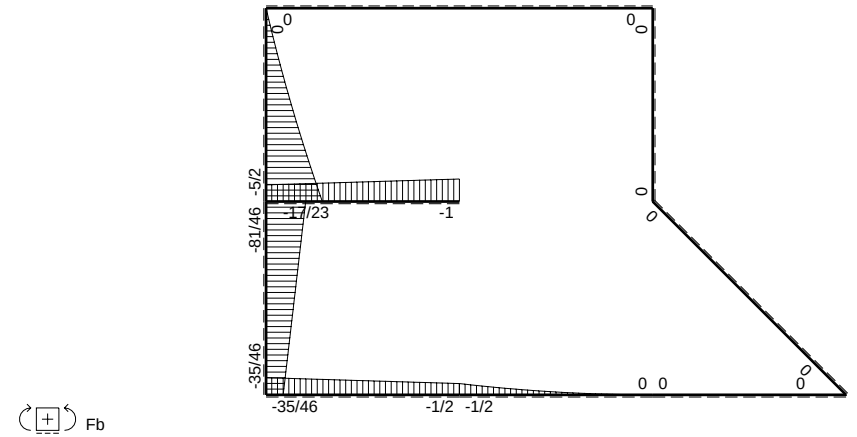
0
0
0
0
-5/2
-81/46
-17/23
-1
0
0
-35/46
0 0
0
-35/46
-1/2 -1/2
Fb

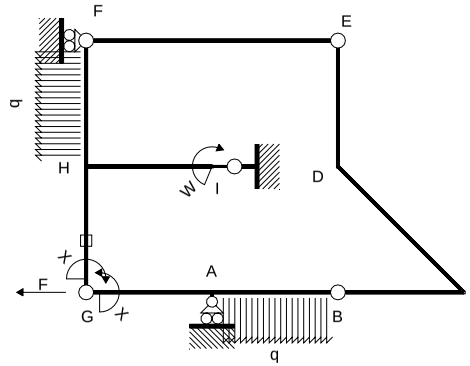

Schema di calcolo iperstatico

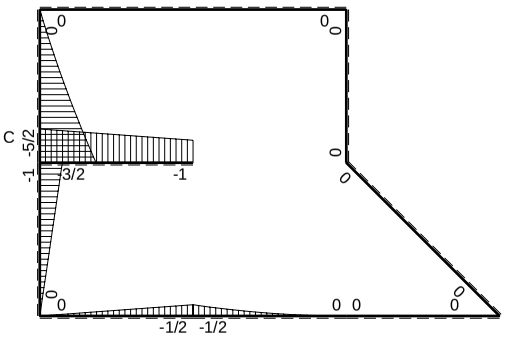

M_0 flessione da carichi assegnati

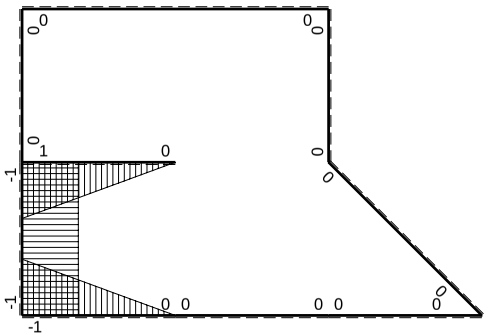

M_x flessione da iperstatica X=1

Quadro contributi PLV per iperstatica $X=W_{GA}$

→	$M_x(x)$	$M_0(x)$	M_xM_0	M_xM_x	$\int M_xM_0/EJdx$	$\int XM_xM_x/EJdx$
AB b	0	$-1/2Fb+Fx-1/2qx^2$	0	0	0	0
BA b	0	$1/2qx^2$	0	0		
BC b	0	0	0	0	0	0
CB b	0	0	0	0		
CD $\sqrt{2}$b	0	0	0	0	0	0
DE b	0	0	0	0	0	0
ED b	0	0	0	0		
EF 2b	0	0	0	0	0	0
FE 2b	0	0	0	0		
GA b	$-1+x/b$	$-1/2Fx$	$1/2Fx-1/2Fx^2/b$	$1-2x/b+x^2/b^2$	$1/12Fb^2/EJ$	$1/3Xb/EJ$
AG b	x/b	$1/2Fb-1/2Fx$	$1/2Fx-1/2Fx^2/b$	x^2/b^2		
FH b	0	$-2Fx-1/2qx^2$	0	0	0	0
HF b	0	$5/2Fb-3Fx+1/2qx^2$	0	0		
HI b	$1-x/b$	$-3/2Fb+1/2Fx$	$-3/2Fb+2Fx-1/2Fx^2/b$	$1-2x/b+x^2/b^2$	$-2/3Fb^2/EJ$	$1/3Xb/EJ$
IH b	$-x/b$	$Fb+1/2Fx$	$-Fx-1/2Fx^2/b$	x^2/b^2		
HG b	-1	$-Fb+Fx$	$Fb-Fx$	1	$1/2Fb^2/EJ$	Xb/EJ
GH b	1	Fx	Fx	1		
HG	elongazione asta $N_{1HG}\varepsilon_{HG}L_{HG}$				$-Fb^2/EJ$	
A	molla nodo $-V_{1A}(V_{0A}+XV_{1A})/k_A$				$-3/8Fb^2/EJ$	$1/4Xb/EJ$
	totali				$-35/24Fb^2/EJ$	$23/12Xb/EJ$
	iperstatica $X=W_{GA}$				35/46Fb	

Sviluppi di calcolo iperstatica

$L^{XX}_{GA} = \int_o^b (1 - 2\,x/b + x^2/b^2)\ 1/EJ\ dx = [\,x - x^2/b + 1/3\,x^3/b^2\,]_o^b\ 1/EJ$

$= (\,b - b + 1/3\,b\,)\ 1/EJ = 1/3\ b/EJ$

$L^{XX}_{AG} = \int_o^b (\,x^2/b^2\,)\ 1/EJ\ dx = [1/3\,x^3/b^2\,]_o^b\ 1/EJ$

$= (1/3\,b\,)\ 1/EJ = 1/3\ b/EJ$

$L^{XX}_{HI} = \int_o^b (1 - 2\,x/b + x^2/b^2)\ 1/EJ\ dx = [\,x - x^2/b + 1/3\,x^3/b^2\,]_o^b\ 1/EJ$

$= (\,b - b + 1/3\,b\,)\ 1/EJ = 1/3\ b/EJ$

$L^{XX}_{IH} = \int_o^b (\,x^2/b^2\,)\ 1/EJ\ dx = [1/3\,x^3/b^2\,]_o^b\ 1/EJ$

$= (1/3\,b\,)\ 1/EJ = 1/3\ b/EJ$

$L^{XX}_{HG} = \int_o^b (1)\ 1/EJ\ dx = [\,x\,]_o^b\ 1/EJ$

$= (\,b\,)\ 1/EJ = b/EJ$

$L^{XX}_{GH} = \int_o^b (1)\ 1/EJ\ dx = [\,x\,]_o^b\ 1/EJ$

$= (\,b\,)\ 1/EJ = b/EJ$

$L^{Xo}_{GA} = \int_o^b (1/2\,x/b - 1/2\,x^2/b^2)\ Fb\ 1/EJ\ dx = [1/4\,x^2/b - 1/6\,x^3/b^2\,]_o^b\ Fb\ 1/EJ$

$= (1/4\,b - 1/6\,b\,)\ Fb\ 1/EJ = 1/12\ Fb^2/EJ$

$L^{Xo}_{AG} = \int_o^b (1/2\,x/b - 1/2\,x^2/b^2)\ Fb\ 1/EJ\ dx = [1/4\,x^2/b - 1/6\,x^3/b^2\,]_o^b\ Fb\ 1/EJ$

$= (1/4\,b - 1/6\,b\,)\ Fb\ 1/EJ = 1/12\ Fb^2/EJ$

$L^{Xo}_{HI} = \int_o^b (-3/2 + 2\,x/b - 1/2\,x^2/b^2)\ Fb\ 1/EJ\ dx = [-3/2\,x + x^2/b - 1/6\,x^3/b^2\,]_o^b\ Fb\ 1/EJ$

$= (-3/2\,b + b - 1/6\,b\,)\ Fb\ 1/EJ = -2/3\ Fb^2/EJ$

$L^{Xo}_{IH} = \int_o^b (-\,x/b - 1/2\,x^2/b^2)\ Fb\ 1/EJ\ dx = [-1/2\,x^2/b - 1/6\,x^3/b^2\,]_o^b\ Fb\ 1/EJ$

$= (-1/2\,b - 1/6\,b\,)\ Fb\ 1/EJ = -2/3\ Fb^2/EJ$

$L^{Xo}_{HG} = \int_o^b (1 - x/b\,)\ Fb\ 1/EJ\ dx - 1\ \ (-1)\ \ (-1)\ \ Fb^2/EJ = [\,x - 1/2\,x^2/b\,]_o^b\ Fb\ 1/EJ\ \ - 1\ \ (-1)\ \ (-1)\ \ Fb^2/EJ$

$= (\,b - 1/2\,b\,)\ Fb\ 1/EJ\ \ - 1\ \ (-1)\ \ (-1)\ \ Fb^2/EJ = -1/2\ \ Fb^2/EJ$

$L^{Xo}_{GH} = \int_o^b (\,x/b\,)\ Fb\ 1/EJ\ dx - 1\ \ (-1)\ \ (-1)\ \ Fb^2/EJ = [1/2\,x^2/b\,]_o^b\ Fb\ 1/EJ\ \ - 1\ \ (-1)\ \ (-1)\ \ Fb^2/EJ$

$= (1/2\,b\,)\ Fb\ 1/EJ\ \ - 1\ \ (-1)\ \ (-1)\ \ Fb^2/EJ = -1/2\ \ Fb^2/EJ$

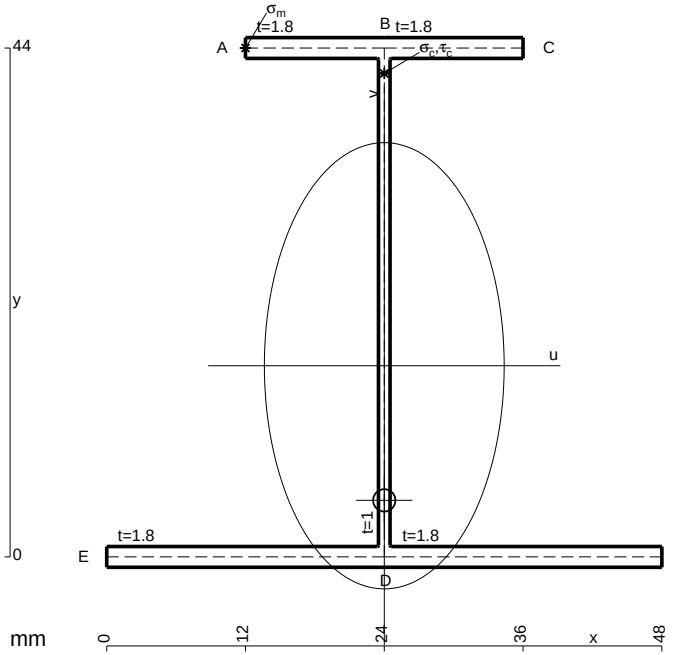

A = 173.6 mm^2
J_u = 64622. mm^4
J_v = 18662. mm^4
J_t = 154.6 mm^4
y_o = -11.64 mm
y_g = 16.53 mm
T_y = -1260. N
M_x = -556500. Nmm
x_m = 12. mm
y_m = 44. mm
u_m = -12. mm
v_m = 27.47 mm
$\sigma_m = -Mv/J_u$ = 236.6 N/mm^2
x_c = 24. mm
y_c = 44. mm
v_c = 27.47 mm
$\sigma_c = -Mv/J_u$ = 236.6 N/mm^2
$\tau_c = TS^*/tJ_u$ = 23.14 N/mm^2
$\tau_g = TS^*/tJ_u$ = 23.14 N/mm^2
t_c = 420. mm
$\sigma_o = \sqrt{\sigma^2 + 3\tau^2}$ = 240. N/mm^2

ESΣ05.xxxx.114

@ Adolfo Zavelani Rossi, Politecnico di Milano, vers.27.03.13 01.12.25

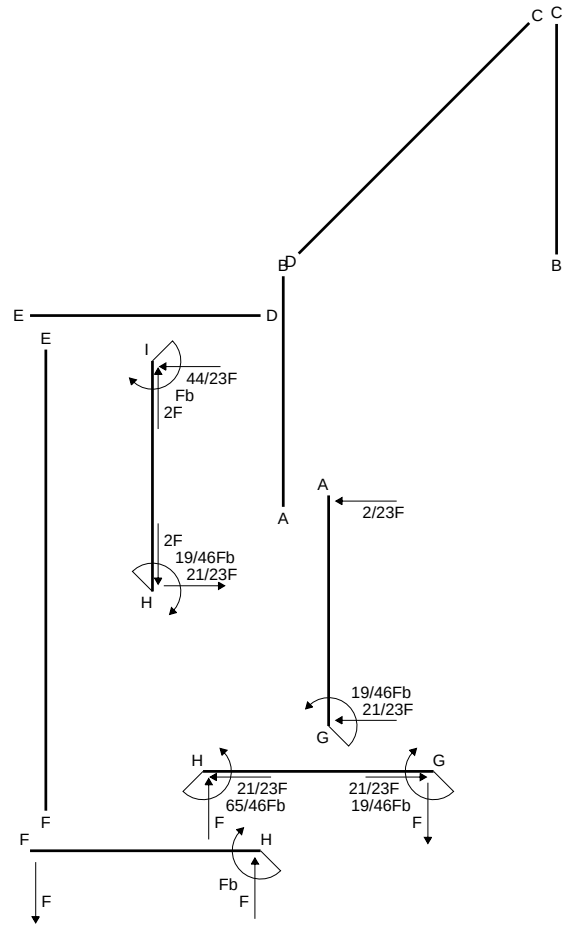
C C
B D
B
E D
E
I
44/23F
Fb
2F
A
A
2/23F
2F
19/46Fb
21/23F
H
19/46Fb
21/23F
G
H
G
21/23F
65/46Fb
21/23F
19/46Fb
F
F
F
H
Fb
F
F

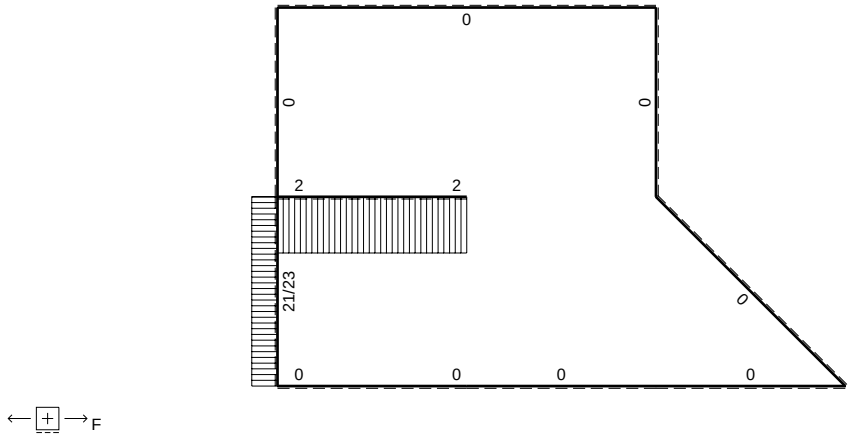
0
0
0
2
2
21/23
0
0
0
0
0
F

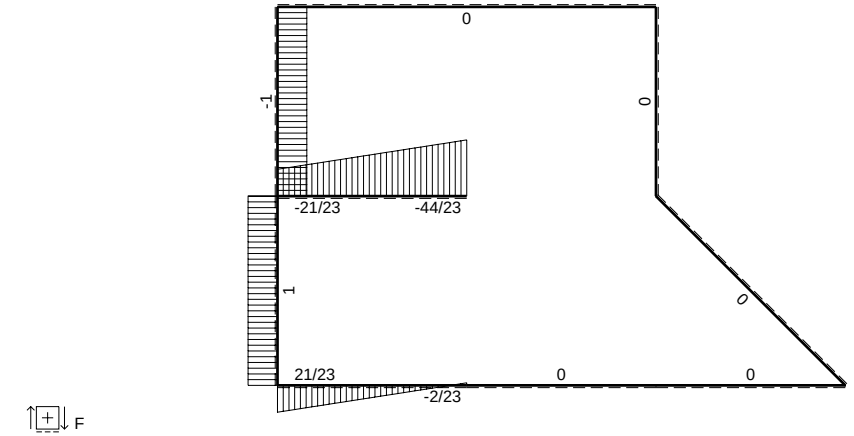
0
-1
0
-21/23
-44/23
1
0
21/23
0
0
-2/23
F

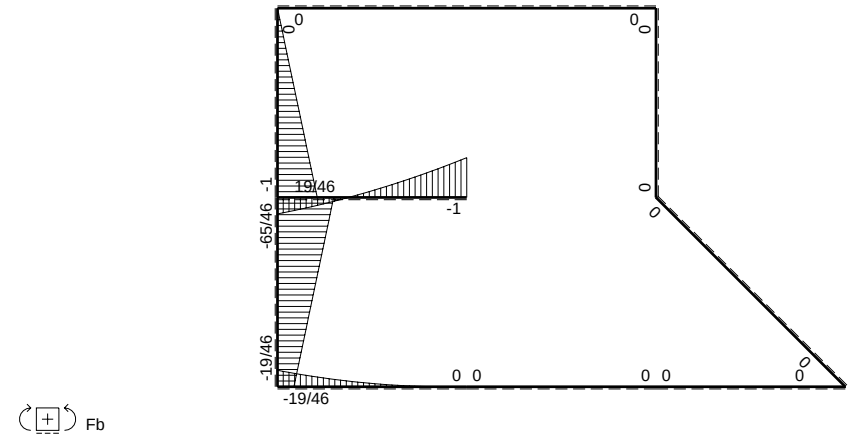
0
0
0
0
-1
19/46
-1
-65/46
0
0
-19/46
0 0
0 0
0
-19/46
Fb

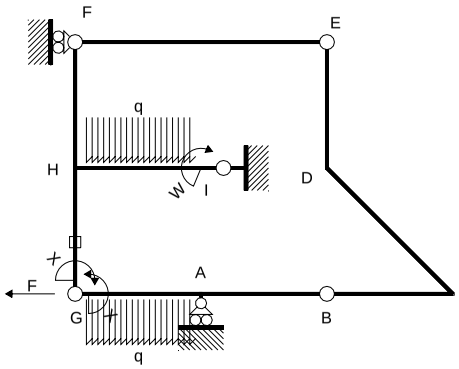

Schema di calcolo iperstatico

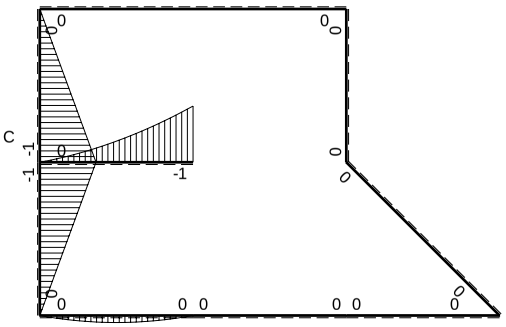

M_0 flessione da carichi assegnati

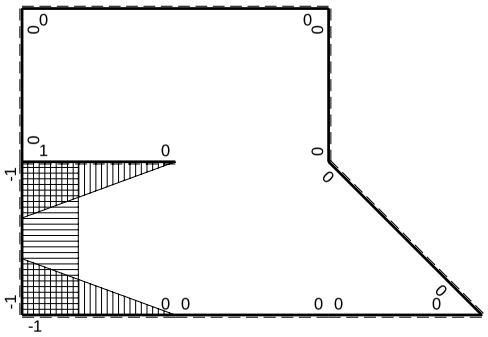

M_x flessione da iperstatica X=1

Quadro contributi PLV per iperstatica $X=W_{GA}$

→	$M_x(x)$	$M_0(x)$	M_xM_0	M_xM_x	$\int M_xM_0/EJdx$	$\int XM_xM_x/EJdx$
AB b	0	0	0	0	0	0
BA b	0	0	0	0		
BC b	0	0	0	0	0	0
CB b	0	0	0	0		
CD √2b	0	0	0	0	0	0
DE b	0	0	0	0	0	0
ED b	0	0	0	0		
EF 2b	0	0	0	0	0	0
FE 2b	0	0	0	0		
GA b	-1+x/b	$1/2Fx-1/2qx^2$	$-1/2Fx+Fx^2/b-1/2qx^3/b$	$1-2x/b+x^2/b^2$	$-1/24Fb^2/EJ$	1/3Xb/EJ
AG b	x/b	$-1/2Fx+1/2qx^2$	$-1/2Fx^2/b+1/2qx^3/b$	x^2/b^2		
FH b	0	-Fx	0	0	0	0
HF b	0	Fb-Fx	0	0		
HI b	1-x/b	$-1/2Fx-1/2qx^2$	$-1/2Fx+1/2qx^3/b$	$1-2x/b+x^2/b^2$	$-1/8Fb^2/EJ$	1/3Xb/EJ
IH b	-x/b	$Fb-3/2Fx+1/2qx^2$	$-Fx+3/2Fx^2/b-1/2qx^3/b$	x^2/b^2		
HG b	-1	-Fb+Fx	Fb-Fx	1	$1/2Fb^2/EJ$	Xb/EJ
GH b	1	Fx	Fx	1		
HG	elongazione asta $N_{1HG}\varepsilon_{HG}L_{HG}$				$-Fb^2/EJ$	
A	molla nodo $-V_{1A}(V_{0A}+XV_{1A})/k_A$				$-1/8Fb^2/EJ$	1/4Xb/EJ
	totali				$-19/24Fb^2/EJ$	23/12Xb/EJ
	iperstatica $X=W_{GA}$				19/46Fb	

Sviluppi di calcolo iperstatica

$L^{XX}_{GA} = \int_o^b (1 - 2\,x/b + x^2/b^2)\ 1/EJ\ dx = [\,x - x^2/b + 1/3\,x^3/b^2\,]_o^b\ 1/EJ$

$= (\,b - b + 1/3\,b\,)\ 1/EJ = 1/3\ b/EJ$

$L^{XX}_{AG} = \int_o^b (\,x^2/b^2\,)\ 1/EJ\ dx = [1/3\,x^3/b^2\,]_o^b\ 1/EJ$

$= (1/3\,b\,)\ 1/EJ = 1/3\ b/EJ$

$L^{XX}_{HI} = \int_o^b (1 - 2\,x/b + x^2/b^2)\ 1/EJ\ dx = [\,x - x^2/b + 1/3\,x^3/b^2\,]_o^b\ 1/EJ$

$= (\,b - b + 1/3\,b\,)\ 1/EJ = 1/3\ b/EJ$

$L^{XX}_{IH} = \int_o^b (\,x^2/b^2\,)\ 1/EJ\ dx = [1/3\,x^3/b^2\,]_o^b\ 1/EJ$

$= (1/3\,b\,)\ 1/EJ = 1/3\ b/EJ$

$L^{XX}_{HG} = \int_o^b (1)\ 1/EJ\ dx = [\,x\,]_o^b\ 1/EJ$

$= (\,b\,)\ 1/EJ = b/EJ$

$L^{XX}_{GH} = \int_o^b (1)\ 1/EJ\ dx = [\,x\,]_o^b\ 1/EJ$

$= (\,b\,)\ 1/EJ = b/EJ$

$L^{Xo}_{GA} = \int_o^b (-1/2\,x/b + x^2/b^2 - 1/2\,x^3/b^3)\ Fb\ 1/EJ\ dx = [-1/4\,x^2/b + 1/3\,x^3/b^2 - 1/8\,x^4/b^3\,]_o^b\ Fb\ 1/EJ$

$= (-1/4\,b + 1/3\,b - 1/8\,b\,)\ Fb\ 1/EJ = -1/24\ Fb^2/EJ$

$L^{Xo}_{AG} = \int_o^b (-1/2\,x^2/b^2 + 1/2\,x^3/b^3)\ Fb\ 1/EJ\ dx = [-1/6\,x^3/b^2 + 1/8\,x^4/b^3\,]_o^b\ Fb\ 1/EJ$

$= (-1/6\,b + 1/8\,b\,)\ Fb\ 1/EJ = -1/24\ Fb^2/EJ$

$L^{Xo}_{HI} = \int_o^b (-1/2\,x/b + 1/2\,x^3/b^3)\ Fb\ 1/EJ\ dx = [-1/4\,x^2/b + 1/8\,x^4/b^3\,]_o^b\ Fb\ 1/EJ$

$= (-1/4\,b + 1/8\,b\,)\ Fb\ 1/EJ = -1/8\ Fb^2/EJ$

$L^{Xo}_{IH} = \int_o^b (-\,x/b + 3/2\,x^2/b^2 - 1/2\,x^3/b^3)\ Fb\ 1/EJ\ dx = [-1/2\,x^2/b + 1/2\,x^3/b^2 - 1/8\,x^4/b^3\,]_o^b\ Fb\ 1/EJ$

$= (-1/2\,b + 1/2\,b - 1/8\,b\,)\ Fb\ 1/EJ = -1/8\ Fb^2/EJ$

$L^{Xo}_{HG} = \int_o^b (1 - x/b)\ Fb\ 1/EJ\ dx - 1\ \ (-1)\ \ (-1)\ \ Fb^2/EJ = [\,x - 1/2\,x^2/b\,]_o^b\ Fb\ 1/EJ\ \ - 1\ \ (-1)\ \ (-1)\ \ Fb^2/EJ$

$= (\,b - 1/2\,b\,)\ Fb\ 1/EJ\ \ - 1\ \ (-1)\ \ (-1)\ \ Fb^2/EJ = -1/2\ \ Fb^2/EJ$

$L^{Xo}_{GH} = \int_o^b (\,x/b\,)\ Fb\ 1/EJ\ dx - 1\ \ (-1)\ \ (-1)\ \ Fb^2/EJ = [1/2\,x^2/b\,]_o^b\ Fb\ 1/EJ\ \ - 1\ \ (-1)\ \ (-1)\ \ Fb^2/EJ$

$= (1/2\,b\,)\ Fb\ 1/EJ\ \ - 1\ \ (-1)\ \ (-1)\ \ Fb^2/EJ = -1/2\ \ Fb^2/EJ$

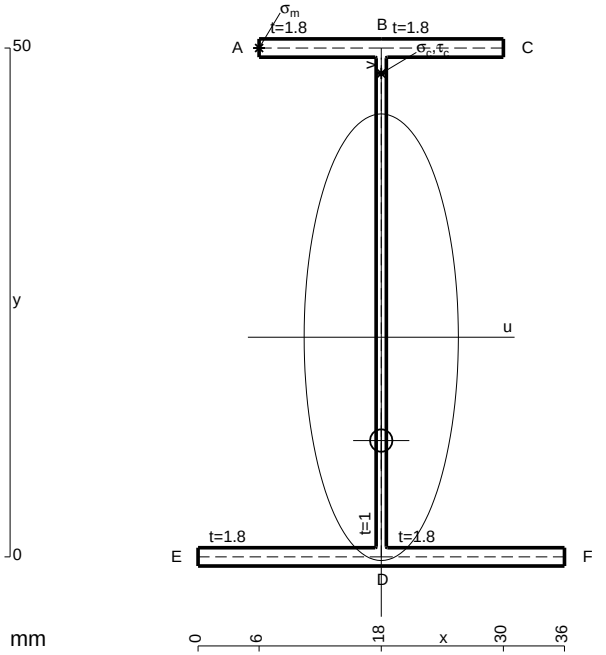

A = 158. mm^2
J_u = 76071. mm^4
J_v = 9072. mm^4
J_t = 133.3 mm^4
y_o = -10.15 mm
y_g = 21.58 mm
T_y = -830. N
M_x = -531200. Nmm
x_m = 6. mm
y_m = 50. mm
u_m = -12. mm
v_m = 28.42 mm
$\sigma_m = -Mv/J_u$ = 198.4 N/mm^2
x_c = 18. mm
y_c = 50. mm
v_c = 28.42 mm
$\sigma_c = -Mv/J_u$ = 198.4 N/mm^2
$\tau_c = TS^*/tJ_u$ = 13.39 N/mm^2
$\tau_g = TS^*/tJ_u$ = 13.39 N/mm^2
t_c = 830. mm
$\sigma_o = \sqrt{\sigma^2 + 3\tau^2}$ = 199.8 N/mm^2

ESΣ05.xxxx.115

@ Adolfo Zavelani Rossi, Politecnico di Milano, vers.27.03.13 01.12.25

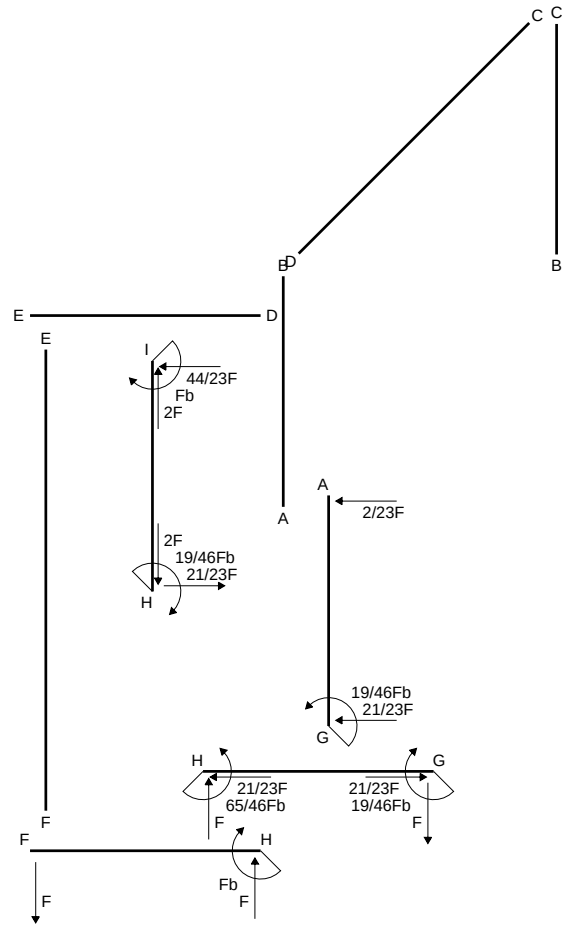
C C
B D
B
E D
E
I
44/23F
Fb
2F
A
A
2/23F
2F
19/46Fb
21/23F
H
19/46Fb
21/23F
G
H
G
21/23F
65/46Fb
21/23F
19/46Fb
F
F
F
F
H
Fb
F
F

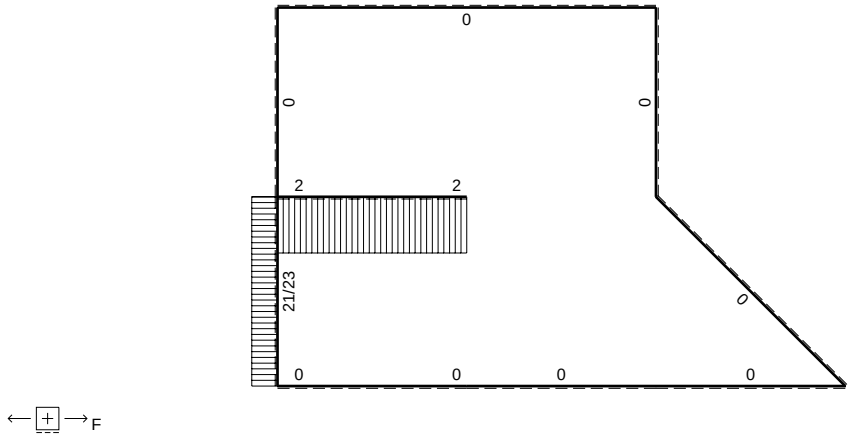
0
0
0
2
2
21/23
0
0
0
0
0
F

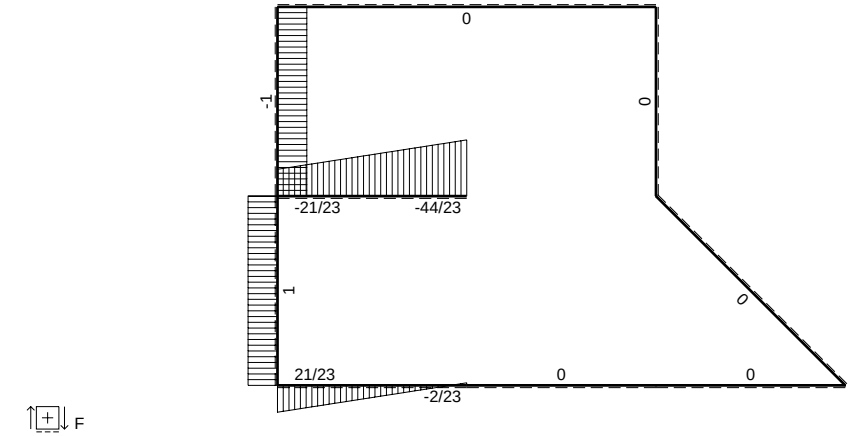
0
-1
0
-21/23
-44/23
1
0
21/23
0
0
-2/23
F

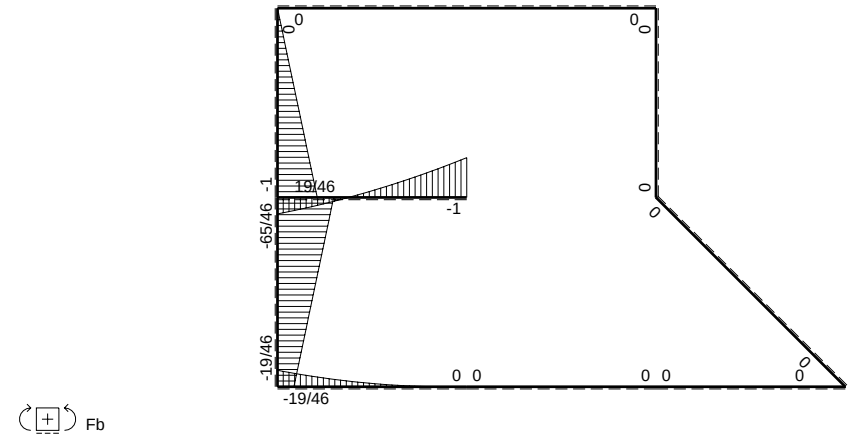
0
0
0
0
-1
19/46
-1
0
-65/46
0
-19/46
0 0
0 0
0
-19/46
Fb

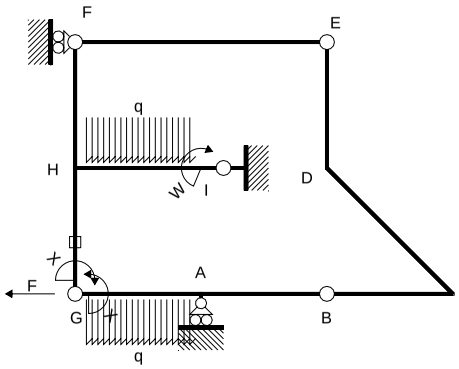

Schema di calcolo iperstatico

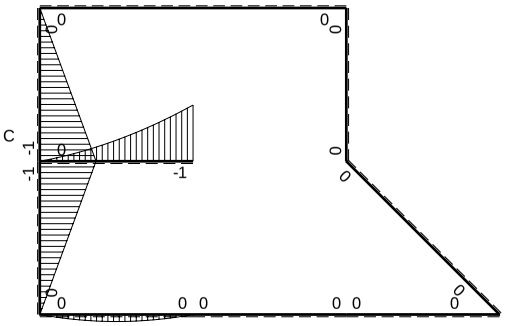

M_0 flessione da carichi assegnati

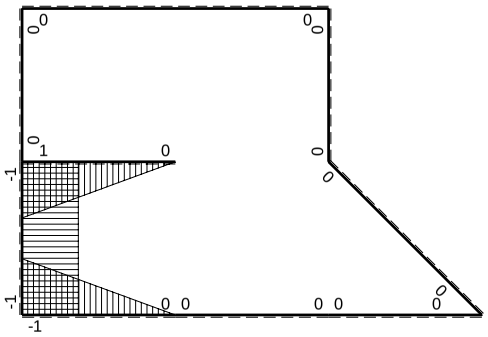

M_x flessione da iperstatica X=1

Quadro contributi PLV per iperstatica $X=W_{GA}$

→	$M_x(x)$	$M_0(x)$	M_xM_0	M_xM_x	$\int M_xM_0/EJdx$	$\int XM_xM_x/EJdx$
AB b	0	0	0	0	0	0
BA b	0	0	0	0		
BC b	0	0	0	0	0	0
CB b	0	0	0	0		
CD √2b	0	0	0	0	0	0
DE b	0	0	0	0	0	0
ED b	0	0	0	0		
EF 2b	0	0	0	0	0	0
FE 2b	0	0	0	0		
GA b	-1+x/b	$1/2Fx-1/2qx^2$	$-1/2Fx+Fx^2/b-1/2qx^3/b$	$1-2x/b+x^2/b^2$	$-1/24Fb^2/EJ$	1/3Xb/EJ
AG b	x/b	$-1/2Fx+1/2qx^2$	$-1/2Fx^2/b+1/2qx^3/b$	x^2/b^2		
FH b	0	-Fx	0	0	0	0
HF b	0	Fb-Fx	0	0		
HI b	1-x/b	$-1/2Fx-1/2qx^2$	$-1/2Fx+1/2qx^3/b$	$1-2x/b+x^2/b^2$	$-1/8Fb^2/EJ$	1/3Xb/EJ
IH b	-x/b	$Fb-3/2Fx+1/2qx^2$	$-Fx+3/2Fx^2/b-1/2qx^3/b$	x^2/b^2		
HG b	-1	-Fb+Fx	Fb-Fx	1	$1/2Fb^2/EJ$	Xb/EJ
GH b	1	Fx	Fx	1		
HG	elongazione asta $N_{1HG}\varepsilon_{HG}L_{HG}$				$-Fb^2/EJ$	
A	molla nodo $-V_{1A}(V_{0A}+XV_{1A})/k_A$				$-1/8Fb^2/EJ$	1/4Xb/EJ
	totali				$-19/24Fb^2/EJ$	23/12Xb/EJ
	iperstatica $X=W_{GA}$				19/46Fb	

Sviluppi di calcolo iperstatica

$L^{XX}_{GA} = \int_o^b (1 - 2\,x/b + x^2/b^2)\ 1/EJ\ dx = [\,x - x^2/b + 1/3\,x^3/b^2\,]_o^b\ 1/EJ$

$= (\,b - b + 1/3\,b\,)\ 1/EJ = 1/3\ b/EJ$

$L^{XX}_{AG} = \int_o^b (\,x^2/b^2\,)\ 1/EJ\ dx = [1/3\,x^3/b^2\,]_o^b\ 1/EJ$

$= (1/3\,b\,)\ 1/EJ = 1/3\ b/EJ$

$L^{XX}_{HI} = \int_o^b (1 - 2\,x/b + x^2/b^2)\ 1/EJ\ dx = [\,x - x^2/b + 1/3\,x^3/b^2\,]_o^b\ 1/EJ$

$= (\,b - b + 1/3\,b\,)\ 1/EJ = 1/3\ b/EJ$

$L^{XX}_{IH} = \int_o^b (\,x^2/b^2\,)\ 1/EJ\ dx = [1/3\,x^3/b^2\,]_o^b\ 1/EJ$

$= (1/3\,b\,)\ 1/EJ = 1/3\ b/EJ$

$L^{XX}_{HG} = \int_o^b (1)\ 1/EJ\ dx = [\,x\,]_o^b\ 1/EJ$

$= (\,b\,)\ 1/EJ = b/EJ$

$L^{XX}_{GH} = \int_o^b (1)\ 1/EJ\ dx = [\,x\,]_o^b\ 1/EJ$

$= (\,b\,)\ 1/EJ = b/EJ$

$L^{Xo}_{GA} = \int_o^b (-1/2\,x/b + x^2/b^2 - 1/2\,x^3/b^3)\ Fb\ 1/EJ\ dx = [-1/4\,x^2/b + 1/3\,x^3/b^2 - 1/8\,x^4/b^3\,]_o^b\ Fb\ 1/EJ$

$= (-1/4\,b + 1/3\,b - 1/8\,b\,)\ Fb\ 1/EJ = -1/24\ Fb^2/EJ$

$L^{Xo}_{AG} = \int_o^b (-1/2\,x^2/b^2 + 1/2\,x^3/b^3)\ Fb\ 1/EJ\ dx = [-1/6\,x^3/b^2 + 1/8\,x^4/b^3\,]_o^b\ Fb\ 1/EJ$

$= (-1/6\,b + 1/8\,b\,)\ Fb\ 1/EJ = -1/24\ Fb^2/EJ$

$L^{Xo}_{HI} = \int_o^b (-1/2\,x/b + 1/2\,x^3/b^3)\ Fb\ 1/EJ\ dx = [-1/4\,x^2/b + 1/8\,x^4/b^3\,]_o^b\ Fb\ 1/EJ$

$= (-1/4\,b + 1/8\,b\,)\ Fb\ 1/EJ = -1/8\ Fb^2/EJ$

$L^{Xo}_{IH} = \int_o^b (-\,x/b + 3/2\,x^2/b^2 - 1/2\,x^3/b^3)\ Fb\ 1/EJ\ dx = [-1/2\,x^2/b + 1/2\,x^3/b^2 - 1/8\,x^4/b^3\,]_o^b\ Fb\ 1/EJ$

$= (-1/2\,b + 1/2\,b - 1/8\,b\,)\ Fb\ 1/EJ = -1/8\ Fb^2/EJ$

$L^{Xo}_{HG} = \int_o^b (1 - x/b\,)\ Fb\ 1/EJ\ dx - 1\ \ (-1)\ \ (-1)\ \ Fb^2/EJ = [\,x - 1/2\,x^2/b\,]_o^b\ Fb\ 1/EJ\ \ - 1\ \ (-1)\ \ (-1)\ \ Fb^2/EJ$

$= (\,b - 1/2\,b\,)\ Fb\ 1/EJ\ \ - 1\ \ (-1)\ \ (-1)\ \ Fb^2/EJ = -1/2\ \ Fb^2/EJ$

$L^{Xo}_{GH} = \int_o^b (\,x/b\,)\ Fb\ 1/EJ\ dx - 1\ \ (-1)\ \ (-1)\ \ Fb^2/EJ = [1/2\,x^2/b\,]_o^b\ Fb\ 1/EJ\ \ - 1\ \ (-1)\ \ (-1)\ \ Fb^2/EJ$

$= (1/2\,b\,)\ Fb\ 1/EJ\ \ - 1\ \ (-1)\ \ (-1)\ \ Fb^2/EJ = -1/2\ \ Fb^2/EJ$

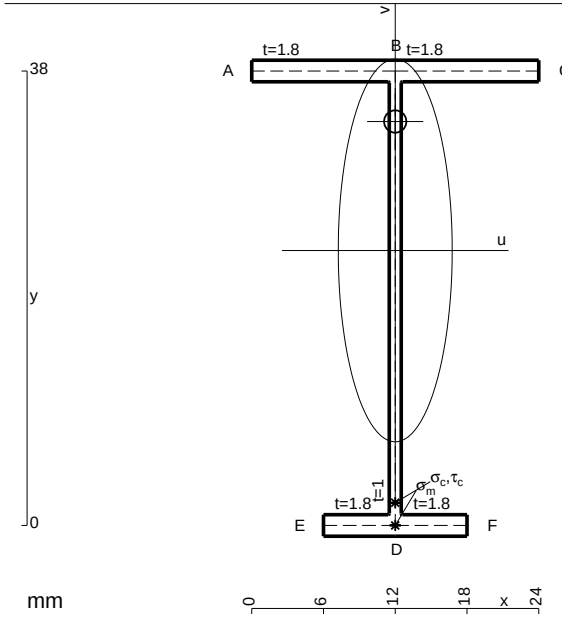

A = 102.8 mm^2
J_u = 26327. mm^4
J_v = 2333. mm^4
J_t = 82.65 mm^4
y_o = 10.79 mm
y_g = 22.99 mm
T_y = -470. N
M_x = -239700. Nmm
x_m = 12. mm
v_m = -22.99 mm
$\sigma_m = -Mv/J_u$ = -209.3 N/mm^2
y_c = 3. mm
u_c = -12. mm
v_c = -19.99 mm
$\sigma_c = -Mv/J_u$ = -209.3 N/mm^2
$\tau_c = TS^*/tJ_u$ = 8.866 N/mm^2
$\tau_g = TS^*/tJ_u$ = 8.866 N/mm^2
t_c = 470. mm
$\sigma_o = \sqrt{\sigma^2 + 3\tau^2}$ = 209.9 N/mm^2

ESΣ05.xxxx.116

@ Adolfo Zavelani Rossi, Politecnico di Milano, vers.27.03.13 01.12.25

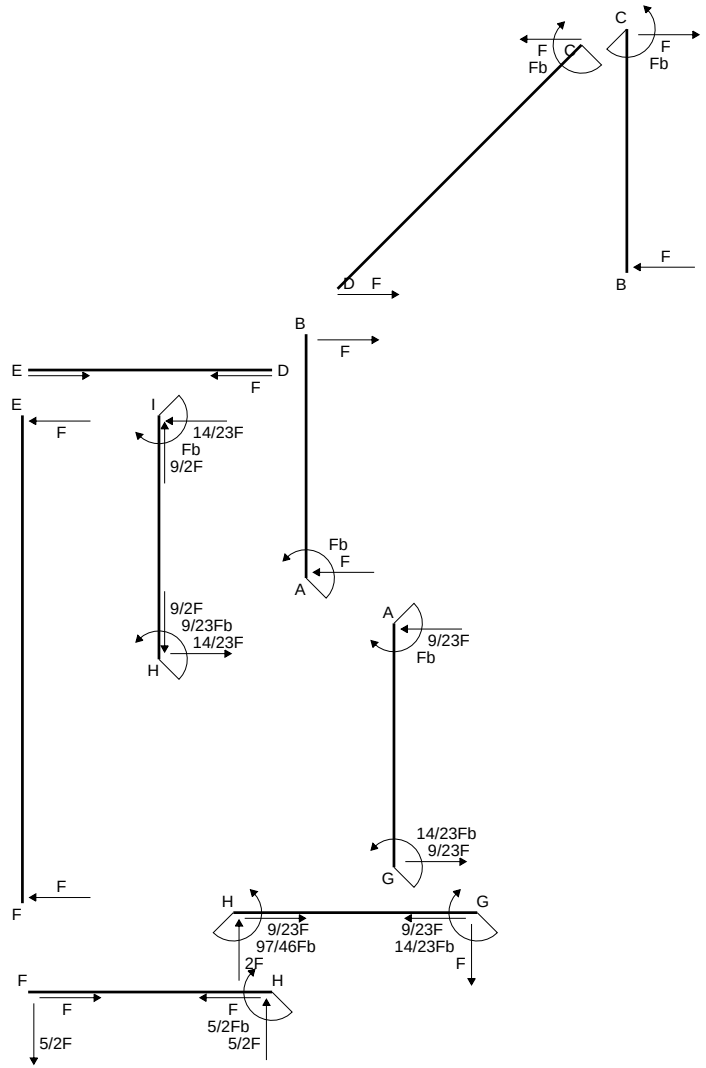
C
F
Fb
C
F
Fb
F
B
D
F
B
F
E
D
F
E
F
I
14/23F
Fb
9/2F
Fb
F
A
9/2F
9/23Fb
14/23F
H
A
9/23F
Fb
14/23Fb
9/23F
G
F
F
H
G
9/23F
97/46Fb
2F
9/23F
14/23Fb
F
F
H
F
F
5/2Fb
5/2F
5/2F

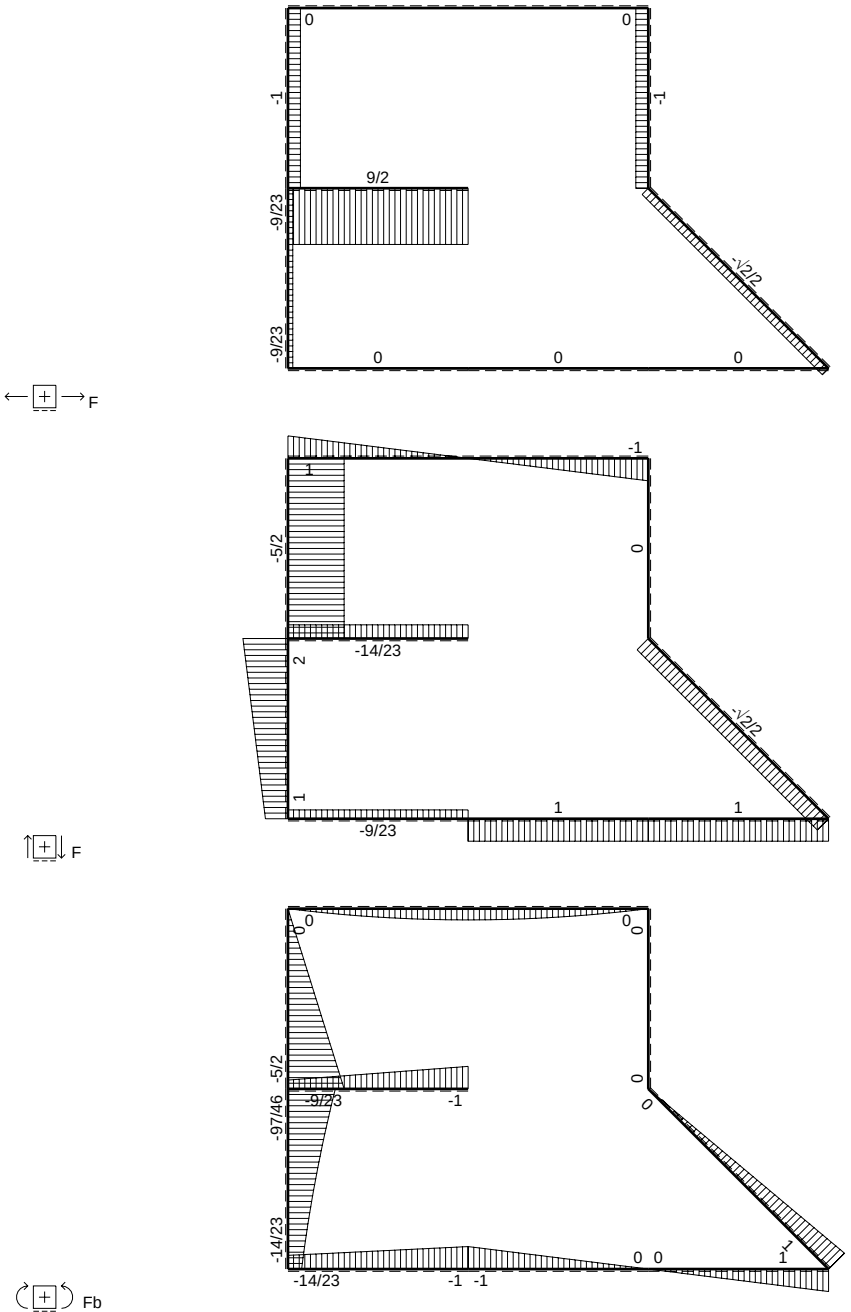
F
0
0
-1
-1
9/2
-9/23
-√2/2
-9/23
0
0
0
F
-1
1
-5/2
0
-14/23
2
-√2/2
1
1
1
-9/23
Fb
0
0
0
0
-5/2
-9/23
-1
-97/46
0
0
-14/23
0 0
1
-14/23
-1 -1

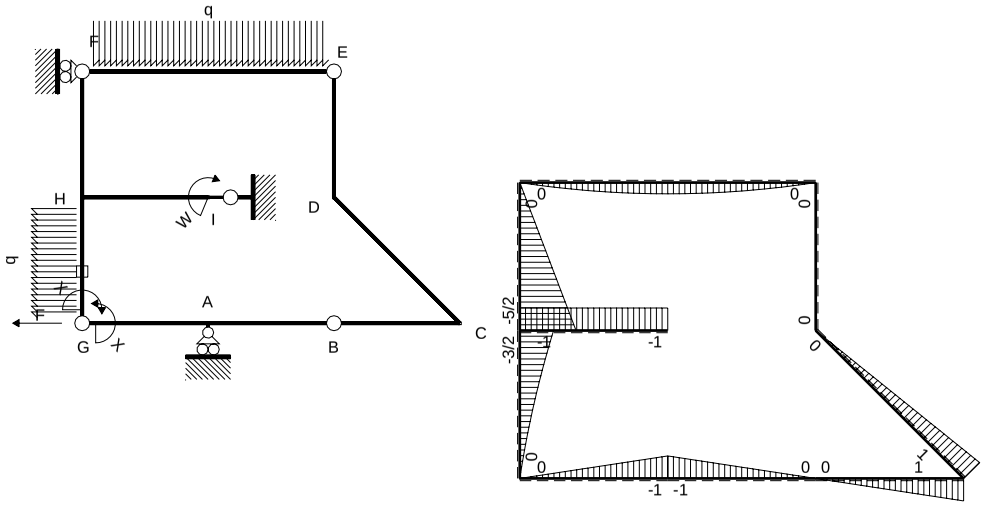

M_0 flessione da carichi assegnati

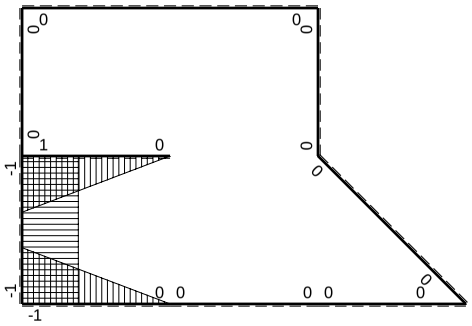

M_x flessione da iperstatica X=1

Quadro contributi PLV per iperstatica $X=W_{GA}$

→	$M_x(x)$	$M_0(x)$	M_xM_0	M_xM_x	$\int M_xM_0/EJdx$	$\int XM_xM_x/EJdx$
AB b	0	-Fb+Fx	0	0	0	0
BA b	0	Fx	0	0		
BC b	0	Fx	0	0	0	0
CB b	0	-Fb+Fx	0	0		
CD √2b	0	Fb-√2/2Fx	0	0	0	0
DE b	0	0	0	0	0	0
ED b	0	0	0	0		
EF 2b	0	$-Fx+1/2qx^2$	0	0	0	0
FE 2b	0	$Fx-1/2qx^2$	0	0		
GA b	-1+x/b	-Fx	$Fx-Fx^2/b$	$1-2x/b+x^2/b^2$	$1/6Fb^2/EJ$	1/3Xb/EJ
AG b	x/b	Fb-Fx	$Fx-Fx^2/b$	x^2/b^2		
FH b	0	-5/2Fx	0	0	0	0
HF b	0	5/2Fb-5/2Fx	0	0		
HI b	1-x/b	-Fb	-Fb+Fx	$1-2x/b+x^2/b^2$	$-1/2Fb^2/EJ$	1/3Xb/EJ
IH b	-x/b	Fb	-Fx	x^2/b^2		
HG b	-1	$-3/2Fb+2Fx-1/2qx^2$	$3/2Fb-2Fx+1/2Fx^2/b$	1	$2/3Fb^2/EJ$	Xb/EJ
GH b	1	$Fx+1/2qx^2$	$Fx+1/2Fx^2/b$	1		
HG	elongazione asta $N_{1HG}\varepsilon_{HG}L_{HG}$				$-Fb^2/EJ$	
A	molla nodo $-V_{1A}(V_{0A}+XV_{1A})/k_A$				$-1/2Fb^2/EJ$	1/4Xb/EJ
	totali				$-7/6Fb^2/EJ$	23/12Xb/EJ
	iperstatica $X=W_{GA}$				14/23Fb	

Sviluppi di calcolo iperstatica

PROCEDIMENTO E RISULTATI 237413 ESΣ05.xxxx.117

@ Adolfo Zavelani Rossi, Politecnico di Milano, vers.27.03.13 01.12.25

$L^{XX}_{GA} = \int_o^b (1 - 2\,x/b + x^2/b^2)\ 1/EJ\ dx = [\,x - x^2/b + 1/3\,x^3/b^2\,]_o^b\ 1/EJ$

$= (\,b - b + 1/3\,b\,)\ 1/EJ = 1/3\ b/EJ$

$L^{XX}_{AG} = \int_o^b (\,x^2/b^2\,)\ 1/EJ\ dx = [1/3\,x^3/b^2\,]_o^b\ 1/EJ$

$= (1/3\,b\,)\ 1/EJ = 1/3\ b/EJ$

$L^{XX}_{HI} = \int_o^b (1 - 2\,x/b + x^2/b^2)\ 1/EJ\ dx = [\,x - x^2/b + 1/3\,x^3/b^2\,]_o^b\ 1/EJ$

$= (\,b - b + 1/3\,b\,)\ 1/EJ = 1/3\ b/EJ$

$L^{XX}_{IH} = \int_o^b (\,x^2/b^2\,)\ 1/EJ\ dx = [1/3\,x^3/b^2\,]_o^b\ 1/EJ$

$= (1/3\,b\,)\ 1/EJ = 1/3\ b/EJ$

$L^{XX}_{HG} = \int_o^b (1)\ 1/EJ\ dx = [\,x\,]_o^b\ 1/EJ$

$= (\,b\,)\ 1/EJ = b/EJ$

$L^{XX}_{GH} = \int_o^b (1)\ 1/EJ\ dx = [\,x\,]_o^b\ 1/EJ$

$= (\,b\,)\ 1/EJ = b/EJ$

$L^{Xo}_{GA} = \int_o^b (\,x/b - x^2/b^2\,)\ Fb\ 1/EJ\ dx = [1/2\,x^2/b - 1/3\,x^3/b^2\,]_o^b\ Fb\ 1/EJ$

$= (1/2\,b - 1/3\,b\,)\ Fb\ 1/EJ = 1/6\ Fb^2/EJ$

$L^{Xo}_{AG} = \int_o^b (\,x/b - x^2/b^2\,)\ Fb\ 1/EJ\ dx = [1/2\,x^2/b - 1/3\,x^3/b^2\,]_o^b\ Fb\ 1/EJ$

$= (1/2\,b - 1/3\,b\,)\ Fb\ 1/EJ = 1/6\ Fb^2/EJ$

$L^{Xo}_{HI} = \int_o^b (-1 + x/b\,)\ Fb\ 1/EJ\ dx = [-\,x + 1/2\,x^2/b\,]_o^b\ Fb\ 1/EJ$

$= (-\,b + 1/2\,b\,)\ Fb\ 1/EJ = -1/2\ Fb^2/EJ$

$L^{Xo}_{IH} = \int_o^b (-\,x/b\,)\ Fb\ 1/EJ\ dx = [-1/2\,x^2/b\,]_o^b\ Fb\ 1/EJ$

$= (-1/2\,b\,)\ Fb\ 1/EJ = -1/2\ Fb^2/EJ$

$L^{Xo}_{HG} = \int_o^b (3/2 - 2\,x/b + 1/2\,x^2/b^2\,)\ Fb\ 1/EJ\ dx - 1\ \ (-1)\ \ (-1)\ \ Fb^2/EJ$

$= [3/2\,x - x^2/b + 1/6\,x^3/b^2\,]_o^b\ Fb\ 1/EJ\ -\ 1\ \ (-1)\ \ (-1)\ \ Fb^2/EJ$

$= (3/2\,b - b + 1/6\,b\,)\ Fb\ 1/EJ\ -\ 1\ \ (-1)\ \ (-1)\ \ Fb^2/EJ = -1/3\ \ Fb^2/EJ$

$L^{Xo}_{GH} = \int_o^b (\,x/b + 1/2\,x^2/b^2\,)\ Fb\ 1/EJ\ dx - 1\ \ (-1)\ \ (-1)\ \ Fb^2/EJ$

$= [1/2\,x^2/b + 1/6\,x^3/b^2\,]_o^b\ Fb\ 1/EJ\ -\ 1\ \ (-1)\ \ (-1)\ \ Fb^2/EJ$

$= (1/2\,b + 1/6\,b\,)\ Fb\ 1/EJ\ -\ 1\ \ (-1)\ \ (-1)\ \ Fb^2/EJ = -1/3\ \ Fb^2/EJ$

PROCEDIMENTO E RISULTATI 237413 ESΣ05.xxxx.117

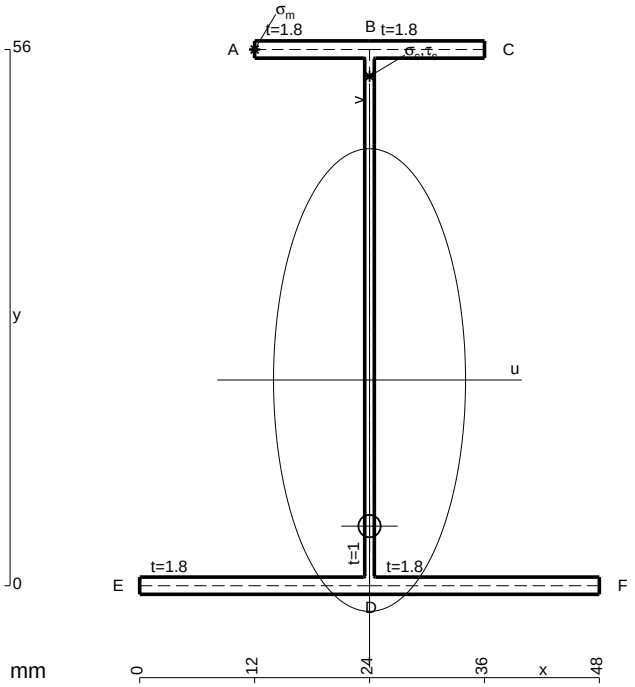

A = 185.6 mm^2
J_u = 108358. mm^4
J_v = 18662. mm^4
J_t = 158.6 mm^4
y_o = -15.26 mm
y_g = 21.48 mm
N = -340. N
T_y = -850. N
M_x = -688500. Nmm
x_m = 12. mm
y_m = 56. mm
u_m = -12. mm
v_m = 34.52 mm
$\sigma_m = N/A - Mv/J_u$ = 217.5 N/mm^2
x_c = 24. mm
y_c = 56. mm
v_c = 34.52 mm
$\sigma_c = N/A - Mv/J_u$ = 217.5 N/mm^2
$\tau_c = TS^*/tJ_u$ = 11.7 N/mm^2
$\tau_g = TS^*/tJ_u$ = 11.7 N/mm^2
t_c = 340. mm
$\sigma_o = \sqrt{\sigma^2 + 3\tau^2}$ = 218.4 N/mm^2

@ Adolfo Zavelani Rossi, Politecnico di Milano, vers.27.03.13 01.12.25

ESΣ05.xxxx.117

@ Adolfo Zavelani Rossi, Politecnico di Milano, vers.27.03.13 01.12.25

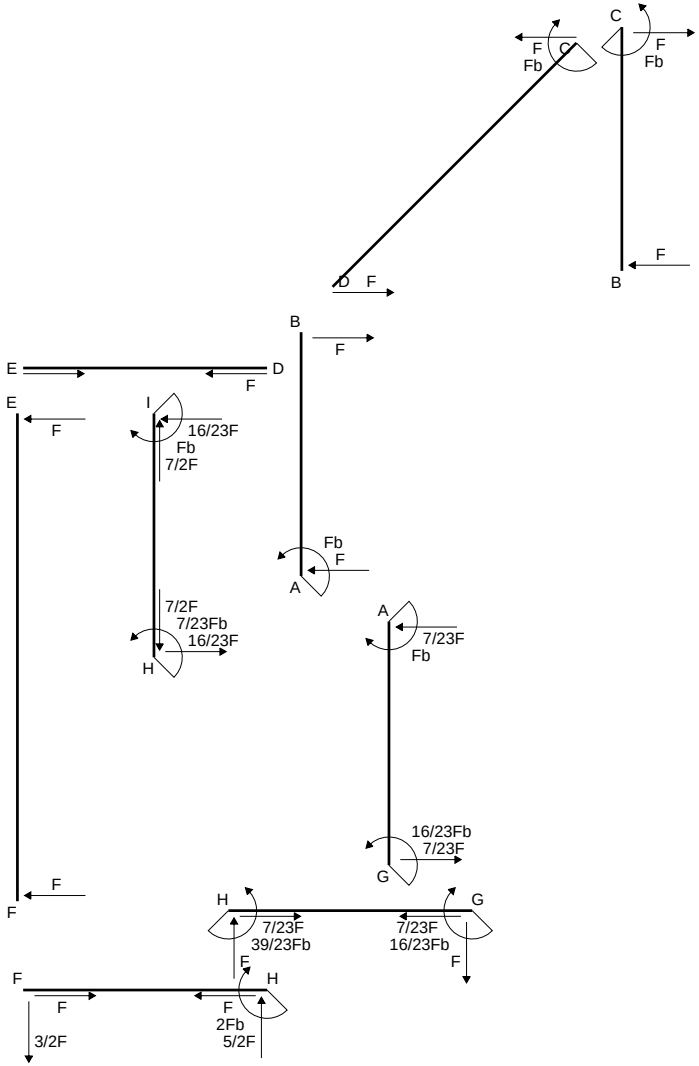
C
F
Fb
C
F
Fb
D
F
B
F
B
F
E
D
F
E
F
I
16/23F
Fb
7/2F
Fb
F
A
7/2F
7/23Fb
16/23F
H
A
7/23F
Fb
16/23Fb
7/23F
G
F
F
H
G
7/23F
39/23Fb
7/23F
16/23Fb
F
F
F
H
F
F
2Fb
5/2F
3/2F

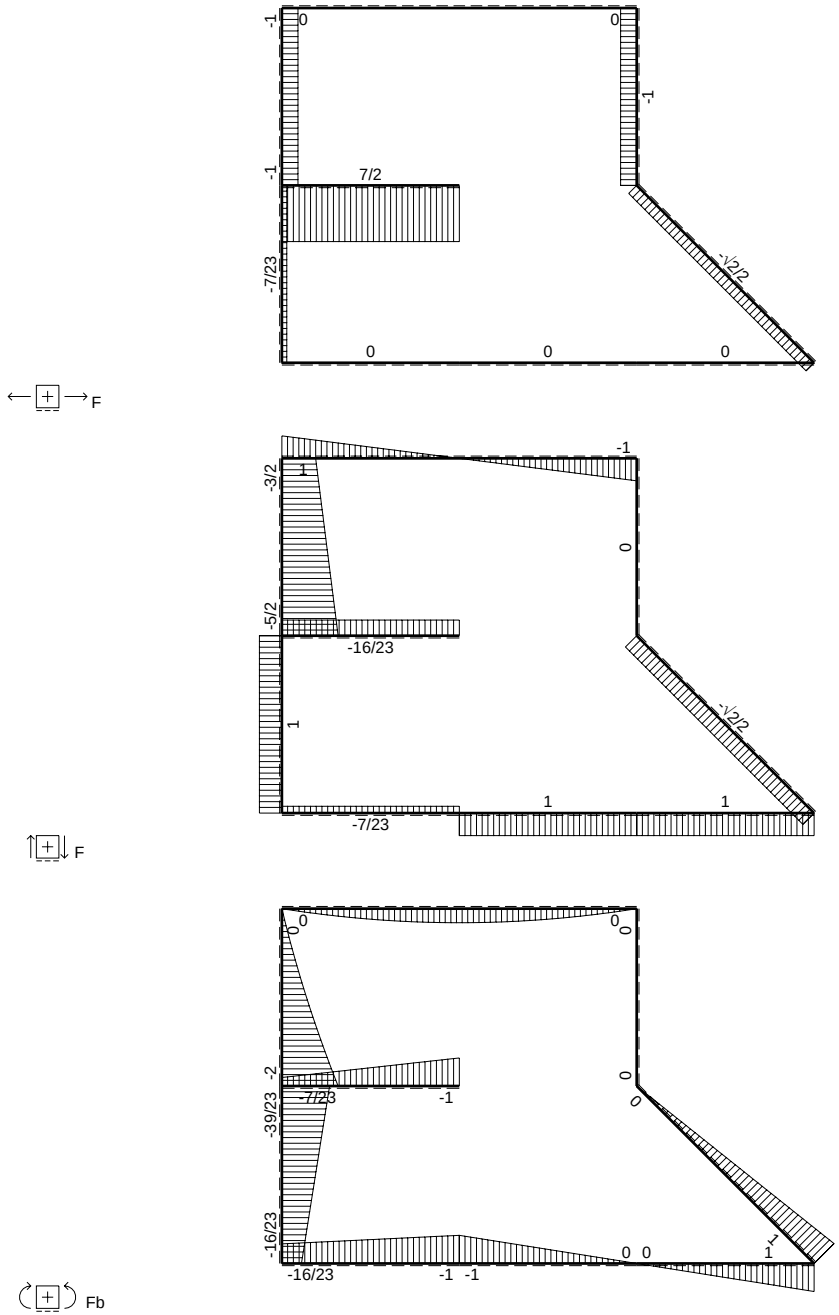
-1
0
0
-1
-1
7/2
-7/23
-√2/2
0
0
0
F
-1
-3/2
1
0
-5/2
-16/23
-√2/2
1
1
1
-7/23
F
0
0
0
0
-2
-7/23
-1
0
0
-39/23
-16/23
0 0
1
1
-16/23
-1 -1
Fb

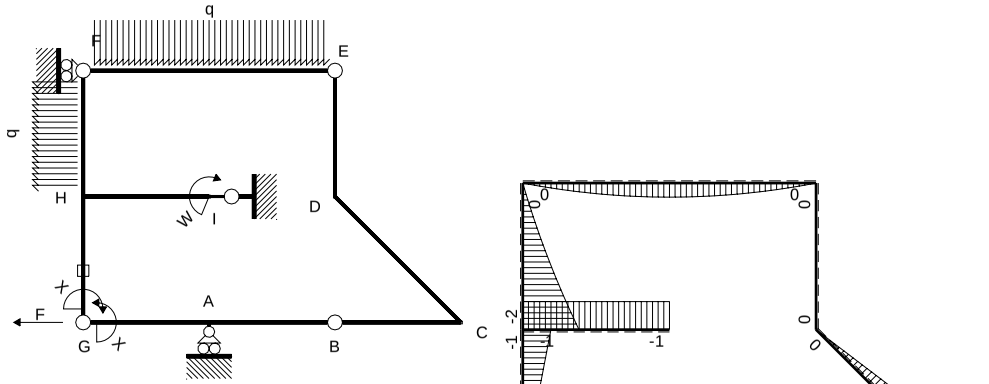

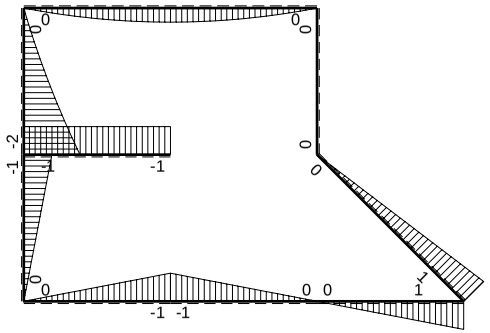

M_0 flessione da carichi assegnati

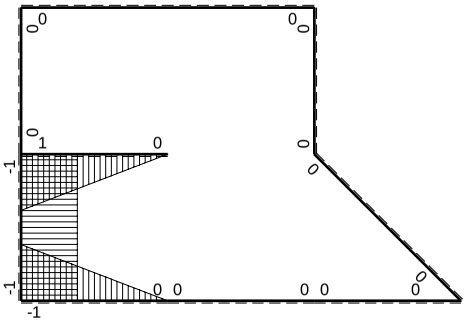

M_x flessione da iperstatica X=1

Quadro contributi PLV per iperstatica $X=W_{GA}$

→	$M_x(x)$	$M_0(x)$	M_xM_0	M_xM_x	$\int M_xM_0/EJdx$	$\int XM_xM_x/EJdx$
AB b	0	-Fb+Fx	0	0	0	0
BA b	0	Fx	0	0		
BC b	0	Fx	0	0	0	0
CB b	0	-Fb+Fx	0	0		
CD √2b	0	Fb-√2/2Fx	0	0	0	0
DE b	0	0	0	0	0	0
ED b	0	0	0	0		
EF 2b	0	$-Fx+1/2qx^2$	0	0	0	0
FE 2b	0	$Fx-1/2qx^2$	0	0		
GA b	-1+x/b	-Fx	$Fx-Fx^2/b$	$1-2x/b+x^2/b^2$	$1/6Fb^2/EJ$	1/3Xb/EJ
AG b	x/b	Fb-Fx	$Fx-Fx^2/b$	x^2/b^2		
FH b	0	$-3/2Fx-1/2qx^2$	0	0	0	0
HF b	0	$2Fb-5/2Fx+1/2qx^2$	0	0		
HI b	1-x/b	-Fb	-Fb+Fx	$1-2x/b+x^2/b^2$	$-1/2Fb^2/EJ$	1/3Xb/EJ
IH b	-x/b	Fb	-Fx	x^2/b^2		
HG b	-1	-Fb+Fx	Fb-Fx	1	$1/2Fb^2/EJ$	Xb/EJ
GH b	1	Fx	Fx	1		
HG	elongazione asta $N_{1HG}\varepsilon_{HG}L_{HG}$				$-Fb^2/EJ$	
A	molla nodo $-V_{1A}(V_{0A}+XV_{1A})/k_A$				$-1/2Fb^2/EJ$	1/4Xb/EJ
	totali				$-4/3Fb^2/EJ$	23/12Xb/EJ
	iperstatica $X=W_{GA}$				16/23Fb	

Sviluppi di calcolo iperstatica

$L^{XX}_{GA} = \int_o^b (1 - 2\,x/b + x^2/b^2)\ 1/EJ\ dx = [\ x - x^2/b + 1/3\ x^3/b^2\ ]_o^b\ 1/EJ$

$= (\ b - b + 1/3\ b\ )\ 1/EJ\ = 1/3\ b/EJ$

$L^{XX}_{AG} = \int_o^b (\ x^2/b^2\ )\ 1/EJ\ dx = [1/3\ x^3/b^2\ ]_o^b\ 1/EJ$

$= (1/3\ b\ )\ 1/EJ\ = 1/3\ b/EJ$

$L^{XX}_{HI} = \int_o^b (1 - 2\,x/b + x^2/b^2)\ 1/EJ\ dx = [\ x - x^2/b + 1/3\ x^3/b^2\ ]_o^b\ 1/EJ$

$= (\ b - b + 1/3\ b\ )\ 1/EJ\ = 1/3\ b/EJ$

$L^{XX}_{IH} = \int_o^b (\ x^2/b^2\ )\ 1/EJ\ dx = [1/3\ x^3/b^2\ ]_o^b\ 1/EJ$

$= (1/3\ b\ )\ 1/EJ\ = 1/3\ b/EJ$

$L^{XX}_{HG} = \int_o^b (1)\ 1/EJ\ dx = [\ x\ ]_o^b\ 1/EJ$

$= (\ b\ )\ 1/EJ\ =\ b/EJ$

$L^{XX}_{GH} = \int_o^b (1)\ 1/EJ\ dx = [\ x\ ]_o^b\ 1/EJ$

$= (\ b\ )\ 1/EJ\ =\ b/EJ$

$L^{Xo}_{GA} = \int_o^b (\ x/b - x^2/b^2\ )\ Fb\ 1/EJ\ dx = [1/2\ x^2/b - 1/3\ x^3/b^2\ ]_o^b\ Fb\ 1/EJ$

$= (1/2\ b - 1/3\ b\ )\ Fb\ 1/EJ\ = 1/6\ \ Fb^2/EJ$

$L^{Xo}_{AG} = \int_o^b (\ x/b - x^2/b^2\ )\ Fb\ 1/EJ\ dx = [1/2\ x^2/b - 1/3\ x^3/b^2\ ]_o^b\ Fb\ 1/EJ$

$= (1/2\ b - 1/3\ b\ )\ Fb\ 1/EJ\ = 1/6\ \ Fb^2/EJ$

$L^{Xo}_{HI} = \int_o^b (-1 + x/b\ )\ Fb\ 1/EJ\ dx = [-\ x + 1/2\ x^2/b\ ]_o^b\ Fb\ 1/EJ$

$= (-\ b + 1/2\ b\ )\ Fb\ 1/EJ\ = -1/2\ \ Fb^2/EJ$

$L^{Xo}_{IH} = \int_o^b (-\ x/b\ )\ Fb\ 1/EJ\ dx = [-1/2\ x^2/b\ ]_o^b\ Fb\ 1/EJ$

$= (-1/2\ b\ )\ Fb\ 1/EJ\ = -1/2\ \ Fb^2/EJ$

$L^{Xo}_{HG} = \int_o^b (1 - x/b\ )\ Fb\ 1/EJ\ dx - 1\ \ (-1)\ \ (-1)\ \ Fb^2/EJ = [\ x - 1/2\ x^2/b\ ]_o^b\ Fb\ 1/EJ\ \ - 1\ \ (-1)\ \ (-1)\ \ Fb^2/EJ$

$= (\ b - 1/2\ b\ )\ Fb\ 1/EJ\ \ - 1\ \ (-1)\ \ (-1)\ \ Fb^2/EJ = -1/2\ \ Fb^2/EJ$

$L^{Xo}_{GH} = \int_o^b (\ x/b\ )\ Fb\ 1/EJ\ dx - 1\ \ (-1)\ \ (-1)\ \ Fb^2/EJ = [1/2\ x^2/b\ ]_o^b\ Fb\ 1/EJ\ \ - 1\ \ (-1)\ \ (-1)\ \ Fb^2/EJ$

$= (1/2\ b\ )\ Fb\ 1/EJ\ \ - 1\ \ (-1)\ \ (-1)\ \ Fb^2/EJ = -1/2\ \ Fb^2/EJ$

PROCEDIMENTO E RISULTATI 236903 ESΣ05.xxxx.118

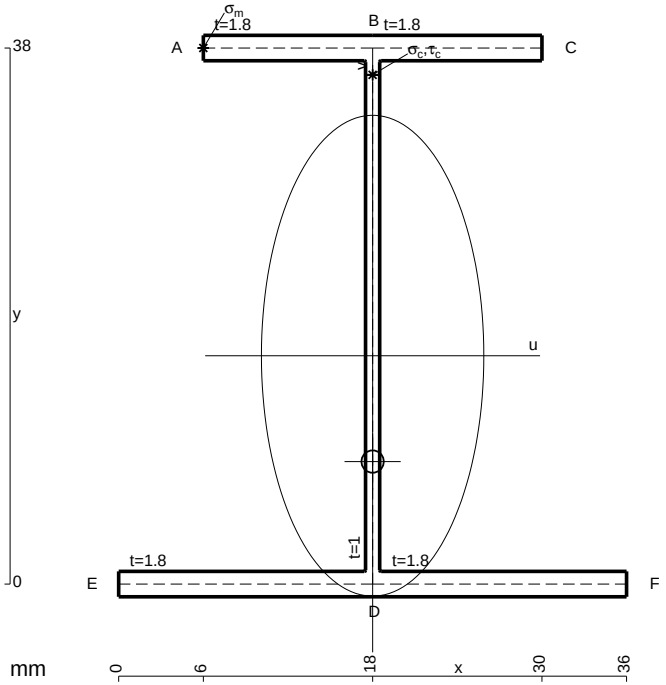

A = 146. mm^2
J_u = 42407. mm^4
J_v = 9072. mm^4
J_t = 129.3 mm^4
y_o = -7.503 mm
y_g = 16.19 mm
N = -390. N
T_y = -975. N
M_x = -444600. Nmm
x_m = 6. mm
y_m = 38. mm
u_m = -12. mm
v_m = 21.81 mm
$\sigma_m = N/A - Mv/J_u$ = 226. N/mm^2
x_c = 18. mm
y_c = 38. mm
v_c = 21.81 mm
$\sigma_c = N/A - Mv/J_u$ = 226. N/mm^2
$\tau_c = TS^*/tJ_u$ = 21.66 N/mm^2
$\tau_g = TS^*/tJ_u$ = 21.66 N/mm^2
t_c = 390. mm
$\sigma_o = \sqrt{\sigma^2 + 3\tau^2}$ = 229.1 N/mm^2

@ Adolfo Zavelani Rossi, Politecnico di Milano, vers.27.03.13 01.12.25

ESΣ05.xxxx.118

@ Adolfo Zavelani Rossi, Politecnico di Milano, vers.27.03.13 01.12.25

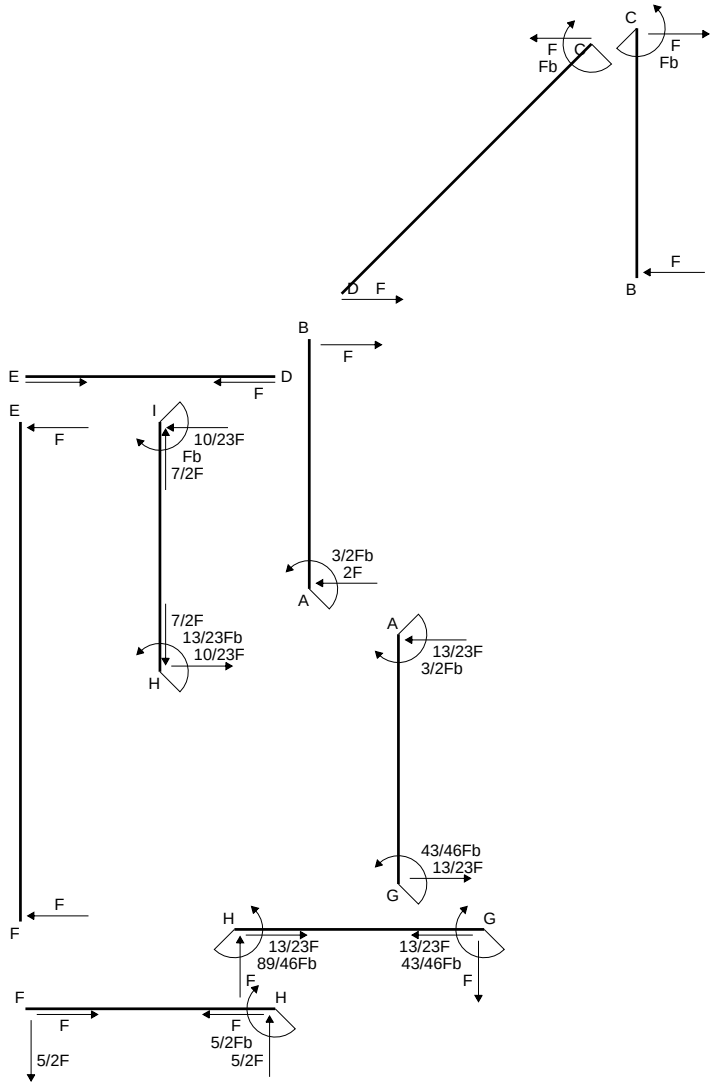
C
F
Fb
C
F
Fb
F
D
F
B
B
F
E
D
F
E
F
I
10/23F
Fb
7/2F
3/2Fb
2F
A
7/2F
13/23Fb
10/23F
H
A
13/23F
3/2Fb
43/46Fb
13/23F
G
F
F
H
G
13/23F
89/46Fb
13/23F
43/46Fb
F
F
H
F
F
5/2Fb
5/2F
F
5/2F

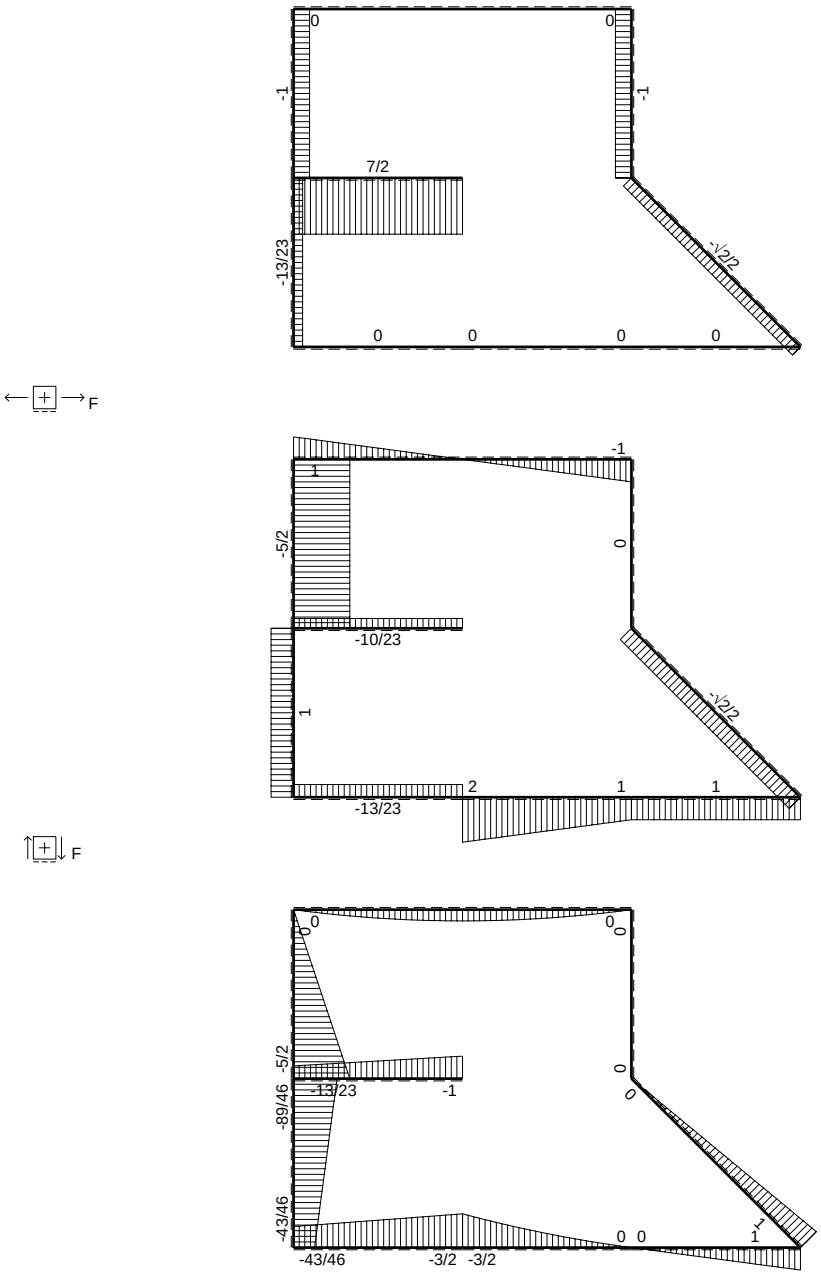
F
0
0
-1
-1
7/2
-13/23
-√2/2
0
0
0
0
F
-1
1
-5/2
0
-10/23
1
-√2/2
2
1
1
-13/23
F
0
0
0
0
-5/2
-89/46
-43/46
-13/23
-1
0
0
1
1
-43/46
-3/2
-3/2
Fb

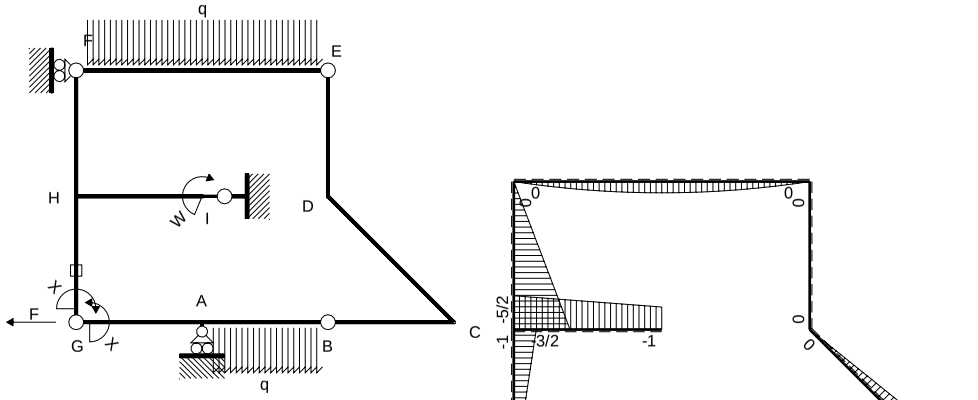

M_0 flessione da carichi assegnati

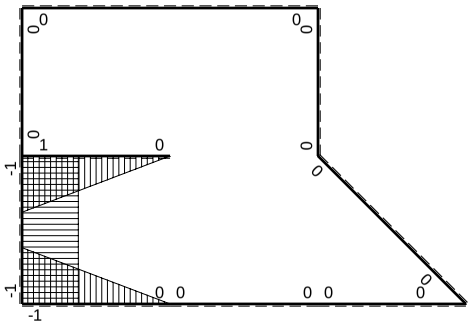

M_x flessione da iperstatica X=1

Quadro contributi PLV per iperstatica $X=W_{GA}$

→	$M_x(x)$	$M_0(x)$	M_xM_0	M_xM_x	$\int M_xM_0/EJdx$	$\int XM_xM_x/EJdx$
AB b	0	$-3/2Fb+2Fx-1/2qx^2$	0	0	0	0
BA b	0	$Fx+1/2qx^2$	0	0		
BC b	0	Fx	0	0	0	0
CB b	0	$-Fb+Fx$	0	0		
CD $\sqrt{2}b$	0	$Fb-\sqrt{2}/2Fx$	0	0	0	0
DE b	0	0	0	0	0	0
ED b	0	0	0	0		
EF 2b	0	$-Fx+1/2qx^2$	0	0	0	0
FE 2b	0	$Fx-1/2qx^2$	0	0		
GA b	$-1+x/b$	$-3/2Fx$	$3/2Fx-3/2Fx^2/b$	$1-2x/b+x^2/b^2$	$1/4Fb^2/EJ$	$1/3Xb/EJ$
AG b	x/b	$3/2Fb-3/2Fx$	$3/2Fx-3/2Fx^2/b$	x^2/b^2		
FH b	0	$-5/2Fx$	0	0	0	0
HF b	0	$5/2Fb-5/2Fx$	0	0		
HI b	$1-x/b$	$-3/2Fb+1/2Fx$	$-3/2Fb+2Fx-1/2Fx^2/b$	$1-2x/b+x^2/b^2$	$-2/3Fb^2/EJ$	$1/3Xb/EJ$
IH b	$-x/b$	$Fb+1/2Fx$	$-Fx-1/2Fx^2/b$	x^2/b^2		
HG b	-1	$-Fb+Fx$	$Fb-Fx$	1	$1/2Fb^2/EJ$	Xb/EJ
GH b	1	Fx	Fx	1		
HG	elongazione asta $N_{1HG}\varepsilon_{HG}L_{HG}$				$-Fb^2/EJ$	
A	molla nodo $-V_{1A}(V_{0A}+XV_{1A})/k_A$				$-7/8Fb^2/EJ$	$1/4Xb/EJ$
	totali				$-43/24Fb^2/EJ$	$23/12Xb/EJ$
	iperstatica $X=W_{GA}$				43/46Fb	

Sviluppi di calcolo iperstatica

$L^{XX}_{GA} = \int_o^b (1 - 2\,x/b + x^2/b^2)\ 1/EJ\ dx = [\ x - x^2/b + 1/3\ x^3/b^2\ ]_o^b\ 1/EJ$

$= (\ b - b + 1/3\ b\ )\ 1/EJ\ = 1/3\ b/EJ$

$L^{XX}_{AG} = \int_o^b (\ x^2/b^2\ )\ 1/EJ\ dx = [1/3\ x^3/b^2\ ]_o^b\ 1/EJ$

$= (1/3\ b\ )\ 1/EJ\ = 1/3\ b/EJ$

$L^{XX}_{HI} = \int_o^b (1 - 2\,x/b + x^2/b^2)\ 1/EJ\ dx = [\ x - x^2/b + 1/3\ x^3/b^2\ ]_o^b\ 1/EJ$

$= (\ b - b + 1/3\ b\ )\ 1/EJ\ = 1/3\ b/EJ$

$L^{XX}_{IH} = \int_o^b (\ x^2/b^2\ )\ 1/EJ\ dx = [1/3\ x^3/b^2\ ]_o^b\ 1/EJ$

$= (1/3\ b\ )\ 1/EJ\ = 1/3\ b/EJ$

$L^{XX}_{HG} = \int_o^b (1\ )\ 1/EJ\ dx = [\ x\ ]_o^b\ 1/EJ$

$= (\ b\ )\ 1/EJ\ =\ b/EJ$

$L^{XX}_{GH} = \int_o^b (1\ )\ 1/EJ\ dx = [\ x\ ]_o^b\ 1/EJ$

$= (\ b\ )\ 1/EJ\ =\ b/EJ$

$L^{Xo}_{GA} = \int_o^b (3/2\ x/b - 3/2\ x^2/b^2\ )\ Fb\ 1/EJ\ dx = [3/4\ x^2/b - 1/2\ x^3/b^2\ ]_o^b\ Fb\ 1/EJ$

$= (3/4\ b - 1/2\ b\ )\ Fb\ 1/EJ\ = 1/4\ \ Fb^2/EJ$

$L^{Xo}_{AG} = \int_o^b (3/2\ x/b - 3/2\ x^2/b^2\ )\ Fb\ 1/EJ\ dx = [3/4\ x^2/b - 1/2\ x^3/b^2\ ]_o^b\ Fb\ 1/EJ$

$= (3/4\ b - 1/2\ b\ )\ Fb\ 1/EJ\ = 1/4\ \ Fb^2/EJ$

$L^{Xo}_{HI} = \int_o^b (-3/2 + 2\,x/b - 1/2\ x^2/b^2\ )\ Fb\ 1/EJ\ dx = [-3/2\ x + x^2/b - 1/6\ x^3/b^2\ ]_o^b\ Fb\ 1/EJ$

$= (-3/2\ b + b - 1/6\ b\ )\ Fb\ 1/EJ\ = -2/3\ \ Fb^2/EJ$

$L^{Xo}_{IH} = \int_o^b (-\ x/b - 1/2\ x^2/b^2\ )\ Fb\ 1/EJ\ dx = [-1/2\ x^2/b - 1/6\ x^3/b^2\ ]_o^b\ Fb\ 1/EJ$

$= (-1/2\ b - 1/6\ b\ )\ Fb\ 1/EJ\ = -2/3\ \ Fb^2/EJ$

$L^{Xo}_{HG} = \int_o^b (1 - x/b\ )\ Fb\ 1/EJ\ dx - 1\ \ (-1)\ \ (-1)\ \ Fb^2/EJ = [\ x - 1/2\ x^2/b\ ]_o^b\ Fb\ 1/EJ\ \ - 1\ \ (-1)\ \ (-1)\ \ Fb^2/EJ$

$= (\ b - 1/2\ b\ )\ Fb\ 1/EJ\ \ - 1\ \ (-1)\ \ (-1)\ \ Fb^2/EJ = -1/2\ \ Fb^2/EJ$

$L^{Xo}_{GH} = \int_o^b (\ x/b\ )\ Fb\ 1/EJ\ dx - 1\ \ (-1)\ \ (-1)\ \ Fb^2/EJ = [1/2\ x^2/b\ ]_o^b\ Fb\ 1/EJ\ \ - 1\ \ (-1)\ \ (-1)\ \ Fb^2/EJ$

$= (1/2\ b\ )\ Fb\ 1/EJ\ \ - 1\ \ (-1)\ \ (-1)\ \ Fb^2/EJ = -1/2\ \ Fb^2/EJ$

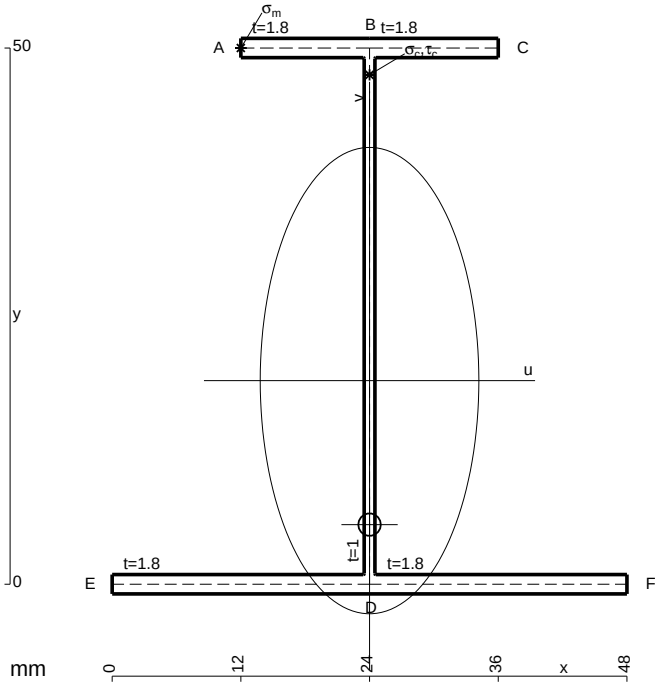

A = 179.6 mm^2
J_u = 84922. mm^4
J_v = 18662. mm^4
J_t = 156.6 mm^4
y_o = -13.43 mm
y_g = 18.99 mm
N = -320. N
T_y = -800. N
M_x = -648000. Nmm
x_m = 12. mm
y_m = 50. mm
u_m = -12. mm
v_m = 31.01 mm
$\sigma_m = N/A - Mv/J_u$ = 234.9 N/mm^2
x_c = 24. mm
y_c = 50. mm
v_c = 31.01 mm
$\sigma_c = N/A - Mv/J_u$ = 234.9 N/mm^2
$\tau_c = TS^*/tJ_u$ = 12.62 N/mm^2
$\tau_g = TS^*/tJ_u$ = 12.62 N/mm^2
t_c = 320. mm
$\sigma_o = \sqrt{\sigma^2 + 3\tau^2}$ = 235.9 N/mm^2

ESΣ05.xxxx.119

@ Adolfo Zavelani Rossi, Politecnico di Milano, vers.27.03.13 01.12.25

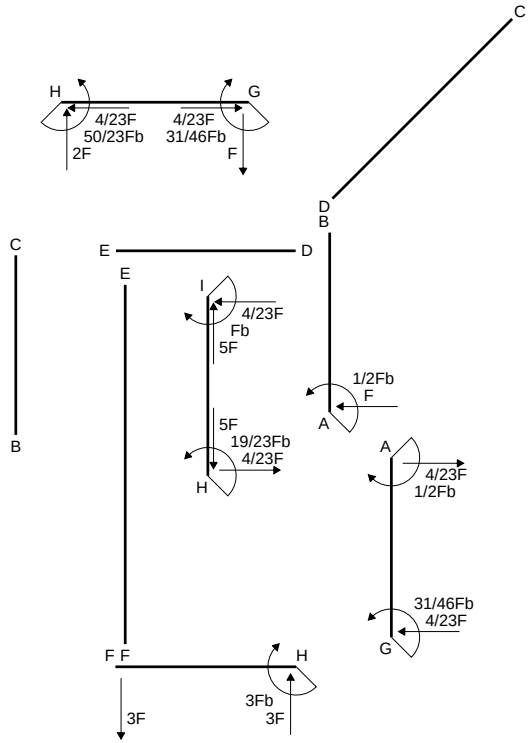
H
G
4/23F
50/23Fb
2F
4/23F
31/46Fb
F
C
D
B
E
D
C
E
I
4/23F
Fb
5F
1/2Fb
F
A
5F
19/23Fb
4/23F
H
A
4/23F
1/2Fb
31/46Fb
4/23F
G
B
F F
H
3Fb
3F
3F

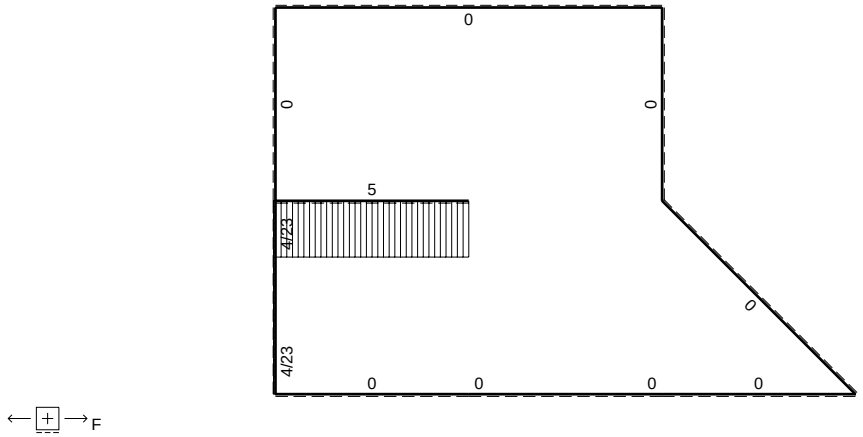
F
0
0
0
5
4/23
0
4/23
0
0
0
0

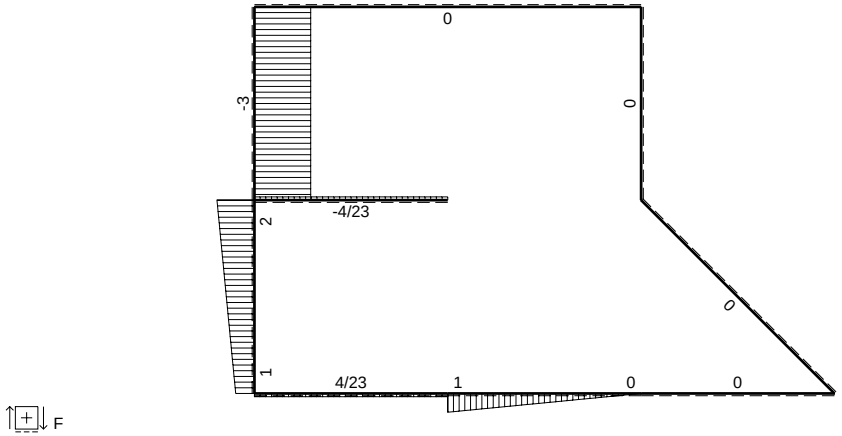
F
0
-3
0
-4/23
2
0
1
4/23
1
0
0

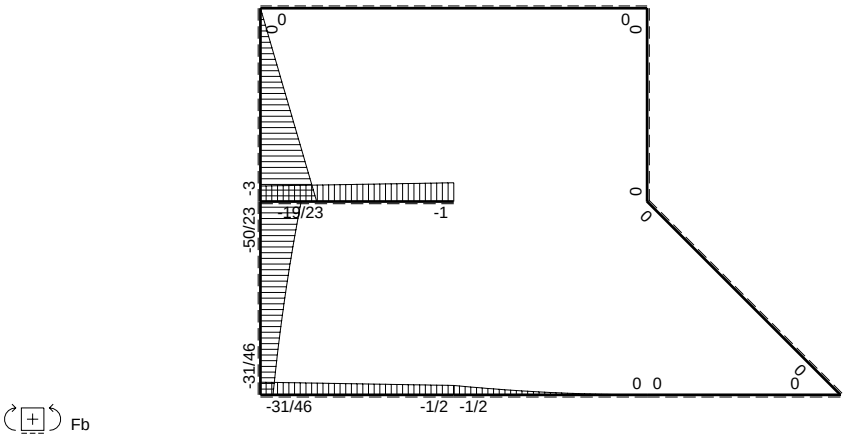
Fb
0
0
0
-3
0
-19/23
-1
-50/23
0
0
-31/46
0 0
0
-31/46
-1/2 -1/2

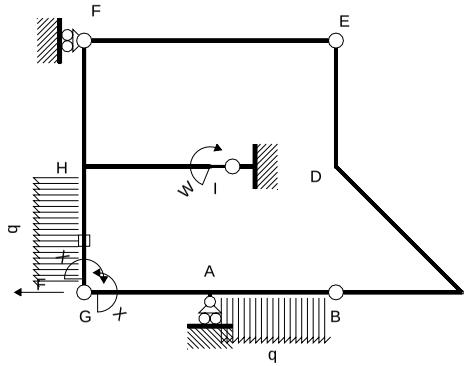

Schema di calcolo iperstatico

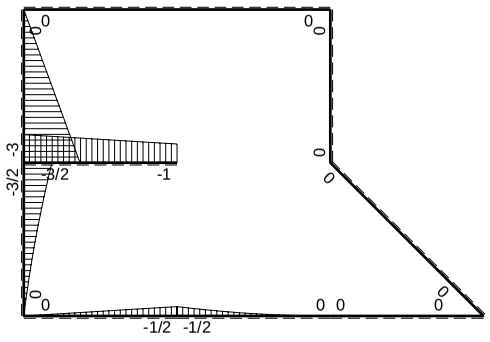

M_0 flessione da carichi assegnati

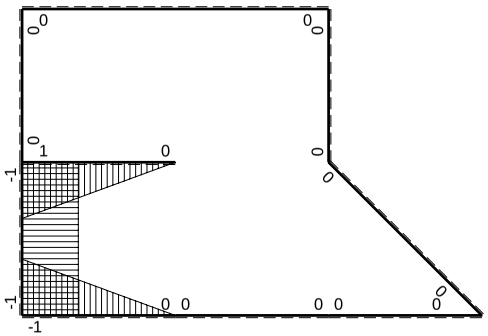

M_x flessione da iperstatica X=1

Quadro contributi PLV per iperstatica $X=W_{GA}$

→	$M_x(x)$	$M_0(x)$	M_xM_0	M_xM_x	$\int M_xM_0/EJdx$	$\int XM_xM_x/EJdx$
AB b	0	$-1/2Fb+Fx-1/2qx^2$	0	0	0	0
BA b	0	$1/2qx^2$	0	0		
BC b	0	0	0	0	0	0
CB b	0	0	0	0		
CD √2b	0	0	0	0	0	0
DE b	0	0	0	0	0	0
ED b	0	0	0	0		
EF 2b	0	0	0	0	0	0
FE 2b	0	0	0	0		
GA b	$-1+x/b$	$-1/2Fx$	$1/2Fx-1/2Fx^2/b$	$1-2x/b+x^2/b^2$	$1/12Fb^2/EJ$	$1/3Xb/EJ$
AG b	x/b	$1/2Fb-1/2Fx$	$1/2Fx-1/2Fx^2/b$	x^2/b^2		
FH b	0	$-3Fx$	0	0	0	0
HF b	0	$3Fb-3Fx$	0	0		
HI b	$1-x/b$	$-3/2Fb+1/2Fx$	$-3/2Fb+2Fx-1/2Fx^2/b$	$1-2x/b+x^2/b^2$	$-2/3Fb^2/EJ$	$1/3Xb/EJ$
IH b	$-x/b$	$Fb+1/2Fx$	$-Fx-1/2Fx^2/b$	x^2/b^2		
HG b	-1	$-3/2Fb+2Fx-1/2qx^2$	$3/2Fb-2Fx+1/2Fx^2/b$	1	$2/3Fb^2/EJ$	Xb/EJ
GH b	1	$Fx+1/2qx^2$	$Fx+1/2Fx^2/b$	1		
HG	elongazione asta $N_{1HG}\varepsilon_{HG}L_{HG}$				$-Fb^2/EJ$	
A	molla nodo $-V_{1A}(V_{0A}+XV_{1A})/k_A$				$-3/8Fb^2/EJ$	$1/4Xb/EJ$
	totali				$-31/24Fb^2/EJ$	$23/12Xb/EJ$
	iperstatica $X=W_{GA}$				31/46Fb	

Sviluppi di calcolo iperstatica

$L^{XX}_{GA} = \int_o^b (1 - 2\,x/b + x^2/b^2)\ 1/EJ\ dx = [\ x - x^2/b + 1/3\ x^3/b^2\ ]_o^b\ 1/EJ$

$= (\ b - b + 1/3\ b\ )\ 1/EJ\ = 1/3\ b/EJ$

$L^{XX}_{AG} = \int_o^b (\ x^2/b^2\ )\ 1/EJ\ dx = [1/3\ x^3/b^2\ ]_o^b\ 1/EJ$

$= (1/3\ b\ )\ 1/EJ\ = 1/3\ b/EJ$

$L^{XX}_{HI} = \int_o^b (1 - 2\,x/b + x^2/b^2)\ 1/EJ\ dx = [\ x - x^2/b + 1/3\ x^3/b^2\ ]_o^b\ 1/EJ$

$= (\ b - b + 1/3\ b\ )\ 1/EJ\ = 1/3\ b/EJ$

$L^{XX}_{IH} = \int_o^b (\ x^2/b^2\ )\ 1/EJ\ dx = [1/3\ x^3/b^2\ ]_o^b\ 1/EJ$

$= (1/3\ b\ )\ 1/EJ\ = 1/3\ b/EJ$

$L^{XX}_{HG} = \int_o^b (1\ )\ 1/EJ\ dx = [\ x\ ]_o^b\ 1/EJ$

$= (\ b\ )\ 1/EJ\ =\ b/EJ$

$L^{XX}_{GH} = \int_o^b (1\ )\ 1/EJ\ dx = [\ x\ ]_o^b\ 1/EJ$

$= (\ b\ )\ 1/EJ\ =\ b/EJ$

$L^{Xo}_{GA} = \int_o^b (1/2\ x/b - 1/2\ x^2/b^2\ )\ Fb\ 1/EJ\ dx = [1/4\ x^2/b - 1/6\ x^3/b^2\ ]_o^b\ Fb\ 1/EJ$

$= (1/4\ b - 1/6\ b\ )\ Fb\ 1/EJ\ = 1/12\ \ Fb^2/EJ$

$L^{Xo}_{AG} = \int_o^b (1/2\ x/b - 1/2\ x^2/b^2\ )\ Fb\ 1/EJ\ dx = [1/4\ x^2/b - 1/6\ x^3/b^2\ ]_o^b\ Fb\ 1/EJ$

$= (1/4\ b - 1/6\ b\ )\ Fb\ 1/EJ\ = 1/12\ \ Fb^2/EJ$

$L^{Xo}_{HI} = \int_o^b (-3/2 + 2\ x/b - 1/2\ x^2/b^2\ )\ Fb\ 1/EJ\ dx = [-3/2\ x + x^2/b - 1/6\ x^3/b^2\ ]_o^b\ Fb\ 1/EJ$

$= (-3/2\ b + b - 1/6\ b\ )\ Fb\ 1/EJ\ = -2/3\ \ Fb^2/EJ$

$L^{Xo}_{IH} = \int_o^b (-\ x/b - 1/2\ x^2/b^2\ )\ Fb\ 1/EJ\ dx = [-1/2\ x^2/b - 1/6\ x^3/b^2\ ]_o^b\ Fb\ 1/EJ$

$= (-1/2\ b - 1/6\ b\ )\ Fb\ 1/EJ\ = -2/3\ \ Fb^2/EJ$

$L^{Xo}_{HG} = \int_o^b (3/2 - 2\ x/b + 1/2\ x^2/b^2\ )\ Fb\ 1/EJ\ dx - 1\ \ (-1)\ \ (-1)\ \ Fb^2/EJ$

$= [3/2\ x - x^2/b + 1/6\ x^3/b^2\ ]_o^b\ Fb\ 1/EJ\ - 1\ \ (-1)\ \ (-1)\ \ Fb^2/EJ$

$= (3/2\ b - b + 1/6\ b\ )\ Fb\ 1/EJ\ - 1\ \ (-1)\ \ (-1)\ \ Fb^2/EJ = -1/3\ \ Fb^2/EJ$

$L^{Xo}_{GH} = \int_o^b (\ x/b + 1/2\ x^2/b^2\ )\ Fb\ 1/EJ\ dx - 1\ \ (-1)\ \ (-1)\ \ Fb^2/EJ$

$= [1/2\ x^2/b + 1/6\ x^3/b^2\ ]_o^b\ Fb\ 1/EJ\ - 1\ \ (-1)\ \ (-1)\ \ Fb^2/EJ$

$= (1/2\ b + 1/6\ b\ )\ Fb\ 1/EJ\ - 1\ \ (-1)\ \ (-1)\ \ Fb^2/EJ = -1/3\ \ Fb^2/EJ$

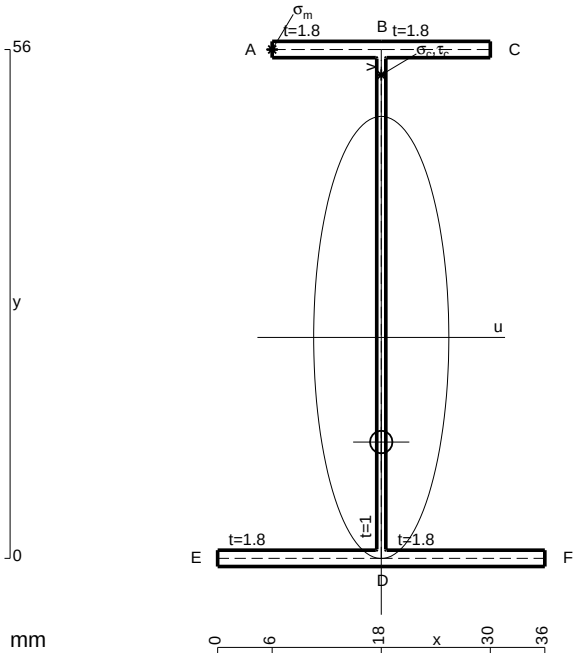

A = 164. mm^2
J_u = 97076. mm^4
J_v = 9072. mm^4
J_t = 135.3 mm^4
y_o = -11.51 mm
y_g = 24.31 mm
T_y = -1260. N
M_x = -604800. Nmm
x_m = 6. mm
y_m = 56. mm
u_m = -12. mm
v_m = 31.69 mm
$\sigma_m = -Mv/J_u$ = 197.4 N/mm^2
x_c = 18. mm
y_c = 56. mm
v_c = 31.69 mm
$\sigma_c = -Mv/J_u$ = 197.4 N/mm^2
$\tau_c = TS^*/tJ_u$ = 17.77 N/mm^2
$\tau_g = TS^*/tJ_u$ = 17.77 N/mm^2
t_c = 420. mm
$\sigma_o = \sqrt{\sigma^2 + 3\tau^2}$ = 199.8 N/mm^2

ESΣ05.xxxx.120

@ Adolfo Zavelani Rossi, Politecnico di Milano, vers.27.03.13 01.12.25

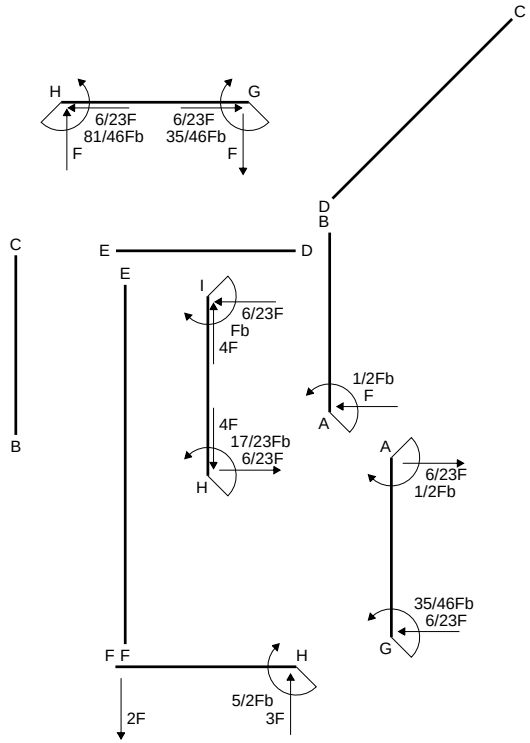
H
G
6/23F
81/46Fb
F
6/23F
35/46Fb
F
C
D
B
E
D
C
B
E
I
6/23F
Fb
4F
1/2Fb
F
A
4F
17/23Fb
6/23F
H
A
6/23F
1/2Fb
35/46Fb
6/23F
G
F F
H
5/2Fb
3F
2F

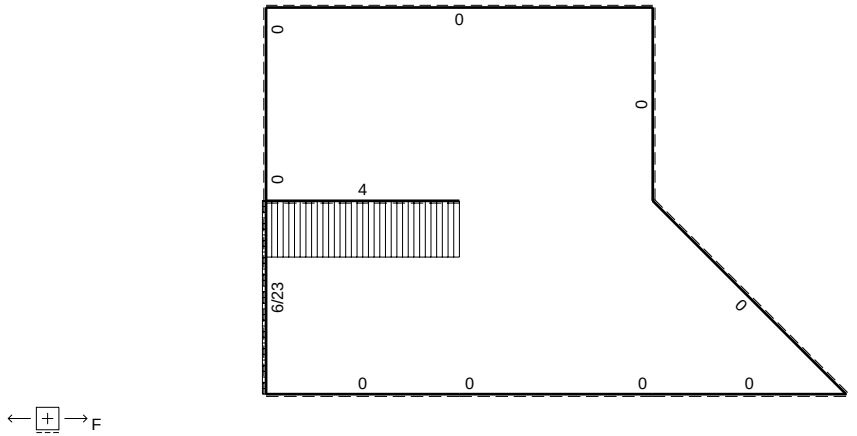
F
0
0
0
0
4
6/23
0
0
0
0
0

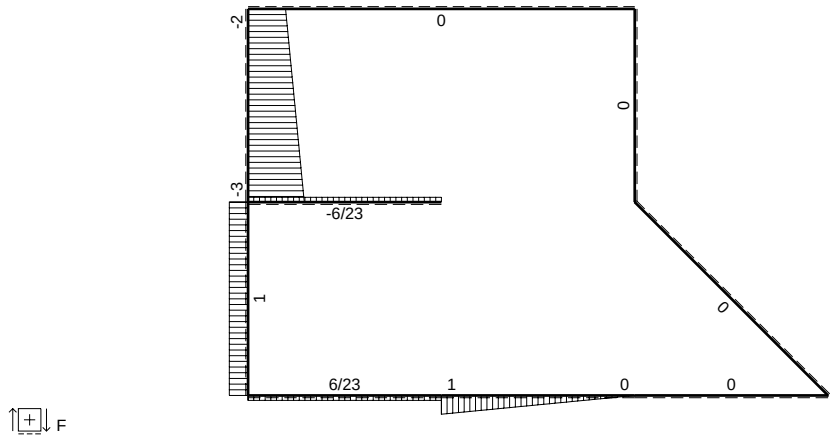
F
-2
0
0
-3
-6/23
1
0
6/23
1
0
0

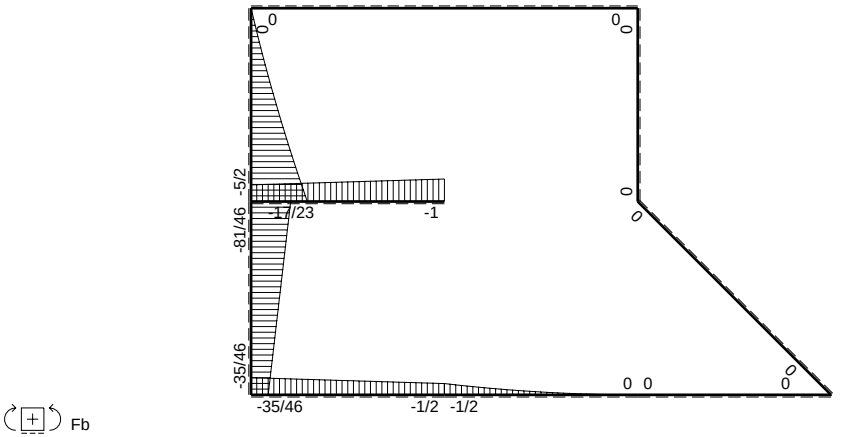
Fb
0
0
0
0
-5/2
-81/46
-17/23
-1
0
0
-35/46
0 0
0
-35/46
-1/2 -1/2

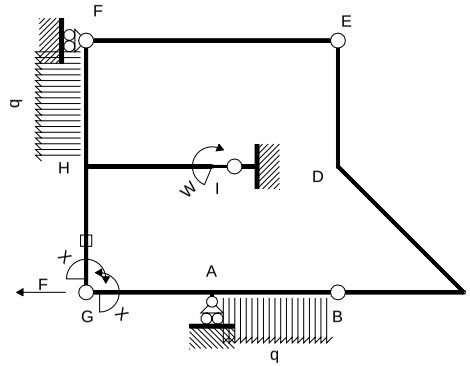

Schema di calcolo iperstatico

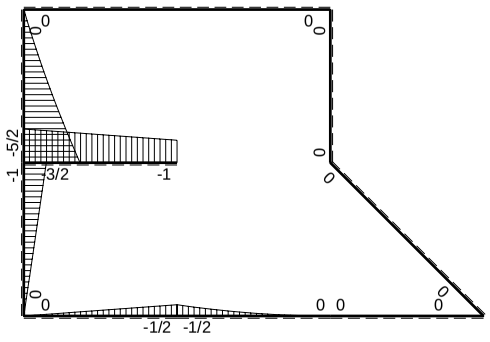

M_0 flessione da carichi assegnati

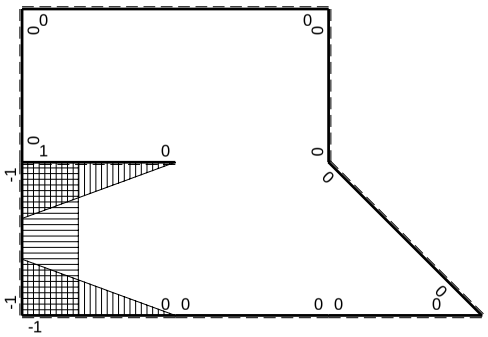

M_x flessione da iperstatica X=1

Quadro contributi PLV per iperstatica $X=W_{GA}$

→	$M_x(x)$	$M_0(x)$	M_xM_0	M_xM_x	$\int M_xM_0/EJdx$	$\int XM_xM_x/EJdx$
AB b	0	$-1/2Fb+Fx-1/2qx^2$	0	0	0	0
BA b	0	$1/2qx^2$	0	0		
BC b	0	0	0	0	0	0
CB b	0	0	0	0		
CD $\sqrt{2}$b	0	0	0	0	0	0
DE b	0	0	0	0	0	0
ED b	0	0	0	0		
EF 2b	0	0	0	0	0	0
FE 2b	0	0	0	0		
GA b	$-1+x/b$	$-1/2Fx$	$1/2Fx-1/2Fx^2/b$	$1-2x/b+x^2/b^2$	$1/12Fb^2/EJ$	1/3Xb/EJ
AG b	x/b	$1/2Fb-1/2Fx$	$1/2Fx-1/2Fx^2/b$	x^2/b^2		
FH b	0	$-2Fx-1/2qx^2$	0	0	0	0
HF b	0	$5/2Fb-3Fx+1/2qx^2$	0	0		
HI b	$1-x/b$	$-3/2Fb+1/2Fx$	$-3/2Fb+2Fx-1/2Fx^2/b$	$1-2x/b+x^2/b^2$	$-2/3Fb^2/EJ$	1/3Xb/EJ
IH b	$-x/b$	$Fb+1/2Fx$	$-Fx-1/2Fx^2/b$	x^2/b^2		
HG b	-1	$-Fb+Fx$	$Fb-Fx$	1	$1/2Fb^2/EJ$	Xb/EJ
GH b	1	Fx	Fx	1		
HG	elongazione asta $N_{1HG}\varepsilon_{HG}L_{HG}$				$-Fb^2/EJ$	
A	molla nodo $-V_{1A}(V_{0A}+XV_{1A})/k_A$				$-3/8Fb^2/EJ$	1/4Xb/EJ
	totali				$-35/24Fb^2/EJ$	23/12Xb/EJ
	iperstatica $X=W_{GA}$				35/46Fb	

Sviluppi di calcolo iperstatica

$L^{XX}_{GA} = \int_o^b (1 - 2\,x/b + x^2/b^2)\ 1/EJ\ dx = [\,x - x^2/b + 1/3\,x^3/b^2\,]_o^b\ 1/EJ$

$= (\,b - b + 1/3\,b\,)\ 1/EJ = 1/3\ b/EJ$

$L^{XX}_{AG} = \int_o^b (\,x^2/b^2\,)\ 1/EJ\ dx = [1/3\,x^3/b^2\,]_o^b\ 1/EJ$

$= (1/3\,b)\ 1/EJ = 1/3\ b/EJ$

$L^{XX}_{HI} = \int_o^b (1 - 2\,x/b + x^2/b^2)\ 1/EJ\ dx = [\,x - x^2/b + 1/3\,x^3/b^2\,]_o^b\ 1/EJ$

$= (\,b - b + 1/3\,b\,)\ 1/EJ = 1/3\ b/EJ$

$L^{XX}_{IH} = \int_o^b (\,x^2/b^2\,)\ 1/EJ\ dx = [1/3\,x^3/b^2\,]_o^b\ 1/EJ$

$= (1/3\,b)\ 1/EJ = 1/3\ b/EJ$

$L^{XX}_{HG} = \int_o^b (1)\ 1/EJ\ dx = [\,x\,]_o^b\ 1/EJ$

$= (\,b\,)\ 1/EJ = b/EJ$

$L^{XX}_{GH} = \int_o^b (1)\ 1/EJ\ dx = [\,x\,]_o^b\ 1/EJ$

$= (\,b\,)\ 1/EJ = b/EJ$

$L^{Xo}_{GA} = \int_o^b (1/2\,x/b - 1/2\,x^2/b^2)\ Fb\ 1/EJ\ dx = [1/4\,x^2/b - 1/6\,x^3/b^2\,]_o^b\ Fb\ 1/EJ$

$= (1/4\,b - 1/6\,b)\ Fb\ 1/EJ = 1/12\ Fb^2/EJ$

$L^{Xo}_{AG} = \int_o^b (1/2\,x/b - 1/2\,x^2/b^2)\ Fb\ 1/EJ\ dx = [1/4\,x^2/b - 1/6\,x^3/b^2\,]_o^b\ Fb\ 1/EJ$

$= (1/4\,b - 1/6\,b)\ Fb\ 1/EJ = 1/12\ Fb^2/EJ$

$L^{Xo}_{HI} = \int_o^b (-3/2 + 2\,x/b - 1/2\,x^2/b^2)\ Fb\ 1/EJ\ dx = [-3/2\,x + x^2/b - 1/6\,x^3/b^2\,]_o^b\ Fb\ 1/EJ$

$= (-3/2\,b + b - 1/6\,b)\ Fb\ 1/EJ = -2/3\ Fb^2/EJ$

$L^{Xo}_{IH} = \int_o^b (-\,x/b - 1/2\,x^2/b^2)\ Fb\ 1/EJ\ dx = [-1/2\,x^2/b - 1/6\,x^3/b^2\,]_o^b\ Fb\ 1/EJ$

$= (-1/2\,b - 1/6\,b)\ Fb\ 1/EJ = -2/3\ Fb^2/EJ$

$L^{Xo}_{HG} = \int_o^b (1 - x/b)\ Fb\ 1/EJ\ dx - 1\ \ (-1)\ \ (-1)\ \ Fb^2/EJ = [\,x - 1/2\,x^2/b\,]_o^b\ Fb\ 1/EJ\ \ - 1\ \ (-1)\ \ (-1)\ \ Fb^2/EJ$

$= (\,b - 1/2\,b\,)\ Fb\ 1/EJ\ \ - 1\ \ (-1)\ \ (-1)\ \ Fb^2/EJ = -1/2\ \ Fb^2/EJ$

$L^{Xo}_{GH} = \int_o^b (\,x/b\,)\ Fb\ 1/EJ\ dx - 1\ \ (-1)\ \ (-1)\ \ Fb^2/EJ = [1/2\,x^2/b\,]_o^b\ Fb\ 1/EJ\ \ - 1\ \ (-1)\ \ (-1)\ \ Fb^2/EJ$

$= (1/2\,b)\ Fb\ 1/EJ\ \ - 1\ \ (-1)\ \ (-1)\ \ Fb^2/EJ = -1/2\ \ Fb^2/EJ$

PROCEDIMENTO E RISULTATI 238003 ESΣ05.xxxx.121

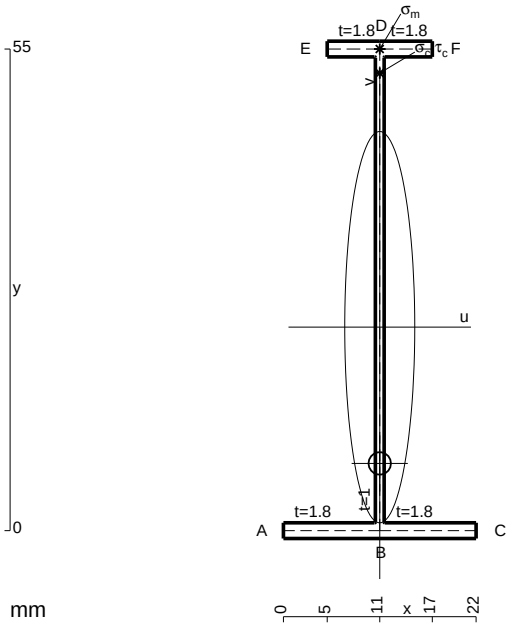

A = 116.2 mm^2
J_u = 58038. mm^4
J_v = 1856. mm^4
J_t = 84.43 mm^4
y_o = -15.56 mm
y_g = 23.24 mm
T_y = -900. N
M_x = -382500. Nmm
x_m = 11. mm
y_m = 55. mm
v_m = 31.76 mm
$\sigma_m = -Mv/J_u$ = 209.3 N/mm^2
y_c = 2. mm
u_c = -11. mm
v_c = -21.24 mm
$\sigma_c = -Mv/J_u$ = 209.3 N/mm^2
$\tau_c = TS^*/tJ_u$ = 10.64 N/mm^2
$\tau_g = TS^*/tJ_u$ = 10.64 N/mm^2
t_c = 300. mm
$\sigma_o = \sqrt{\sigma^2 + 3\tau^2}$ = 210.1 N/mm^2

ESΣ05.xxxx.121

@ Adolfo Zavelani Rossi, Politecnico di Milano, vers.27.03.13 01.12.25

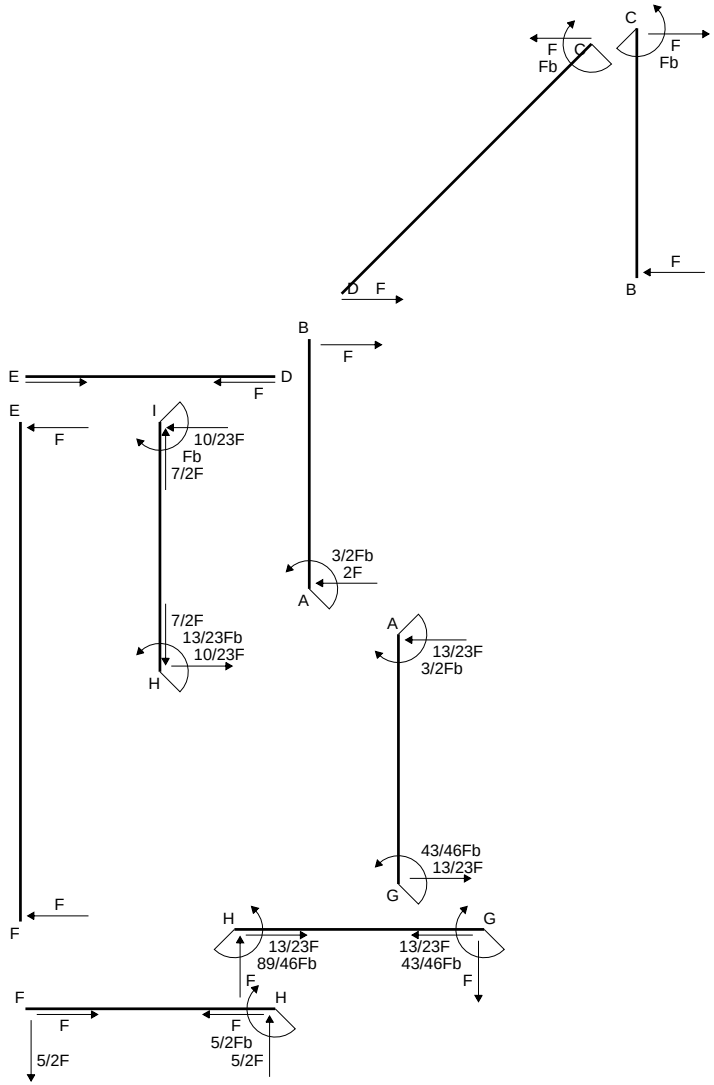
C
F
Fb
C
F
Fb
F
D
F
B
B
F
E
D
F
E
F
I
10/23F
Fb
7/2F
3/2Fb
2F
A
7/2F
13/23Fb
10/23F
H
A
13/23F
3/2Fb
43/46Fb
13/23F
G
F
F
H
G
13/23F
89/46Fb
13/23F
43/46Fb
F
F
F
H
F
F
5/2Fb
5/2F
5/2F

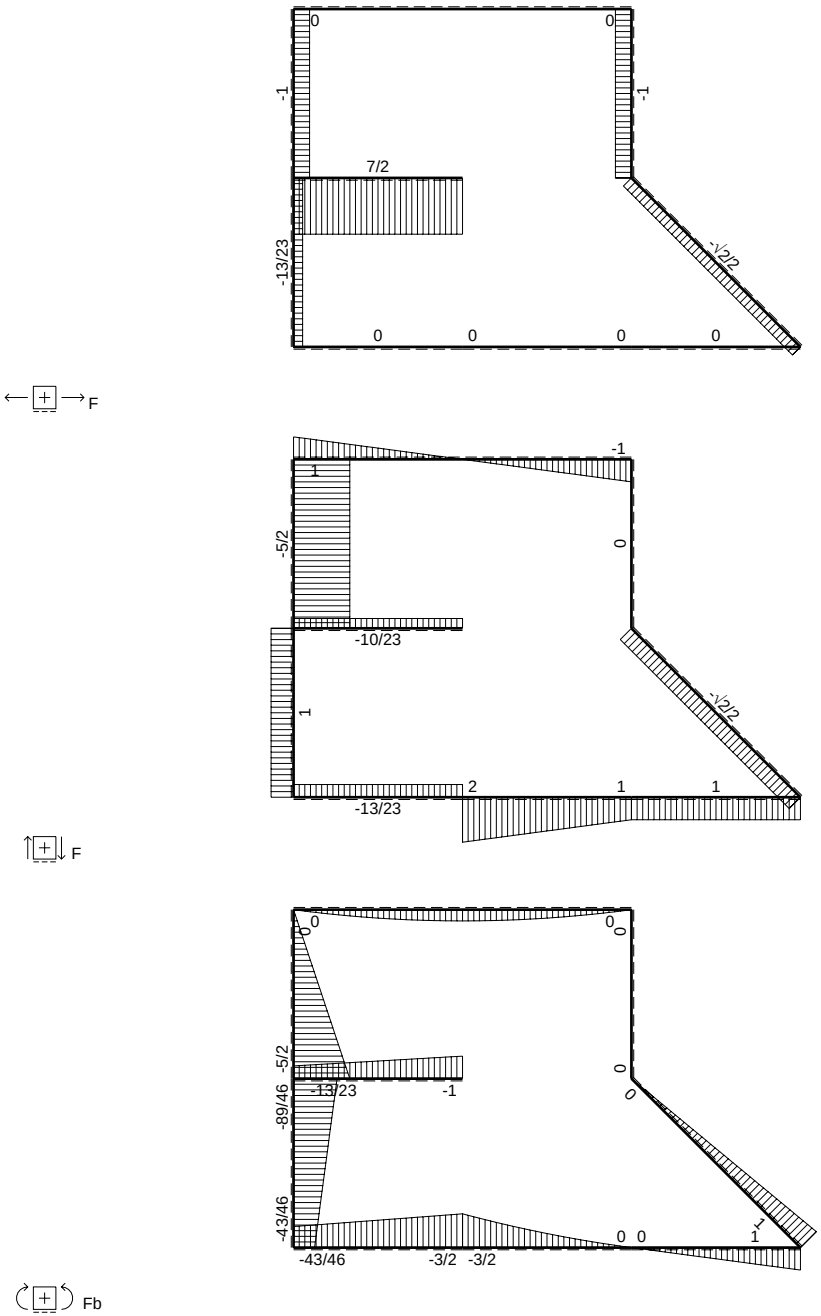
F
0
0
-1
-1
7/2
-13/23
-√2/2
0
0
0
0
F
-1
1
-5/2
0
-10/23
1
-√2/2
2
1
1
-13/23
F
0
0
0
0
-5/2
-89/46
-43/46
-13/23
-1
0
0
0 0
1
1
-43/46
-3/2 -3/2
Fb

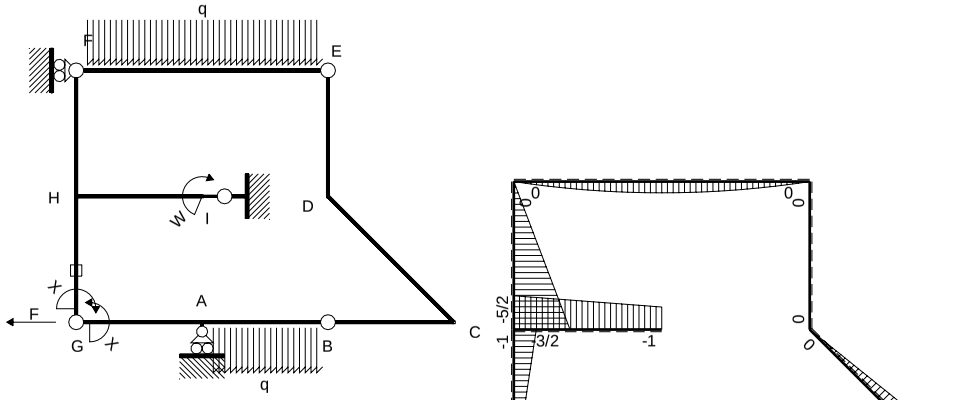

M_0 flessione da carichi assegnati

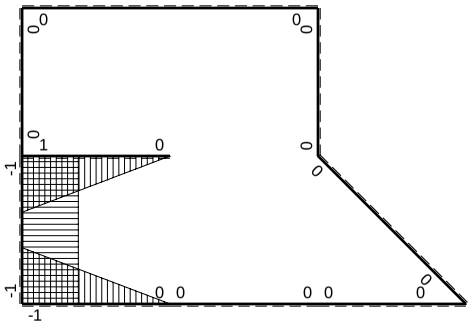

M_x flessione da iperstatica X=1

Quadro contributi PLV per iperstatica $X=W_{GA}$

→	$M_x(x)$	$M_0(x)$	M_xM_0	M_xM_x	$\int M_xM_0/EJdx$	$\int XM_xM_x/EJdx$
AB b	0	$-3/2Fb+2Fx-1/2qx^2$	0	0	0	0
BA b	0	$Fx+1/2qx^2$	0	0		
BC b	0	Fx	0	0	0	0
CB b	0	$-Fb+Fx$	0	0		
CD $\sqrt{2}b$	0	$Fb-\sqrt{2}/2Fx$	0	0	0	0
DE b	0	0	0	0	0	0
ED b	0	0	0	0		
EF 2b	0	$-Fx+1/2qx^2$	0	0	0	0
FE 2b	0	$Fx-1/2qx^2$	0	0		
GA b	$-1+x/b$	$-3/2Fx$	$3/2Fx-3/2Fx^2/b$	$1-2x/b+x^2/b^2$	$1/4Fb^2/EJ$	$1/3Xb/EJ$
AG b	x/b	$3/2Fb-3/2Fx$	$3/2Fx-3/2Fx^2/b$	x^2/b^2		
FH b	0	$-5/2Fx$	0	0	0	0
HF b	0	$5/2Fb-5/2Fx$	0	0		
HI b	$1-x/b$	$-3/2Fb+1/2Fx$	$-3/2Fb+2Fx-1/2Fx^2/b$	$1-2x/b+x^2/b^2$	$-2/3Fb^2/EJ$	$1/3Xb/EJ$
IH b	$-x/b$	$Fb+1/2Fx$	$-Fx-1/2Fx^2/b$	x^2/b^2		
HG b	-1	$-Fb+Fx$	$Fb-Fx$	1	$1/2Fb^2/EJ$	Xb/EJ
GH b	1	Fx	Fx	1		
HG	elongazione asta $N_{1HG}\varepsilon_{HG}L_{HG}$				$-Fb^2/EJ$	
A	molla nodo $-V_{1A}(V_{0A}+XV_{1A})/k_A$				$-7/8Fb^2/EJ$	$1/4Xb/EJ$
	totali				$-43/24Fb^2/EJ$	$23/12Xb/EJ$
	iperstatica $X=W_{GA}$				43/46Fb	

Sviluppi di calcolo iperstatica

$L^{XX}_{GA} = \int_o^b (1 - 2\,x/b + x^2/b^2)\ 1/EJ\ dx = [\,x - x^2/b + 1/3\,x^3/b^2\,]_o^b\ 1/EJ$

$= (\,b - b + 1/3\,b\,)\ 1/EJ = 1/3\ b/EJ$

$L^{XX}_{AG} = \int_o^b (\,x^2/b^2\,)\ 1/EJ\ dx = [1/3\,x^3/b^2\,]_o^b\ 1/EJ$

$= (1/3\,b\,)\ 1/EJ = 1/3\ b/EJ$

$L^{XX}_{HI} = \int_o^b (1 - 2\,x/b + x^2/b^2)\ 1/EJ\ dx = [\,x - x^2/b + 1/3\,x^3/b^2\,]_o^b\ 1/EJ$

$= (\,b - b + 1/3\,b\,)\ 1/EJ = 1/3\ b/EJ$

$L^{XX}_{IH} = \int_o^b (\,x^2/b^2\,)\ 1/EJ\ dx = [1/3\,x^3/b^2\,]_o^b\ 1/EJ$

$= (1/3\,b\,)\ 1/EJ = 1/3\ b/EJ$

$L^{XX}_{HG} = \int_o^b (1)\ 1/EJ\ dx = [\,x\,]_o^b\ 1/EJ$

$= (\,b\,)\ 1/EJ = b/EJ$

$L^{XX}_{GH} = \int_o^b (1)\ 1/EJ\ dx = [\,x\,]_o^b\ 1/EJ$

$= (\,b\,)\ 1/EJ = b/EJ$

$L^{Xo}_{GA} = \int_o^b (3/2\,x/b - 3/2\,x^2/b^2)\ Fb\ 1/EJ\ dx = [3/4\,x^2/b - 1/2\,x^3/b^2\,]_o^b\ Fb\ 1/EJ$

$= (3/4\,b - 1/2\,b\,)\ Fb\ 1/EJ = 1/4\ Fb^2/EJ$

$L^{Xo}_{AG} = \int_o^b (3/2\,x/b - 3/2\,x^2/b^2)\ Fb\ 1/EJ\ dx = [3/4\,x^2/b - 1/2\,x^3/b^2\,]_o^b\ Fb\ 1/EJ$

$= (3/4\,b - 1/2\,b\,)\ Fb\ 1/EJ = 1/4\ Fb^2/EJ$

$L^{Xo}_{HI} = \int_o^b (-3/2 + 2\,x/b - 1/2\,x^2/b^2)\ Fb\ 1/EJ\ dx = [-3/2\,x + x^2/b - 1/6\,x^3/b^2\,]_o^b\ Fb\ 1/EJ$

$= (-3/2\,b + b - 1/6\,b\,)\ Fb\ 1/EJ = -2/3\ Fb^2/EJ$

$L^{Xo}_{IH} = \int_o^b (-\,x/b - 1/2\,x^2/b^2)\ Fb\ 1/EJ\ dx = [-1/2\,x^2/b - 1/6\,x^3/b^2\,]_o^b\ Fb\ 1/EJ$

$= (-1/2\,b - 1/6\,b\,)\ Fb\ 1/EJ = -2/3\ Fb^2/EJ$

$L^{Xo}_{HG} = \int_o^b (1 - x/b\,)\ Fb\ 1/EJ\ dx - 1\ \ (-1)\ \ (-1)\ \ Fb^2/EJ = [\,x - 1/2\,x^2/b\,]_o^b\ Fb\ 1/EJ\ \ - 1\ \ (-1)\ \ (-1)\ \ Fb^2/EJ$

$= (\,b - 1/2\,b\,)\ Fb\ 1/EJ\ \ - 1\ \ (-1)\ \ (-1)\ \ Fb^2/EJ = -1/2\ \ Fb^2/EJ$

$L^{Xo}_{GH} = \int_o^b (\,x/b\,)\ Fb\ 1/EJ\ dx - 1\ \ (-1)\ \ (-1)\ \ Fb^2/EJ = [1/2\,x^2/b\,]_o^b\ Fb\ 1/EJ\ \ - 1\ \ (-1)\ \ (-1)\ \ Fb^2/EJ$

$= (1/2\,b\,)\ Fb\ 1/EJ\ \ - 1\ \ (-1)\ \ (-1)\ \ Fb^2/EJ = -1/2\ \ Fb^2/EJ$

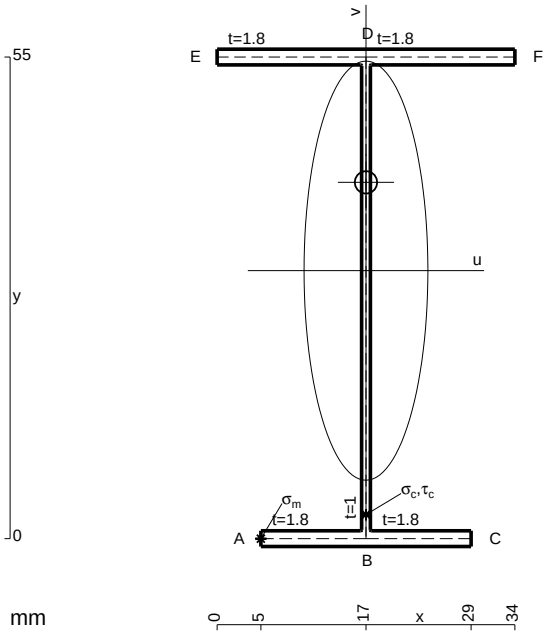

A = 159.4 mm^2
J_u = 91280. mm^4
J_v = 7969. mm^4
J_t = 131.1 mm^4
y_o = 10.08 mm
y_g = 30.61 mm
N = -460. N
T_y = -1150. N
M_x = -644000. Nmm
x_m = 5. mm
u_m = -12. mm
v_m = -30.61 mm
$\sigma_m = N/A - Mv/J_u$ = -218.8 N/mm^2
x_c = 17. mm
v_c = -30.61 mm
$\sigma_c = N/A - Mv/J_u$ = -218.8 N/mm^2
$\tau_c = TS^*/tJ_u$ = 16.66 N/mm^2
$\tau_g = TS^*/tJ_u$ = 16.66 N/mm^2
t_c = 460. mm
$\sigma_o = \sqrt{\sigma^2 + 3\tau^2}$ = 220.7 N/mm^2

ESΣ05.xxxx.122

@ Adolfo Zavelani Rossi, Politecnico di Milano, vers.27.03.13 01.12.25

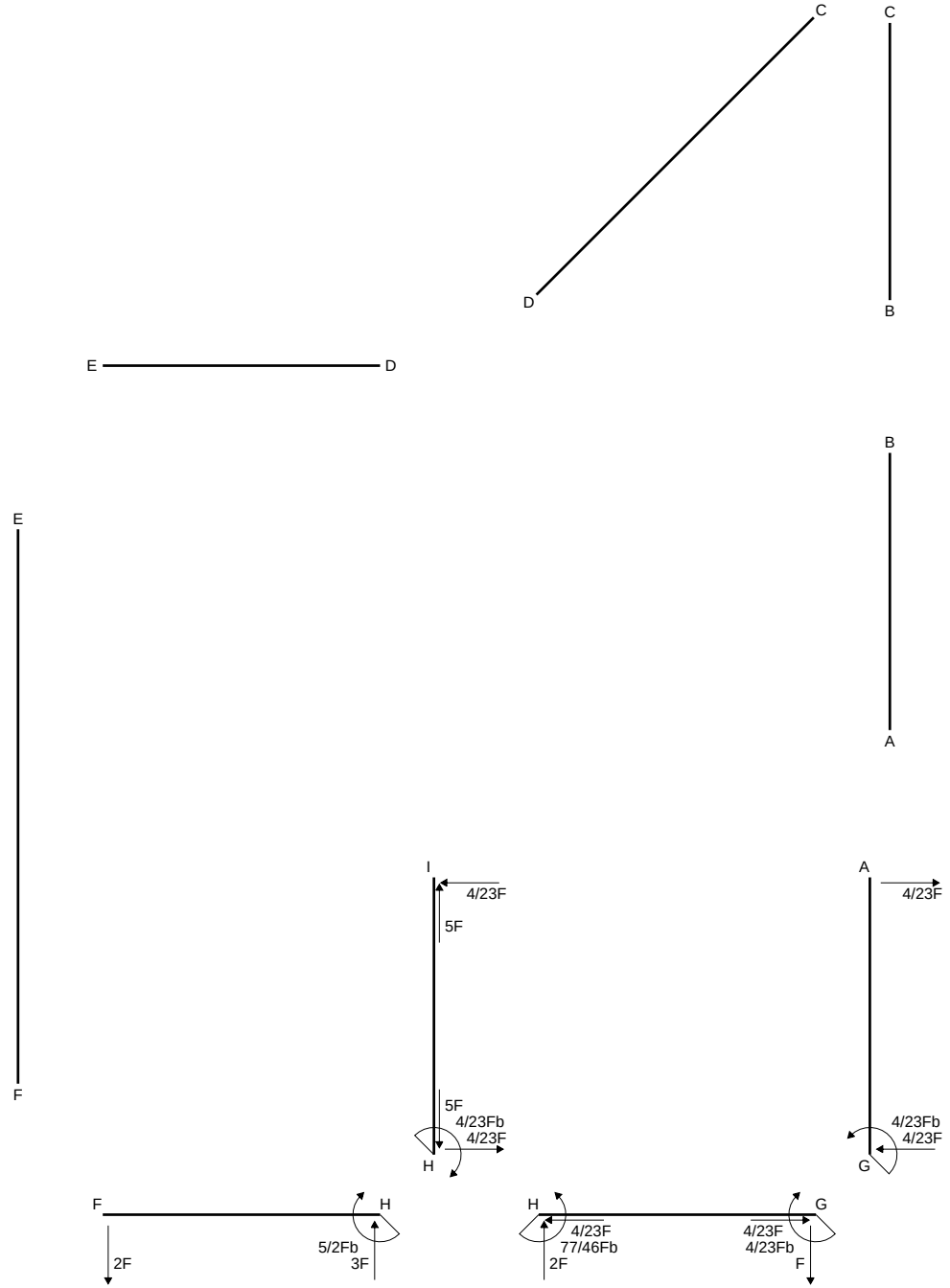
C
C
D
B
E
D
B
E
A
F
I
4/23F
5F
A
4/23F
5F
4/23Fb
4/23F
H
4/23Fb
4/23F
G
F
H
5/2Fb
3F
2F
H
G
4/23F
77/46Fb
2F
4/23F
4/23Fb
F

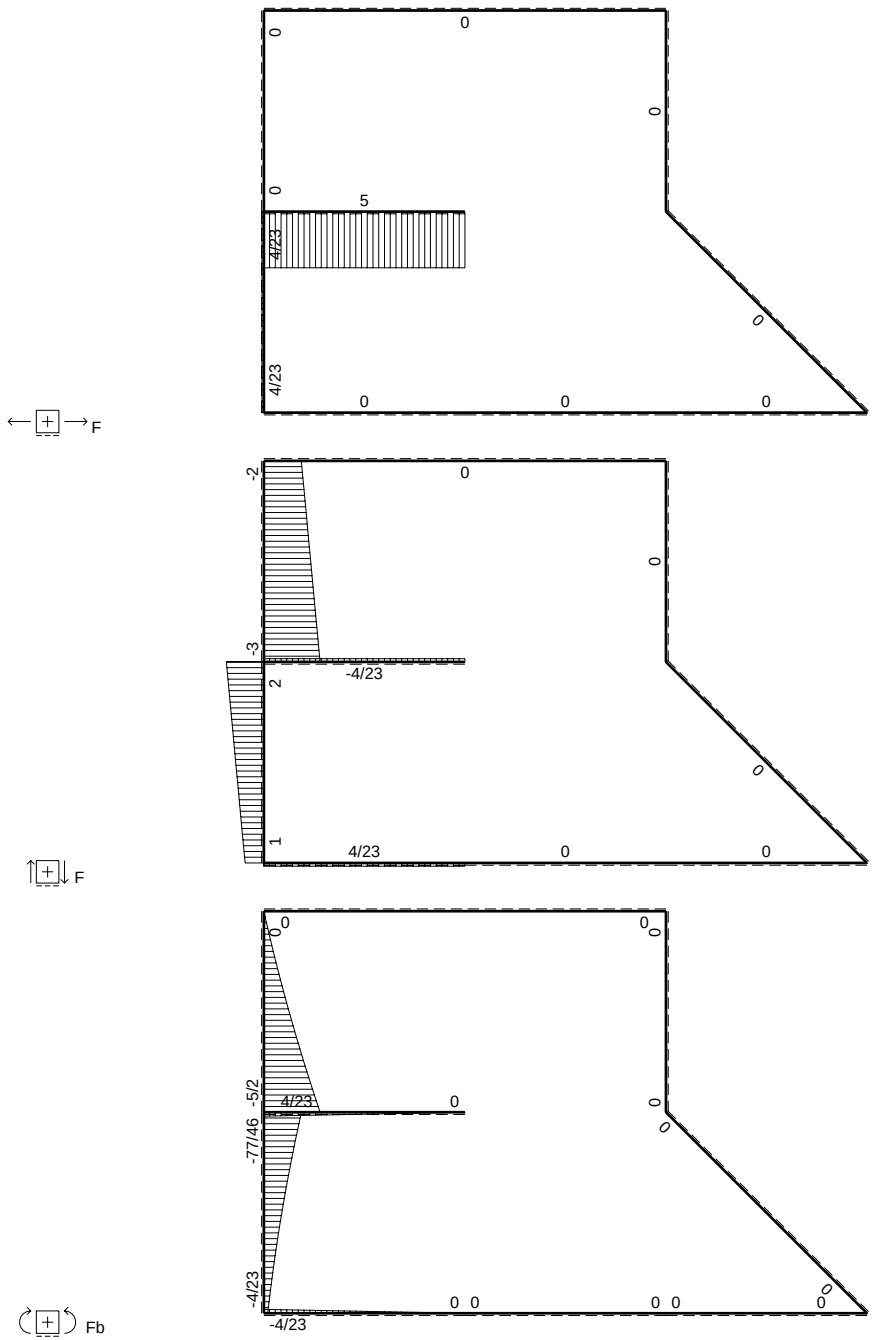
F
0
0
0
0
5
4/23
0
4/23
0
0
0
F
-2
0
0
-3
-4/23
2
0
1
4/23
0
0
Fb
0
0
0
-5/2
4/23
0
-77/46
0
0
-4/23
0 0
0 0
0
-4/23

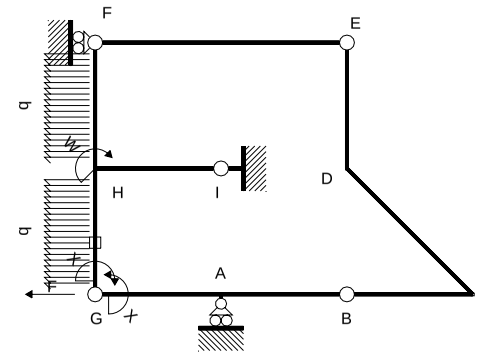

Schema di calcolo iperstatico

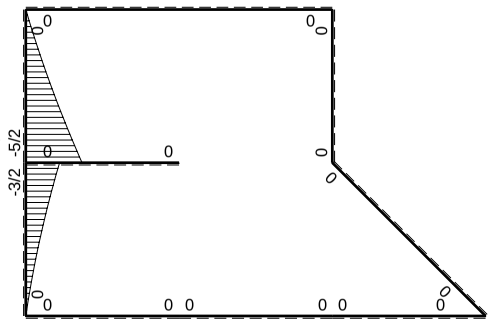

M_0 flessione da carichi assegnati

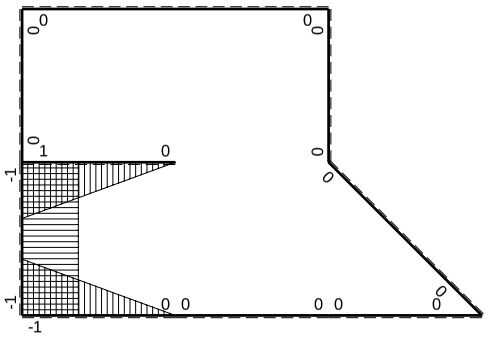

M_x flessione da iperstatica X=1

Quadro contributi PLV per iperstatica $X=W_{GA}$

→	$M_x(x)$	$M_0(x)$	M_xM_0	M_xM_x	$\int M_xM_0/EJdx$	$\int XM_xM_x/EJdx$
AB b	0	0	0	0	0	0
BA b	0	0	0	0		
BC b	0	0	0	0	0	0
CB b	0	0	0	0		
CD √2b	0	0	0	0	0	0
DE b	0	0	0	0	0	0
ED b	0	0	0	0		
EF 2b	0	0	0	0	0	0
FE 2b	0	0	0	0		
GA b	-1+x/b	0	0	$1-2x/b+x^2/b^2$	0	1/3Xb/EJ
AG b	x/b	0	0	x^2/b^2		
FH b	0	$-2Fx-1/2qx^2$	0	0	0	0
HF b	0	$5/2Fb-3Fx+1/2qx^2$	0	0		
HI b	1-x/b	0	0	$1-2x/b+x^2/b^2$	0	1/3Xb/EJ
IH b	-x/b	0	0	x^2/b^2		
HG b	-1	$-3/2Fb+2Fx-1/2qx^2$	$3/2Fb-2Fx+1/2Fx^2/b$	1	$2/3Fb^2/EJ$	Xb/EJ
GH b	1	$Fx+1/2qx^2$	$Fx+1/2Fx^2/b$	1		
HG	elongazione asta $N_{1HG}\varepsilon_{HG}L_{HG}$				$-Fb^2/EJ$	
A	molla nodo $-V_{1A}(V_{0A}+XV_{1A})/k_A$					1/4Xb/EJ
	totali				$-1/3Fb^2/EJ$	23/12Xb/EJ
	iperstatica $X=W_{GA}$				4/23Fb	

Sviluppi di calcolo iperstatica

$L^{XX}_{GA} = \int_o^b (1 - 2\,x/b + x^2/b^2)\ 1/EJ\ dx = [\ x - x^2/b + 1/3\ x^3/b^2\ ]_o^b\ 1/EJ$

$= (\ b - b + 1/3\ b\ )\ 1/EJ\ = 1/3\ b/EJ$

$L^{XX}_{AG} = \int_o^b (\ x^2/b^2\ )\ 1/EJ\ dx = [1/3\ x^3/b^2\ ]_o^b\ 1/EJ$

$= (1/3\ b\ )\ 1/EJ\ = 1/3\ b/EJ$

$L^{XX}_{HI} = \int_o^b (1 - 2\,x/b + x^2/b^2)\ 1/EJ\ dx = [\ x - x^2/b + 1/3\ x^3/b^2\ ]_o^b\ 1/EJ$

$= (\ b - b + 1/3\ b\ )\ 1/EJ\ = 1/3\ b/EJ$

$L^{XX}_{IH} = \int_o^b (\ x^2/b^2\ )\ 1/EJ\ dx = [1/3\ x^3/b^2\ ]_o^b\ 1/EJ$

$= (1/3\ b\ )\ 1/EJ\ = 1/3\ b/EJ$

$L^{XX}_{HG} = \int_o^b (1\ )\ 1/EJ\ dx = [\ x\ ]_o^b\ 1/EJ$

$= (\ b\ )\ 1/EJ\ =\ b/EJ$

$L^{XX}_{GH} = \int_o^b (1\ )\ 1/EJ\ dx = [\ x\ ]_o^b\ 1/EJ$

$= (\ b\ )\ 1/EJ\ =\ b/EJ$

$L^{Xo}_{HG} = \int_o^b (3/2 - 2\,x/b + 1/2\ x^2/b^2)\ Fb\ 1/EJ\ dx - 1\ \ (-1)\ \ (-1)\ \ Fb^2/EJ$

$= [3/2\ x - x^2/b + 1/6\ x^3/b^2\ ]_o^b\ Fb\ 1/EJ\ - 1\ \ (-1)\ \ (-1)\ \ Fb^2/EJ$

$= (3/2\ b - b + 1/6\ b\ )\ Fb\ 1/EJ\ - 1\ \ (-1)\ \ (-1)\ \ Fb^2/EJ = -1/3\ \ Fb^2/EJ$

$L^{Xo}_{GH} = \int_o^b (\ x/b + 1/2\ x^2/b^2\ )\ Fb\ 1/EJ\ dx - 1\ \ (-1)\ \ (-1)\ \ Fb^2/EJ$

$= [1/2\ x^2/b + 1/6\ x^3/b^2\ ]_o^b\ Fb\ 1/EJ\ - 1\ \ (-1)\ \ (-1)\ \ Fb^2/EJ$

$= (1/2\ b + 1/6\ b\ )\ Fb\ 1/EJ\ - 1\ \ (-1)\ \ (-1)\ \ Fb^2/EJ = -1/3\ \ Fb^2/EJ$

PROCEDIMENTO E RISULTATI 237187 ESΣ05.xxxx.123

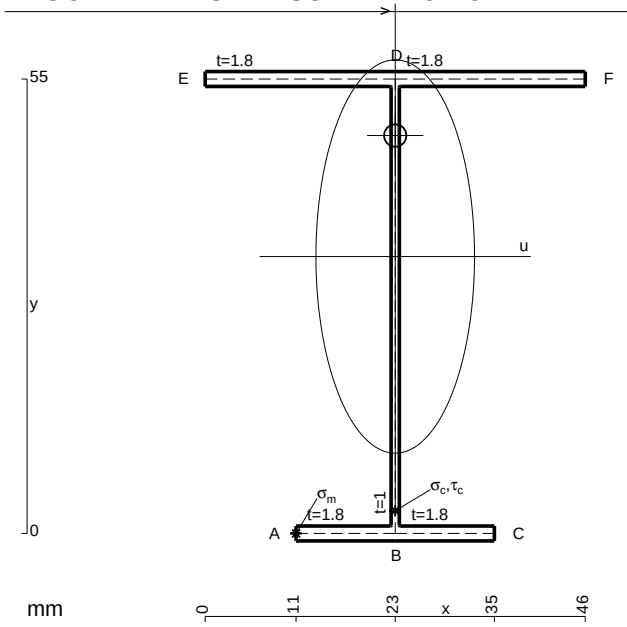

A = 181. mm^2
J_u = 102600. mm^4
J_v = 16674. mm^4
J_t = 154.4 mm^4
y_o = 14.64 mm
y_g = 33.52 mm
T_y = -1380. N
M_x = -701500. Nmm
x_m = 11. mm
u_m = -12. mm
v_m = -33.52 mm
$\sigma_m = -Mv/J_u$ = -229.2 N/mm^2
x_c = 23. mm
v_c = -33.52 mm
$\sigma_c = -Mv/J_u$ = -229.2 N/mm^2
$\tau_c = TS^*/tJ_u$ = 19.47 N/mm^2
$\tau_g = TS^*/tJ_u$ = 19.47 N/mm^2
t_c = 460. mm
$\sigma_o = \sqrt{\sigma^2 + 3\tau^2}$ = 231.6 N/mm^2

@ Adolfo Zavelani Rossi, Politecnico di Milano, vers.27.03.13 01.12.25

ESΣ05.xxxx.123

@ Adolfo Zavelani Rossi, Politecnico di Milano, vers.27.03.13 01.12.25

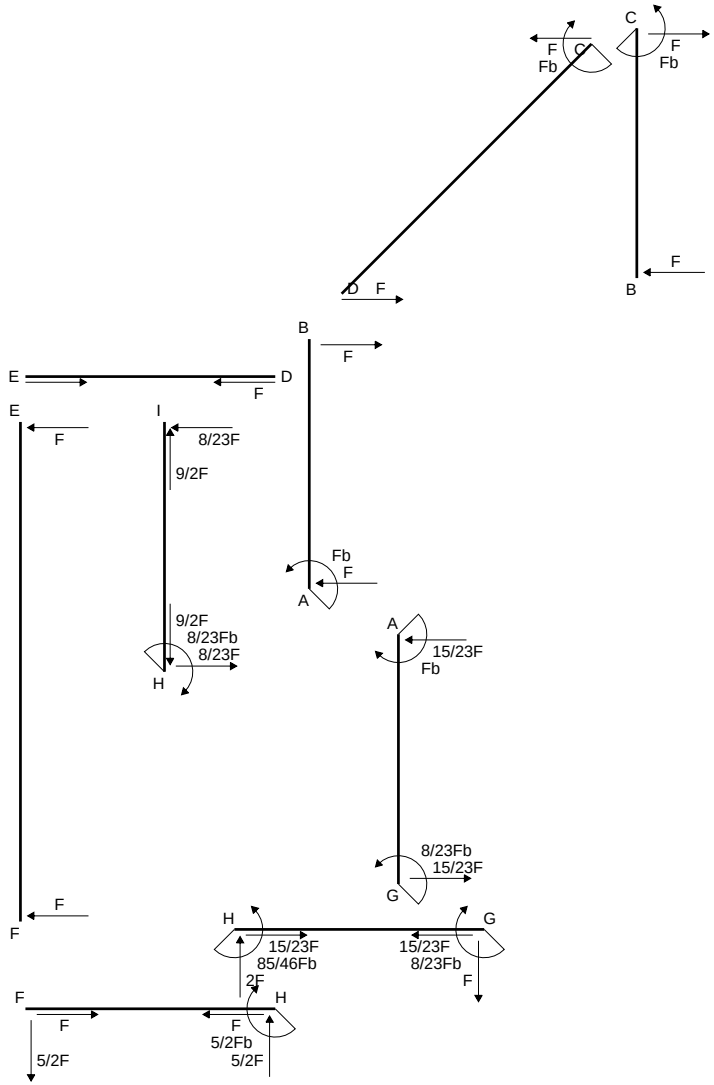
C
F
Fb
C
F
Fb
D
F
B
F
B
F
E
D
F
E
F
I
8/23F
9/2F
Fb
F
A
9/2F
8/23Fb
8/23F
H
A
15/23F
Fb
8/23Fb
15/23F
G
F
F
H
G
15/23F
85/46Fb
2F
15/23F
8/23Fb
F
F
H
F
F
5/2Fb
5/2F
5/2F

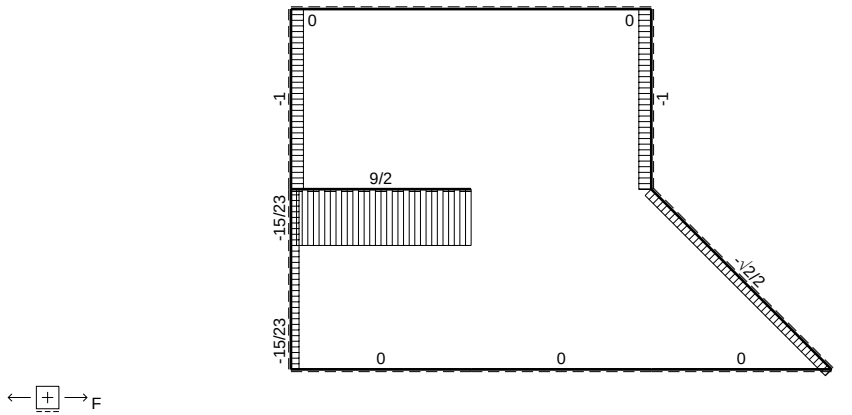
F
0
0
-1
-1
9/2
-15/23
-√2/2
-15/23
0
0
0

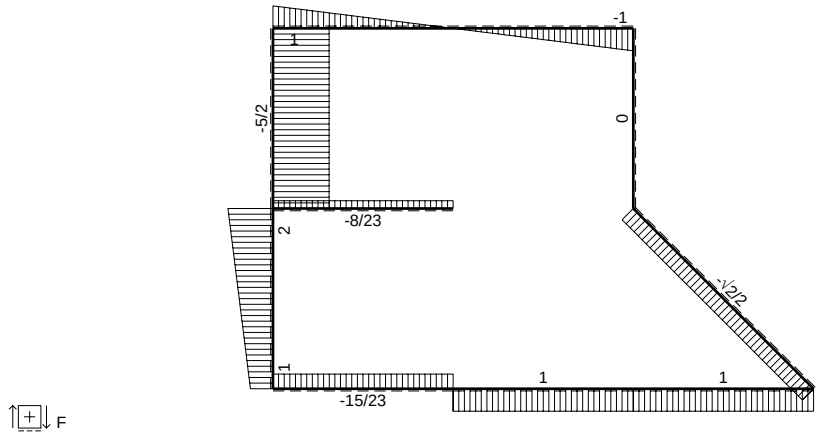
F
-1
1
-5/2
0
-8/23
2
-√2/2
1
1
1
-15/23

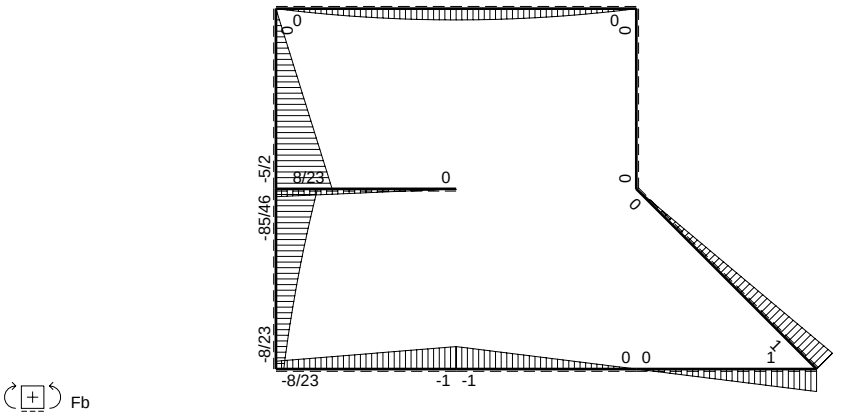
Fb
0
0
0
0
-5/2
8/23
0
0
0
-85/46
-8/23
0 0
1
-8/23
-1 -1

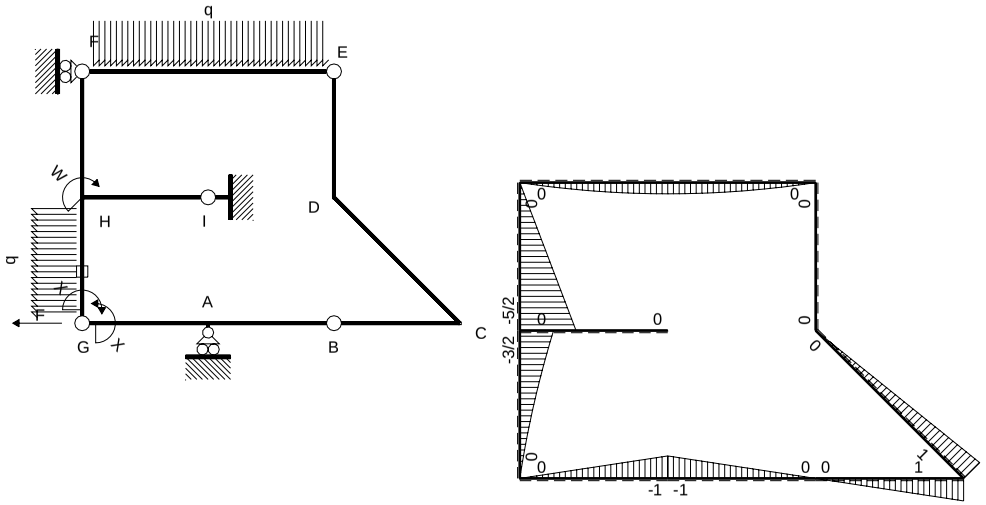

M_0 flessione da carichi assegnati

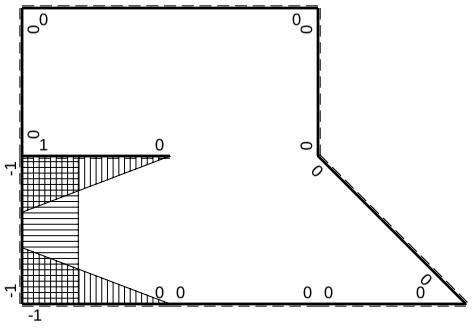

M_x flessione da iperstatica X=1

Quadro contributi PLV per iperstatica $X=W_{GA}$

→	$M_x(x)$	$M_0(x)$	M_xM_0	M_xM_x	$\int M_xM_0/EJdx$	$\int XM_xM_x/EJdx$
AB b	0	-Fb+Fx	0	0	0	0
BA b	0	Fx	0	0		
BC b	0	Fx	0	0	0	0
CB b	0	-Fb+Fx	0	0		
CD √2b	0	Fb-√2/2Fx	0	0	0	0
DE b	0	0	0	0	0	0
ED b	0	0	0	0		
EF 2b	0	$-Fx+1/2qx^2$	0	0	0	0
FE 2b	0	$Fx-1/2qx^2$	0	0		
GA b	-1+x/b	-Fx	$Fx-Fx^2/b$	$1-2x/b+x^2/b^2$	$1/6Fb^2/EJ$	1/3Xb/EJ
AG b	x/b	Fb-Fx	$Fx-Fx^2/b$	x^2/b^2		
FH b	0	-5/2Fx	0	0	0	0
HF b	0	5/2Fb-5/2Fx	0	0		
HI b	1-x/b	0	0	$1-2x/b+x^2/b^2$	0	1/3Xb/EJ
IH b	-x/b	0	0	x^2/b^2		
HG b	-1	$-3/2Fb+2Fx-1/2qx^2$	$3/2Fb-2Fx+1/2Fx^2/b$	1	$2/3Fb^2/EJ$	Xb/EJ
GH b	1	$Fx+1/2qx^2$	$Fx+1/2Fx^2/b$	1		
HG	elongazione asta $N_{1HG}\varepsilon_{HG}L_{HG}$				$-Fb^2/EJ$	
A	molla nodo $-V_{1A}(V_{0A}+XV_{1A})/k_A$				$-1/2Fb^2/EJ$	1/4Xb/EJ
	totali				$-2/3Fb^2/EJ$	23/12Xb/EJ
	iperstatica $X=W_{GA}$				8/23Fb	

Sviluppi di calcolo iperstatica

$L^{XX}_{GA} = \int_o^b (1 - 2\,x/b + x^2/b^2)\ 1/EJ\ dx = [\,x - x^2/b + 1/3\,x^3/b^2\,]_o^b\ 1/EJ$

$= (\,b - b + 1/3\,b\,)\ 1/EJ = 1/3\ b/EJ$

$L^{XX}_{AG} = \int_o^b (\,x^2/b^2\,)\ 1/EJ\ dx = [1/3\,x^3/b^2\,]_o^b\ 1/EJ$

$= (1/3\,b\,)\ 1/EJ = 1/3\ b/EJ$

$L^{XX}_{HI} = \int_o^b (1 - 2\,x/b + x^2/b^2)\ 1/EJ\ dx = [\,x - x^2/b + 1/3\,x^3/b^2\,]_o^b\ 1/EJ$

$= (\,b - b + 1/3\,b\,)\ 1/EJ = 1/3\ b/EJ$

$L^{XX}_{IH} = \int_o^b (\,x^2/b^2\,)\ 1/EJ\ dx = [1/3\,x^3/b^2\,]_o^b\ 1/EJ$

$= (1/3\,b\,)\ 1/EJ = 1/3\ b/EJ$

$L^{XX}_{HG} = \int_o^b (1)\ 1/EJ\ dx = [\,x\,]_o^b\ 1/EJ$

$= (\,b\,)\ 1/EJ = b/EJ$

$L^{XX}_{GH} = \int_o^b (1)\ 1/EJ\ dx = [\,x\,]_o^b\ 1/EJ$

$= (\,b\,)\ 1/EJ = b/EJ$

$L^{Xo}_{GA} = \int_o^b (\,x/b - x^2/b^2\,)\ Fb\ 1/EJ\ dx = [1/2\,x^2/b - 1/3\,x^3/b^2\,]_o^b\ Fb\ 1/EJ$

$= (1/2\,b - 1/3\,b\,)\ Fb\ 1/EJ = 1/6\ Fb^2/EJ$

$L^{Xo}_{AG} = \int_o^b (\,x/b - x^2/b^2\,)\ Fb\ 1/EJ\ dx = [1/2\,x^2/b - 1/3\,x^3/b^2\,]_o^b\ Fb\ 1/EJ$

$= (1/2\,b - 1/3\,b\,)\ Fb\ 1/EJ = 1/6\ Fb^2/EJ$

$L^{Xo}_{HG} = \int_o^b (3/2 - 2\,x/b + 1/2\,x^2/b^2\,)\ Fb\ 1/EJ\ dx - 1\ \ (-1)\ \ (-1)\ \ Fb^2/EJ$

$= [3/2\,x - x^2/b + 1/6\,x^3/b^2\,]_o^b\ Fb\ 1/EJ\ - 1\ \ (-1)\ \ (-1)\ \ Fb^2/EJ$

$= (3/2\,b - b + 1/6\,b\,)\ Fb\ 1/EJ\ - 1\ \ (-1)\ \ (-1)\ \ Fb^2/EJ = -1/3\ \ Fb^2/EJ$

$L^{Xo}_{GH} = \int_o^b (\,x/b + 1/2\,x^2/b^2\,)\ Fb\ 1/EJ\ dx - 1\ \ (-1)\ \ (-1)\ \ Fb^2/EJ$

$= [1/2\,x^2/b + 1/6\,x^3/b^2\,]_o^b\ Fb\ 1/EJ\ - 1\ \ (-1)\ \ (-1)\ \ Fb^2/EJ$

$= (1/2\,b + 1/6\,b\,)\ Fb\ 1/EJ\ - 1\ \ (-1)\ \ (-1)\ \ Fb^2/EJ = -1/3\ \ Fb^2/EJ$

PROCEDIMENTO E RISULTATI 240392 ESΣ05.xxxx.124

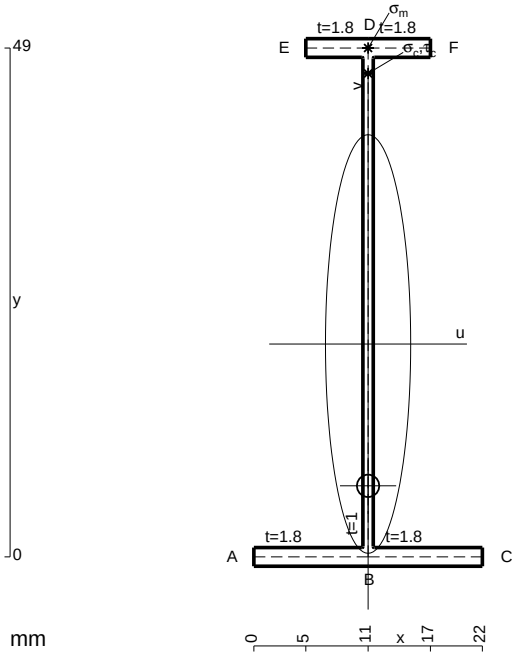

A = 110.2 mm^2
J_u = 44775. mm^4
J_v = 1856. mm^4
J_t = 82.43 mm^4
y_o = -13.66 mm
y_g = 20.5 mm
N = -260. N
T_y = -650. N
M_x = -377000. Nmm
x_m = 11. mm
y_m = 49. mm
v_m = 28.5 mm
$\sigma_m = N/A - Mv/J_u$ = 237.6 N/mm^2
y_c = 2. mm
u_c = -11. mm
v_c = -18.5 mm
$\sigma_c = N/A - Mv/J_u$ = 237.6 N/mm^2
$\tau_c = TS^*/tJ_u$ = 8.937 N/mm^2
$\tau_g = TS^*/tJ_u$ = 8.937 N/mm^2
t_c = 260. mm
$\sigma_o = \sqrt{\sigma^2 + 3\tau^2}$ = 238.1 N/mm^2

@ Adolfo Zavelani Rossi, Politecnico di Milano, vers.27.03.13 01.12.25

ESΣ05.xxxx.124

@ Adolfo Zavelani Rossi, Politecnico di Milano, vers.27.03.13 01.12.25

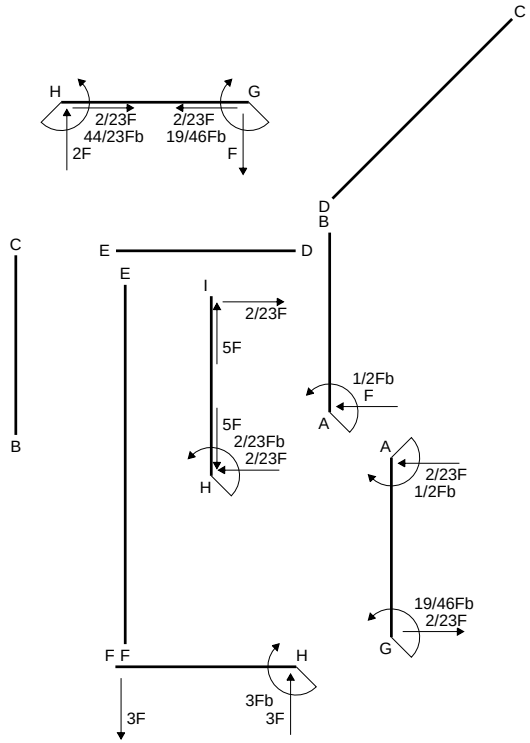
H
G
2/23F
44/23Fb
2F
2/23F
19/46Fb
F
C
D
B
E
D
C
B
E
I
2/23F
5F
1/2Fb
F
A
5F
2/23Fb
2/23F
H
A
2/23F
1/2Fb
19/46Fb
2/23F
G
F F
H
3Fb
3F
3F

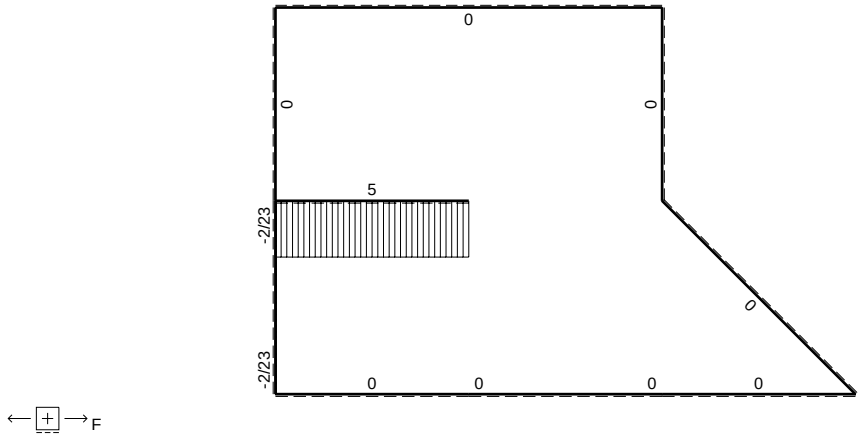
F
0
0
0
5
-2/23
0
-2/23
0 0 0 0

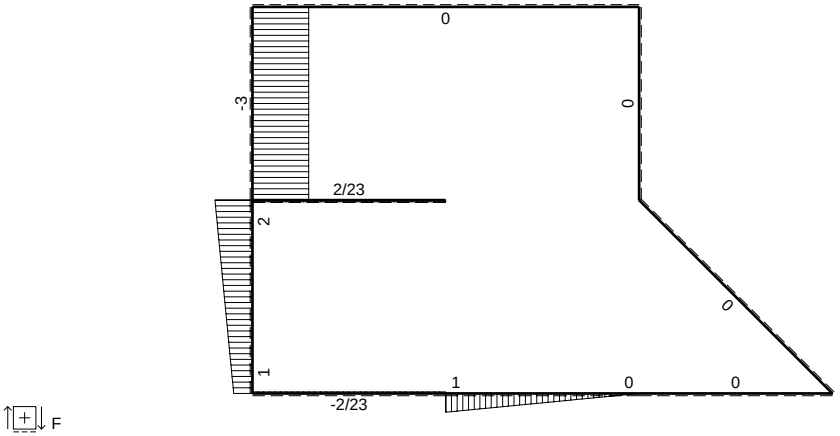
F
0
-3
0
2/23
2
0
1
1
0 0
-2/23

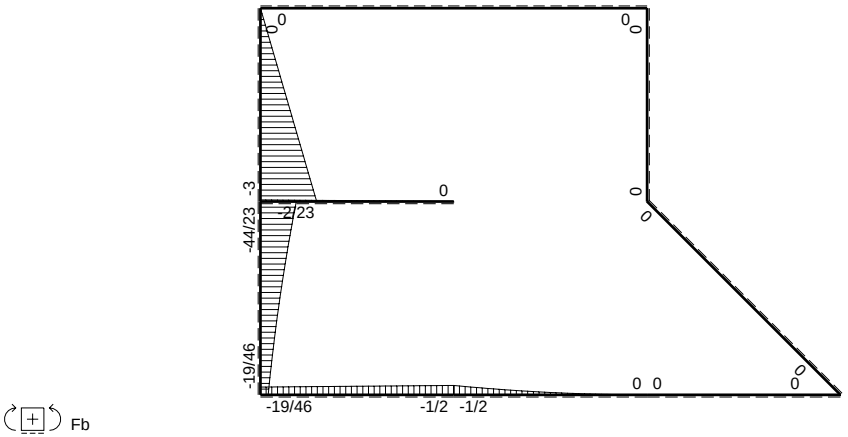
Fb
0
0
0
0
-3
0
0
2/23
-44/23
0
-19/46
0 0
0
-19/46
-1/2 -1/2

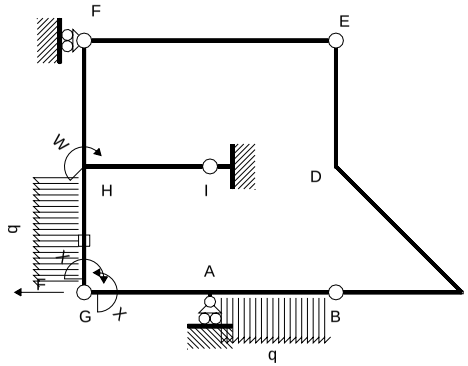

Schema di calcolo iperstatico

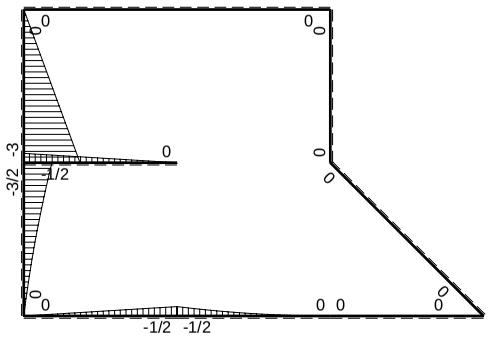

M_0 flessione da carichi assegnati

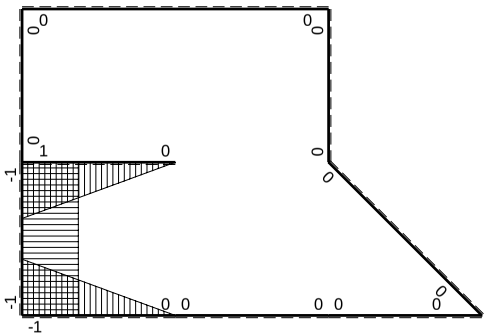

M_x flessione da iperstatica X=1

Quadro contributi PLV per iperstatica $X=W_{GA}$

→	$M_x(x)$	$M_0(x)$	M_xM_0	M_xM_x	$\int M_xM_0/EJdx$	$\int XM_xM_x/EJdx$
AB b	0	$-1/2Fb+Fx-1/2qx^2$	0	0	0	0
BA b	0	$1/2qx^2$	0	0		
BC b	0	0	0	0	0	0
CB b	0	0	0	0		
CD √2b	0	0	0	0	0	0
DE b	0	0	0	0	0	0
ED b	0	0	0	0		
EF 2b	0	0	0	0	0	0
FE 2b	0	0	0	0		
GA b	$-1+x/b$	$-1/2Fx$	$1/2Fx-1/2Fx^2/b$	$1-2x/b+x^2/b^2$	$1/12Fb^2/EJ$	$1/3Xb/EJ$
AG b	x/b	$1/2Fb-1/2Fx$	$1/2Fx-1/2Fx^2/b$	x^2/b^2		
FH b	0	$-3Fx$	0	0	0	0
HF b	0	$3Fb-3Fx$	0	0		
HI b	$1-x/b$	$-1/2Fb+1/2Fx$	$-1/2Fb+Fx-1/2Fx^2/b$	$1-2x/b+x^2/b^2$	$-1/6Fb^2/EJ$	$1/3Xb/EJ$
IH b	$-x/b$	$1/2Fx$	$-1/2Fx^2/b$	x^2/b^2		
HG b	-1	$-3/2Fb+2Fx-1/2qx^2$	$3/2Fb-2Fx+1/2Fx^2/b$	1	$2/3Fb^2/EJ$	Xb/EJ
GH b	1	$Fx+1/2qx^2$	$Fx+1/2Fx^2/b$	1		
HG	elongazione asta $N_{1HG}\varepsilon_{HG}L_{HG}$				$-Fb^2/EJ$	
A	molla nodo $-V_{1A}(V_{0A}+XV_{1A})/k_A$				$-3/8Fb^2/EJ$	$1/4Xb/EJ$
	totali				$-19/24Fb^2/EJ$	$23/12Xb/EJ$
	iperstatica $X=W_{GA}$				19/46Fb	

Sviluppi di calcolo iperstatica

$L^{XX}_{GA} = \int_o^b (1 - 2\,x/b + x^2/b^2)\ 1/EJ\ dx = [\,x - x^2/b + 1/3\,x^3/b^2\,]_o^b\ 1/EJ$

$= (\,b - b + 1/3\,b\,)\ 1/EJ = 1/3\ b/EJ$

$L^{XX}_{AG} = \int_o^b (\,x^2/b^2\,)\ 1/EJ\ dx = [1/3\,x^3/b^2\,]_o^b\ 1/EJ$

$= (1/3\,b\,)\ 1/EJ = 1/3\ b/EJ$

$L^{XX}_{HI} = \int_o^b (1 - 2\,x/b + x^2/b^2)\ 1/EJ\ dx = [\,x - x^2/b + 1/3\,x^3/b^2\,]_o^b\ 1/EJ$

$= (\,b - b + 1/3\,b\,)\ 1/EJ = 1/3\ b/EJ$

$L^{XX}_{IH} = \int_o^b (\,x^2/b^2\,)\ 1/EJ\ dx = [1/3\,x^3/b^2\,]_o^b\ 1/EJ$

$= (1/3\,b\,)\ 1/EJ = 1/3\ b/EJ$

$L^{XX}_{HG} = \int_o^b (1)\ 1/EJ\ dx = [\,x\,]_o^b\ 1/EJ$

$= (\,b\,)\ 1/EJ = b/EJ$

$L^{XX}_{GH} = \int_o^b (1)\ 1/EJ\ dx = [\,x\,]_o^b\ 1/EJ$

$= (\,b\,)\ 1/EJ = b/EJ$

$L^{Xo}_{GA} = \int_o^b (1/2\,x/b - 1/2\,x^2/b^2)\ Fb\ 1/EJ\ dx = [1/4\,x^2/b - 1/6\,x^3/b^2\,]_o^b\ Fb\ 1/EJ$

$= (1/4\,b - 1/6\,b\,)\ Fb\ 1/EJ = 1/12\ Fb^2/EJ$

$L^{Xo}_{AG} = \int_o^b (1/2\,x/b - 1/2\,x^2/b^2)\ Fb\ 1/EJ\ dx = [1/4\,x^2/b - 1/6\,x^3/b^2\,]_o^b\ Fb\ 1/EJ$

$= (1/4\,b - 1/6\,b\,)\ Fb\ 1/EJ = 1/12\ Fb^2/EJ$

$L^{Xo}_{HI} = \int_o^b (-1/2 + x/b - 1/2\,x^2/b^2)\ Fb\ 1/EJ\ dx = [-1/2\,x + 1/2\,x^2/b - 1/6\,x^3/b^2\,]_o^b\ Fb\ 1/EJ$

$= (-1/2\,b + 1/2\,b - 1/6\,b\,)\ Fb\ 1/EJ = -1/6\ Fb^2/EJ$

$L^{Xo}_{IH} = \int_o^b (-1/2\,x^2/b^2)\ Fb\ 1/EJ\ dx = [-1/6\,x^3/b^2\,]_o^b\ Fb\ 1/EJ$

$= (-1/6\,b\,)\ Fb\ 1/EJ = -1/6\ Fb^2/EJ$

$L^{Xo}_{HG} = \int_o^b (3/2 - 2\,x/b + 1/2\,x^2/b^2)\ Fb\ 1/EJ\ dx - 1\ \ (-1)\ \ (-1)\ Fb^2/EJ$

$= [3/2\,x - x^2/b + 1/6\,x^3/b^2\,]_o^b\ Fb\ 1/EJ\ - 1\ \ (-1)\ \ (-1)\ Fb^2/EJ$

$= (3/2\,b - b + 1/6\,b\,)\ Fb\ 1/EJ\ - 1\ \ (-1)\ \ (-1)\ Fb^2/EJ = -1/3\ Fb^2/EJ$

$L^{Xo}_{GH} = \int_o^b (\,x/b + 1/2\,x^2/b^2\,)\ Fb\ 1/EJ\ dx - 1\ \ (-1)\ \ (-1)\ Fb^2/EJ$

$= [1/2\,x^2/b + 1/6\,x^3/b^2\,]_o^b\ Fb\ 1/EJ\ - 1\ \ (-1)\ \ (-1)\ Fb^2/EJ$

$= (1/2\,b + 1/6\,b\,)\ Fb\ 1/EJ\ - 1\ \ (-1)\ \ (-1)\ Fb^2/EJ = -1/3\ Fb^2/EJ$

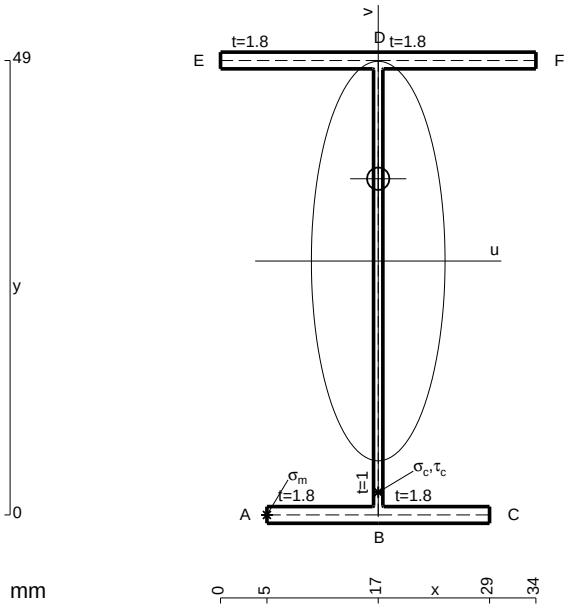

A = 153.4 mm^2
J_u = 71202. mm^4
J_v = 7969. mm^4
J_t = 129.1 mm^4
y_o = 8.875 mm
y_g = 27.37 mm
T_y = -810. N
M_x = -510300. Nmm
x_m = 5. mm
u_m = -12. mm
v_m = -27.37 mm
$\sigma_m = -Mv/J_u$ = -196.2 N/mm^2
x_c = 17. mm
v_c = -27.37 mm
$\sigma_c = -Mv/J_u$ = -196.2 N/mm^2
$\tau_c = TS^*/tJ_u$ = 13.45 N/mm^2
$\tau_g = TS^*/tJ_u$ = 13.45 N/mm^2
t_c = 270. mm
$\sigma_o = \sqrt{\sigma^2 + 3\tau^2}$ = 197.6 N/mm^2

ESΣ05.xxxx.125

@ Adolfo Zavelani Rossi, Politecnico di Milano, vers.27.03.13 01.12.25

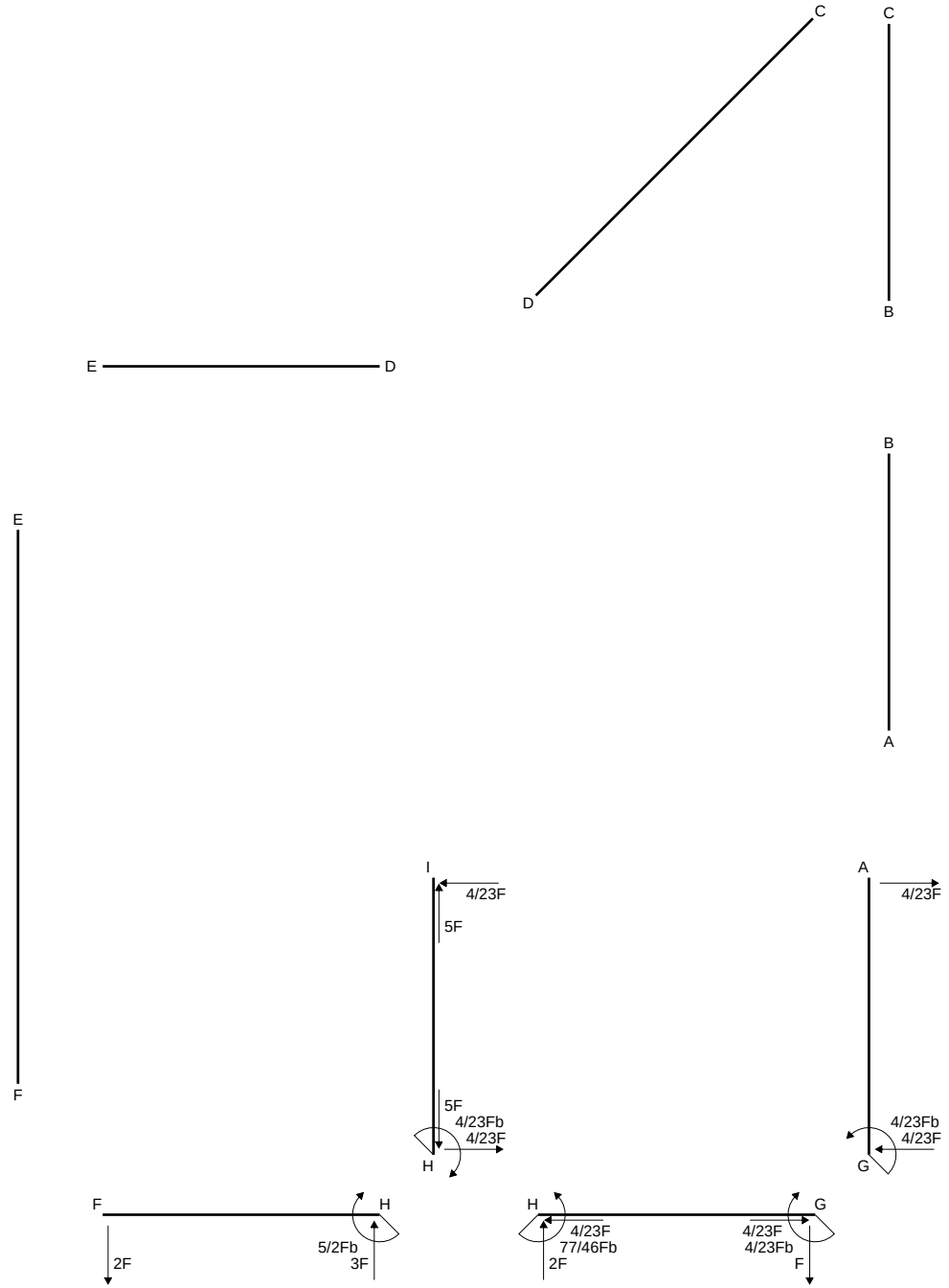
C
C
D
B
E
D
B
E
A
F
I
4/23F
5F
A
4/23F
5F
4/23Fb
4/23F
H
4/23Fb
4/23F
G
F
H
5/2Fb
3F
2F
H
G
4/23F
77/46Fb
2F
4/23F
4/23Fb
F

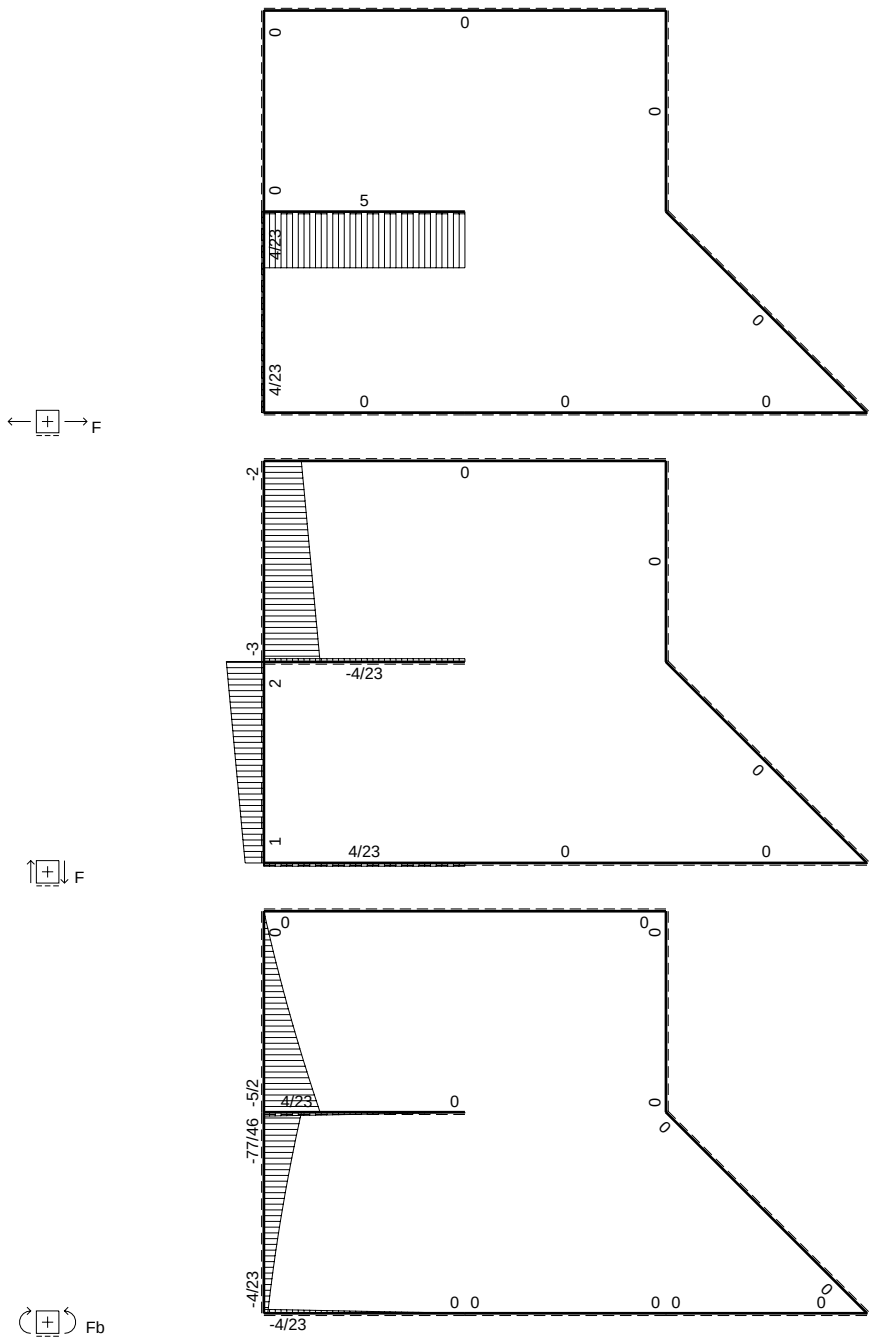
0
0
0
0
5
4/23
0
4/23
0
0
0
F
-2
0
0
-3
-4/23
2
0
1
4/23
0
0
F
0
0
0
0
-5/2
4/23
0
-77/46
0
0
-4/23
0 0
0 0
0
-4/23
Fb

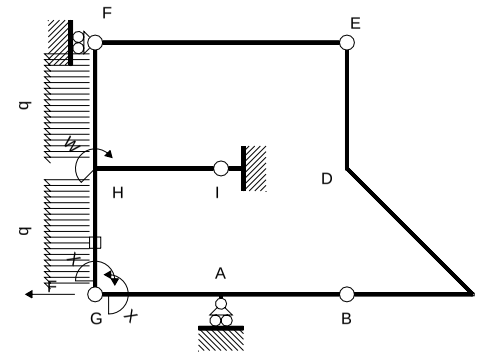

Schema di calcolo iperstatico

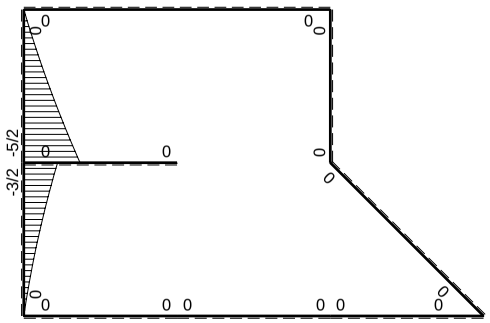

M_0 flessione da carichi assegnati

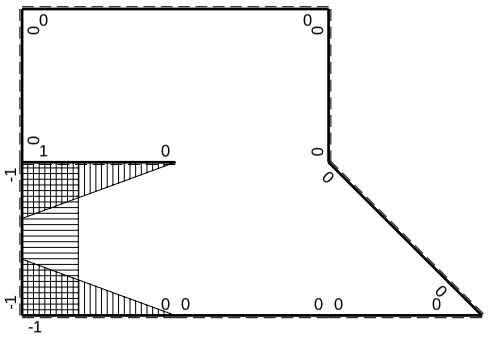

M_x flessione da iperstatica X=1

Quadro contributi PLV per iperstatica $X=W_{GA}$

→	$M_x(x)$	$M_0(x)$	M_xM_0	M_xM_x	$\int M_xM_0/EJdx$	$\int XM_xM_x/EJdx$
AB b	0	0	0	0	0	0
BA b	0	0	0	0		
BC b	0	0	0	0	0	0
CB b	0	0	0	0		
CD √2b	0	0	0	0	0	0
DE b	0	0	0	0	0	0
ED b	0	0	0	0		
EF 2b	0	0	0	0	0	0
FE 2b	0	0	0	0		
GA b	-1+x/b	0	0	$1-2x/b+x^2/b^2$	0	1/3Xb/EJ
AG b	x/b	0	0	x^2/b^2		
FH b	0	$-2Fx-1/2qx^2$	0	0	0	0
HF b	0	$5/2Fb-3Fx+1/2qx^2$	0	0		
HI b	1-x/b	0	0	$1-2x/b+x^2/b^2$	0	1/3Xb/EJ
IH b	-x/b	0	0	x^2/b^2		
HG b	-1	$-3/2Fb+2Fx-1/2qx^2$	$3/2Fb-2Fx+1/2Fx^2/b$	1	$2/3Fb^2/EJ$	Xb/EJ
GH b	1	$Fx+1/2qx^2$	$Fx+1/2Fx^2/b$	1		
HG	elongazione asta $N_{1HG}\varepsilon_{HG}L_{HG}$				$-Fb^2/EJ$	
A	molla nodo $-V_{1A}(V_{0A}+XV_{1A})/k_A$					1/4Xb/EJ
	totali				$-1/3Fb^2/EJ$	23/12Xb/EJ
	iperstatica $X=W_{GA}$				4/23Fb	

Sviluppi di calcolo iperstatica

$L^{XX}_{GA} = \int_o^b (1 - 2\,x/b + x^2/b^2)\ 1/EJ\ dx = [\ x - x^2/b + 1/3\ x^3/b^2\ ]_o^b\ 1/EJ$

$= (\ b - b + 1/3\ b\ )\ 1/EJ\ = 1/3\ b/EJ$

$L^{XX}_{AG} = \int_o^b (\ x^2/b^2\ )\ 1/EJ\ dx = [1/3\ x^3/b^2\ ]_o^b\ 1/EJ$

$= (1/3\ b\ )\ 1/EJ\ = 1/3\ b/EJ$

$L^{XX}_{HI} = \int_o^b (1 - 2\,x/b + x^2/b^2)\ 1/EJ\ dx = [\ x - x^2/b + 1/3\ x^3/b^2\ ]_o^b\ 1/EJ$

$= (\ b - b + 1/3\ b\ )\ 1/EJ\ = 1/3\ b/EJ$

$L^{XX}_{IH} = \int_o^b (\ x^2/b^2\ )\ 1/EJ\ dx = [1/3\ x^3/b^2\ ]_o^b\ 1/EJ$

$= (1/3\ b\ )\ 1/EJ\ = 1/3\ b/EJ$

$L^{XX}_{HG} = \int_o^b (1\ )\ 1/EJ\ dx = [\ x\ ]_o^b\ 1/EJ$

$= (\ b\ )\ 1/EJ\ =\ b/EJ$

$L^{XX}_{GH} = \int_o^b (1\ )\ 1/EJ\ dx = [\ x\ ]_o^b\ 1/EJ$

$= (\ b\ )\ 1/EJ\ =\ b/EJ$

$L^{Xo}_{HG} = \int_o^b (3/2 - 2\,x/b + 1/2\ x^2/b^2)\ Fb\ 1/EJ\ dx - 1\ \ (-1)\ \ (-1)\ \ Fb^2/EJ$

$= [3/2\ x - x^2/b + 1/6\ x^3/b^2\ ]_o^b\ Fb\ 1/EJ\ - 1\ \ (-1)\ \ (-1)\ \ Fb^2/EJ$

$= (3/2\ b - b + 1/6\ b\ )\ Fb\ 1/EJ\ - 1\ \ (-1)\ \ (-1)\ \ Fb^2/EJ = -1/3\ \ Fb^2/EJ$

$L^{Xo}_{GH} = \int_o^b (\ x/b + 1/2\ x^2/b^2\ )\ Fb\ 1/EJ\ dx - 1\ \ (-1)\ \ (-1)\ \ Fb^2/EJ$

$= [1/2\ x^2/b + 1/6\ x^3/b^2\ ]_o^b\ Fb\ 1/EJ\ - 1\ \ (-1)\ \ (-1)\ \ Fb^2/EJ$

$= (1/2\ b + 1/6\ b\ )\ Fb\ 1/EJ\ - 1\ \ (-1)\ \ (-1)\ \ Fb^2/EJ = -1/3\ \ Fb^2/EJ$

PROCEDIMENTO E RISULTATI 240146 ESΣ05.xxxx.126

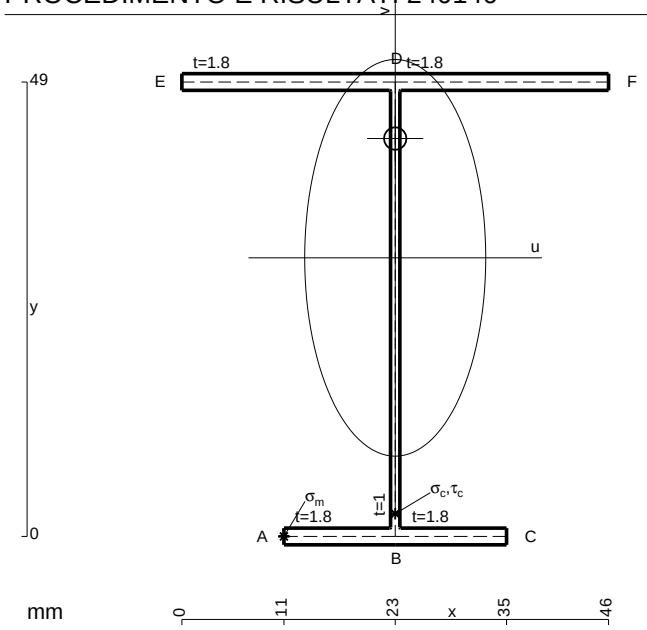

A = 175. mm^2
J_u = 80057. mm^4
J_v = 16674. mm^4
J_t = 152.4 mm^4
y_o = 12.86 mm
y_g = 30.04 mm
T_y = -990. N
M_x = -552750. Nmm
x_m = 11. mm
u_m = -12. mm
v_m = -30.04 mm
$\sigma_m = -Mv/J_u$ = -207.4 N/mm^2
x_c = 23. mm
v_c = -30.04 mm
$\sigma_c = -Mv/J_u$ = -207.4 N/mm^2
$\tau_c = TS^*/tJ_u$ = 16.05 N/mm^2
$\tau_g = TS^*/tJ_u$ = 16.05 N/mm^2
t_c = 330. mm
$\sigma_o = \sqrt{\sigma^2 + 3\tau^2}$ = 209.3 N/mm^2

@ Adolfo Zavelani Rossi, Politecnico di Milano, vers.27.03.13 01.12.25

ESΣ05.xxxx.126

@ Adolfo Zavelani Rossi, Politecnico di Milano, vers.27.03.13 01.12.25

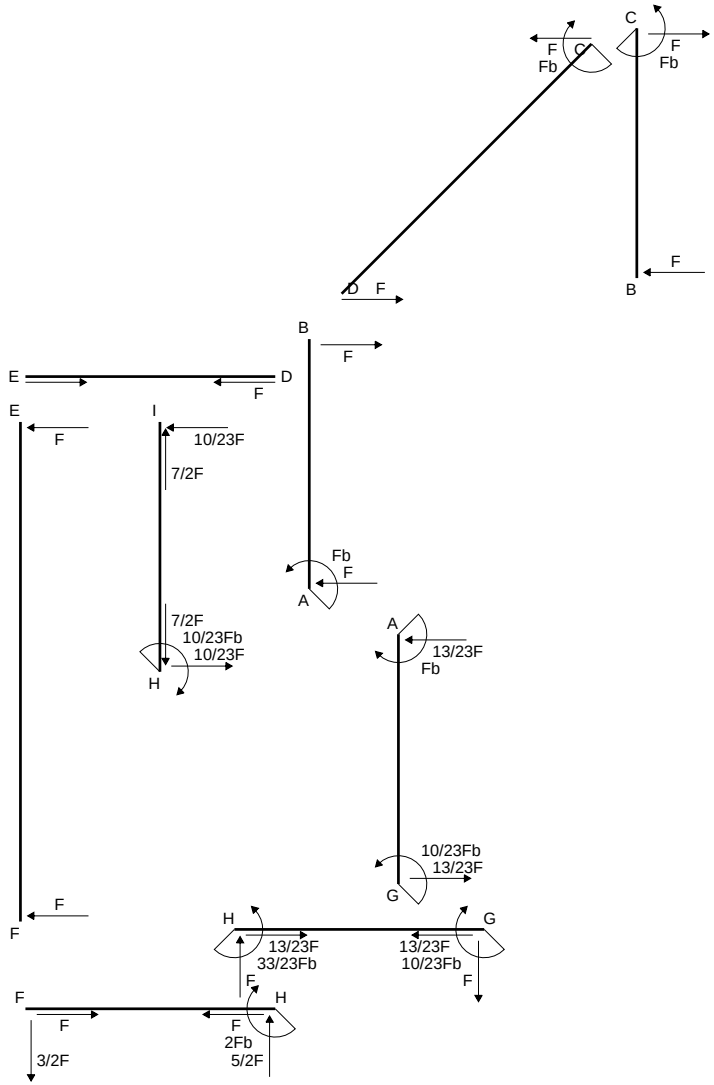
C
F
Fb
C
F
Fb
D
F
B
F
B
F
E
D
F
E
F
I
10/23F
7/2F
Fb
F
A
7/2F
10/23Fb
10/23F
H
A
13/23F
Fb
10/23Fb
13/23F
G
F
F
H
G
13/23F
33/23Fb
13/23F
10/23Fb
F
F
F
H
F
F
2Fb
5/2F
3/2F

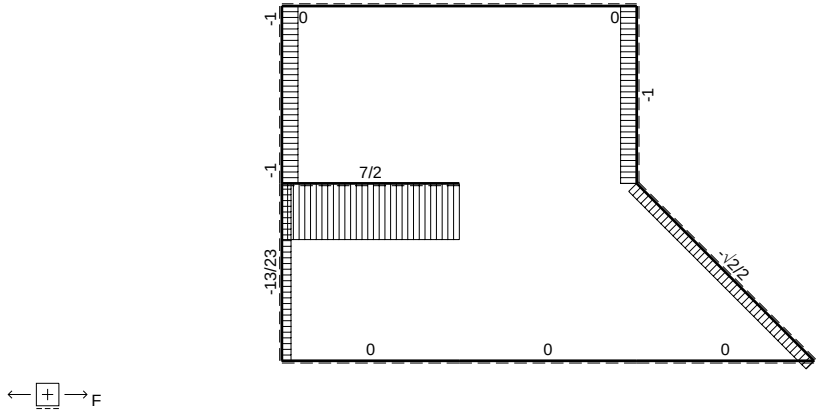
-1
0
0
-1
-1
7/2
-13/23
-√2/2
0
0
0
F

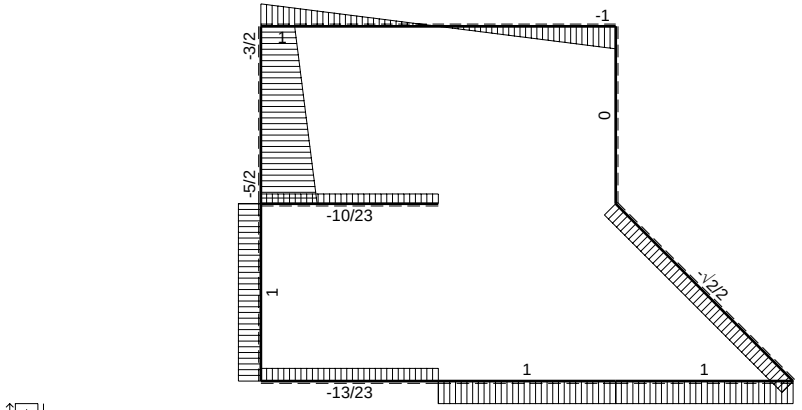
-1
-3/2
1
0
-5/2
-10/23
-√2/2
1
1
1
-13/23
F

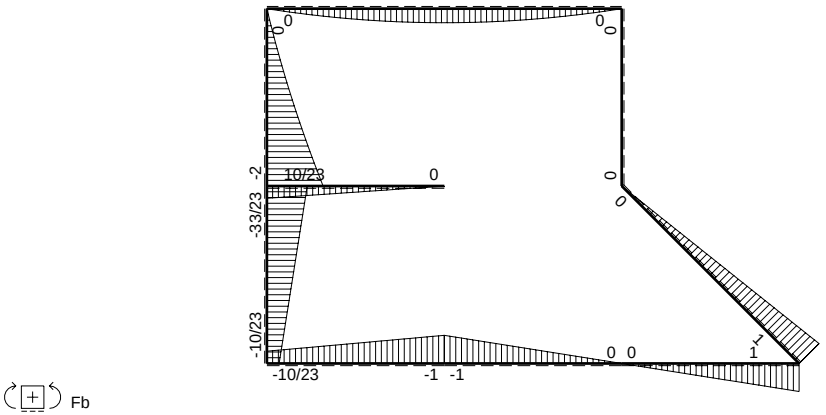
0
0
0
0
-2
10/23
0
-33/23
0
0
-10/23
0 0
1
-10/23
-1 -1
Fb

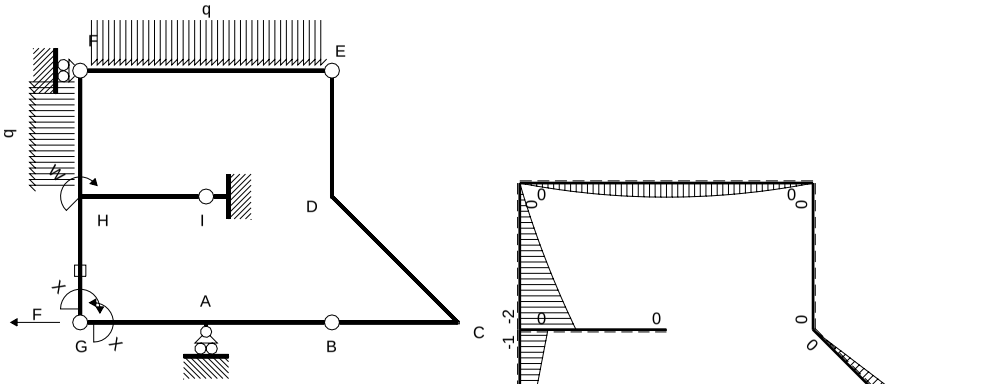

M_0 flessione da carichi assegnati

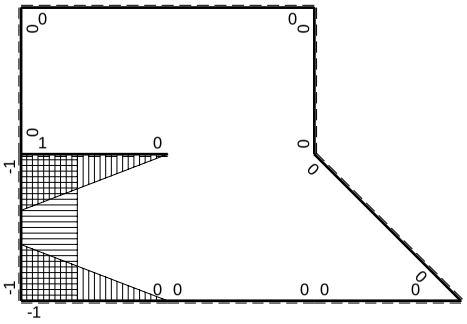

M_x flessione da iperstatica X=1

Quadro contributi PLV per iperstatica $X=W_{GA}$

→	$M_x(x)$	$M_0(x)$	M_xM_0	M_xM_x	$\int M_xM_0/EJdx$	$\int XM_xM_x/EJdx$
AB b	0	-Fb+Fx	0	0	0	0
BA b	0	Fx	0	0		
BC b	0	Fx	0	0	0	0
CB b	0	-Fb+Fx	0	0		
CD √2b	0	Fb-√2/2Fx	0	0	0	0
DE b	0	0	0	0	0	0
ED b	0	0	0	0		
EF 2b	0	$-Fx+1/2qx^2$	0	0	0	0
FE 2b	0	$Fx-1/2qx^2$	0	0		
GA b	-1+x/b	-Fx	$Fx-Fx^2/b$	$1-2x/b+x^2/b^2$	$1/6Fb^2/EJ$	1/3Xb/EJ
AG b	x/b	Fb-Fx	$Fx-Fx^2/b$	x^2/b^2		
FH b	0	$-3/2Fx-1/2qx^2$	0	0	0	0
HF b	0	$2Fb-5/2Fx+1/2qx^2$	0	0		
HI b	1-x/b	0	0	$1-2x/b+x^2/b^2$	0	1/3Xb/EJ
IH b	-x/b	0	0	x^2/b^2		
HG b	-1	-Fb+Fx	Fb-Fx	1	$1/2Fb^2/EJ$	Xb/EJ
GH b	1	Fx	Fx	1		
HG	elongazione asta $N_{1HG}\varepsilon_{HG}L_{HG}$				$-Fb^2/EJ$	
A	molla nodo $-V_{1A}(V_{0A}+XV_{1A})/k_A$				$-1/2Fb^2/EJ$	1/4Xb/EJ
	totali				$-5/6Fb^2/EJ$	23/12Xb/EJ
	iperstatica $X=W_{GA}$				10/23Fb	

Sviluppi di calcolo iperstatica

$L^{XX}_{GA} = \int_o^b (1 - 2\,x/b + x^2/b^2)\ 1/EJ\ dx = [\ x - x^2/b + 1/3\ x^3/b^2\ ]_o^b\ 1/EJ$

$= (\ b - b + 1/3\ b\ )\ 1/EJ\ = 1/3\ b/EJ$

$L^{XX}_{AG} = \int_o^b (\ x^2/b^2\ )\ 1/EJ\ dx = [1/3\ x^3/b^2\ ]_o^b\ 1/EJ$

$= (1/3\ b\ )\ 1/EJ\ = 1/3\ b/EJ$

$L^{XX}_{HI} = \int_o^b (1 - 2\,x/b + x^2/b^2)\ 1/EJ\ dx = [\ x - x^2/b + 1/3\ x^3/b^2\ ]_o^b\ 1/EJ$

$= (\ b - b + 1/3\ b\ )\ 1/EJ\ = 1/3\ b/EJ$

$L^{XX}_{IH} = \int_o^b (\ x^2/b^2\ )\ 1/EJ\ dx = [1/3\ x^3/b^2\ ]_o^b\ 1/EJ$

$= (1/3\ b\ )\ 1/EJ\ = 1/3\ b/EJ$

$L^{XX}_{HG} = \int_o^b (1)\ 1/EJ\ dx = [\ x\ ]_o^b\ 1/EJ$

$= (\ b\ )\ 1/EJ\ =\ b/EJ$

$L^{XX}_{GH} = \int_o^b (1)\ 1/EJ\ dx = [\ x\ ]_o^b\ 1/EJ$

$= (\ b\ )\ 1/EJ\ =\ b/EJ$

$L^{Xo}_{GA} = \int_o^b (\ x/b - x^2/b^2\ )\ Fb\ 1/EJ\ dx = [1/2\ x^2/b - 1/3\ x^3/b^2\ ]_o^b\ Fb\ 1/EJ$

$= (1/2\ b - 1/3\ b\ )\ Fb\ 1/EJ\ = 1/6\ Fb^2/EJ$

$L^{Xo}_{AG} = \int_o^b (\ x/b - x^2/b^2\ )\ Fb\ 1/EJ\ dx = [1/2\ x^2/b - 1/3\ x^3/b^2\ ]_o^b\ Fb\ 1/EJ$

$= (1/2\ b - 1/3\ b\ )\ Fb\ 1/EJ\ = 1/6\ Fb^2/EJ$

$L^{Xo}_{HG} = \int_o^b (1 - x/b\ )\ Fb\ 1/EJ\ dx - 1\ \ (-1)\ \ (-1)\ \ Fb^2/EJ = [\ x - 1/2\ x^2/b\ ]_o^b\ Fb\ 1/EJ\ -\ 1\ \ (-1)\ \ (-1)\ \ Fb^2/EJ$

$= (\ b - 1/2\ b\ )\ Fb\ 1/EJ\ -\ 1\ \ (-1)\ \ (-1)\ \ Fb^2/EJ = -1/2\ \ Fb^2/EJ$

$L^{Xo}_{GH} = \int_o^b (\ x/b\ )\ Fb\ 1/EJ\ dx - 1\ \ (-1)\ \ (-1)\ \ Fb^2/EJ = [1/2\ x^2/b\ ]_o^b\ Fb\ 1/EJ\ -\ 1\ \ (-1)\ \ (-1)\ \ Fb^2/EJ$

$= (1/2\ b\ )\ Fb\ 1/EJ\ -\ 1\ \ (-1)\ \ (-1)\ \ Fb^2/EJ = -1/2\ \ Fb^2/EJ$

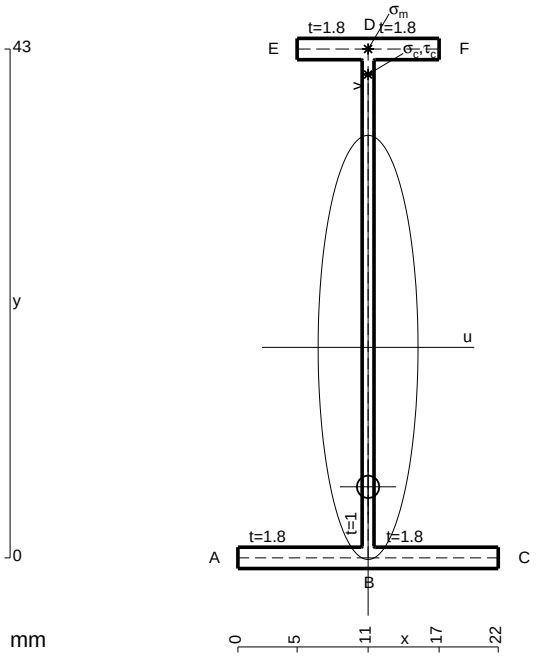

A = 104.2 mm^2
J_u = 33478. mm^4
J_v = 1856. mm^4
J_t = 80.43 mm^4
y_o = -11.78 mm
y_g = 17.79 mm
N = -230. N
T_y = -575. N
M_x = -285200. Nmm
x_m = 11. mm
y_m = 43. mm
v_m = 25.21 mm
$\sigma_m = N/A - Mv/J_u$ = 212.6 N/mm^2
y_c = 2. mm
u_c = -11. mm
v_c = -15.79 mm
$\sigma_c = N/A - Mv/J_u$ = 212.6 N/mm^2
$\tau_c = TS^*/tJ_u$ = 9.354 N/mm^2
$\tau_g = TS^*/tJ_u$ = 9.354 N/mm^2
t_c = 230. mm
$\sigma_o = \sqrt{\sigma^2 + 3\tau^2}$ = 213.2 N/mm^2

ESΣ05.xxxx.127

@ Adolfo Zavelani Rossi, Politecnico di Milano, vers.27.03.13 01.12.25

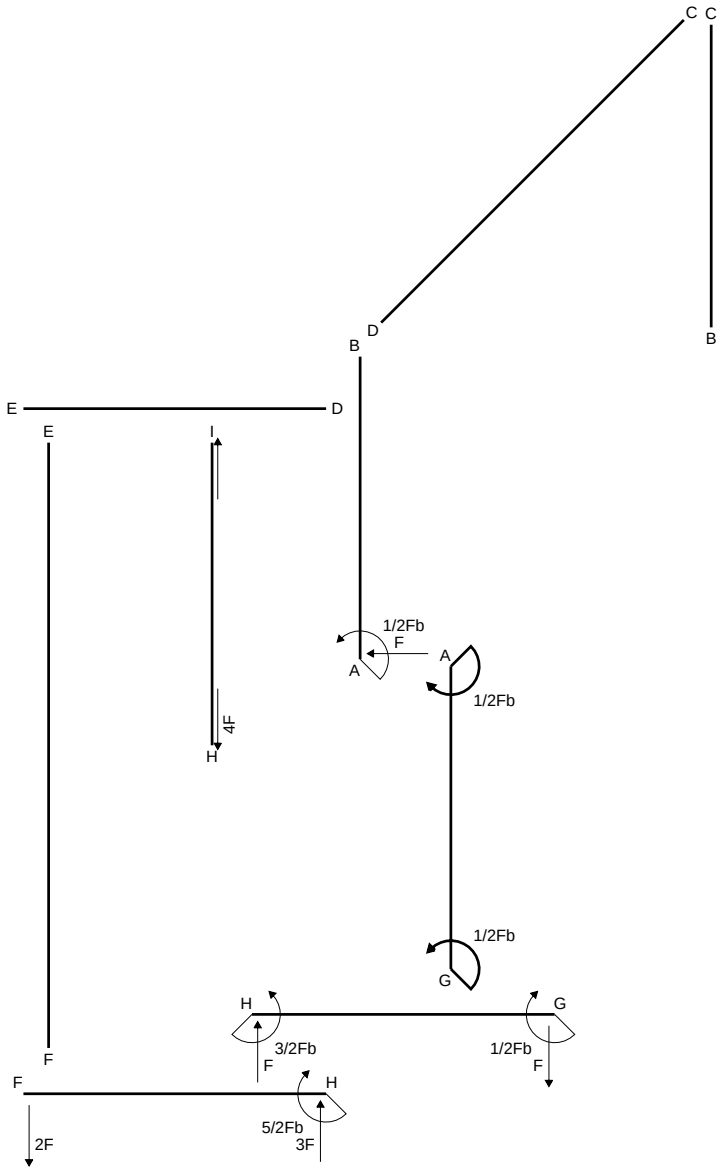
C C
D
B
B
E
D
E
I
1/2Fb
F
A
A
1/2Fb
4F
H
1/2Fb
G
H
G
3/2Fb
F
1/2Fb
F
F
H
5/2Fb
3F
F
2F

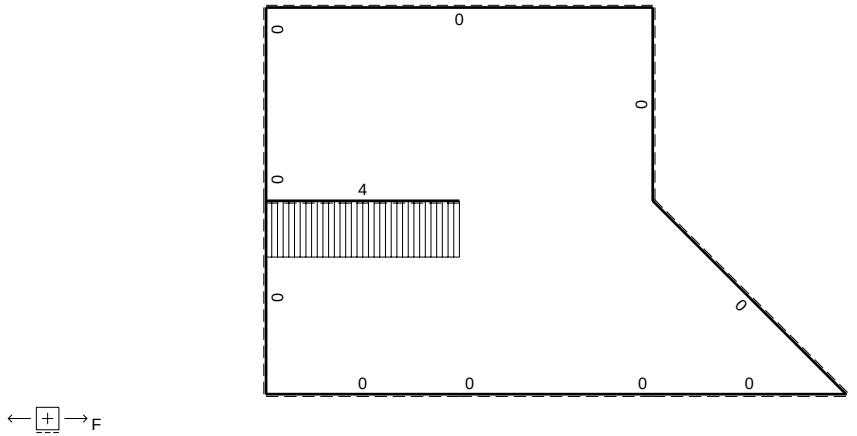
0
0
0
0
4
0
0
0
0
0
0
0
F

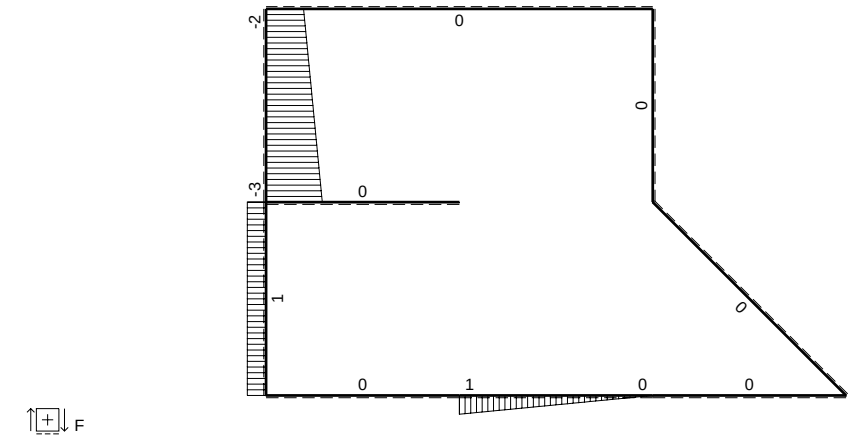
-2
0
0
-3
0
1
0
0
1
0
0
F

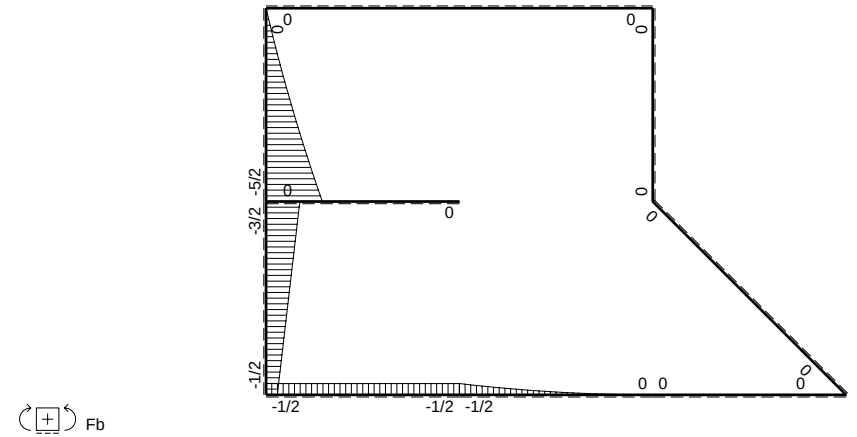
0
0
0
0
-5/2
-3/2
0
0
0
0
-1/2
0 0
0
-1/2
-1/2 -1/2
Fb

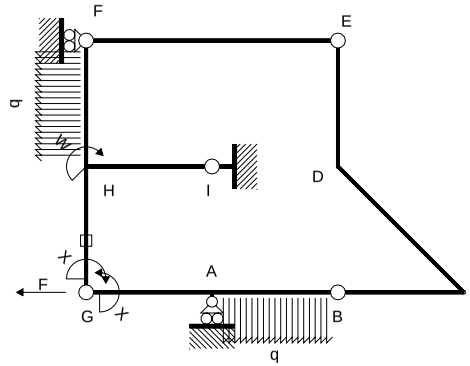

Schema di calcolo iperstatico

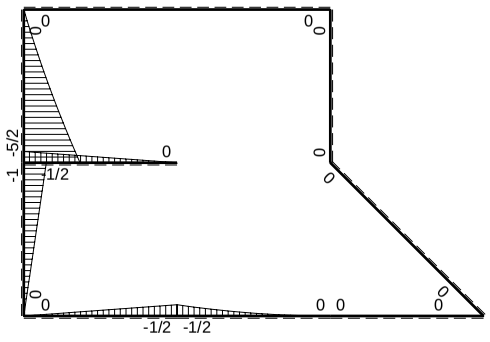

M_0 flessione da carichi assegnati

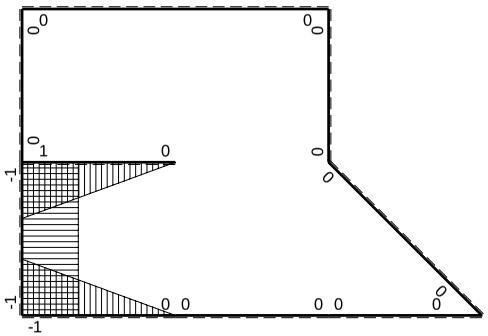

M_x flessione da iperstatica X=1

Quadro contributi PLV per iperstatica $X=W_{GA}$

→	$M_x(x)$	$M_0(x)$	M_xM_0	M_xM_x	$\int M_xM_0/EJdx$	$\int XM_xM_x/EJdx$
AB b	0	$-1/2Fb+Fx-1/2qx^2$	0	0	0	0
BA b	0	$1/2qx^2$	0	0		
BC b	0	0	0	0	0	0
CB b	0	0	0	0		
CD √2b	0	0	0	0	0	0
DE b	0	0	0	0	0	0
ED b	0	0	0	0		
EF 2b	0	0	0	0	0	0
FE 2b	0	0	0	0		
GA b	-1+x/b	-1/2Fx	$1/2Fx-1/2Fx^2/b$	$1-2x/b+x^2/b^2$	$1/12Fb^2/EJ$	1/3Xb/EJ
AG b	x/b	1/2Fb-1/2Fx	$1/2Fx-1/2Fx^2/b$	x^2/b^2		
FH b	0	$-2Fx-1/2qx^2$	0	0	0	0
HF b	0	$5/2Fb-3Fx+1/2qx^2$	0	0		
HI b	1-x/b	$-1/2Fb+1/2Fx$	$-1/2Fb+Fx-1/2Fx^2/b$	$1-2x/b+x^2/b^2$	$-1/6Fb^2/EJ$	1/3Xb/EJ
IH b	-x/b	1/2Fx	$-1/2Fx^2/b$	x^2/b^2		
HG b	-1	-Fb+Fx	Fb-Fx	1	$1/2Fb^2/EJ$	Xb/EJ
GH b	1	Fx	Fx	1		
HG	elongazione asta $N_{1HG}\varepsilon_{HG}L_{HG}$				$-Fb^2/EJ$	
A	molla nodo $-V_{1A}(V_{0A}+XV_{1A})/k_A$				$-3/8Fb^2/EJ$	1/4Xb/EJ
	totali				$-23/24Fb^2/EJ$	23/12Xb/EJ
	iperstatica $X=W_{GA}$				1/2Fb	

Sviluppi di calcolo iperstatica

$L^{XX}_{GA} = \int_o^b (1 - 2\,x/b + x^2/b^2)\ 1/EJ\ dx = [\ x - x^2/b + 1/3\ x^3/b^2\ ]_o^b\ 1/EJ$

$= (\ b - b + 1/3\ b\ )\ 1/EJ\ = 1/3\ b/EJ$

$L^{XX}_{AG} = \int_o^b (\ x^2/b^2\ )\ 1/EJ\ dx = [1/3\ x^3/b^2\ ]_o^b\ 1/EJ$

$= (1/3\ b\ )\ 1/EJ\ = 1/3\ b/EJ$

$L^{XX}_{HI} = \int_o^b (1 - 2\,x/b + x^2/b^2)\ 1/EJ\ dx = [\ x - x^2/b + 1/3\ x^3/b^2\ ]_o^b\ 1/EJ$

$= (\ b - b + 1/3\ b\ )\ 1/EJ\ = 1/3\ b/EJ$

$L^{XX}_{IH} = \int_o^b (\ x^2/b^2\ )\ 1/EJ\ dx = [1/3\ x^3/b^2\ ]_o^b\ 1/EJ$

$= (1/3\ b\ )\ 1/EJ\ = 1/3\ b/EJ$

$L^{XX}_{HG} = \int_o^b (1\ )\ 1/EJ\ dx = [\ x\ ]_o^b\ 1/EJ$

$= (\ b\ )\ 1/EJ\ =\ b/EJ$

$L^{XX}_{GH} = \int_o^b (1\ )\ 1/EJ\ dx = [\ x\ ]_o^b\ 1/EJ$

$= (\ b\ )\ 1/EJ\ =\ b/EJ$

$L^{Xo}_{GA} = \int_o^b (1/2\ x/b - 1/2\ x^2/b^2\ )\ Fb\ 1/EJ\ dx = [1/4\ x^2/b - 1/6\ x^3/b^2\ ]_o^b\ Fb\ 1/EJ$

$= (1/4\ b - 1/6\ b\ )\ Fb\ 1/EJ\ = 1/12\ Fb^2/EJ$

$L^{Xo}_{AG} = \int_o^b (1/2\ x/b - 1/2\ x^2/b^2\ )\ Fb\ 1/EJ\ dx = [1/4\ x^2/b - 1/6\ x^3/b^2\ ]_o^b\ Fb\ 1/EJ$

$= (1/4\ b - 1/6\ b\ )\ Fb\ 1/EJ\ = 1/12\ Fb^2/EJ$

$L^{Xo}_{HI} = \int_o^b (-1/2 + x/b - 1/2\ x^2/b^2\ )\ Fb\ 1/EJ\ dx = [-1/2\ x + 1/2\ x^2/b - 1/6\ x^3/b^2\ ]_o^b\ Fb\ 1/EJ$

$= (-1/2\ b + 1/2\ b - 1/6\ b\ )\ Fb\ 1/EJ\ = -1/6\ Fb^2/EJ$

$L^{Xo}_{IH} = \int_o^b (-1/2\ x^2/b^2\ )\ Fb\ 1/EJ\ dx = [-1/6\ x^3/b^2\ ]_o^b\ Fb\ 1/EJ$

$= (-1/6\ b\ )\ Fb\ 1/EJ\ = -1/6\ Fb^2/EJ$

$L^{Xo}_{HG} = \int_o^b (1 - x/b\ )\ Fb\ 1/EJ\ dx - 1\ \ (-1)\ \ (-1)\ \ Fb^2/EJ = [\ x - 1/2\ x^2/b\ ]_o^b\ Fb\ 1/EJ\ \ - 1\ \ (-1)\ \ (-1)\ \ Fb^2/EJ$

$= (\ b - 1/2\ b\ )\ Fb\ 1/EJ\ \ - 1\ \ (-1)\ \ (-1)\ \ Fb^2/EJ = -1/2\ \ Fb^2/EJ$

$L^{Xo}_{GH} = \int_o^b (\ x/b\ )\ Fb\ 1/EJ\ dx - 1\ \ (-1)\ \ (-1)\ \ Fb^2/EJ = [1/2\ x^2/b\ ]_o^b\ Fb\ 1/EJ\ \ - 1\ \ (-1)\ \ (-1)\ \ Fb^2/EJ$

$= (1/2\ b\ )\ Fb\ 1/EJ\ \ - 1\ \ (-1)\ \ (-1)\ \ Fb^2/EJ = -1/2\ \ Fb^2/EJ$

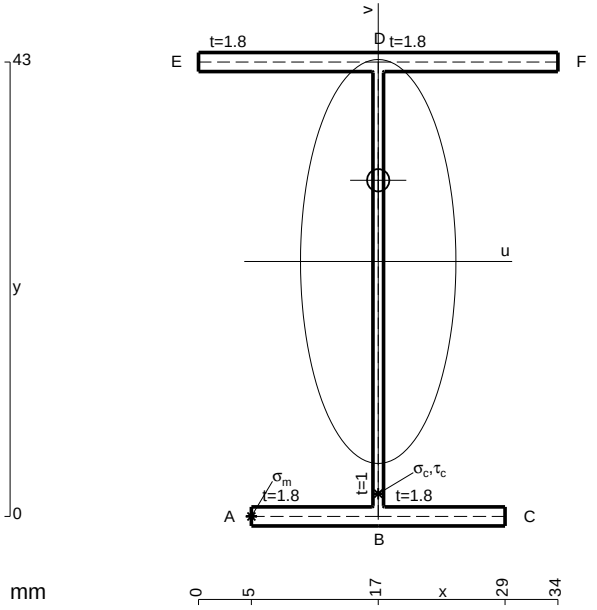

A = 147.4 mm^2
J_u = 53868. mm^4
J_v = 7969. mm^4
J_t = 127.1 mm^4
y_o = 7.686 mm
y_g = 24.13 mm
T_y = -930. N
M_x = -511500. Nmm
x_m = 5. mm
u_m = -12. mm
v_m = -24.13 mm
$\sigma_m = -Mv/J_u$ = -229.1 N/mm^2
x_c = 17. mm
v_c = -24.13 mm
$\sigma_c = -Mv/J_u$ = -229.1 N/mm^2
$\tau_c = TS^*/tJ_u$ = 17.99 N/mm^2
$\tau_g = TS^*/tJ_u$ = 17.99 N/mm^2
t_c = 310. mm
$\sigma_o = \sqrt{\sigma^2 + 3\tau^2}$ = 231.2 N/mm^2

ESΣ05.xxxx.128

@ Adolfo Zavelani Rossi, Politecnico di Milano, vers.27.03.13 01.12.25

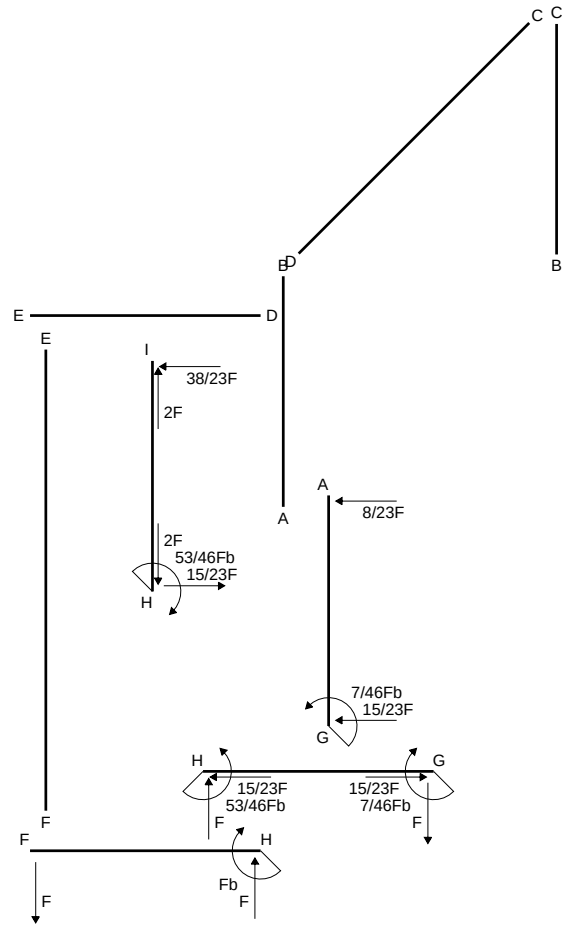
C C
B D
B
E D
E
I
38/23F
2F
A
A
8/23F
2F
53/46Fb
15/23F
H
7/46Fb
15/23F
G
H
G
15/23F
53/46Fb
15/23F
7/46Fb
F
F
F
H
Fb
F
F

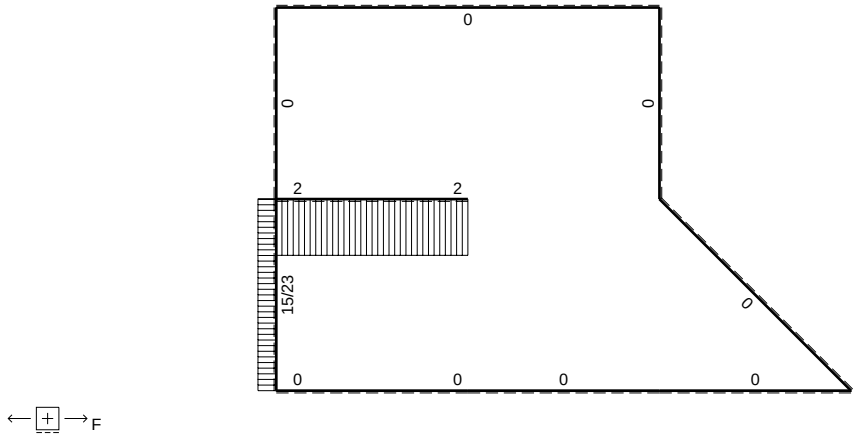
0
0
0
2
2
15/23
0
0
0
0
0
F

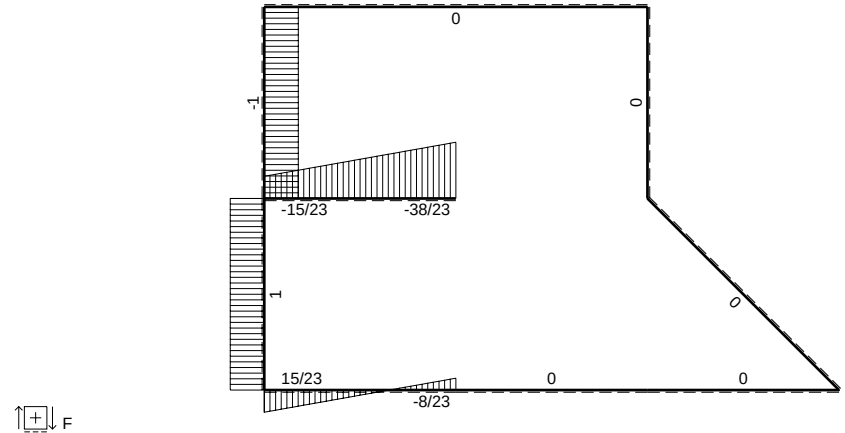
0
-1
0
-15/23
-38/23
1
0
15/23
0
0
-8/23
F

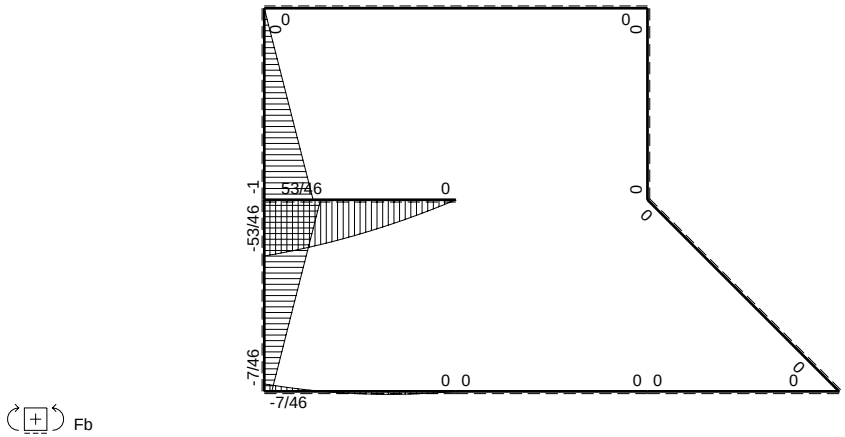
0
0
0
0
-1
53/46
0
-53/46
0
0
0
-7/46
0 0
0 0
0
-7/46
Fb

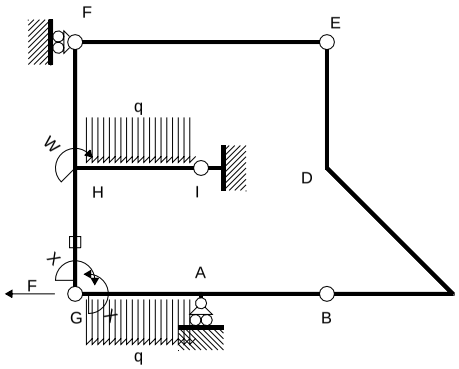

Schema di calcolo iperstatico

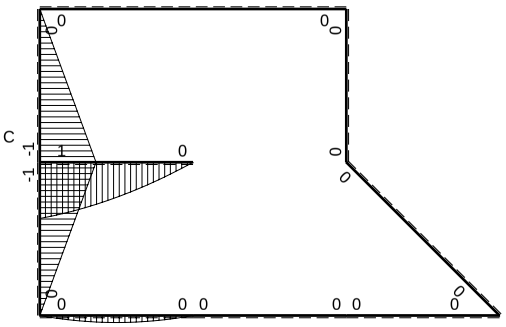

M_0 flessione da carichi assegnati

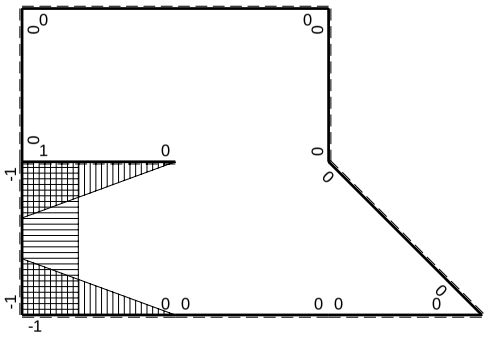

M_x flessione da iperstatica X=1

Quadro contributi PLV per iperstatica $X=W_{GA}$

→	$M_x(x)$	$M_0(x)$	M_xM_0	M_xM_x	$\int M_xM_0/EJdx$	$\int XM_xM_x/EJdx$
AB b	0	0	0	0	0	0
BA b	0	0	0	0		
BC b	0	0	0	0	0	0
CB b	0	0	0	0		
CD √2b	0	0	0	0	0	0
DE b	0	0	0	0	0	0
ED b	0	0	0	0		
EF 2b	0	0	0	0	0	0
FE 2b	0	0	0	0		
GA b	-1+x/b	$1/2Fx-1/2qx^2$	$-1/2Fx+Fx^2/b-1/2qx^3/b$	$1-2x/b+x^2/b^2$	$-1/24Fb^2/EJ$	$1/3Xb/EJ$
AG b	x/b	$-1/2Fx+1/2qx^2$	$-1/2Fx^2/b+1/2qx^3/b$	x^2/b^2		
FH b	0	-Fx	0	0	0	0
HF b	0	Fb-Fx	0	0		
HI b	1-x/b	$Fb-1/2Fx-1/2qx^2$	$Fb-3/2Fx+1/2qx^3/b$	$1-2x/b+x^2/b^2$	$3/8Fb^2/EJ$	$1/3Xb/EJ$
IH b	-x/b	$-3/2Fx+1/2qx^2$	$3/2Fx^2/b-1/2qx^3/b$	x^2/b^2		
HG b	-1	-Fb+Fx	Fb-Fx	1	$1/2Fb^2/EJ$	Xb/EJ
GH b	1	Fx	Fx	1		
HG	elongazione asta $N_{1HG}\varepsilon_{HG}L_{HG}$				$-Fb^2/EJ$	
A	molla nodo $-V_{1A}(V_{0A}+XV_{1A})/k_A$				$-1/8Fb^2/EJ$	$1/4Xb/EJ$
	totali				$-7/24Fb^2/EJ$	$23/12Xb/EJ$
	iperstatica $X=W_{GA}$				7/46Fb	

Sviluppi di calcolo iperstatica

$L^{XX}_{GA} = \int_o^b (1 - 2\,x/b + x^2/b^2)\ 1/EJ\ dx = [\,x - x^2/b + 1/3\,x^3/b^2\,]_o^b\ 1/EJ$

$= (\,b - b + 1/3\,b\,)\ 1/EJ = 1/3\ b/EJ$

$L^{XX}_{AG} = \int_o^b (\,x^2/b^2\,)\ 1/EJ\ dx = [1/3\,x^3/b^2\,]_o^b\ 1/EJ$

$= (1/3\,b\,)\ 1/EJ = 1/3\ b/EJ$

$L^{XX}_{HI} = \int_o^b (1 - 2\,x/b + x^2/b^2)\ 1/EJ\ dx = [\,x - x^2/b + 1/3\,x^3/b^2\,]_o^b\ 1/EJ$

$= (\,b - b + 1/3\,b\,)\ 1/EJ = 1/3\ b/EJ$

$L^{XX}_{IH} = \int_o^b (\,x^2/b^2\,)\ 1/EJ\ dx = [1/3\,x^3/b^2\,]_o^b\ 1/EJ$

$= (1/3\,b\,)\ 1/EJ = 1/3\ b/EJ$

$L^{XX}_{HG} = \int_o^b (1)\ 1/EJ\ dx = [\,x\,]_o^b\ 1/EJ$

$= (\,b\,)\ 1/EJ = b/EJ$

$L^{XX}_{GH} = \int_o^b (1)\ 1/EJ\ dx = [\,x\,]_o^b\ 1/EJ$

$= (\,b\,)\ 1/EJ = b/EJ$

$L^{Xo}_{GA} = \int_o^b (-1/2\,x/b + x^2/b^2 - 1/2\,x^3/b^3)\ Fb\ 1/EJ\ dx = [-1/4\,x^2/b + 1/3\,x^3/b^2 - 1/8\,x^4/b^3\,]_o^b\ Fb\ 1/EJ$

$= (-1/4\,b + 1/3\,b - 1/8\,b\,)\ Fb\ 1/EJ = -1/24\ Fb^2/EJ$

$L^{Xo}_{AG} = \int_o^b (-1/2\,x^2/b^2 + 1/2\,x^3/b^3)\ Fb\ 1/EJ\ dx = [-1/6\,x^3/b^2 + 1/8\,x^4/b^3\,]_o^b\ Fb\ 1/EJ$

$= (-1/6\,b + 1/8\,b\,)\ Fb\ 1/EJ = -1/24\ Fb^2/EJ$

$L^{Xo}_{HI} = \int_o^b (1 - 3/2\,x/b + 1/2\,x^3/b^3)\ Fb\ 1/EJ\ dx = [\,x - 3/4\,x^2/b + 1/8\,x^4/b^3\,]_o^b\ Fb\ 1/EJ$

$= (\,b - 3/4\,b + 1/8\,b\,)\ Fb\ 1/EJ = 3/8\ Fb^2/EJ$

$L^{Xo}_{IH} = \int_o^b (3/2\,x^2/b^2 - 1/2\,x^3/b^3)\ Fb\ 1/EJ\ dx = [1/2\,x^3/b^2 - 1/8\,x^4/b^3\,]_o^b\ Fb\ 1/EJ$

$= (1/2\,b - 1/8\,b\,)\ Fb\ 1/EJ = 3/8\ Fb^2/EJ$

$L^{Xo}_{HG} = \int_o^b (1 - x/b\,)\ Fb\ 1/EJ\ dx - 1\ \ (-1)\ \ (-1)\ \ Fb^2/EJ = [\,x - 1/2\,x^2/b\,]_o^b\ Fb\ 1/EJ\ \ - 1\ \ (-1)\ \ (-1)\ \ Fb^2/EJ$

$= (\,b - 1/2\,b\,)\ Fb\ 1/EJ\ \ - 1\ \ (-1)\ \ (-1)\ \ Fb^2/EJ = -1/2\ \ Fb^2/EJ$

$L^{Xo}_{GH} = \int_o^b (\,x/b\,)\ Fb\ 1/EJ\ dx - 1\ \ (-1)\ \ (-1)\ \ Fb^2/EJ = [1/2\,x^2/b\,]_o^b\ Fb\ 1/EJ\ \ - 1\ \ (-1)\ \ (-1)\ \ Fb^2/EJ$

$= (1/2\,b\,)\ Fb\ 1/EJ\ \ - 1\ \ (-1)\ \ (-1)\ \ Fb^2/EJ = -1/2\ \ Fb^2/EJ$

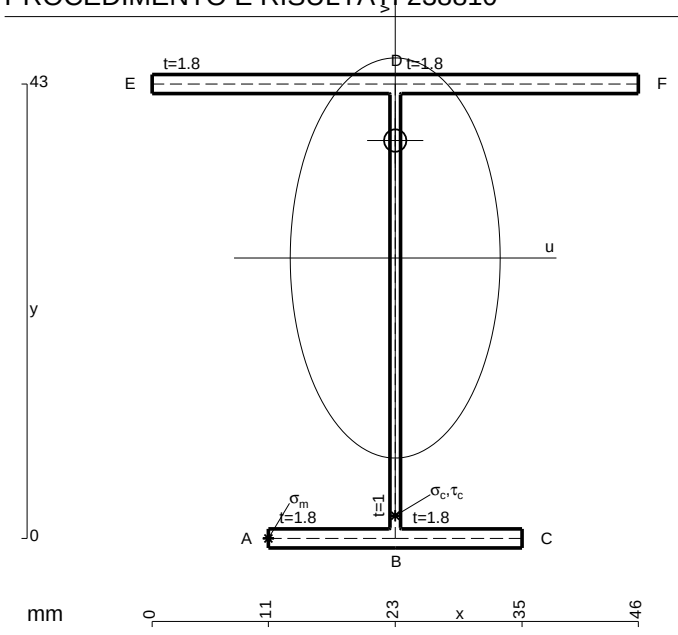

A = 169. mm^2
J_u = 60580. mm^4
J_v = 16674. mm^4
J_t = 150.4 mm^4
y_o = 11.11 mm
y_g = 26.54 mm
T_y = -780. N
M_x = -546000. Nmm
x_m = 11. mm
u_m = -12. mm
v_m = -26.54 mm
$\sigma_m = -Mv/J_u$ = -239.2 N/mm^2
x_c = 23. mm
v_c = -26.54 mm
$\sigma_c = -Mv/J_u$ = -239.2 N/mm^2
$\tau_c = TS^*/tJ_u$ = 14.76 N/mm^2
$\tau_g = TS^*/tJ_u$ = 14.76 N/mm^2
t_c = 780. mm
$\sigma_o = \sqrt{\sigma^2 + 3\tau^2}$ = 240.5 N/mm^2

ESΣ05.xxxx.129

@ Adolfo Zavelani Rossi, Politecnico di Milano, vers.27.03.13 01.12.25

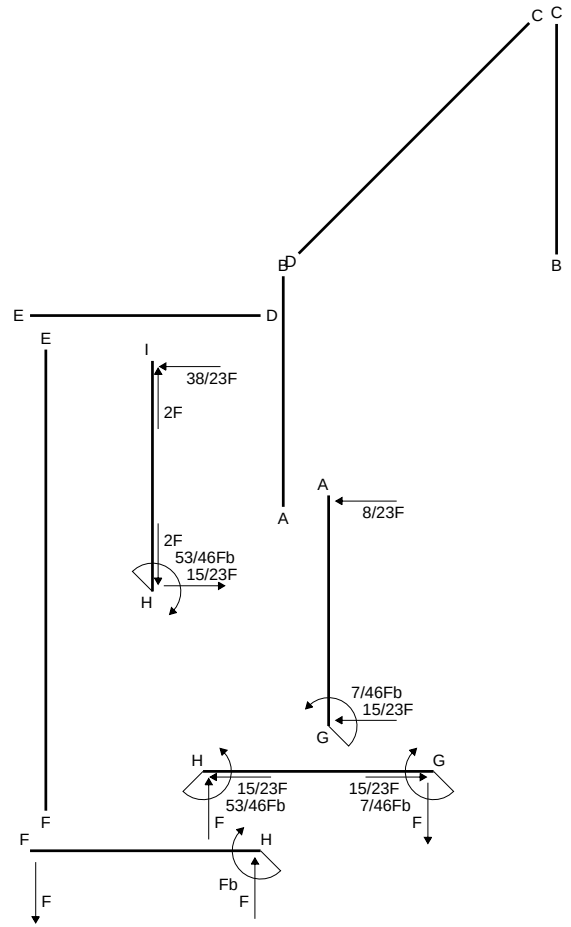
C C
B D
B
E D
E
I
38/23F
2F
A
A
8/23F
2F
53/46Fb
15/23F
H
7/46Fb
15/23F
G
H
G
15/23F
53/46Fb
15/23F
7/46Fb
F
F
F
H
Fb
F
F

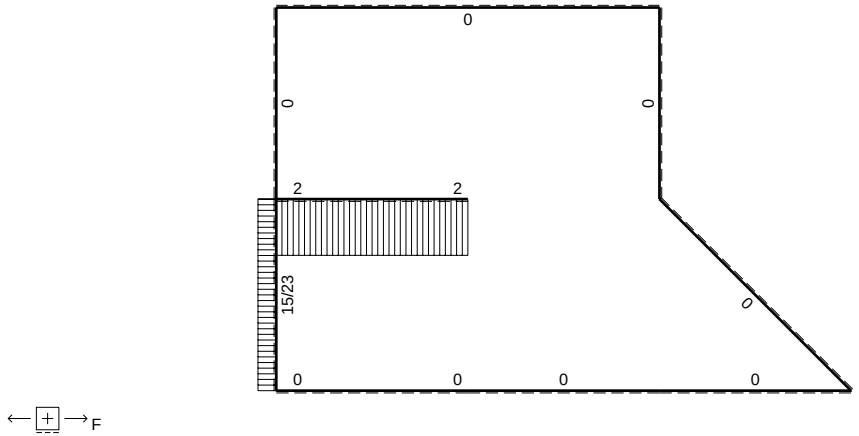
0
0
0
2
2
15/23
0
0
0
0
0
F

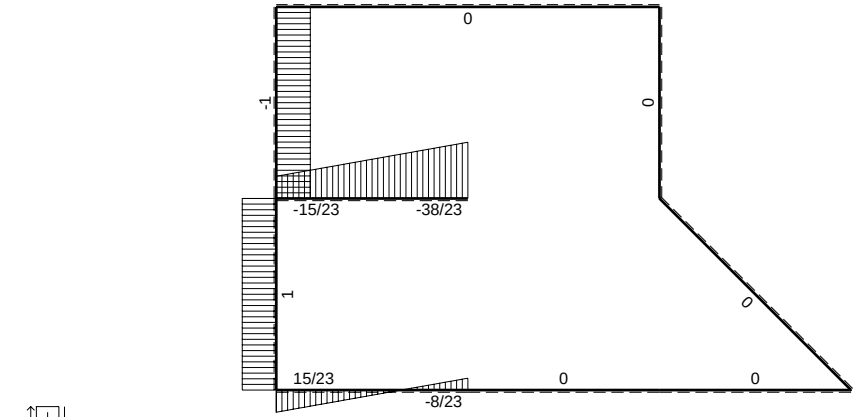
0
-1
0
-15/23
-38/23
1
0
15/23
0
0
-8/23
F

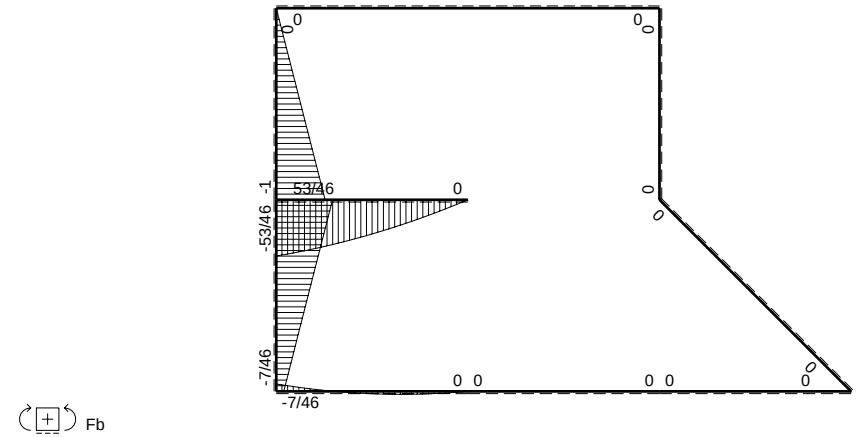
0
0
0
0
-1
53/46
0
-53/46
0
0
-7/46
0 0
0 0
0
-7/46
Fb

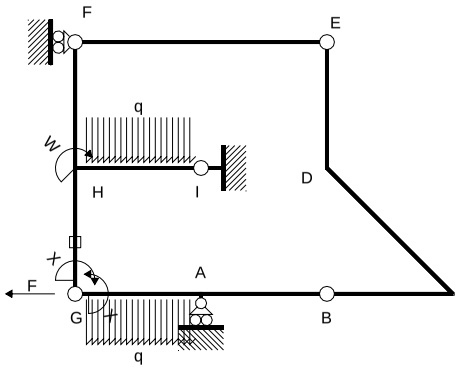

Schema di calcolo iperstatico

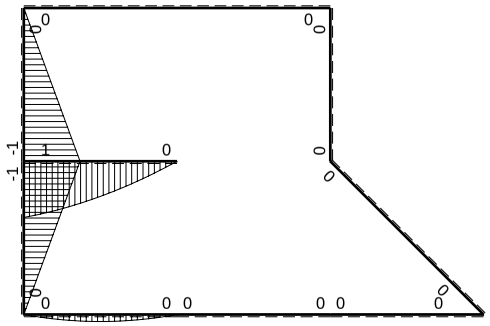

M_0 flessione da carichi assegnati

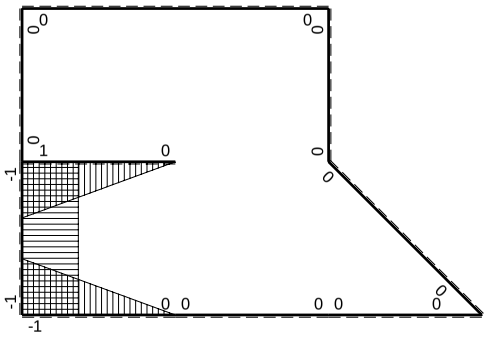

M_x flessione da iperstatica X=1

Quadro contributi PLV per iperstatica $X=W_{GA}$

→	$M_x(x)$	$M_0(x)$	M_xM_0	M_xM_x	$\int M_xM_0/EJdx$	$\int XM_xM_x/EJdx$
AB b	0	0	0	0	0	0
BA b	0	0	0	0		
BC b	0	0	0	0	0	0
CB b	0	0	0	0		
CD √2b	0	0	0	0	0	0
DE b	0	0	0	0	0	0
ED b	0	0	0	0		
EF 2b	0	0	0	0	0	0
FE 2b	0	0	0	0		
GA b	-1+x/b	$1/2Fx-1/2qx^2$	$-1/2Fx+Fx^2/b-1/2qx^3/b$	$1-2x/b+x^2/b^2$	$-1/24Fb^2/EJ$	$1/3Xb/EJ$
AG b	x/b	$-1/2Fx+1/2qx^2$	$-1/2Fx^2/b+1/2qx^3/b$	x^2/b^2		
FH b	0	-Fx	0	0	0	0
HF b	0	Fb-Fx	0	0		
HI b	1-x/b	$Fb-1/2Fx-1/2qx^2$	$Fb-3/2Fx+1/2qx^3/b$	$1-2x/b+x^2/b^2$	$3/8Fb^2/EJ$	$1/3Xb/EJ$
IH b	-x/b	$-3/2Fx+1/2qx^2$	$3/2Fx^2/b-1/2qx^3/b$	x^2/b^2		
HG b	-1	-Fb+Fx	Fb-Fx	1	$1/2Fb^2/EJ$	Xb/EJ
GH b	1	Fx	Fx	1		
HG	elongazione asta $N_{1HG}\varepsilon_{HG}L_{HG}$				$-Fb^2/EJ$	
A	molla nodo $-V_{1A}(V_{0A}+XV_{1A})/k_A$				$-1/8Fb^2/EJ$	$1/4Xb/EJ$
	totali				$-7/24Fb^2/EJ$	$23/12Xb/EJ$
	iperstatica $X=W_{GA}$				7/46Fb	

Sviluppi di calcolo iperstatica

$L^{XX}_{GA} = \int_o^b (1 - 2\,x/b + x^2/b^2)\ 1/EJ\ dx = [\ x - x^2/b + 1/3\ x^3/b^2\ ]_o^b\ 1/EJ$

$= (\ b - b + 1/3\ b\ )\ 1/EJ\ = 1/3\ b/EJ$

$L^{XX}_{AG} = \int_o^b (\ x^2/b^2\ )\ 1/EJ\ dx = [1/3\ x^3/b^2\ ]_o^b\ 1/EJ$

$= (1/3\ b\ )\ 1/EJ\ = 1/3\ b/EJ$

$L^{XX}_{HI} = \int_o^b (1 - 2\,x/b + x^2/b^2)\ 1/EJ\ dx = [\ x - x^2/b + 1/3\ x^3/b^2\ ]_o^b\ 1/EJ$

$= (\ b - b + 1/3\ b\ )\ 1/EJ\ = 1/3\ b/EJ$

$L^{XX}_{IH} = \int_o^b (\ x^2/b^2\ )\ 1/EJ\ dx = [1/3\ x^3/b^2\ ]_o^b\ 1/EJ$

$= (1/3\ b\ )\ 1/EJ\ = 1/3\ b/EJ$

$L^{XX}_{HG} = \int_o^b (1\ )\ 1/EJ\ dx = [\ x\ ]_o^b\ 1/EJ$

$= (\ b\ )\ 1/EJ\ =\ b/EJ$

$L^{XX}_{GH} = \int_o^b (1\ )\ 1/EJ\ dx = [\ x\ ]_o^b\ 1/EJ$

$= (\ b\ )\ 1/EJ\ =\ b/EJ$

$L^{Xo}_{GA} = \int_o^b (-1/2\ x/b + x^2/b^2 - 1/2\ x^3/b^3\ )\ Fb\ 1/EJ\ dx = [-1/4\ x^2/b + 1/3\ x^3/b^2 - 1/8\ x^4/b^3\ ]_o^b\ Fb\ 1/EJ$

$= (-1/4\ b + 1/3\ b - 1/8\ b\ )\ Fb\ 1/EJ\ = -1/24\ \ Fb^2/EJ$

$L^{Xo}_{AG} = \int_o^b (-1/2\ x^2/b^2 + 1/2\ x^3/b^3\ )\ Fb\ 1/EJ\ dx = [-1/6\ x^3/b^2 + 1/8\ x^4/b^3\ ]_o^b\ Fb\ 1/EJ$

$= (-1/6\ b + 1/8\ b\ )\ Fb\ 1/EJ\ = -1/24\ \ Fb^2/EJ$

$L^{Xo}_{HI} = \int_o^b (1 - 3/2\ x/b + 1/2\ x^3/b^3\ )\ Fb\ 1/EJ\ dx = [\ x - 3/4\ x^2/b + 1/8\ x^4/b^3\ ]_o^b\ Fb\ 1/EJ$

$= (\ b - 3/4\ b + 1/8\ b\ )\ Fb\ 1/EJ\ = 3/8\ \ Fb^2/EJ$

$L^{Xo}_{IH} = \int_o^b (3/2\ x^2/b^2 - 1/2\ x^3/b^3\ )\ Fb\ 1/EJ\ dx = [1/2\ x^3/b^2 - 1/8\ x^4/b^3\ ]_o^b\ Fb\ 1/EJ$

$= (1/2\ b - 1/8\ b\ )\ Fb\ 1/EJ\ = 3/8\ \ Fb^2/EJ$

$L^{Xo}_{HG} = \int_o^b (1 - x/b\ )\ Fb\ 1/EJ\ dx - 1\ \ (-1)\ \ (-1)\ \ Fb^2/EJ = [\ x - 1/2\ x^2/b\ ]_o^b\ Fb\ 1/EJ\ \ - 1\ \ (-1)\ \ (-1)\ \ Fb^2/EJ$

$= (\ b - 1/2\ b\ )\ Fb\ 1/EJ\ \ - 1\ \ (-1)\ \ (-1)\ \ Fb^2/EJ = -1/2\ \ Fb^2/EJ$

$L^{Xo}_{GH} = \int_o^b (\ x/b\ )\ Fb\ 1/EJ\ dx - 1\ \ (-1)\ \ (-1)\ \ Fb^2/EJ = [1/2\ x^2/b\ ]_o^b\ Fb\ 1/EJ\ \ - 1\ \ (-1)\ \ (-1)\ \ Fb^2/EJ$

$= (1/2\ b\ )\ Fb\ 1/EJ\ \ - 1\ \ (-1)\ \ (-1)\ \ Fb^2/EJ = -1/2\ \ Fb^2/EJ$

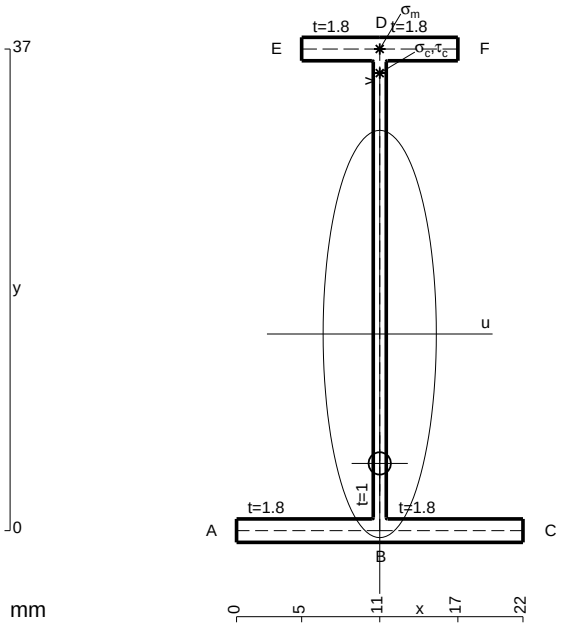

A = 98.2 mm^2
J_u = 24038. mm^4
J_v = 1856. mm^4
J_t = 78.43 mm^4
y_o = -9.943 mm
y_g = 15.11 mm
T_y = -700. N
M_x = -217000. Nmm
x_m = 11. mm
y_m = 37. mm
v_m = 21.89 mm
$\sigma_m = -Mv/J_u$ = 197.6 N/mm^2
y_c = 2. mm
u_c = -11. mm
v_c = -13.11 mm
$\sigma_c = -Mv/J_u$ = 197.6 N/mm^2
$\tau_c = TS^*/tJ_u$ = 13.77 N/mm^2
$\tau_g = TS^*/tJ_u$ = 13.77 N/mm^2
t_c = 700. mm
$\sigma_o = \sqrt{\sigma^2 + 3\tau^2}$ = 199.1 N/mm^2

ESΣ05.xxxx.130

@ Adolfo Zavelani Rossi, Politecnico di Milano, vers.27.03.13 01.12.25

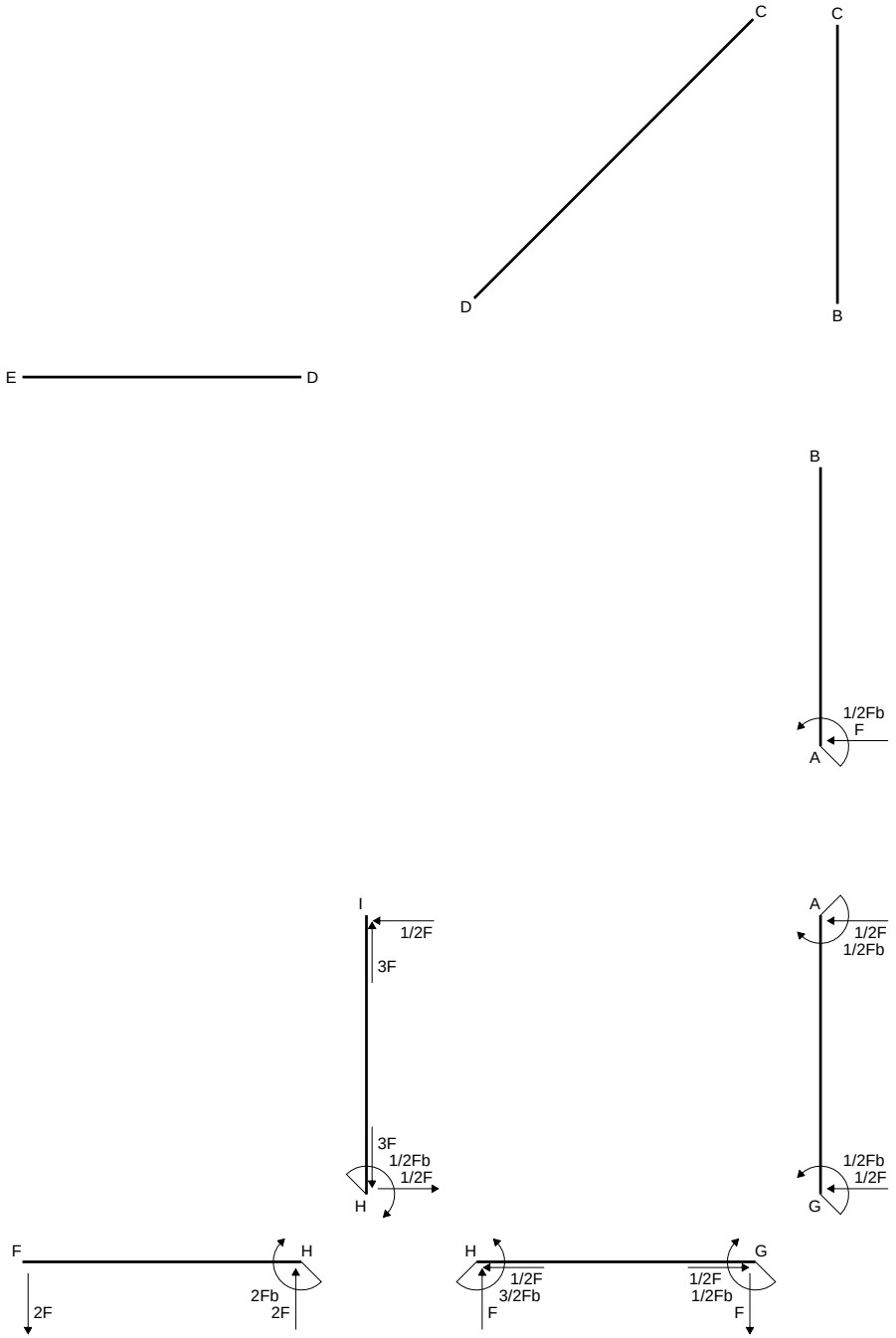
C
C
D
B
E
D
B
E
1/2Fb
F
A
F
I
1/2F
3F
3F
1/2Fb
1/2F
H
A
1/2F
1/2Fb
1/2Fb
1/2F
G
F
H
2Fb
2F
2F
H
G
1/2F
3/2Fb
F
1/2F
1/2Fb
F

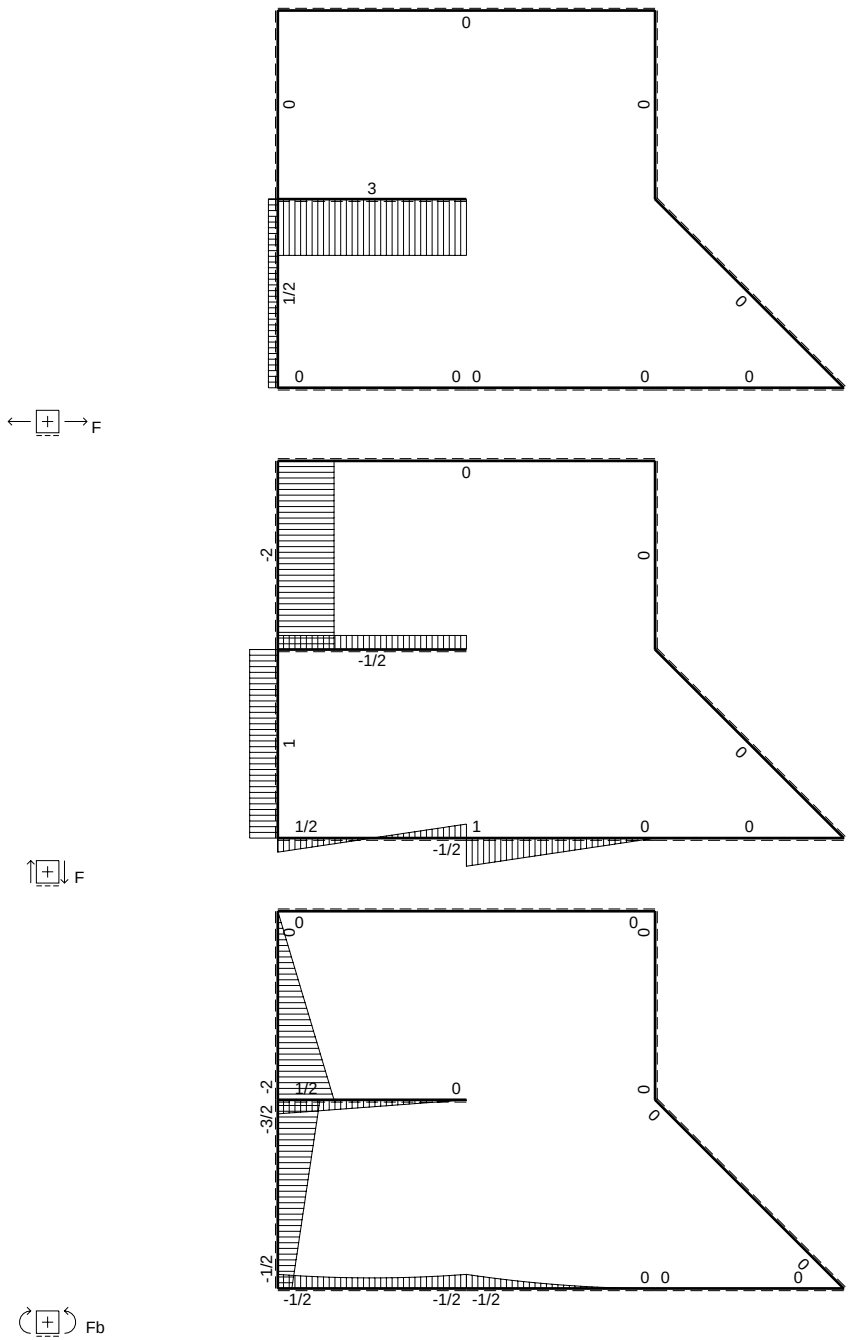
0
0
0
3
1/2
0
0 0
0
0
F
0
-2
0
-1/2
1
0
1/2
1
0
0
-1/2
F
0
0
0
0
-3/2
-2
1/2
0
0
0
-1/2
0 0
0
-1/2
-1/2 -1/2
Fb

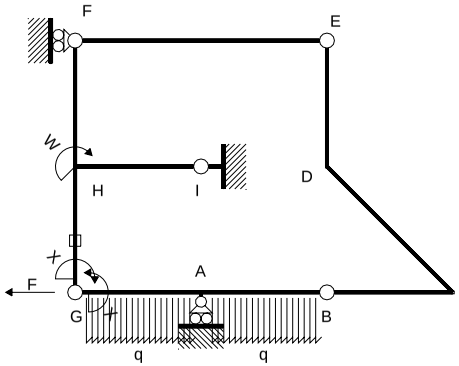

Schema di calcolo iperstatico

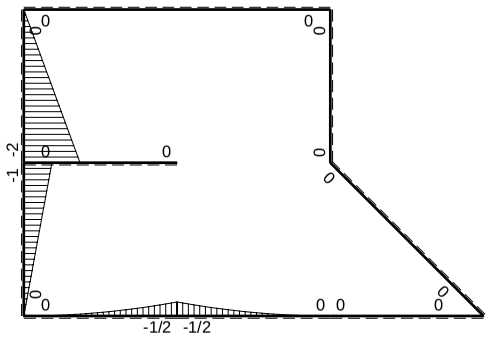

M_0 flessione da carichi assegnati

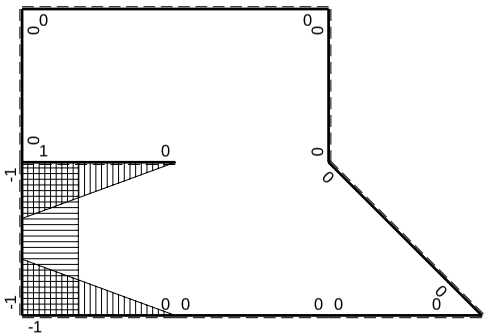

M_x flessione da iperstatica X=1

Quadro contributi PLV per iperstatica $X=W_{GA}$

→	$M_x(x)$	$M_o(x)$	M_xM_o	M_xM_x	$\int M_xM_o/EJdx$	$\int XM_xM_x/EJdx$
AB b	0	$-1/2Fb+Fx-1/2qx^2$	0	0	0	0
BA b	0	$1/2qx^2$	0	0		
BC b	0	0	0	0	0	0
CB b	0	0	0	0		
CD √2b	0	0	0	0	0	0
DE b	0	0	0	0	0	0
ED b	0	0	0	0		
EF 2b	0	0	0	0	0	0
FE 2b	0	0	0	0		
GA b	-1+x/b	$-1/2qx^2$	$1/2Fx^2/b-1/2qx^3/b$	$1-2x/b+x^2/b^2$	$1/24Fb^2/EJ$	$1/3Xb/EJ$
AG b	x/b	$1/2Fb-Fx+1/2qx^2$	$1/2Fx-Fx^2/b+1/2qx^3/b$	x^2/b^2		
FH b	0	$-2Fx$	0	0	0	0
HF b	0	$2Fb-2Fx$	0	0		
HI b	1-x/b	0	0	$1-2x/b+x^2/b^2$	0	$1/3Xb/EJ$
IH b	-x/b	0	0	x^2/b^2		
HG b	-1	$-Fb+Fx$	$Fb-Fx$	1	$1/2Fb^2/EJ$	Xb/EJ
GH b	1	Fx	Fx	1		
HG	elongazione asta $N_{1HG}\varepsilon_{HG}L_{HG}$				$-Fb^2/EJ$	
A	molla nodo $-V_{1A}(V_{0A}+XV_{1A})/k_A$				$-1/2Fb^2/EJ$	$1/4Xb/EJ$
	totali				$-23/24Fb^2/EJ$	$23/12Xb/EJ$
	iperstatica $X=W_{GA}$				$1/2Fb$	

Sviluppi di calcolo iperstatica

$L^{XX}_{GA} = \int_o^b (1 - 2\,x/b + x^2/b^2)\ 1/EJ\ dx = [\ x - x^2/b + 1/3\ x^3/b^2\ ]_o^b\ 1/EJ$

$= (\ b - b + 1/3\ b\ )\ 1/EJ\ = 1/3\ b/EJ$

$L^{XX}_{AG} = \int_o^b (\ x^2/b^2\ )\ 1/EJ\ dx = [1/3\ x^3/b^2\ ]_o^b\ 1/EJ$

$= (1/3\ b\ )\ 1/EJ\ = 1/3\ b/EJ$

$L^{XX}_{HI} = \int_o^b (1 - 2\,x/b + x^2/b^2)\ 1/EJ\ dx = [\ x - x^2/b + 1/3\ x^3/b^2\ ]_o^b\ 1/EJ$

$= (\ b - b + 1/3\ b\ )\ 1/EJ\ = 1/3\ b/EJ$

$L^{XX}_{IH} = \int_o^b (\ x^2/b^2\ )\ 1/EJ\ dx = [1/3\ x^3/b^2\ ]_o^b\ 1/EJ$

$= (1/3\ b\ )\ 1/EJ\ = 1/3\ b/EJ$

$L^{XX}_{HG} = \int_o^b (1\ )\ 1/EJ\ dx = [\ x\ ]_o^b\ 1/EJ$

$= (\ b\ )\ 1/EJ\ =\ b/EJ$

$L^{XX}_{GH} = \int_o^b (1\ )\ 1/EJ\ dx = [\ x\ ]_o^b\ 1/EJ$

$= (\ b\ )\ 1/EJ\ =\ b/EJ$

$L^{Xo}_{GA} = \int_o^b (1/2\ x^2/b^2 - 1/2\ x^3/b^3\ )\ Fb\ 1/EJ\ dx = [1/6\ x^3/b^2 - 1/8\ x^4/b^3\ ]_o^b\ Fb\ 1/EJ$

$= (1/6\ b - 1/8\ b\ )\ Fb\ 1/EJ\ = 1/24\ \ Fb^2/EJ$

$L^{Xo}_{AG} = \int_o^b (1/2\ x/b - x^2/b^2 + 1/2\ x^3/b^3\ )\ Fb\ 1/EJ\ dx = [1/4\ x^2/b - 1/3\ x^3/b^2 + 1/8\ x^4/b^3\ ]_o^b\ Fb\ 1/EJ$

$= (1/4\ b - 1/3\ b + 1/8\ b\ )\ Fb\ 1/EJ\ = 1/24\ \ Fb^2/EJ$

$L^{Xo}_{HG} = \int_o^b (1 - x/b\ )\ Fb\ 1/EJ\ dx - 1\ \ (-1)\ \ (-1)\ \ Fb^2/EJ = [\ x - 1/2\ x^2/b\ ]_o^b\ Fb\ 1/EJ\ - 1\ \ (-1)\ \ (-1)\ \ Fb^2/EJ$

$= (\ b - 1/2\ b\ )\ Fb\ 1/EJ\ - 1\ \ (-1)\ \ (-1)\ \ Fb^2/EJ = -1/2\ \ Fb^2/EJ$

$L^{Xo}_{GH} = \int_o^b (\ x/b\ )\ Fb\ 1/EJ\ dx - 1\ \ (-1)\ \ (-1)\ \ Fb^2/EJ = [1/2\ x^2/b\ ]_o^b\ Fb\ 1/EJ\ - 1\ \ (-1)\ \ (-1)\ \ Fb^2/EJ$

$= (1/2\ b\ )\ Fb\ 1/EJ\ - 1\ \ (-1)\ \ (-1)\ \ Fb^2/EJ = -1/2\ \ Fb^2/EJ$

PROCEDIMENTO E RISULTATI 280952 ESΣ05.xxxx.131

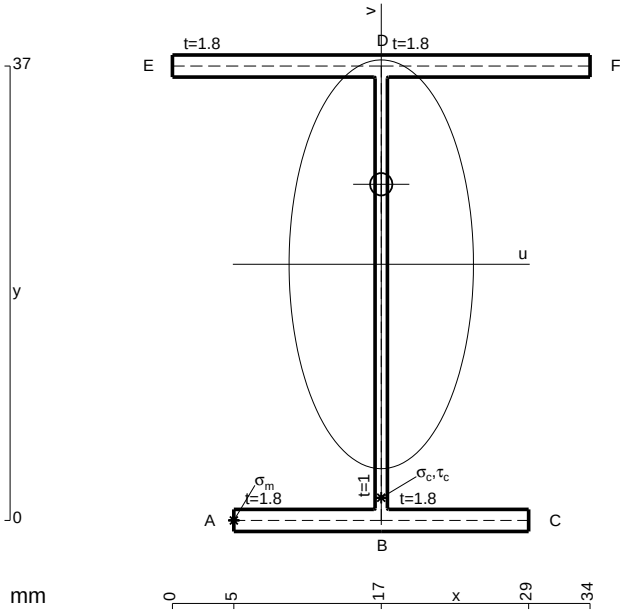

A = 141.4 mm^2
J_u = 39168. mm^4
J_v = 7969. mm^4
J_t = 125.1 mm^4
y_o = 6.518 mm
y_g = 20.85 mm
T_y = -1160. N
M_x = -394400. Nmm
x_m = 5. mm
u_m = -12. mm
v_m = -20.85 mm
$\sigma_m = -Mv/J_u$ = -210. N/mm^2
x_c = 17. mm
v_c = -20.85 mm
$\sigma_c = -Mv/J_u$ = -210. N/mm^2
$\tau_c = TS^*/tJ_u$ = 26.68 N/mm^2
$\tau_g = TS^*/tJ_u$ = 26.68 N/mm^2
t_c = 580. mm
$\sigma_o = \sqrt{\sigma^2 + 3\tau^2}$ = 215. N/mm^2

@ Adolfo Zavelani Rossi, Politecnico di Milano, vers.27.03.13 01.12.25

ESΣ05.xxxx.131

@ Adolfo Zavelani Rossi, Politecnico di Milano, vers.27.03.13 01.12.25

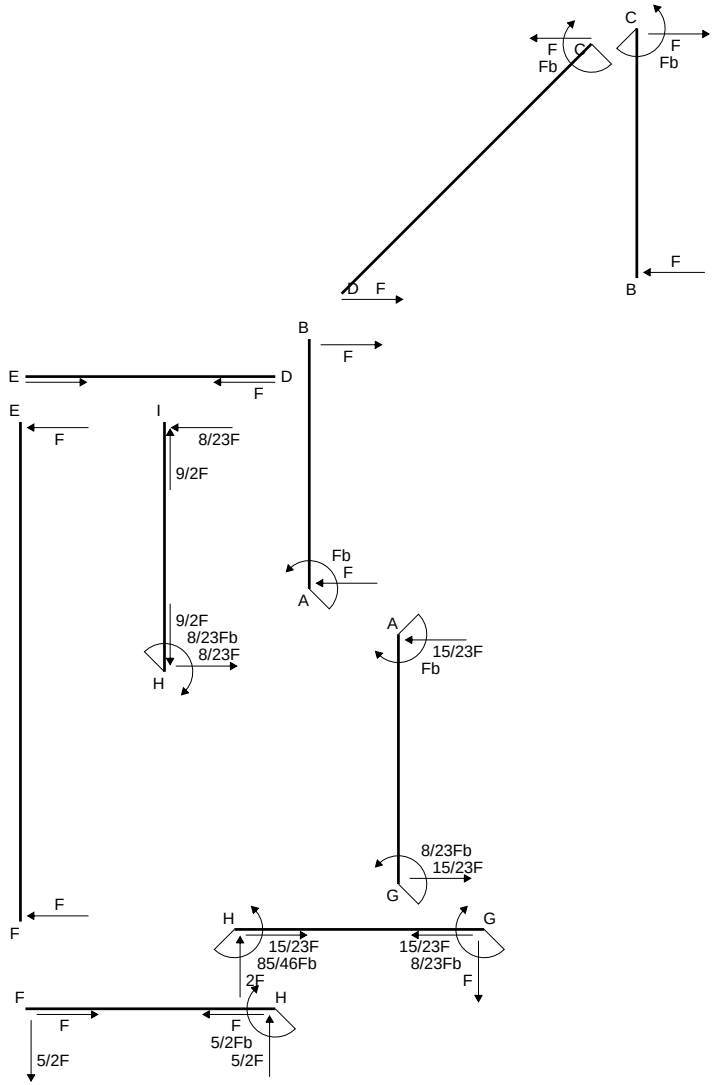
C
F
Fb
C
F
Fb
D
F
B
F
B
F
E
D
F
E
F
I
8/23F
9/2F
Fb
F
A
9/2F
8/23Fb
8/23F
H
A
15/23F
Fb
8/23Fb
15/23F
G
F
F
H
G
15/23F
85/46Fb
2F
15/23F
8/23Fb
F
F
H
F
F
5/2Fb
5/2F
5/2F

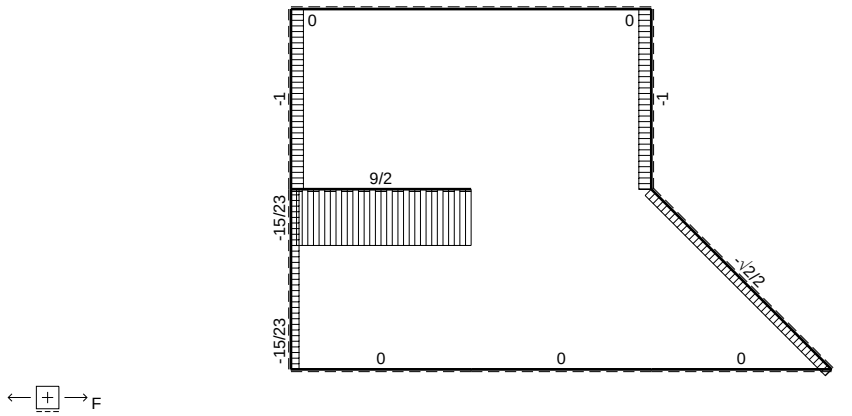
F
0
0
-1
-1
9/2
-15/23
-√2/2
-15/23
0
0
0

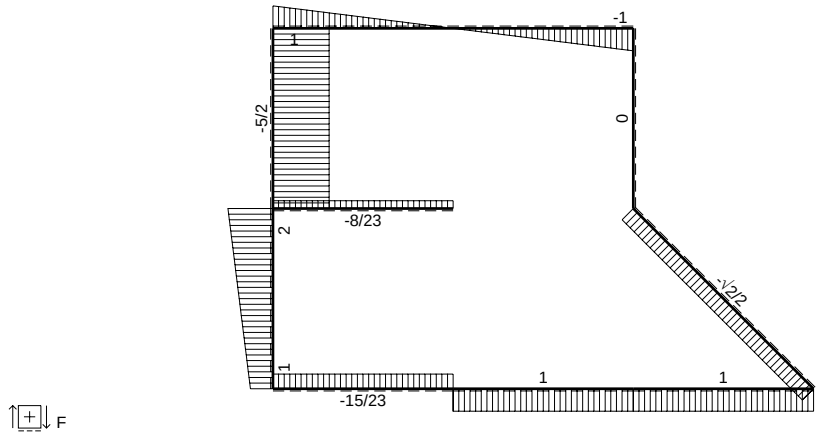
F
-1
1
-5/2
0
-8/23
2
-√2/2
1
1
1
-15/23

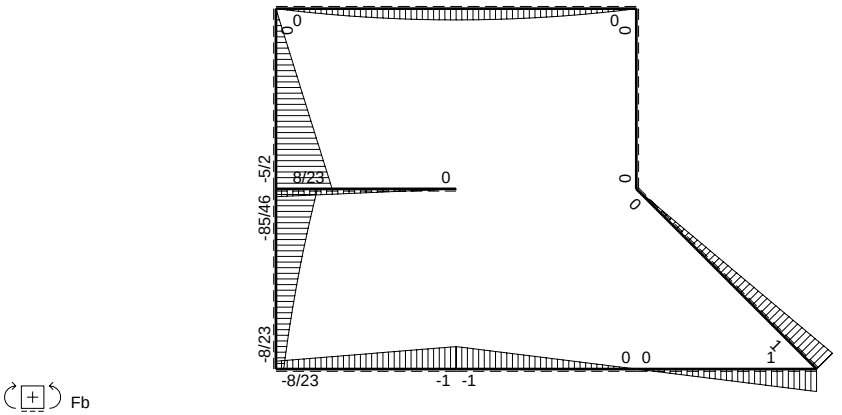
Fb
0
0
0
0
-5/2
8/23
0
0
0
-85/46
-8/23
0 0
1
-8/23
-1 -1

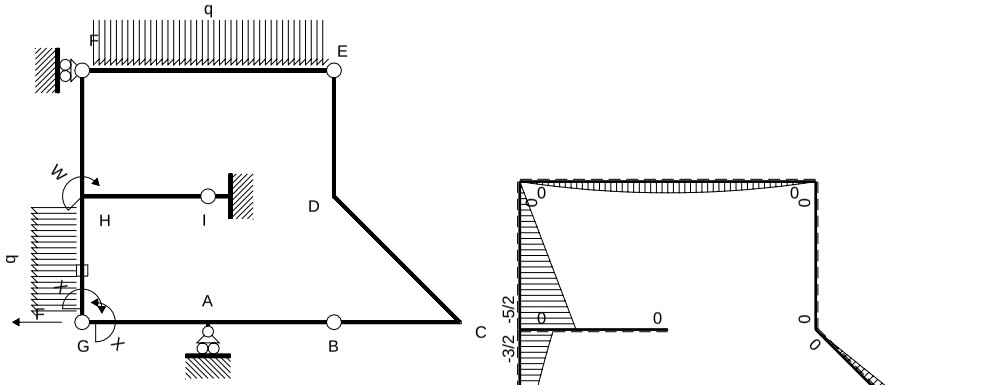

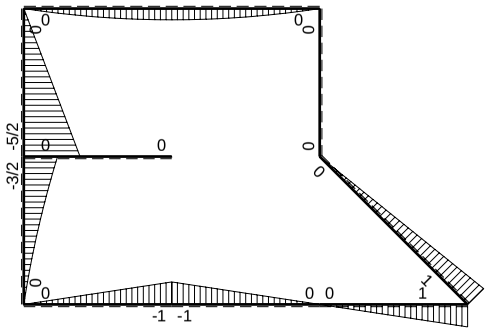

M_0 flessione da carichi assegnati

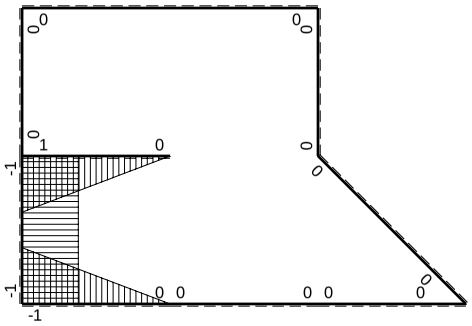

M_x flessione da iperstatica X=1

Quadro contributi PLV per iperstatica $X=W_{GA}$

→	$M_x(x)$	$M_0(x)$	M_xM_0	M_xM_x	$\int M_xM_0/EJdx$	$\int XM_xM_x/EJdx$
AB b	0	-Fb+Fx	0	0	0	0
BA b	0	Fx	0	0		
BC b	0	Fx	0	0	0	0
CB b	0	-Fb+Fx	0	0		
CD √2b	0	Fb-√2/2Fx	0	0	0	0
DE b	0	0	0	0	0	0
ED b	0	0	0	0		
EF 2b	0	$-Fx+1/2qx^2$	0	0	0	0
FE 2b	0	$Fx-1/2qx^2$	0	0		
GA b	-1+x/b	-Fx	$Fx-Fx^2/b$	$1-2x/b+x^2/b^2$	$1/6Fb^2/EJ$	1/3Xb/EJ
AG b	x/b	Fb-Fx	$Fx-Fx^2/b$	x^2/b^2		
FH b	0	-5/2Fx	0	0	0	0
HF b	0	5/2Fb-5/2Fx	0	0		
HI b	1-x/b	0	0	$1-2x/b+x^2/b^2$	0	1/3Xb/EJ
IH b	-x/b	0	0	x^2/b^2		
HG b	-1	$-3/2Fb+2Fx-1/2qx^2$	$3/2Fb-2Fx+1/2Fx^2/b$	1	$2/3Fb^2/EJ$	Xb/EJ
GH b	1	$Fx+1/2qx^2$	$Fx+1/2Fx^2/b$	1		
HG	elongazione asta $N_{1HG}\varepsilon_{HG}L_{HG}$				$-Fb^2/EJ$	
A	molla nodo $-V_{1A}(V_{0A}+XV_{1A})/k_A$				$-1/2Fb^2/EJ$	1/4Xb/EJ
	totali				$-2/3Fb^2/EJ$	23/12Xb/EJ
	iperstatica $X=W_{GA}$				8/23Fb	

Sviluppi di calcolo iperstatica

$L^{XX}_{GA} = \int_o^b (1 - 2\,x/b + x^2/b^2)\ 1/EJ\ dx = [\,x - x^2/b + 1/3\,x^3/b^2\,]_o^b\ 1/EJ$

$= (\,b - b + 1/3\,b\,)\ 1/EJ\ = 1/3\ b/EJ$

$L^{XX}_{AG} = \int_o^b (\,x^2/b^2\,)\ 1/EJ\ dx = [1/3\,x^3/b^2\,]_o^b\ 1/EJ$

$= (1/3\,b\,)\ 1/EJ\ = 1/3\ b/EJ$

$L^{XX}_{HI} = \int_o^b (1 - 2\,x/b + x^2/b^2)\ 1/EJ\ dx = [\,x - x^2/b + 1/3\,x^3/b^2\,]_o^b\ 1/EJ$

$= (\,b - b + 1/3\,b\,)\ 1/EJ\ = 1/3\ b/EJ$

$L^{XX}_{IH} = \int_o^b (\,x^2/b^2\,)\ 1/EJ\ dx = [1/3\,x^3/b^2\,]_o^b\ 1/EJ$

$= (1/3\,b\,)\ 1/EJ\ = 1/3\ b/EJ$

$L^{XX}_{HG} = \int_o^b (1)\ 1/EJ\ dx = [\,x\,]_o^b\ 1/EJ$

$= (\,b\,)\ 1/EJ\ =\ b/EJ$

$L^{XX}_{GH} = \int_o^b (1)\ 1/EJ\ dx = [\,x\,]_o^b\ 1/EJ$

$= (\,b\,)\ 1/EJ\ =\ b/EJ$

$L^{Xo}_{GA} = \int_o^b (\,x/b - x^2/b^2\,)\ Fb\ 1/EJ\ dx = [1/2\,x^2/b - 1/3\,x^3/b^2\,]_o^b\ Fb\ 1/EJ$

$= (1/2\ b - 1/3\ b\,)\ Fb\ 1/EJ\ = 1/6\ Fb^2/EJ$

$L^{Xo}_{AG} = \int_o^b (\,x/b - x^2/b^2\,)\ Fb\ 1/EJ\ dx = [1/2\,x^2/b - 1/3\,x^3/b^2\,]_o^b\ Fb\ 1/EJ$

$= (1/2\ b - 1/3\ b\,)\ Fb\ 1/EJ\ = 1/6\ Fb^2/EJ$

$L^{Xo}_{HG} = \int_o^b (3/2 - 2\,x/b + 1/2\,x^2/b^2\,)\ Fb\ 1/EJ\ dx - 1\ \ (-1)\ \ (-1)\ \ Fb^2/EJ$

$= [3/2\,x - x^2/b + 1/6\,x^3/b^2\,]_o^b\ Fb\ 1/EJ\ - 1\ \ (-1)\ \ (-1)\ \ Fb^2/EJ$

$= (3/2\ b - b + 1/6\ b\,)\ Fb\ 1/EJ\ - 1\ \ (-1)\ \ (-1)\ \ Fb^2/EJ = -1/3\ \ Fb^2/EJ$

$L^{Xo}_{GH} = \int_o^b (\,x/b + 1/2\,x^2/b^2\,)\ Fb\ 1/EJ\ dx - 1\ \ (-1)\ \ (-1)\ \ Fb^2/EJ$

$= [1/2\,x^2/b + 1/6\,x^3/b^2\,]_o^b\ Fb\ 1/EJ\ - 1\ \ (-1)\ \ (-1)\ \ Fb^2/EJ$

$= (1/2\ b + 1/6\ b\,)\ Fb\ 1/EJ\ - 1\ \ (-1)\ \ (-1)\ \ Fb^2/EJ = -1/3\ \ Fb^2/EJ$

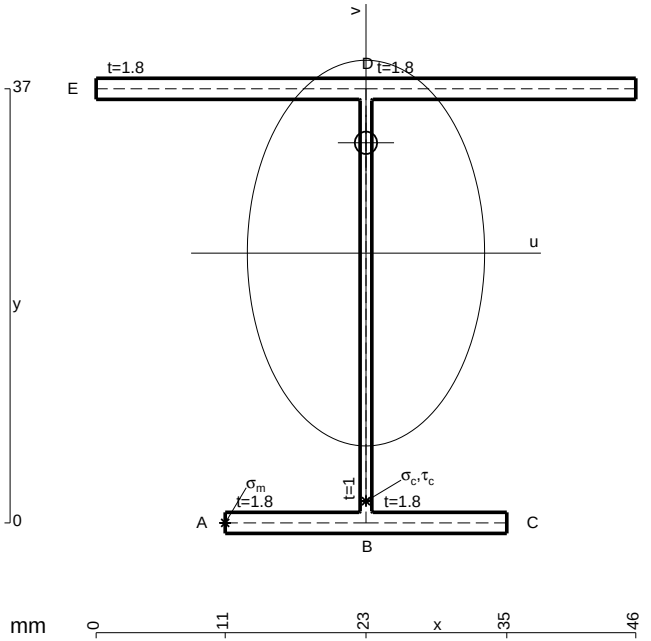

A = 163. mm^2
J_u = 44052. mm^4
J_v = 16674. mm^4
J_t = 148.4 mm^4
y_o = 9.404 mm
y_g = 22.99 mm
N = -440. N
T_y = -1100. N
M_x = -407000. Nmm
x_m = 11. mm
u_m = -12. mm
v_m = -22.99 mm
$\sigma_m = N/A - Mv/J_u$ = -215.1 N/mm^2
x_c = 23. mm
v_c = -22.99 mm
$\sigma_c = N/A - Mv/J_u$ = -215.1 N/mm^2
$\tau_c = TS^*/tJ_u$ = 24.8 N/mm^2
$\tau_g = TS^*/tJ_u$ = 24.8 N/mm^2
t_c = 440. mm
$\sigma_o = \sqrt{\sigma^2 + 3\tau^2}$ = 219.4 N/mm^2

ESΣ05.xxxx.132

@ Adolfo Zavelani Rossi, Politecnico di Milano, vers.27.03.13 01.12.25

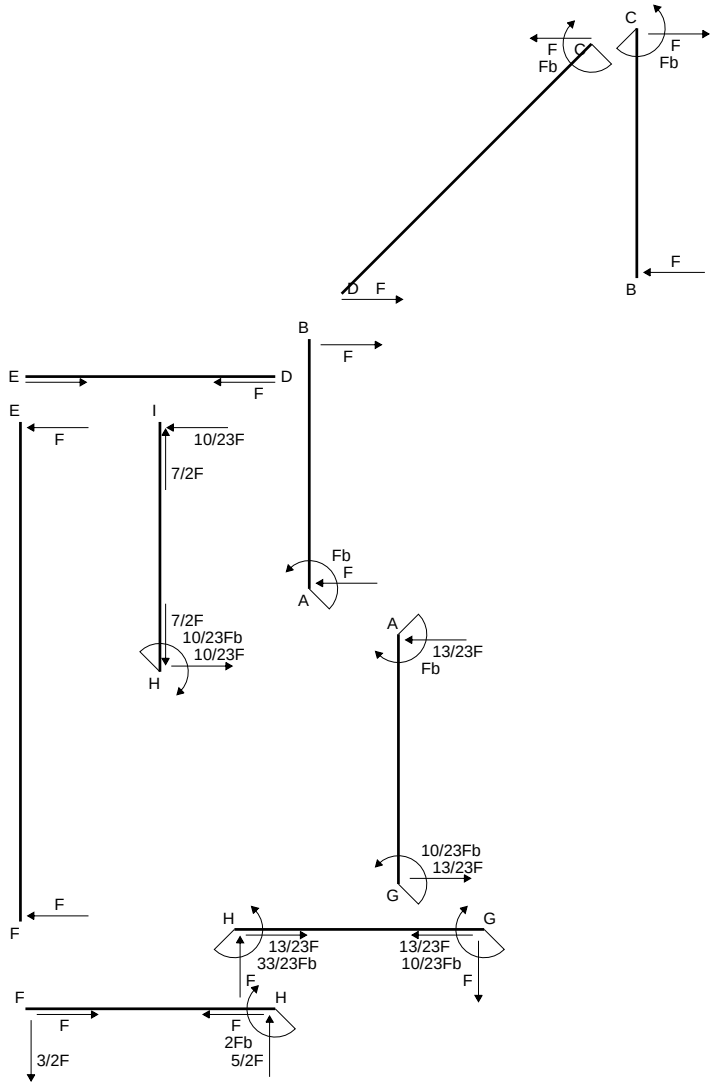
C
F
Fb
C
F
Fb
D F
F
B
B
F
E
D
F
E
F
I
10/23F
7/2F
Fb
F
A
7/2F
10/23Fb
10/23F
H
A
13/23F
Fb
10/23Fb
13/23F
G
F
F
H
G
13/23F
33/23Fb
13/23F
10/23Fb
F
F
H
F
F
2Fb
5/2F
3/2F

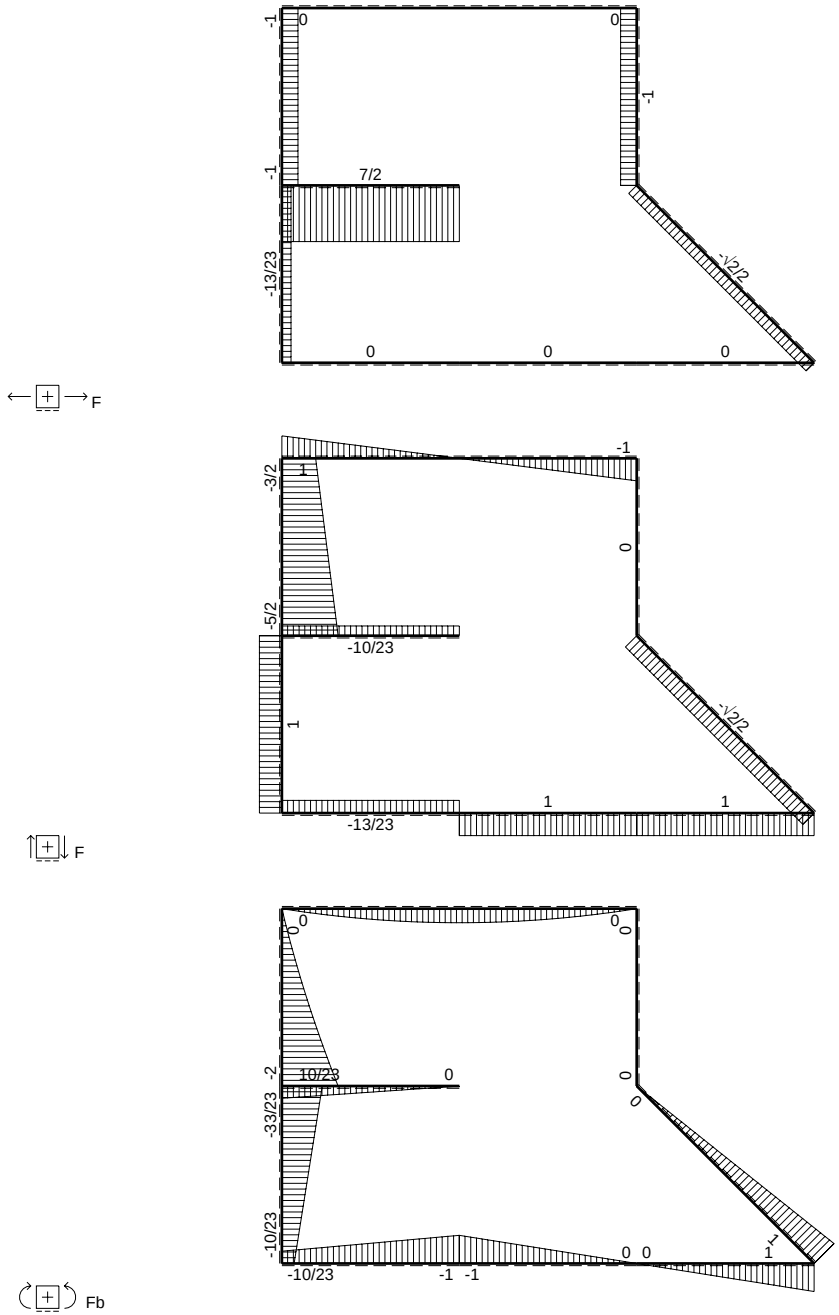
F
-1
0
0
-1
-1
7/2
-13/23
-√2/2
0
0
0
F
-3/2
1
-1
0
-5/2
-10/23
1
-√2/2
1
1
-13/23
F
0
0
0
0
-2
10/23
0
-33/23
0
0
-10/23
0 0
1
-10/23
-1 -1
Fb

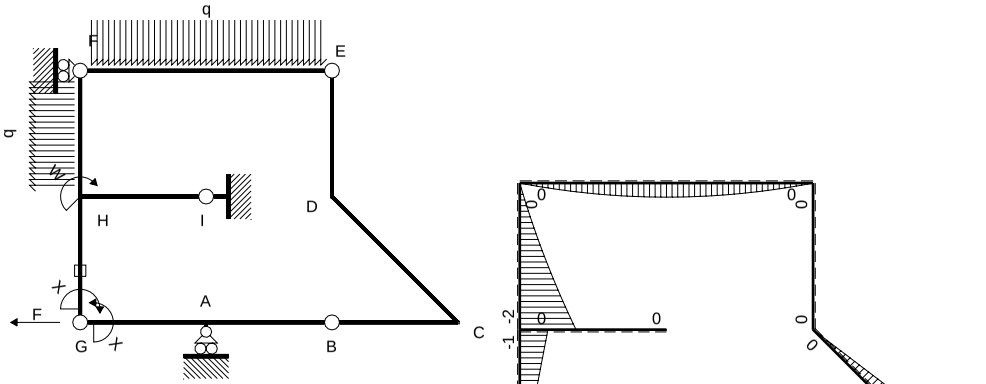

M_0 flessione da carichi assegnati

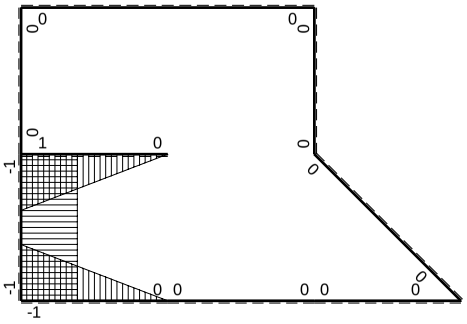

M_x flessione da iperstatica X=1

Quadro contributi PLV per iperstatica $X=W_{GA}$

→	$M_x(x)$	$M_0(x)$	M_xM_0	M_xM_x	$\int M_xM_0/EJdx$	$\int XM_xM_x/EJdx$
AB b	0	-Fb+Fx	0	0	0	0
BA b	0	Fx	0	0		
BC b	0	Fx	0	0	0	0
CB b	0	-Fb+Fx	0	0		
CD √2b	0	Fb-√2/2Fx	0	0	0	0
DE b	0	0	0	0	0	0
ED b	0	0	0	0		
EF 2b	0	$-Fx+1/2qx^2$	0	0	0	0
FE 2b	0	$Fx-1/2qx^2$	0	0		
GA b	-1+x/b	-Fx	$Fx-Fx^2/b$	$1-2x/b+x^2/b^2$	$1/6Fb^2/EJ$	$1/3Xb/EJ$
AG b	x/b	Fb-Fx	$Fx-Fx^2/b$	x^2/b^2		
FH b	0	$-3/2Fx-1/2qx^2$	0	0	0	0
HF b	0	$2Fb-5/2Fx+1/2qx^2$	0	0		
HI b	1-x/b	0	0	$1-2x/b+x^2/b^2$	0	$1/3Xb/EJ$
IH b	-x/b	0	0	x^2/b^2		
HG b	-1	-Fb+Fx	Fb-Fx	1	$1/2Fb^2/EJ$	Xb/EJ
GH b	1	Fx	Fx	1		
HG	elongazione asta $N_{1HG}\varepsilon_{HG}L_{HG}$				$-Fb^2/EJ$	
A	molla nodo $-V_{1A}(V_{0A}+XV_{1A})/k_A$				$-1/2Fb^2/EJ$	$1/4Xb/EJ$
	totali				$-5/6Fb^2/EJ$	$23/12Xb/EJ$
	iperstatica $X=W_{GA}$				10/23Fb	

Sviluppi di calcolo iperstatica

$L^{XX}_{GA} = \int_o^b (1 - 2\,x/b + x^2/b^2)\ 1/EJ\ dx = [\,x - x^2/b + 1/3\,x^3/b^2\,]_o^b\ 1/EJ$

$= (\,b - b + 1/3\,b\,)\ 1/EJ\ = 1/3\ b/EJ$

$L^{XX}_{AG} = \int_o^b (\,x^2/b^2\,)\ 1/EJ\ dx = [1/3\,x^3/b^2\,]_o^b\ 1/EJ$

$= (1/3\,b\,)\ 1/EJ\ = 1/3\ b/EJ$

$L^{XX}_{HI} = \int_o^b (1 - 2\,x/b + x^2/b^2)\ 1/EJ\ dx = [\,x - x^2/b + 1/3\,x^3/b^2\,]_o^b\ 1/EJ$

$= (\,b - b + 1/3\,b\,)\ 1/EJ\ = 1/3\ b/EJ$

$L^{XX}_{IH} = \int_o^b (\,x^2/b^2\,)\ 1/EJ\ dx = [1/3\,x^3/b^2\,]_o^b\ 1/EJ$

$= (1/3\,b\,)\ 1/EJ\ = 1/3\ b/EJ$

$L^{XX}_{HG} = \int_o^b (1)\ 1/EJ\ dx = [\,x\,]_o^b\ 1/EJ$

$= (\,b\,)\ 1/EJ\ =\ b/EJ$

$L^{XX}_{GH} = \int_o^b (1)\ 1/EJ\ dx = [\,x\,]_o^b\ 1/EJ$

$= (\,b\,)\ 1/EJ\ =\ b/EJ$

$L^{Xo}_{GA} = \int_o^b (\,x/b - x^2/b^2\,)\ Fb\ 1/EJ\ dx = [1/2\,x^2/b - 1/3\,x^3/b^2\,]_o^b\ Fb\ 1/EJ$

$= (1/2\,b - 1/3\,b\,)\ Fb\ 1/EJ\ = 1/6\ Fb^2/EJ$

$L^{Xo}_{AG} = \int_o^b (\,x/b - x^2/b^2\,)\ Fb\ 1/EJ\ dx = [1/2\,x^2/b - 1/3\,x^3/b^2\,]_o^b\ Fb\ 1/EJ$

$= (1/2\,b - 1/3\,b\,)\ Fb\ 1/EJ\ = 1/6\ Fb^2/EJ$

$L^{Xo}_{HG} = \int_o^b (1 - x/b)\ Fb\ 1/EJ\ dx - 1\ \ (-1)\ \ (-1)\ \ Fb^2/EJ = [\,x - 1/2\,x^2/b\,]_o^b\ Fb\ 1/EJ\ - 1\ \ (-1)\ \ (-1)\ \ Fb^2/EJ$

$= (\,b - 1/2\,b\,)\ Fb\ 1/EJ\ - 1\ \ (-1)\ \ (-1)\ \ Fb^2/EJ = -1/2\ \ Fb^2/EJ$

$L^{Xo}_{GH} = \int_o^b (\,x/b\,)\ Fb\ 1/EJ\ dx - 1\ \ (-1)\ \ (-1)\ \ Fb^2/EJ = [1/2\,x^2/b\,]_o^b\ Fb\ 1/EJ\ - 1\ \ (-1)\ \ (-1)\ \ Fb^2/EJ$

$= (1/2\,b\,)\ Fb\ 1/EJ\ - 1\ \ (-1)\ \ (-1)\ \ Fb^2/EJ = -1/2\ \ Fb^2/EJ$

PROCEDIMENTO E RISULTATI 236693 ESΣ05.xxxx.133

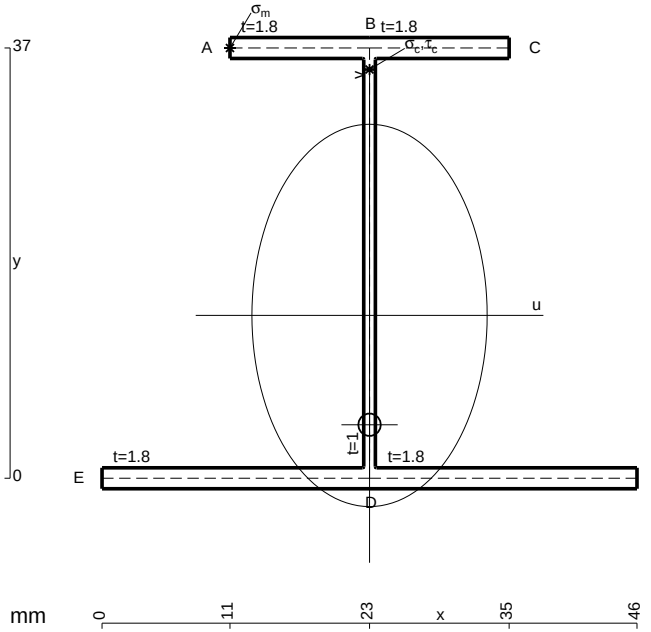

A = 163. mm^2
J_u = 44052. mm^4
J_v = 16674. mm^4
J_t = 148.4 mm^4
y_o = -9.404 mm
y_g = 14.01 mm
N = -550. N
T_y = -1375. N
M_x = -440000. Nmm
x_m = 11. mm
y_m = 37. mm
u_m = -12. mm
v_m = 22.99 mm
$\sigma_m = N/A - Mv/J_u$ = 226.3 N/mm^2
x_c = 23. mm
y_c = 37. mm
v_c = 22.99 mm
$\sigma_c = N/A - Mv/J_u$ = 226.3 N/mm^2
$\tau_c = TS^*/tJ_u$ = 31.01 N/mm^2
$\tau_g = TS^*/tJ_u$ = 31.01 N/mm^2
t_c = 550. mm
$\sigma_o = \sqrt{\sigma^2 + 3\tau^2}$ = 232.6 N/mm^2

@ Adolfo Zavelani Rossi, Politecnico di Milano, vers.27.03.13 01.12.25

ESΣ05.xxxx.133

@ Adolfo Zavelani Rossi, Politecnico di Milano, vers.27.03.13 01.12.25

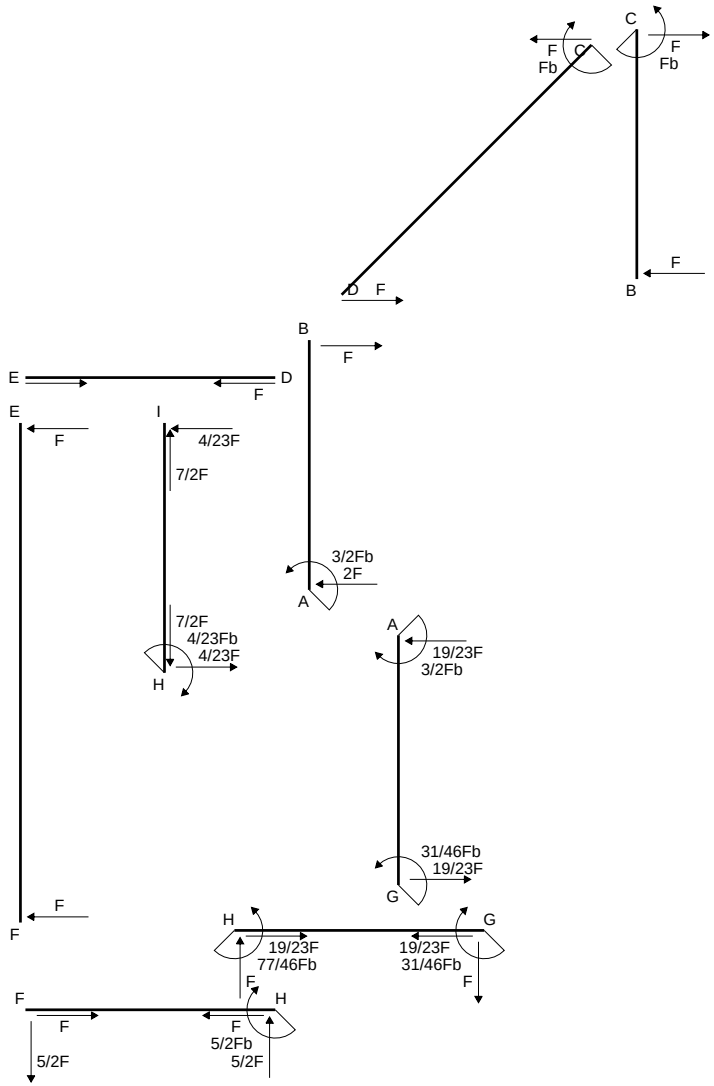
C
F
Fb
C
F
Fb
F
B
D F
B
F
E
D
F
E
F
I
4/23F
7/2F
3/2Fb
2F
A
7/2F
4/23Fb
4/23F
H
A
19/23F
3/2Fb
31/46Fb
19/23F
G
F
F
H
G
19/23F
77/46Fb
19/23F
31/46Fb
F
F
F
H
F
5/2Fb
5/2F
F
5/2F

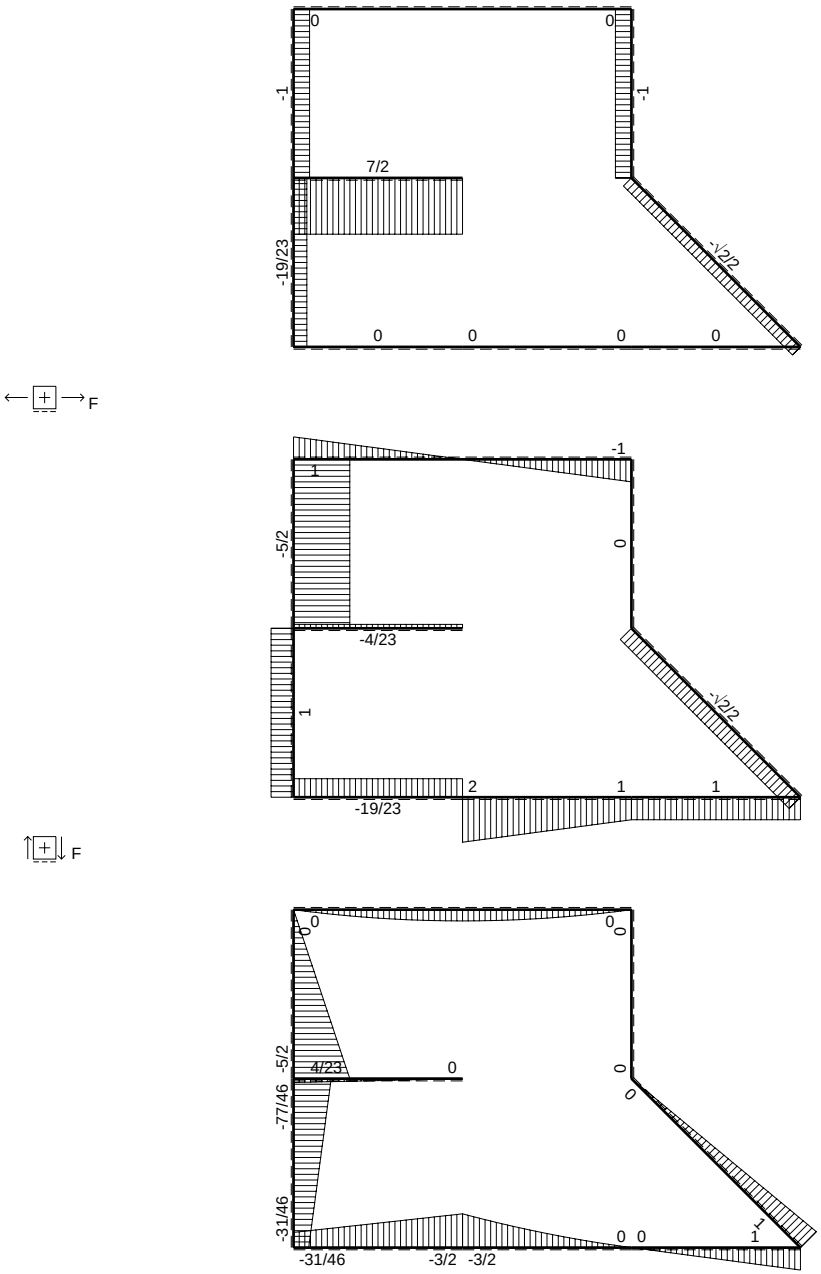
F
0
0
-1
-1
7/2
-19/23
√2/2
0
0
0
0
F
-1
1
-5/2
0
-4/23
√2/2
1
2
1
1
-19/23
F
0
0
0
0
-5/2
4/23
0
0
0
-77/46
-31/46
0 0
1
1
-31/46
-3/2 -3/2
Fb

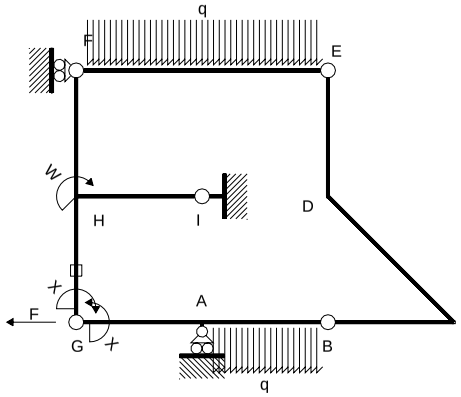

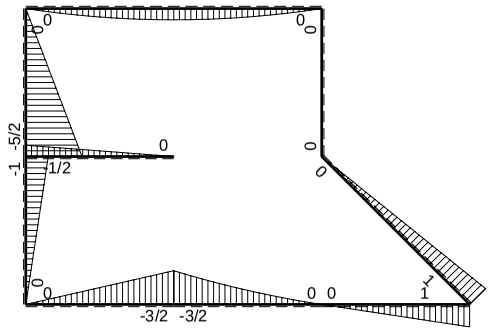

M_0 flessione da carichi assegnati

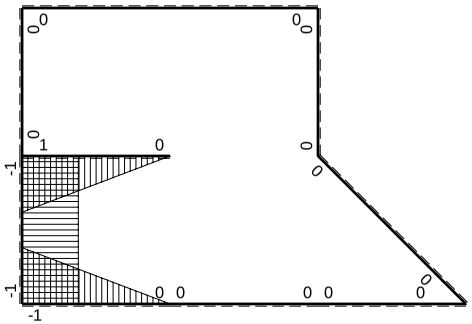

M_x flessione da iperstatica X=1

Quadro contributi PLV per iperstatica $X=W_{GA}$

→	$M_x(x)$	$M_0(x)$	M_xM_0	M_xM_x	$\int M_xM_0/EJdx$	$\int XM_xM_x/EJdx$
AB b	0	$-3/2Fb+2Fx-1/2qx^2$	0	0	0	0
BA b	0	$Fx+1/2qx^2$	0	0		
BC b	0	Fx	0	0	0	0
CB b	0	-Fb+Fx	0	0		
CD $\sqrt{2}$b	0	Fb-$\sqrt{2}$/2Fx	0	0	0	0
DE b	0	0	0	0	0	0
ED b	0	0	0	0		
EF 2b	0	$-Fx+1/2qx^2$	0	0	0	0
FE 2b	0	$Fx-1/2qx^2$	0	0		
GA b	-1+x/b	-3/2Fx	$3/2Fx-3/2Fx^2/b$	$1-2x/b+x^2/b^2$	$1/4Fb^2/EJ$	1/3Xb/EJ
AG b	x/b	3/2Fb-3/2Fx	$3/2Fx-3/2Fx^2/b$	x^2/b^2		
FH b	0	-5/2Fx	0	0	0	0
HF b	0	5/2Fb-5/2Fx	0	0		
HI b	1-x/b	$-1/2Fb+1/2Fx$	$-1/2Fb+Fx-1/2Fx^2/b$	$1-2x/b+x^2/b^2$	$-1/6Fb^2/EJ$	1/3Xb/EJ
IH b	-x/b	$1/2Fx$	$-1/2Fx^2/b$	x^2/b^2		
HG b	-1	-Fb+Fx	Fb-Fx	1	$1/2Fb^2/EJ$	Xb/EJ
GH b	1	Fx	Fx	1		
HG	elongazione asta $N_{1HG}\varepsilon_{HG}L_{HG}$				$-Fb^2/EJ$	
A	molla nodo $-V_{1A}(V_{0A}+XV_{1A})/k_A$				$-7/8Fb^2/EJ$	1/4Xb/EJ
	totali				$-31/24Fb^2/EJ$	23/12Xb/EJ
	iperstatica $X=W_{GA}$				31/46Fb	

Sviluppi di calcolo iperstatica

$L^{XX}_{GA} = \int_o^b (1 - 2\,x/b + x^2/b^2)\ 1/EJ\ dx = [\ x - x^2/b + 1/3\ x^3/b^2\ ]_o^b\ 1/EJ$

$= (\ b - b + 1/3\ b\ )\ 1/EJ\ = 1/3\ b/EJ$

$L^{XX}_{AG} = \int_o^b (\ x^2/b^2\ )\ 1/EJ\ dx = [1/3\ x^3/b^2\ ]_o^b\ 1/EJ$

$= (1/3\ b\ )\ 1/EJ\ = 1/3\ b/EJ$

$L^{XX}_{HI} = \int_o^b (1 - 2\,x/b + x^2/b^2)\ 1/EJ\ dx = [\ x - x^2/b + 1/3\ x^3/b^2\ ]_o^b\ 1/EJ$

$= (\ b - b + 1/3\ b\ )\ 1/EJ\ = 1/3\ b/EJ$

$L^{XX}_{IH} = \int_o^b (\ x^2/b^2\ )\ 1/EJ\ dx = [1/3\ x^3/b^2\ ]_o^b\ 1/EJ$

$= (1/3\ b\ )\ 1/EJ\ = 1/3\ b/EJ$

$L^{XX}_{HG} = \int_o^b (1)\ 1/EJ\ dx = [\ x\ ]_o^b\ 1/EJ$

$= (\ b\ )\ 1/EJ\ =\ b/EJ$

$L^{XX}_{GH} = \int_o^b (1)\ 1/EJ\ dx = [\ x\ ]_o^b\ 1/EJ$

$= (\ b\ )\ 1/EJ\ =\ b/EJ$

$L^{Xo}_{GA} = \int_o^b (3/2\ x/b - 3/2\ x^2/b^2)\ Fb\ 1/EJ\ dx = [3/4\ x^2/b - 1/2\ x^3/b^2\ ]_o^b\ Fb\ 1/EJ$

$= (3/4\ b - 1/2\ b\ )\ Fb\ 1/EJ\ = 1/4\ Fb^2/EJ$

$L^{Xo}_{AG} = \int_o^b (3/2\ x/b - 3/2\ x^2/b^2)\ Fb\ 1/EJ\ dx = [3/4\ x^2/b - 1/2\ x^3/b^2\ ]_o^b\ Fb\ 1/EJ$

$= (3/4\ b - 1/2\ b\ )\ Fb\ 1/EJ\ = 1/4\ Fb^2/EJ$

$L^{Xo}_{HI} = \int_o^b (-1/2 + x/b - 1/2\ x^2/b^2)\ Fb\ 1/EJ\ dx = [-1/2\ x + 1/2\ x^2/b - 1/6\ x^3/b^2\ ]_o^b\ Fb\ 1/EJ$

$= (-1/2\ b + 1/2\ b - 1/6\ b\ )\ Fb\ 1/EJ\ = -1/6\ Fb^2/EJ$

$L^{Xo}_{IH} = \int_o^b (-1/2\ x^2/b^2)\ Fb\ 1/EJ\ dx = [-1/6\ x^3/b^2\ ]_o^b\ Fb\ 1/EJ$

$= (-1/6\ b\ )\ Fb\ 1/EJ\ = -1/6\ Fb^2/EJ$

$L^{Xo}_{HG} = \int_o^b (1 - x/b\ )\ Fb\ 1/EJ\ dx - 1\ \ (-1)\ \ (-1)\ \ Fb^2/EJ = [\ x - 1/2\ x^2/b\ ]_o^b\ Fb\ 1/EJ\ \ - 1\ \ (-1)\ \ (-1)\ \ Fb^2/EJ$

$= (\ b - 1/2\ b\ )\ Fb\ 1/EJ\ \ - 1\ \ (-1)\ \ (-1)\ \ Fb^2/EJ = -1/2\ \ Fb^2/EJ$

$L^{Xo}_{GH} = \int_o^b (\ x/b\ )\ Fb\ 1/EJ\ dx - 1\ \ (-1)\ \ (-1)\ \ Fb^2/EJ = [1/2\ x^2/b\ ]_o^b\ Fb\ 1/EJ\ \ - 1\ \ (-1)\ \ (-1)\ \ Fb^2/EJ$

$= (1/2\ b\ )\ Fb\ 1/EJ\ \ - 1\ \ (-1)\ \ (-1)\ \ Fb^2/EJ = -1/2\ \ Fb^2/EJ$

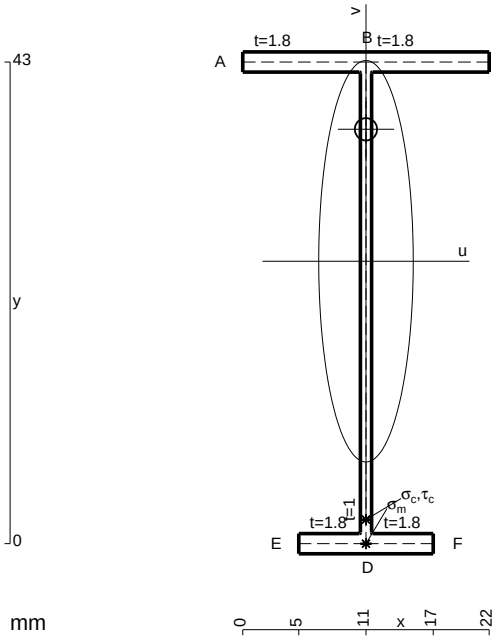

A = 104.2 mm^2
J_u = 33478. mm^4
J_v = 1856. mm^4
J_t = 80.43 mm^4
y_o = 11.78 mm
y_g = 25.21 mm
N = -240. N
T_y = -600. N
M_x = -306000. Nmm
x_m = 11. mm
v_m = -25.21 mm
$\sigma_m = N/A - Mv/J_u$ = -232.8 N/mm^2
y_c = 3. mm
u_c = -11. mm
v_c = -22.21 mm
$\sigma_c = N/A - Mv/J_u$ = -232.8 N/mm^2
$\tau_c = TS^*/tJ_u$ = 9.761 N/mm^2
$\tau_g = TS^*/tJ_u$ = 9.761 N/mm^2
t_c = 240. mm
$\sigma_o = \sqrt{\sigma^2 + 3\tau^2}$ = 233.4 N/mm^2

ESΣ05.xxxx.134

@ Adolfo Zavelani Rossi, Politecnico di Milano, vers.27.03.13 01.12.25

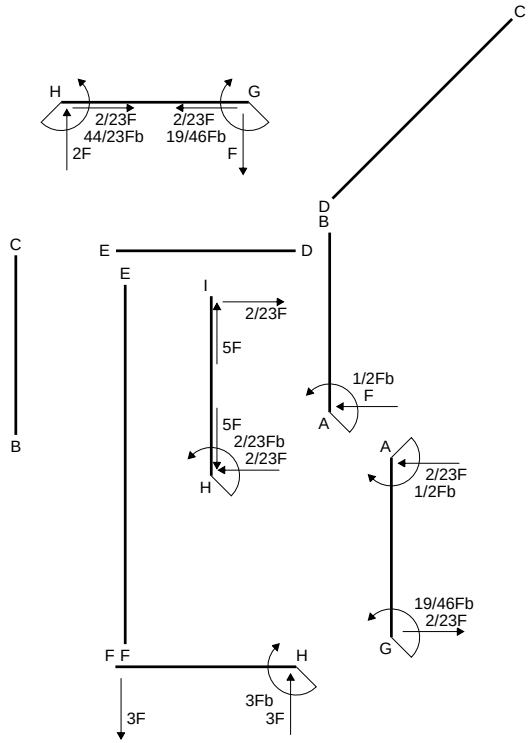
H
G
2/23F
44/23Fb
2F
2/23F
19/46Fb
F
C
D
B
E
D
C
B
E
I
2/23F
5F
1/2Fb
F
A
5F
2/23Fb
2/23F
H
A
2/23F
1/2Fb
19/46Fb
2/23F
G
F F
H
3Fb
3F
3F

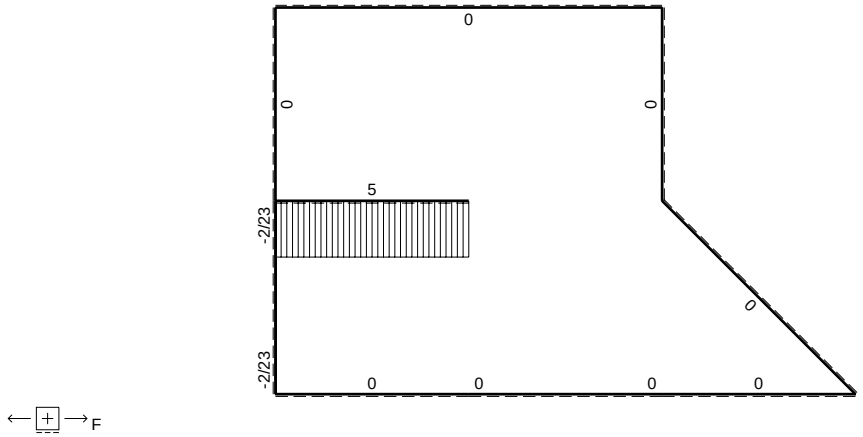
F
0
0
0
5
-2/23
0
-2/23
0 0 0 0

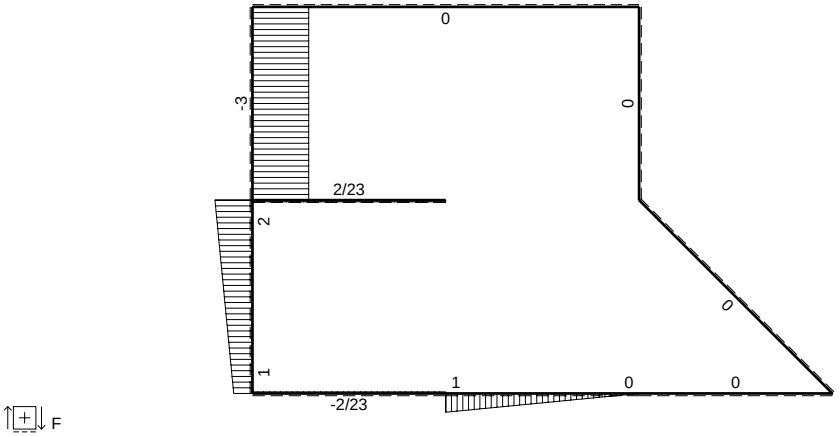
F
0
-3
0
2/23
2
0
1
-2/23
1
0 0

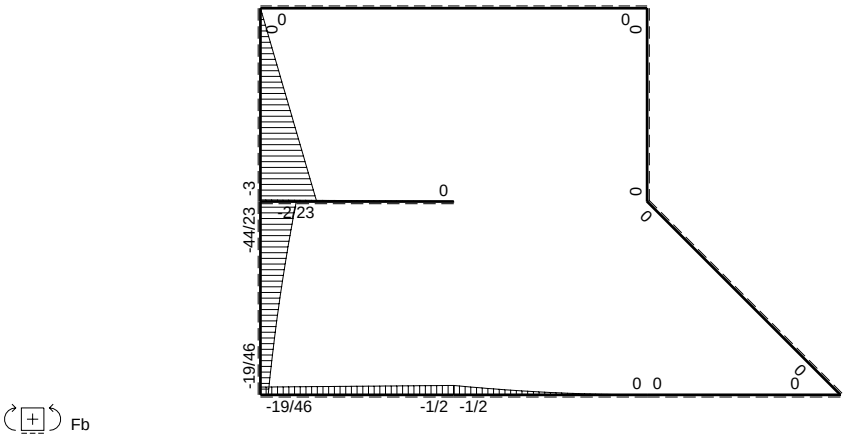
Fb
0
0
0
0
-3
0
2/23
-44/23
0
-19/46
0 0
0
-19/46
-1/2 -1/2

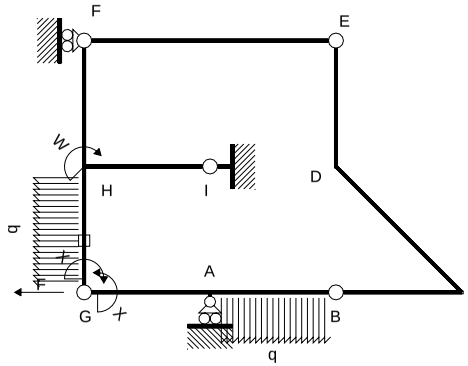

Schema di calcolo iperstatico

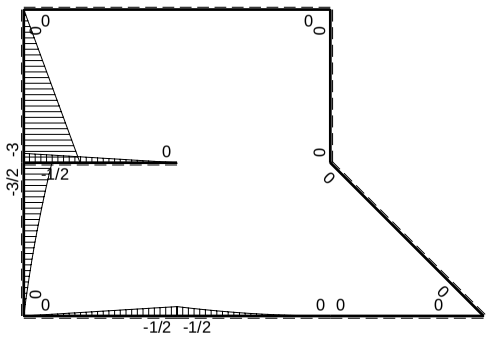

M_0 flessione da carichi assegnati

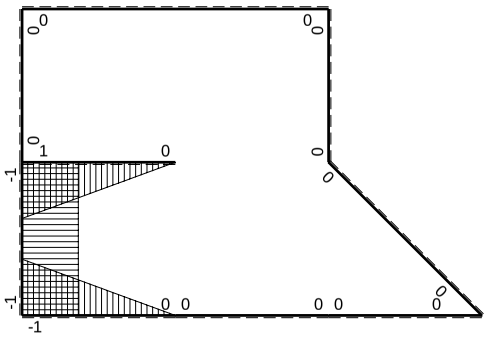

M_x flessione da iperstatica X=1

Quadro contributi PLV per iperstatica $X=W_{GA}$

→	$M_x(x)$	$M_0(x)$	M_xM_0	M_xM_x	$\int M_xM_0/EJdx$	$\int XM_xM_x/EJdx$
AB b	0	$-1/2Fb+Fx-1/2qx^2$	0	0	0	0
BA b	0	$1/2qx^2$	0	0		
BC b	0	0	0	0	0	0
CB b	0	0	0	0		
CD √2b	0	0	0	0	0	0
DE b	0	0	0	0	0	0
ED b	0	0	0	0		
EF 2b	0	0	0	0	0	0
FE 2b	0	0	0	0		
GA b	-1+x/b	-1/2Fx	$1/2Fx-1/2Fx^2/b$	$1-2x/b+x^2/b^2$	$1/12Fb^2/EJ$	1/3Xb/EJ
AG b	x/b	1/2Fb-1/2Fx	$1/2Fx-1/2Fx^2/b$	x^2/b^2		
FH b	0	-3Fx	0	0	0	0
HF b	0	3Fb-3Fx	0	0		
HI b	1-x/b	$-1/2Fb+1/2Fx$	$-1/2Fb+Fx-1/2Fx^2/b$	$1-2x/b+x^2/b^2$	$-1/6Fb^2/EJ$	1/3Xb/EJ
IH b	-x/b	$1/2Fx$	$-1/2Fx^2/b$	x^2/b^2		
HG b	-1	$-3/2Fb+2Fx-1/2qx^2$	$3/2Fb-2Fx+1/2Fx^2/b$	1	$2/3Fb^2/EJ$	Xb/EJ
GH b	1	$Fx+1/2qx^2$	$Fx+1/2Fx^2/b$	1		
HG	elongazione asta $N_{1HG}\varepsilon_{HG}L_{HG}$				$-Fb^2/EJ$	
A	molla nodo $-V_{1A}(V_{0A}+XV_{1A})/k_A$				$-3/8Fb^2/EJ$	1/4Xb/EJ
	totali				$-19/24Fb^2/EJ$	23/12Xb/EJ
	iperstatica $X=W_{GA}$				19/46Fb	

Sviluppi di calcolo iperstatica

$L^{XX}_{GA} = \int_o^b (1 - 2\,x/b + x^2/b^2)\ 1/EJ\ dx = [\ x - x^2/b + 1/3\ x^3/b^2\ ]_o^b\ 1/EJ$

$= (\ b - b + 1/3\ b\ )\ 1/EJ\ = 1/3\ b/EJ$

$L^{XX}_{AG} = \int_o^b (\ x^2/b^2\ )\ 1/EJ\ dx = [1/3\ x^3/b^2\ ]_o^b\ 1/EJ$

$= (1/3\ b\ )\ 1/EJ\ = 1/3\ b/EJ$

$L^{XX}_{HI} = \int_o^b (1 - 2\,x/b + x^2/b^2)\ 1/EJ\ dx = [\ x - x^2/b + 1/3\ x^3/b^2\ ]_o^b\ 1/EJ$

$= (\ b - b + 1/3\ b\ )\ 1/EJ\ = 1/3\ b/EJ$

$L^{XX}_{IH} = \int_o^b (\ x^2/b^2\ )\ 1/EJ\ dx = [1/3\ x^3/b^2\ ]_o^b\ 1/EJ$

$= (1/3\ b\ )\ 1/EJ\ = 1/3\ b/EJ$

$L^{XX}_{HG} = \int_o^b (1\ )\ 1/EJ\ dx = [\ x\ ]_o^b\ 1/EJ$

$= (\ b\ )\ 1/EJ\ =\ b/EJ$

$L^{XX}_{GH} = \int_o^b (1\ )\ 1/EJ\ dx = [\ x\ ]_o^b\ 1/EJ$

$= (\ b\ )\ 1/EJ\ =\ b/EJ$

$L^{Xo}_{GA} = \int_o^b (1/2\ x/b - 1/2\ x^2/b^2\ )\ Fb\ 1/EJ\ dx = [1/4\ x^2/b - 1/6\ x^3/b^2\ ]_o^b\ Fb\ 1/EJ$

$= (1/4\ b - 1/6\ b\ )\ Fb\ 1/EJ\ = 1/12\ \ Fb^2/EJ$

$L^{Xo}_{AG} = \int_o^b (1/2\ x/b - 1/2\ x^2/b^2\ )\ Fb\ 1/EJ\ dx = [1/4\ x^2/b - 1/6\ x^3/b^2\ ]_o^b\ Fb\ 1/EJ$

$= (1/4\ b - 1/6\ b\ )\ Fb\ 1/EJ\ = 1/12\ \ Fb^2/EJ$

$L^{Xo}_{HI} = \int_o^b (-1/2 + x/b - 1/2\ x^2/b^2\ )\ Fb\ 1/EJ\ dx = [-1/2\ x + 1/2\ x^2/b - 1/6\ x^3/b^2\ ]_o^b\ Fb\ 1/EJ$

$= (-1/2\ b + 1/2\ b - 1/6\ b\ )\ Fb\ 1/EJ\ = -1/6\ \ Fb^2/EJ$

$L^{Xo}_{IH} = \int_o^b (-1/2\ x^2/b^2\ )\ Fb\ 1/EJ\ dx = [-1/6\ x^3/b^2\ ]_o^b\ Fb\ 1/EJ$

$= (-1/6\ b\ )\ Fb\ 1/EJ\ = -1/6\ \ Fb^2/EJ$

$L^{Xo}_{HG} = \int_o^b (3/2 - 2\,x/b + 1/2\ x^2/b^2\ )\ Fb\ 1/EJ\ dx - 1\ \ (-1)\ \ (-1)\ \ Fb^2/EJ$

$= [3/2\ x - x^2/b + 1/6\ x^3/b^2\ ]_o^b\ Fb\ 1/EJ\ - 1\ \ (-1)\ \ (-1)\ \ Fb^2/EJ$

$= (3/2\ b - b + 1/6\ b\ )\ Fb\ 1/EJ\ - 1\ \ (-1)\ \ (-1)\ \ Fb^2/EJ = -1/3\ \ Fb^2/EJ$

$L^{Xo}_{GH} = \int_o^b (\ x/b + 1/2\ x^2/b^2\ )\ Fb\ 1/EJ\ dx - 1\ \ (-1)\ \ (-1)\ \ Fb^2/EJ$

$= [1/2\ x^2/b + 1/6\ x^3/b^2\ ]_o^b\ Fb\ 1/EJ\ - 1\ \ (-1)\ \ (-1)\ \ Fb^2/EJ$

$= (1/2\ b + 1/6\ b\ )\ Fb\ 1/EJ\ - 1\ \ (-1)\ \ (-1)\ \ Fb^2/EJ = -1/3\ \ Fb^2/EJ$

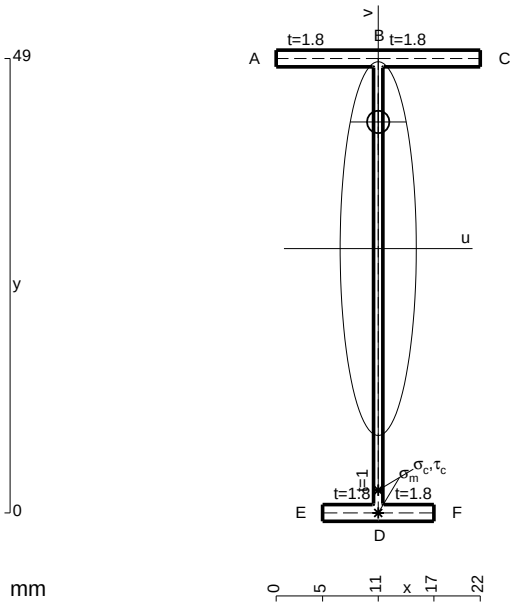

A = 110.2 mm^2
J_u = 44775. mm^4
J_v = 1856. mm^4
J_t = 82.43 mm^4
y_o = 13.66 mm
y_g = 28.5 mm
T_y = -480. N
M_x = -302400. Nmm
x_m = 11. mm
v_m = -28.5 mm
$\sigma_m = -Mv/J_u$ = -192.5 N/mm^2
y_c = 3. mm
u_c = -11. mm
v_c = -25.5 mm
$\sigma_c = -Mv/J_u$ = -192.5 N/mm^2
$\tau_c = TS^*/tJ_u$ = 6.6 N/mm^2
$\tau_g = TS^*/tJ_u$ = 6.6 N/mm^2
t_c = 160. mm
$\sigma_o = \sqrt{\sigma^2 + 3\tau^2}$ = 192.8 N/mm^2

ESΣ05.xxxx.135

@ Adolfo Zavelani Rossi, Politecnico di Milano, vers.27.03.13 01.12.25

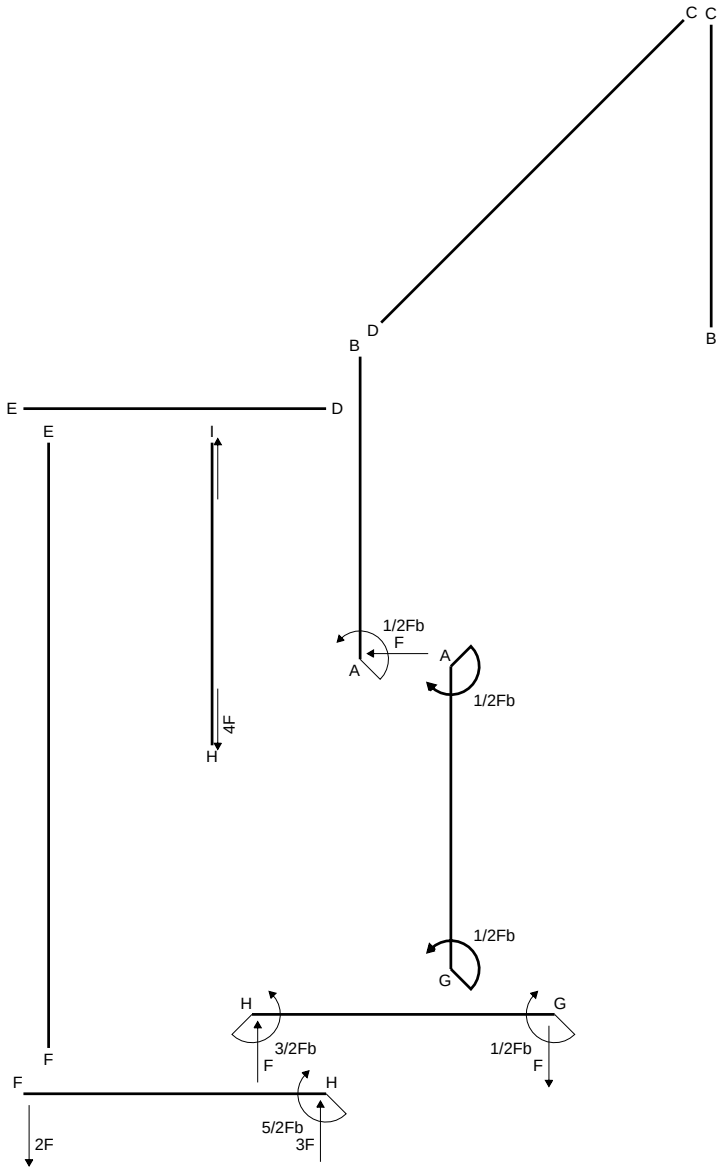
C C
B
D
B
E
D
E
I
4F
H
1/2Fb
F
A
A
1/2Fb
1/2Fb
G
H
G
3/2Fb
F
1/2Fb
F
F
H
5/2Fb
3F
F
2F

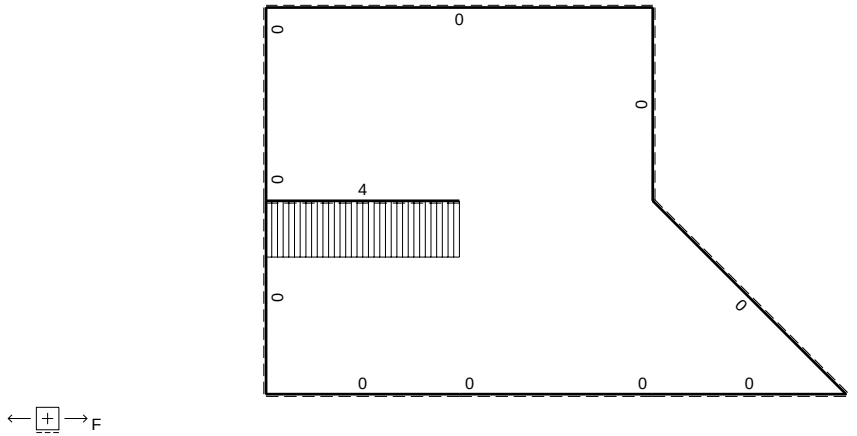
0
0
0
0
4
0
0
0
0
0
0
0
F

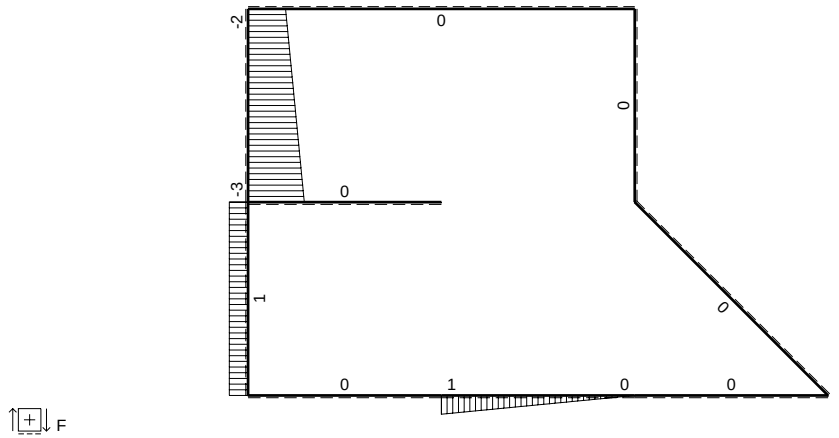
-2
0
0
-3
0
1
0
0
1
0
0
F

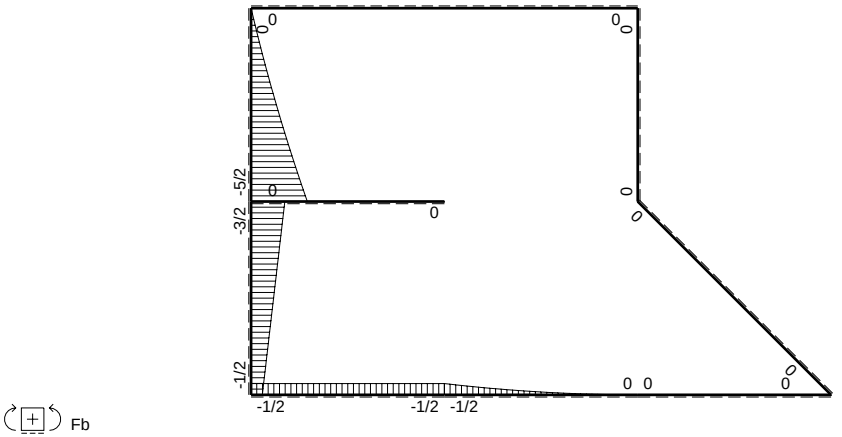
0
0
0
0
-5/2
-3/2
0
0
0
0
-1/2
0 0
0
-1/2
-1/2 -1/2
Fb

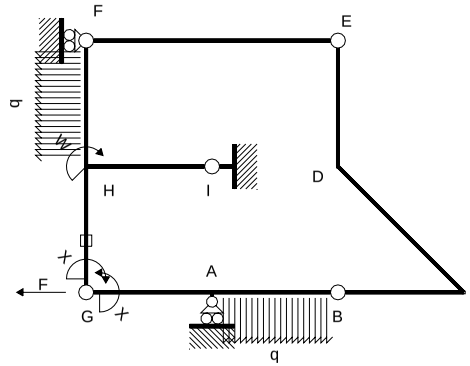

Schema di calcolo iperstatico

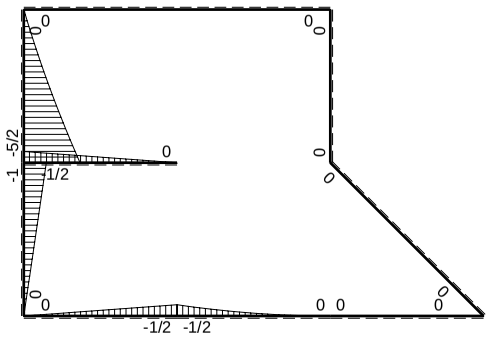

M_0 flessione da carichi assegnati

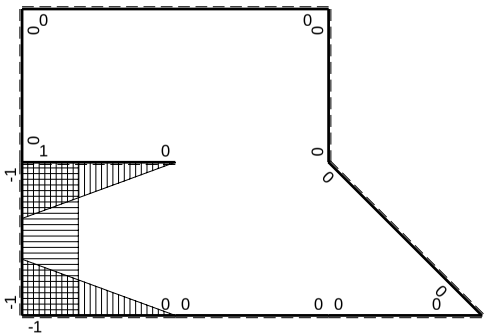

M_x flessione da iperstatica X=1

Quadro contributi PLV per iperstatica $X=W_{GA}$

→	$M_x(x)$	$M_0(x)$	M_xM_0	M_xM_x	$\int M_xM_0/EJdx$	$\int XM_xM_x/EJdx$
AB b	0	$-1/2Fb+Fx-1/2qx^2$	0	0	0	0
BA b	0	$1/2qx^2$	0	0		
BC b	0	0	0	0	0	0
CB b	0	0	0	0		
CD √2b	0	0	0	0	0	0
DE b	0	0	0	0	0	0
ED b	0	0	0	0		
EF 2b	0	0	0	0	0	0
FE 2b	0	0	0	0		
GA b	$-1+x/b$	$-1/2Fx$	$1/2Fx-1/2Fx^2/b$	$1-2x/b+x^2/b^2$	$1/12Fb^2/EJ$	$1/3Xb/EJ$
AG b	x/b	$1/2Fb-1/2Fx$	$1/2Fx-1/2Fx^2/b$	x^2/b^2		
FH b	0	$-2Fx-1/2qx^2$	0	0	0	0
HF b	0	$5/2Fb-3Fx+1/2qx^2$	0	0		
HI b	$1-x/b$	$-1/2Fb+1/2Fx$	$-1/2Fb+Fx-1/2Fx^2/b$	$1-2x/b+x^2/b^2$	$-1/6Fb^2/EJ$	$1/3Xb/EJ$
IH b	$-x/b$	$1/2Fx$	$-1/2Fx^2/b$	x^2/b^2		
HG b	-1	$-Fb+Fx$	$Fb-Fx$	1	$1/2Fb^2/EJ$	Xb/EJ
GH b	1	Fx	Fx	1		
HG	elongazione asta $N_{1HG}\varepsilon_{HG}L_{HG}$				$-Fb^2/EJ$	
A	molla nodo $-V_{1A}(V_{0A}+XV_{1A})/k_A$				$-3/8Fb^2/EJ$	$1/4Xb/EJ$
	totali				$-23/24Fb^2/EJ$	$23/12Xb/EJ$
	iperstatica $X=W_{GA}$				$1/2Fb$	

Sviluppi di calcolo iperstatica

$L^{XX}_{GA} = \int_o^b (1 - 2\,x/b + x^2/b^2)\ 1/EJ\ dx = [\,x - x^2/b + 1/3\,x^3/b^2\,]_o^b\ 1/EJ$

$= (\,b - b + 1/3\,b\,)\ 1/EJ = 1/3\ b/EJ$

$L^{XX}_{AG} = \int_o^b (\,x^2/b^2\,)\ 1/EJ\ dx = [1/3\,x^3/b^2\,]_o^b\ 1/EJ$

$= (1/3\,b\,)\ 1/EJ = 1/3\ b/EJ$

$L^{XX}_{HI} = \int_o^b (1 - 2\,x/b + x^2/b^2)\ 1/EJ\ dx = [\,x - x^2/b + 1/3\,x^3/b^2\,]_o^b\ 1/EJ$

$= (\,b - b + 1/3\,b\,)\ 1/EJ = 1/3\ b/EJ$

$L^{XX}_{IH} = \int_o^b (\,x^2/b^2\,)\ 1/EJ\ dx = [1/3\,x^3/b^2\,]_o^b\ 1/EJ$

$= (1/3\,b\,)\ 1/EJ = 1/3\ b/EJ$

$L^{XX}_{HG} = \int_o^b (1)\ 1/EJ\ dx = [\,x\,]_o^b\ 1/EJ$

$= (\,b\,)\ 1/EJ = b/EJ$

$L^{XX}_{GH} = \int_o^b (1)\ 1/EJ\ dx = [\,x\,]_o^b\ 1/EJ$

$= (\,b\,)\ 1/EJ = b/EJ$

$L^{Xo}_{GA} = \int_o^b (1/2\,x/b - 1/2\,x^2/b^2)\ Fb\ 1/EJ\ dx = [1/4\,x^2/b - 1/6\,x^3/b^2\,]_o^b\ Fb\ 1/EJ$

$= (1/4\,b - 1/6\,b\,)\ Fb\ 1/EJ = 1/12\ Fb^2/EJ$

$L^{Xo}_{AG} = \int_o^b (1/2\,x/b - 1/2\,x^2/b^2\,)\ Fb\ 1/EJ\ dx = [1/4\,x^2/b - 1/6\,x^3/b^2\,]_o^b\ Fb\ 1/EJ$

$= (1/4\,b - 1/6\,b\,)\ Fb\ 1/EJ = 1/12\ Fb^2/EJ$

$L^{Xo}_{HI} = \int_o^b (-1/2 + x/b - 1/2\,x^2/b^2\,)\ Fb\ 1/EJ\ dx = [-1/2\,x + 1/2\,x^2/b - 1/6\,x^3/b^2\,]_o^b\ Fb\ 1/EJ$

$= (-1/2\,b + 1/2\,b - 1/6\,b\,)\ Fb\ 1/EJ = -1/6\ Fb^2/EJ$

$L^{Xo}_{IH} = \int_o^b (-1/2\,x^2/b^2\,)\ Fb\ 1/EJ\ dx = [-1/6\,x^3/b^2\,]_o^b\ Fb\ 1/EJ$

$= (-1/6\,b\,)\ Fb\ 1/EJ = -1/6\ Fb^2/EJ$

$L^{Xo}_{HG} = \int_o^b (1 - x/b\,)\ Fb\ 1/EJ\ dx - 1\ \ (-1)\ \ (-1)\ \ Fb^2/EJ = [\,x - 1/2\,x^2/b\,]_o^b\ Fb\ 1/EJ\ \ - 1\ \ (-1)\ \ (-1)\ \ Fb^2/EJ$

$= (\,b - 1/2\,b\,)\ Fb\ 1/EJ\ \ - 1\ \ (-1)\ \ (-1)\ \ Fb^2/EJ = -1/2\ \ Fb^2/EJ$

$L^{Xo}_{GH} = \int_o^b (\,x/b\,)\ Fb\ 1/EJ\ dx - 1\ \ (-1)\ \ (-1)\ \ Fb^2/EJ = [1/2\,x^2/b\,]_o^b\ Fb\ 1/EJ\ \ - 1\ \ (-1)\ \ (-1)\ \ Fb^2/EJ$

$= (1/2\,b\,)\ Fb\ 1/EJ\ \ - 1\ \ (-1)\ \ (-1)\ \ Fb^2/EJ = -1/2\ \ Fb^2/EJ$

PROCEDIMENTO E RISULTATI 991200 ESΣ05.xxxx.136

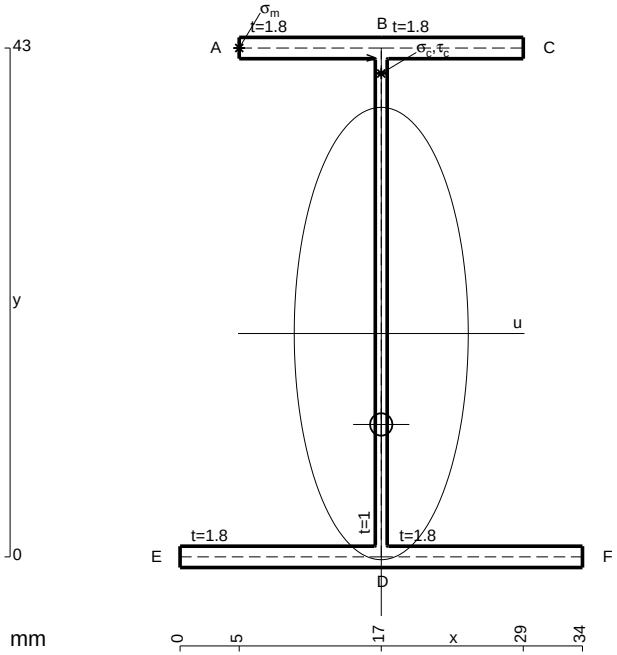

$A = 147.4\ mm^2$

$J_u = 53868.\ mm^4$

$J_v = 7969.\ mm^4$

$J_t = 127.1\ mm^4$

$y_o = -7.686\ mm$

$y_g = 18.87\ mm$

$T_y = -930.\ N$

$M_x = -457250.\ Nmm$

$x_m = 5.\ mm$

$y_m = 43.\ mm$

$u_m = -12.\ mm$

$v_m = 24.13\ mm$

$\sigma_m = -Mv/J_u = 204.8\ N/mm^2$

$x_c = 17.\ mm$

$y_c = 43.\ mm$

$v_c = 24.13\ mm$

$\sigma_c = -Mv/J_u = 204.8\ N/mm^2$

$\tau_c = TS^*/tJ_u = 17.99\ N/mm^2$

$\tau_g = TS^*/tJ_u = 17.99\ N/mm^2$

$t_c = 310.\ mm$

$\sigma_o = \sqrt{\sigma^2 + 3\tau^2} = 207.1\ N/mm^2$

@ Adolfo Zavelani Rossi, Politecnico di Milano, vers.27.03.13 01.12.25

ESΣ05.xxxx.136

@ Adolfo Zavelani Rossi, Politecnico di Milano, vers.27.03.13 01.12.25

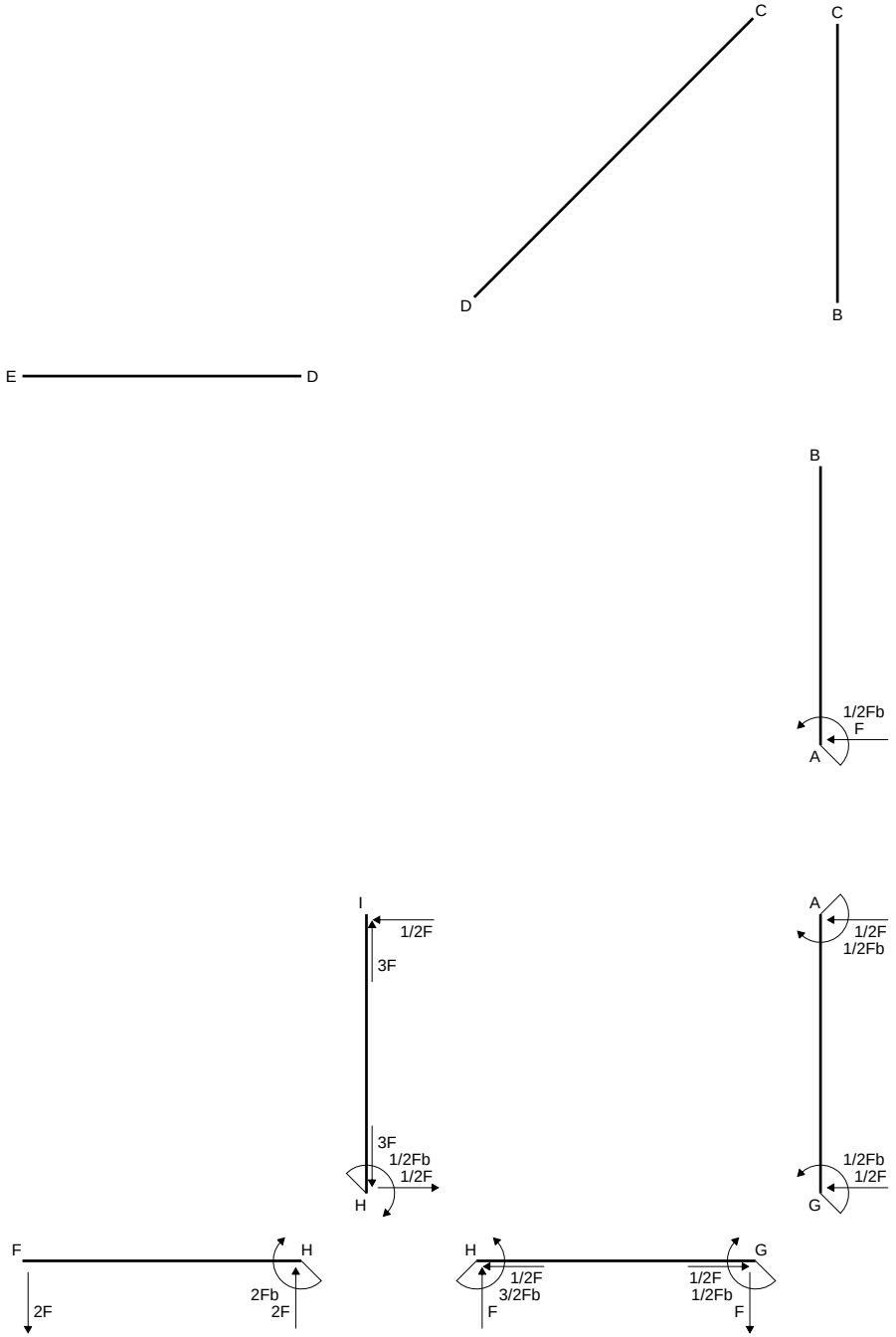
C
C
D
B
E
D
B
E
1/2Fb
F
A
F
I
1/2F
3F
3F
1/2Fb
1/2F
H
A
1/2F
1/2Fb
1/2Fb
1/2F
G
F
H
2Fb
2F
2F
H
G
1/2F
3/2Fb
F
1/2F
1/2Fb
F

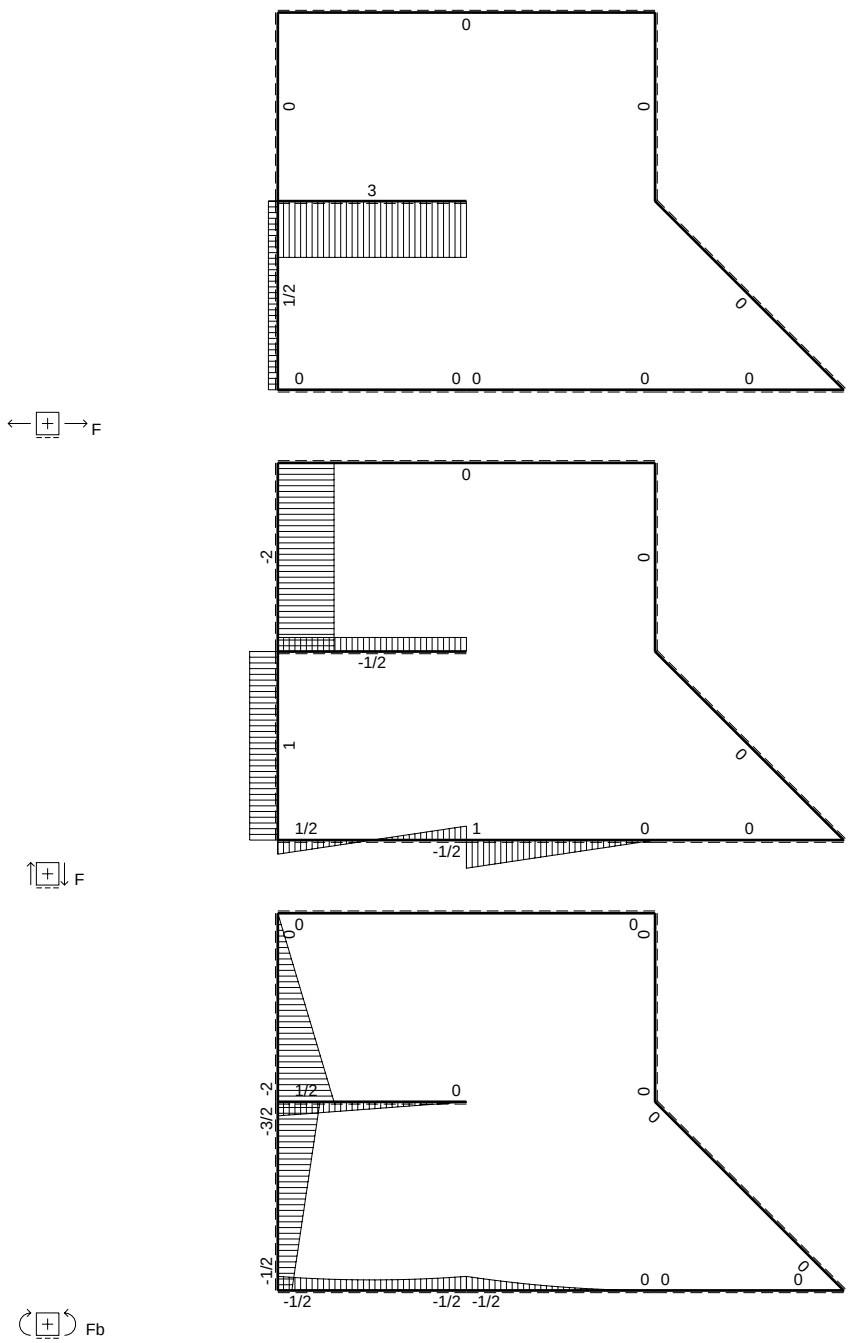
0
0
0
3
1/2
0
0 0
0
0
F
0
-2
0
-1/2
1
0
1/2
1
0
0
-1/2
F
0
0
0
0
-3/2
-2
1/2
0
0
0
-1/2
0 0
0
-1/2
-1/2 -1/2
Fb

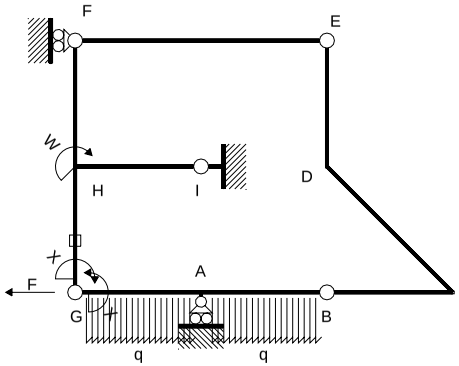

Schema di calcolo iperstatico

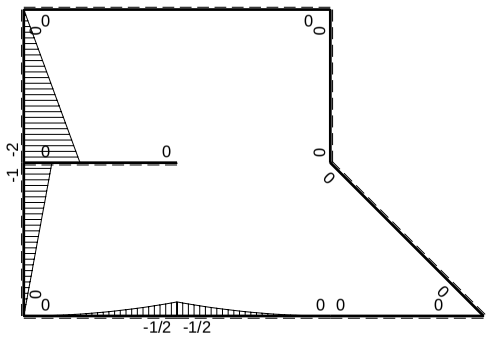

M_0 flessione da carichi assegnati

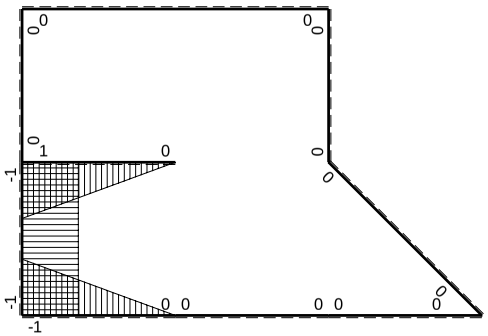

M_x flessione da iperstatica X=1

Quadro contributi PLV per iperstatica $X=W_{GA}$

→	$M_x(x)$	$M_o(x)$	M_xM_o	M_xM_x	$\int M_xM_o/EJdx$	$\int XM_xM_x/EJdx$
AB b	0	$-1/2Fb+Fx-1/2qx^2$	0	0	0	0
BA b	0	$1/2qx^2$	0	0		
BC b	0	0	0	0	0	0
CB b	0	0	0	0		
CD √2b	0	0	0	0	0	0
DE b	0	0	0	0	0	0
ED b	0	0	0	0		
EF 2b	0	0	0	0	0	0
FE 2b	0	0	0	0		
GA b	-1+x/b	$-1/2qx^2$	$1/2Fx^2/b-1/2qx^3/b$	$1-2x/b+x^2/b^2$	$1/24Fb^2/EJ$	1/3Xb/EJ
AG b	x/b	$1/2Fb-Fx+1/2qx^2$	$1/2Fx-Fx^2/b+1/2qx^3/b$	x^2/b^2		
FH b	0	-2Fx	0	0	0	0
HF b	0	2Fb-2Fx	0	0		
HI b	1-x/b	0	0	$1-2x/b+x^2/b^2$	0	1/3Xb/EJ
IH b	-x/b	0	0	x^2/b^2		
HG b	-1	-Fb+Fx	Fb-Fx	1	$1/2Fb^2/EJ$	Xb/EJ
GH b	1	Fx	Fx	1		
HG	elongazione asta $N_{1HG}\varepsilon_{HG}L_{HG}$				$-Fb^2/EJ$	
A	molla nodo $-V_{1A}(V_{0A}+XV_{1A})/k_A$				$-1/2Fb^2/EJ$	1/4Xb/EJ
	totali				$-23/24Fb^2/EJ$	23/12Xb/EJ
	iperstatica $X=W_{GA}$				1/2Fb	

Sviluppi di calcolo iperstatica

$L^{XX}_{GA} = \int_o^b (1 - 2\,x/b + x^2/b^2)\ 1/EJ\ dx = [\ x - x^2/b + 1/3\ x^3/b^2\ ]_o^b\ 1/EJ$

$= (\ b - b + 1/3\ b\ )\ 1/EJ\ = 1/3\ b/EJ$

$L^{XX}_{AG} = \int_o^b (\ x^2/b^2\ )\ 1/EJ\ dx = [1/3\ x^3/b^2\ ]_o^b\ 1/EJ$

$= (1/3\ b\ )\ 1/EJ\ = 1/3\ b/EJ$

$L^{XX}_{HI} = \int_o^b (1 - 2\,x/b + x^2/b^2)\ 1/EJ\ dx = [\ x - x^2/b + 1/3\ x^3/b^2\ ]_o^b\ 1/EJ$

$= (\ b - b + 1/3\ b\ )\ 1/EJ\ = 1/3\ b/EJ$

$L^{XX}_{IH} = \int_o^b (\ x^2/b^2\ )\ 1/EJ\ dx = [1/3\ x^3/b^2\ ]_o^b\ 1/EJ$

$= (1/3\ b\ )\ 1/EJ\ = 1/3\ b/EJ$

$L^{XX}_{HG} = \int_o^b (1\ )\ 1/EJ\ dx = [\ x\ ]_o^b\ 1/EJ$

$= (\ b\ )\ 1/EJ\ =\ b/EJ$

$L^{XX}_{GH} = \int_o^b (1\ )\ 1/EJ\ dx = [\ x\ ]_o^b\ 1/EJ$

$= (\ b\ )\ 1/EJ\ =\ b/EJ$

$L^{Xo}_{GA} = \int_o^b (1/2\ x^2/b^2 - 1/2\ x^3/b^3\ )\ Fb\ 1/EJ\ dx = [1/6\ x^3/b^2 - 1/8\ x^4/b^3\ ]_o^b\ Fb\ 1/EJ$

$= (1/6\ b - 1/8\ b\ )\ Fb\ 1/EJ\ = 1/24\ Fb^2/EJ$

$L^{Xo}_{AG} = \int_o^b (1/2\ x/b - x^2/b^2 + 1/2\ x^3/b^3\ )\ Fb\ 1/EJ\ dx = [1/4\ x^2/b - 1/3\ x^3/b^2 + 1/8\ x^4/b^3\ ]_o^b\ Fb\ 1/EJ$

$= (1/4\ b - 1/3\ b + 1/8\ b\ )\ Fb\ 1/EJ\ = 1/24\ Fb^2/EJ$

$L^{Xo}_{HG} = \int_o^b (1 - x/b\ )\ Fb\ 1/EJ\ dx - 1\ \ (-1)\ \ (-1)\ \ Fb^2/EJ = [\ x - 1/2\ x^2/b\ ]_o^b\ Fb\ 1/EJ\ -\ 1\ \ (-1)\ \ (-1)\ \ Fb^2/EJ$

$= (\ b - 1/2\ b\ )\ Fb\ 1/EJ\ -\ 1\ \ (-1)\ \ (-1)\ \ Fb^2/EJ = -1/2\ \ Fb^2/EJ$

$L^{Xo}_{GH} = \int_o^b (\ x/b\ )\ Fb\ 1/EJ\ dx - 1\ \ (-1)\ \ (-1)\ \ Fb^2/EJ = [1/2\ x^2/b\ ]_o^b\ Fb\ 1/EJ\ -\ 1\ \ (-1)\ \ (-1)\ \ Fb^2/EJ$

$= (1/2\ b\ )\ Fb\ 1/EJ\ -\ 1\ \ (-1)\ \ (-1)\ \ Fb^2/EJ = -1/2\ \ Fb^2/EJ$

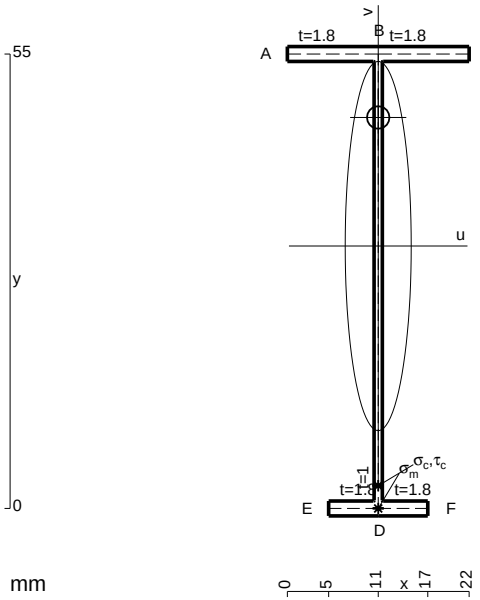

A = 116.2 mm^2
J_u = 58038. mm^4
J_v = 1856. mm^4
J_t = 84.43 mm^4
y_o = 15.56 mm
y_g = 31.76 mm
T_y = -500. N
M_x = -395000. Nmm
x_m = 11. mm
v_m = -31.76 mm
$\sigma_m = -Mv/J_u$ = -216.2 N/mm^2
y_c = 3. mm
u_c = -11. mm
v_c = -28.76 mm
$\sigma_c = -Mv/J_u$ = -216.2 N/mm^2
$\tau_c = TS^*/tJ_u$ = 5.91 N/mm^2
$\tau_g = TS^*/tJ_u$ = 5.91 N/mm^2
t_c = 250. mm
$\sigma_o = \sqrt{\sigma^2 + 3\tau^2}$ = 216.4 N/mm^2

ESΣ05.xxxx.137

@ Adolfo Zavelani Rossi, Politecnico di Milano, vers.27.03.13 01.12.25

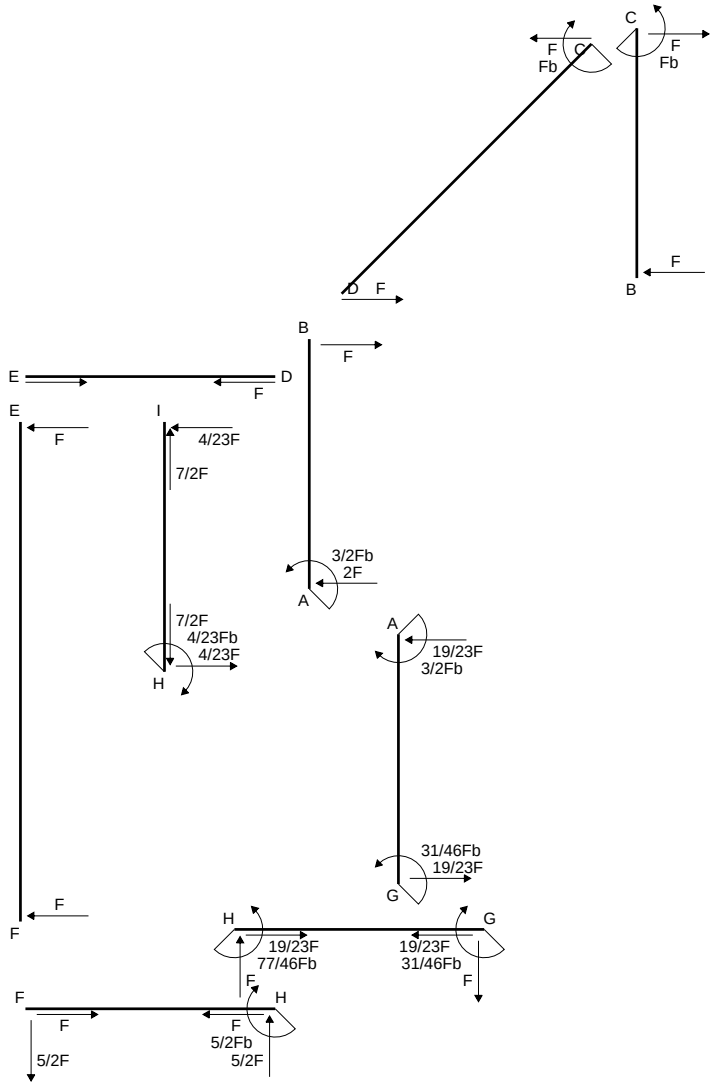
C
F
Fb
C
F
Fb
D
F
B
F
B
F
E
D
F
E
F
I
4/23F
7/2F
3/2Fb
2F
A
7/2F
4/23Fb
4/23F
H
A
19/23F
3/2Fb
31/46Fb
19/23F
G
F
F
H
G
19/23F
77/46Fb
19/23F
31/46Fb
F
F
F
H
F
F
5/2Fb
5/2F
5/2F

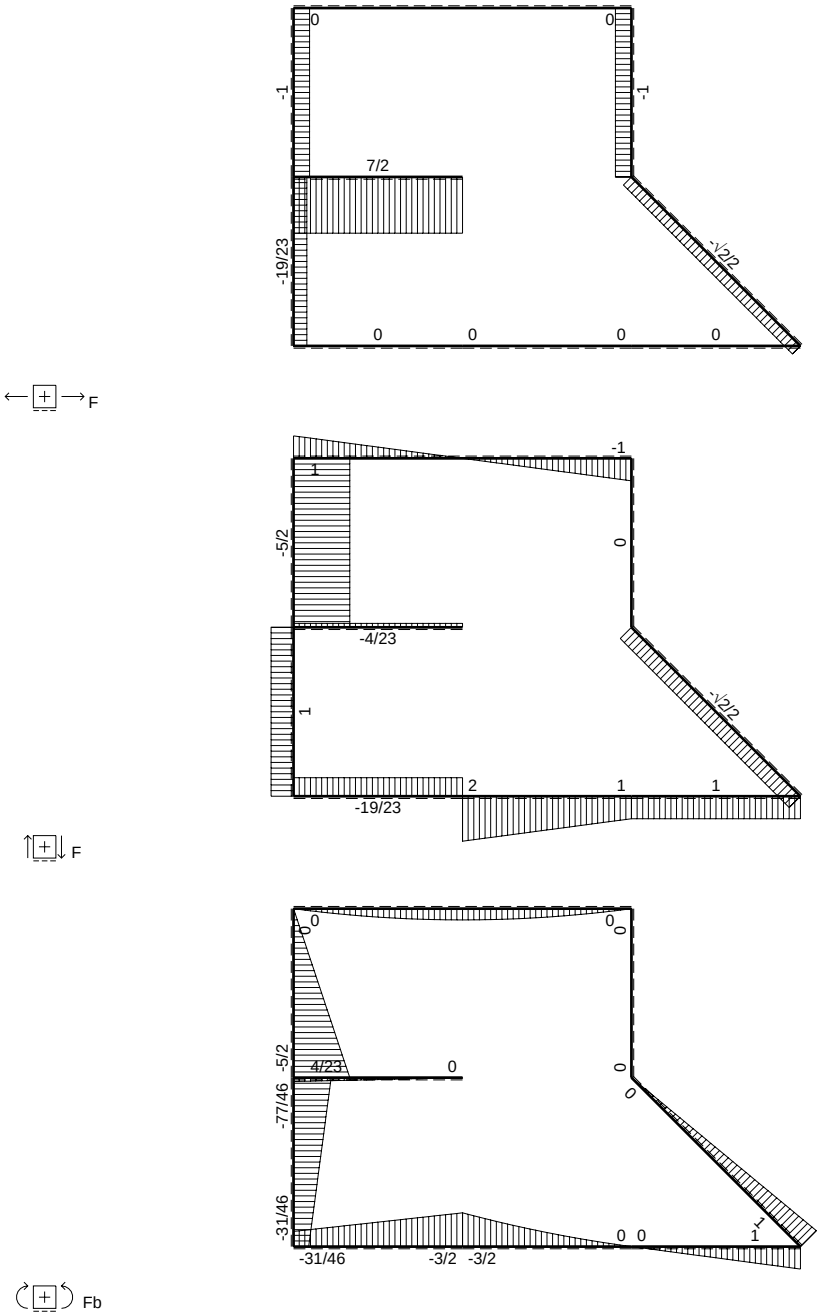
0
0
-1
-1
7/2
-19/23
-√2/2
0
0
0
0
F
-1
1
-5/2
0
-4/23
1
-√2/2
2
1
1
-19/23
F
0
0
0
0
-5/2
4/23
0
0
-77/46
0
-31/46
0 0
1
1
-31/46
-3/2
-3/2
Fb

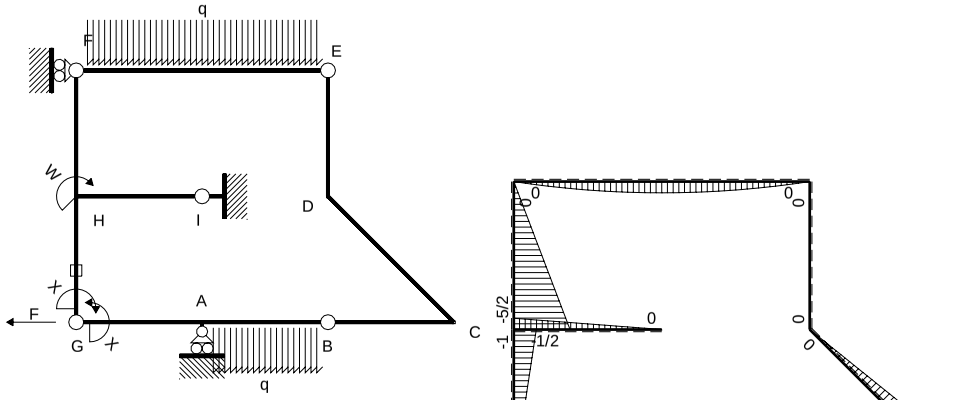

M_0 flessione da carichi assegnati

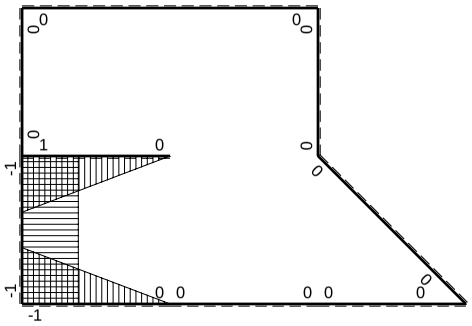

M_x flessione da iperstatica X=1

Quadro contributi PLV per iperstatica $X=W_{GA}$

→	$M_x(x)$	$M_0(x)$	M_xM_0	M_xM_x	$\int M_xM_0/EJdx$	$\int XM_xM_x/EJdx$
AB b	0	$-3/2Fb+2Fx-1/2qx^2$	0	0	0	0
BA b	0	$Fx+1/2qx^2$	0	0		
BC b	0	Fx	0	0	0	0
CB b	0	-Fb+Fx	0	0		
CD $\sqrt{2}$b	0	Fb-$\sqrt{2}$/2Fx	0	0	0	0
DE b	0	0	0	0	0	0
ED b	0	0	0	0		
EF 2b	0	$-Fx+1/2qx^2$	0	0	0	0
FE 2b	0	$Fx-1/2qx^2$	0	0		
GA b	-1+x/b	-3/2Fx	$3/2Fx-3/2Fx^2/b$	$1-2x/b+x^2/b^2$	$1/4Fb^2/EJ$	1/3Xb/EJ
AG b	x/b	3/2Fb-3/2Fx	$3/2Fx-3/2Fx^2/b$	x^2/b^2		
FH b	0	-5/2Fx	0	0	0	0
HF b	0	5/2Fb-5/2Fx	0	0		
HI b	1-x/b	$-1/2Fb+1/2Fx$	$-1/2Fb+Fx-1/2Fx^2/b$	$1-2x/b+x^2/b^2$	$-1/6Fb^2/EJ$	1/3Xb/EJ
IH b	-x/b	1/2Fx	$-1/2Fx^2/b$	x^2/b^2		
HG b	-1	-Fb+Fx	Fb-Fx	1	$1/2Fb^2/EJ$	Xb/EJ
GH b	1	Fx	Fx	1		
HG	elongazione asta $N_{1HG}\varepsilon_{HG}L_{HG}$				$-Fb^2/EJ$	
A	molla nodo $-V_{1A}(V_{0A}+XV_{1A})/k_A$				$-7/8Fb^2/EJ$	1/4Xb/EJ
	totali				$-31/24Fb^2/EJ$	23/12Xb/EJ
	iperstatica $X=W_{GA}$				31/46Fb	

Sviluppi di calcolo iperstatica

$L^{XX}_{GA} = \int_o^b (1 - 2\,x/b + x^2/b^2)\ 1/EJ\ dx = [\,x - x^2/b + 1/3\,x^3/b^2\,]_o^b\ 1/EJ$

$= (\,b - b + 1/3\,b\,)\ 1/EJ\ = 1/3\ b/EJ$

$L^{XX}_{AG} = \int_o^b (\,x^2/b^2\,)\ 1/EJ\ dx = [1/3\,x^3/b^2\,]_o^b\ 1/EJ$

$= (1/3\,b\,)\ 1/EJ\ = 1/3\ b/EJ$

$L^{XX}_{HI} = \int_o^b (1 - 2\,x/b + x^2/b^2)\ 1/EJ\ dx = [\,x - x^2/b + 1/3\,x^3/b^2\,]_o^b\ 1/EJ$

$= (\,b - b + 1/3\,b\,)\ 1/EJ\ = 1/3\ b/EJ$

$L^{XX}_{IH} = \int_o^b (\,x^2/b^2\,)\ 1/EJ\ dx = [1/3\,x^3/b^2\,]_o^b\ 1/EJ$

$= (1/3\,b\,)\ 1/EJ\ = 1/3\ b/EJ$

$L^{XX}_{HG} = \int_o^b (1)\ 1/EJ\ dx = [\,x\,]_o^b\ 1/EJ$

$= (\,b\,)\ 1/EJ\ = b/EJ$

$L^{XX}_{GH} = \int_o^b (1)\ 1/EJ\ dx = [\,x\,]_o^b\ 1/EJ$

$= (\,b\,)\ 1/EJ\ = b/EJ$

$L^{Xo}_{GA} = \int_o^b (3/2\,x/b - 3/2\,x^2/b^2)\ Fb\ 1/EJ\ dx = [3/4\,x^2/b - 1/2\,x^3/b^2\,]_o^b\ Fb\ 1/EJ$

$= (3/4\,b - 1/2\,b\,)\ Fb\ 1/EJ\ = 1/4\ Fb^2/EJ$

$L^{Xo}_{AG} = \int_o^b (3/2\,x/b - 3/2\,x^2/b^2)\ Fb\ 1/EJ\ dx = [3/4\,x^2/b - 1/2\,x^3/b^2\,]_o^b\ Fb\ 1/EJ$

$= (3/4\,b - 1/2\,b\,)\ Fb\ 1/EJ\ = 1/4\ Fb^2/EJ$

$L^{Xo}_{HI} = \int_o^b (-1/2 + x/b - 1/2\,x^2/b^2)\ Fb\ 1/EJ\ dx = [-1/2\,x + 1/2\,x^2/b - 1/6\,x^3/b^2\,]_o^b\ Fb\ 1/EJ$

$= (-1/2\,b + 1/2\,b - 1/6\,b\,)\ Fb\ 1/EJ\ = -1/6\ Fb^2/EJ$

$L^{Xo}_{IH} = \int_o^b (-1/2\,x^2/b^2)\ Fb\ 1/EJ\ dx = [-1/6\,x^3/b^2\,]_o^b\ Fb\ 1/EJ$

$= (-1/6\,b\,)\ Fb\ 1/EJ\ = -1/6\ Fb^2/EJ$

$L^{Xo}_{HG} = \int_o^b (1 - x/b\,)\ Fb\ 1/EJ\ dx - 1\ \ (-1)\ \ (-1)\ \ Fb^2/EJ = [\,x - 1/2\,x^2/b\,]_o^b\ Fb\ 1/EJ\ \ - 1\ \ (-1)\ \ (-1)\ \ Fb^2/EJ$

$= (\,b - 1/2\,b\,)\ Fb\ 1/EJ\ \ - 1\ \ (-1)\ \ (-1)\ \ Fb^2/EJ = -1/2\ \ Fb^2/EJ$

$L^{Xo}_{GH} = \int_o^b (\,x/b\,)\ Fb\ 1/EJ\ dx - 1\ \ (-1)\ \ (-1)\ \ Fb^2/EJ = [1/2\,x^2/b\,]_o^b\ Fb\ 1/EJ\ \ - 1\ \ (-1)\ \ (-1)\ \ Fb^2/EJ$

$= (1/2\,b\,)\ Fb\ 1/EJ\ \ - 1\ \ (-1)\ \ (-1)\ \ Fb^2/EJ = -1/2\ \ Fb^2/EJ$

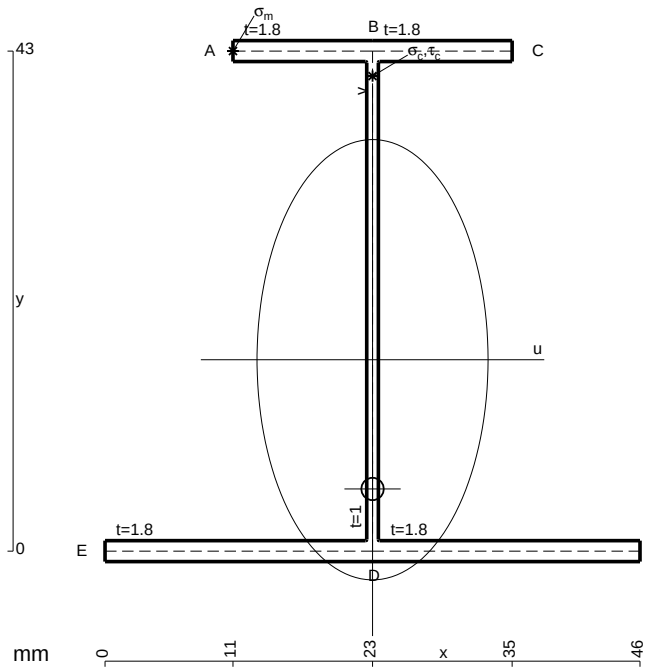

A = 169. mm^2
J_u = 60580. mm^4
J_v = 16674. mm^4
J_t = 150.4 mm^4
y_o = -11.11 mm
y_g = 16.46 mm
N = -320. N
T_y = -800. N
M_x = -528000. Nmm
x_m = 11. mm
y_m = 43. mm
u_m = -12. mm
v_m = 26.54 mm
$\sigma_m = N/A - Mv/J_u$ = 229.4 N/mm^2
x_c = 23. mm
y_c = 43. mm
v_c = 26.54 mm
$\sigma_c = N/A - Mv/J_u$ = 229.4 N/mm^2
$\tau_c = TS^*/tJ_u$ = 15.14 N/mm^2
$\tau_g = TS^*/tJ_u$ = 15.14 N/mm^2
t_c = 320. mm
$\sigma_o = \sqrt{\sigma^2 + 3\tau^2}$ = 230.9 N/mm^2

ESΣ05.xxxx.138

@ Adolfo Zavelani Rossi, Politecnico di Milano, vers.27.03.13 01.12.25

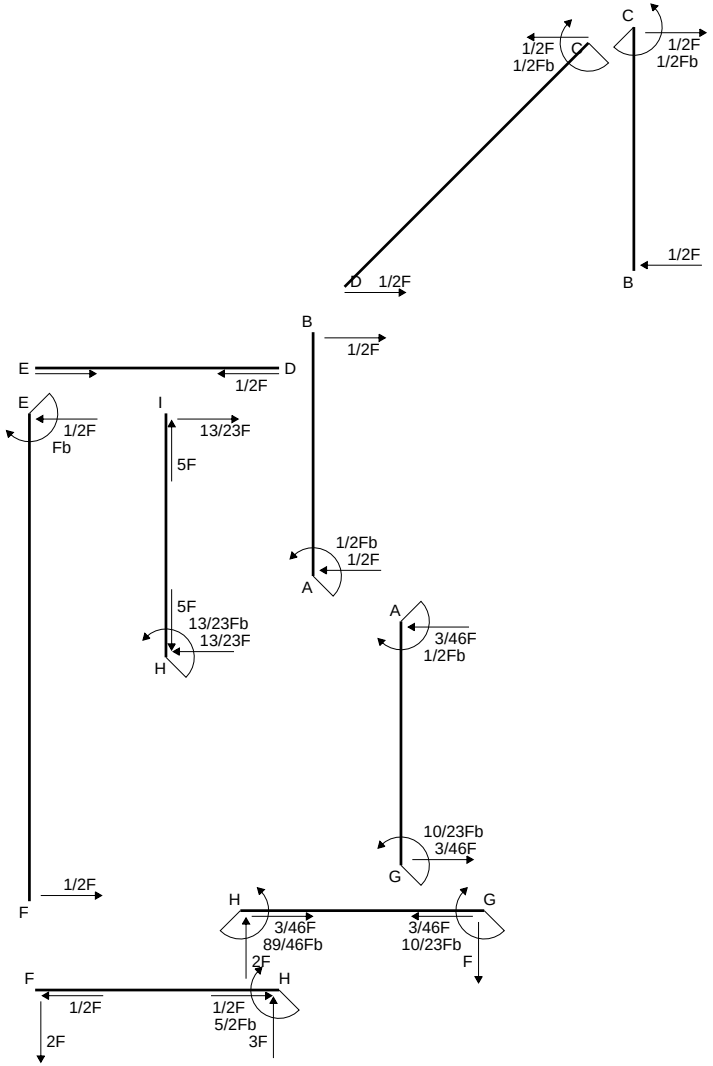
C
1/2F
1/2Fb
C
1/2F
1/2Fb
1/2F
D 1/2F
B
B
1/2F
E
D
1/2F
E
1/2F
Fb
I
13/23F
5F
1/2Fb
1/2F
A
5F
13/23Fb
13/23F
H
A
3/46F
1/2Fb
10/23Fb
3/46F
G
1/2F
F
H
G
3/46F
89/46Fb
2F
3/46F
10/23Fb
F
F
H
1/2F
1/2F
5/2Fb
3F
2F

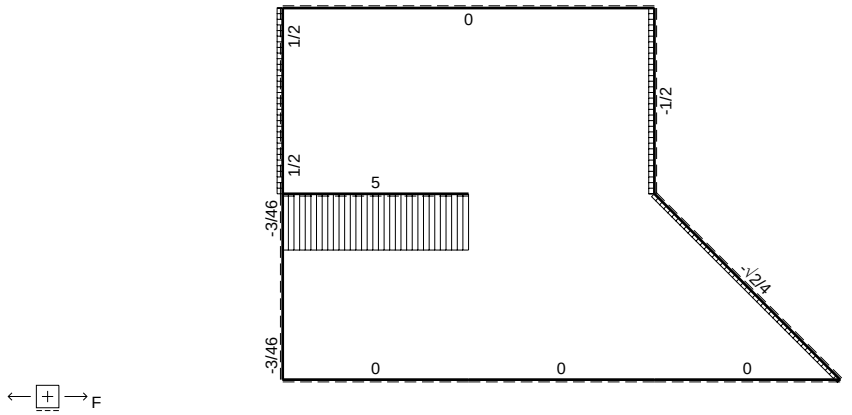
F
0
1/2
-1/2
1/2
5
-3/46
-1/2
-3/46
0
0
0

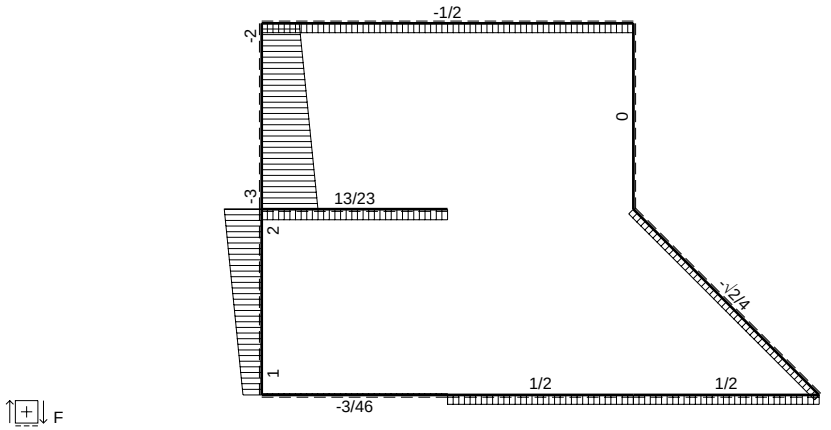
F
-1/2
-2
0
-3
13/23
2
-1/2
1
1/2
1/2
-3/46

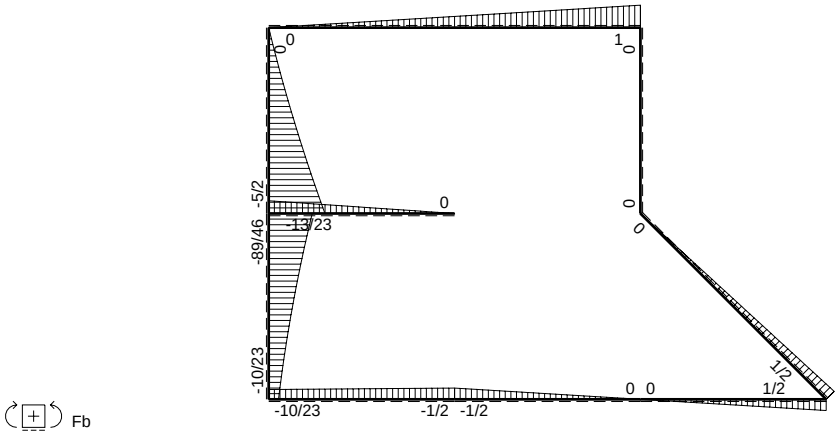
Fb
0
1
0
0
-5/2
0
-13/23
-89/46
0
0
-10/23
1/2
0 0
1/2
-10/23
-1/2 -1/2

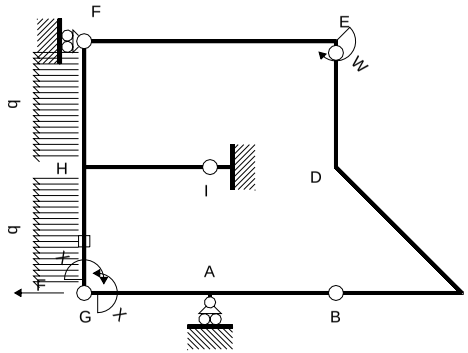

Schema di calcolo iperstatico

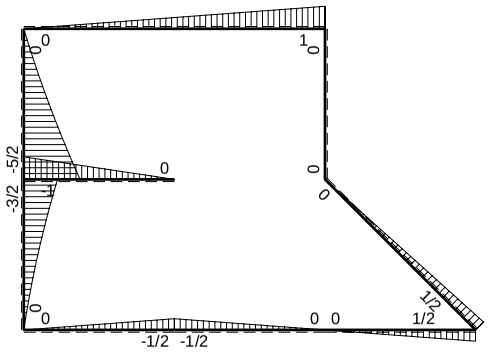

M_0 flessione da carichi assegnati

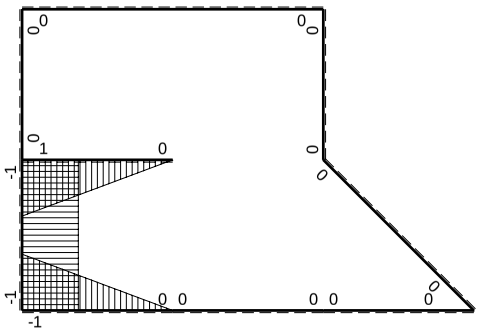

M_x flessione da iperstatica X=1

Quadro contributi PLV per iperstatica $X=W_{GA}$

→	$M_x(x)$	$M_0(x)$	M_xM_0	M_xM_x	$\int M_xM_0/EJdx$	$\int XM_xM_x/EJdx$
AB b	0	-1/2Fb+1/2Fx	0	0	0	0
BA b	0	1/2Fx	0	0		
BC b	0	1/2Fx	0	0	0	0
CB b	0	-1/2Fb+1/2Fx	0	0		
CD √2b	0	1/2Fb-√2/4Fx	0	0	0	0
DE b	0	0	0	0	0	0
ED b	0	0	0	0		
EF 2b	0	Fb-1/2Fx	0	0	0	0
FE 2b	0	-1/2Fx	0	0		
GA b	-1+x/b	-1/2Fx	$1/2Fx-1/2Fx^2/b$	$1-2x/b+x^2/b^2$	$1/12Fb^2/EJ$	1/3Xb/EJ
AG b	x/b	1/2Fb-1/2Fx	$1/2Fx-1/2Fx^2/b$	x^2/b^2		
FH b	0	$-2Fx-1/2qx^2$	0	0	0	0
HF b	0	$5/2Fb-3Fx+1/2qx^2$	0	0		
HI b	1-x/b	-Fb+Fx	$-Fb+2Fx-Fx^2/b$	$1-2x/b+x^2/b^2$	$-1/3Fb^2/EJ$	1/3Xb/EJ
IH b	-x/b	Fx	$-Fx^2/b$	x^2/b^2		
HG b	-1	$-3/2Fb+2Fx-1/2qx^2$	$3/2Fb-2Fx+1/2Fx^2/b$	1	$2/3Fb^2/EJ$	Xb/EJ
GH b	1	$Fx+1/2qx^2$	$Fx+1/2Fx^2/b$	1		
HG	elongazione asta $N_{1HG}\varepsilon_{HG}L_{HG}$				$-Fb^2/EJ$	
A	molla nodo $-V_{1A}(V_{0A}+XV_{1A})/k_A$				$-1/4Fb^2/EJ$	1/4Xb/EJ
	totali				$-5/6Fb^2/EJ$	23/12Xb/EJ
	iperstatica $X=W_{GA}$				10/23Fb	

Sviluppi di calcolo iperstatica

$L^{XX}_{GA} = \int_o^b (1 - 2\,x/b + x^2/b^2)\ 1/EJ\ dx = [\,x - x^2/b + 1/3\,x^3/b^2\,]_o^b\ 1/EJ$

$= (\,b - b + 1/3\,b\,)\ 1/EJ = 1/3\ b/EJ$

$L^{XX}_{AG} = \int_o^b (\,x^2/b^2\,)\ 1/EJ\ dx = [1/3\,x^3/b^2\,]_o^b\ 1/EJ$

$= (1/3\,b\,)\ 1/EJ = 1/3\ b/EJ$

$L^{XX}_{HI} = \int_o^b (1 - 2\,x/b + x^2/b^2)\ 1/EJ\ dx = [\,x - x^2/b + 1/3\,x^3/b^2\,]_o^b\ 1/EJ$

$= (\,b - b + 1/3\,b\,)\ 1/EJ = 1/3\ b/EJ$

$L^{XX}_{IH} = \int_o^b (\,x^2/b^2\,)\ 1/EJ\ dx = [1/3\,x^3/b^2\,]_o^b\ 1/EJ$

$= (1/3\,b\,)\ 1/EJ = 1/3\ b/EJ$

$L^{XX}_{HG} = \int_o^b (1)\ 1/EJ\ dx = [\,x\,]_o^b\ 1/EJ$

$= (\,b\,)\ 1/EJ = b/EJ$

$L^{XX}_{GH} = \int_o^b (1)\ 1/EJ\ dx = [\,x\,]_o^b\ 1/EJ$

$= (\,b\,)\ 1/EJ = b/EJ$

$L^{Xo}_{GA} = \int_o^b (1/2\,x/b - 1/2\,x^2/b^2)\ Fb\ 1/EJ\ dx = [1/4\,x^2/b - 1/6\,x^3/b^2\,]_o^b\ Fb\ 1/EJ$

$= (1/4\,b - 1/6\,b\,)\ Fb\ 1/EJ = 1/12\ Fb^2/EJ$

$L^{Xo}_{AG} = \int_o^b (1/2\,x/b - 1/2\,x^2/b^2)\ Fb\ 1/EJ\ dx = [1/4\,x^2/b - 1/6\,x^3/b^2\,]_o^b\ Fb\ 1/EJ$

$= (1/4\,b - 1/6\,b\,)\ Fb\ 1/EJ = 1/12\ Fb^2/EJ$

$L^{Xo}_{HI} = \int_o^b (-1 + 2\,x/b - x^2/b^2)\ Fb\ 1/EJ\ dx = [-\,x + x^2/b - 1/3\,x^3/b^2\,]_o^b\ Fb\ 1/EJ$

$= (-\,b + b - 1/3\,b\,)\ Fb\ 1/EJ = -1/3\ Fb^2/EJ$

$L^{Xo}_{IH} = \int_o^b (-\,x^2/b^2\,)\ Fb\ 1/EJ\ dx = [-1/3\,x^3/b^2\,]_o^b\ Fb\ 1/EJ$

$= (-1/3\,b\,)\ Fb\ 1/EJ = -1/3\ Fb^2/EJ$

$L^{Xo}_{HG} = \int_o^b (3/2 - 2\,x/b + 1/2\,x^2/b^2)\ Fb\ 1/EJ\ dx - 1\ \ (-1)\ \ (-1)\ \ Fb^2/EJ$

$= [3/2\,x - x^2/b + 1/6\,x^3/b^2\,]_o^b\ Fb\ 1/EJ\ -\ 1\ \ (-1)\ \ (-1)\ \ Fb^2/EJ$

$= (3/2\,b - b + 1/6\,b\,)\ Fb\ 1/EJ\ -\ 1\ \ (-1)\ \ (-1)\ \ Fb^2/EJ = -1/3\ Fb^2/EJ$

$L^{Xo}_{GH} = \int_o^b (\,x/b + 1/2\,x^2/b^2\,)\ Fb\ 1/EJ\ dx - 1\ \ (-1)\ \ (-1)\ \ Fb^2/EJ$

$= [1/2\,x^2/b + 1/6\,x^3/b^2\,]_o^b\ Fb\ 1/EJ\ -\ 1\ \ (-1)\ \ (-1)\ \ Fb^2/EJ$

$= (1/2\,b + 1/6\,b\,)\ Fb\ 1/EJ\ -\ 1\ \ (-1)\ \ (-1)\ \ Fb^2/EJ = -1/3\ Fb^2/EJ$

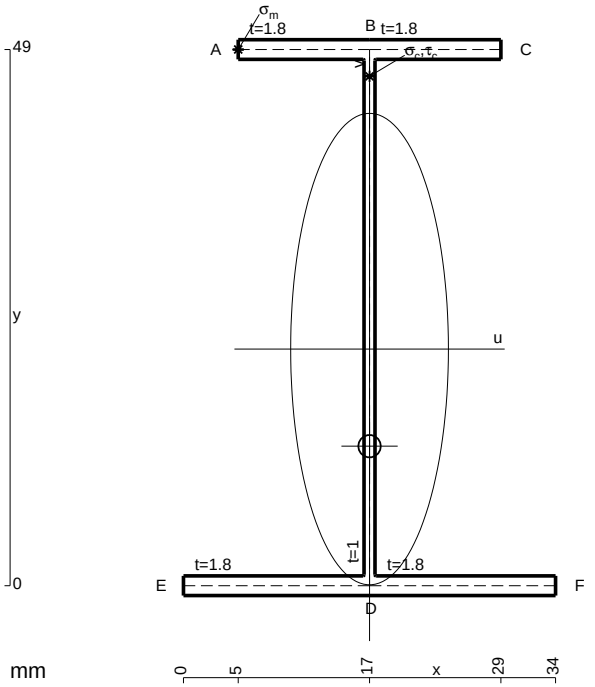

A = 153.4 mm^2
J_u = 71202. mm^4
J_v = 7969. mm^4
J_t = 129.1 mm^4
y_o = -8.875 mm
y_g = 21.63 mm
N = 155. N
T_y = -930. N
M_x = -612250. Nmm
x_m = 5. mm
y_m = 49. mm
u_m = -12. mm
v_m = 27.37 mm
$\sigma_m = N/A - Mv/J_u$ = 236.4 N/mm^2
x_c = 17. mm
y_c = 49. mm
v_c = 27.37 mm
$\sigma_c = N/A - Mv/J_u$ = 236.4 N/mm^2
$\tau_c = TS^*/tJ_u$ = 15.45 N/mm^2
$\tau_g = TS^*/tJ_u$ = 15.45 N/mm^2
t_c = 310. mm
$\sigma_o = \sqrt{\sigma^2 + 3\tau^2}$ = 237.9 N/mm^2

ESΣ05.xxxx.139

@ Adolfo Zavelani Rossi, Politecnico di Milano, vers.27.03.13 01.12.25

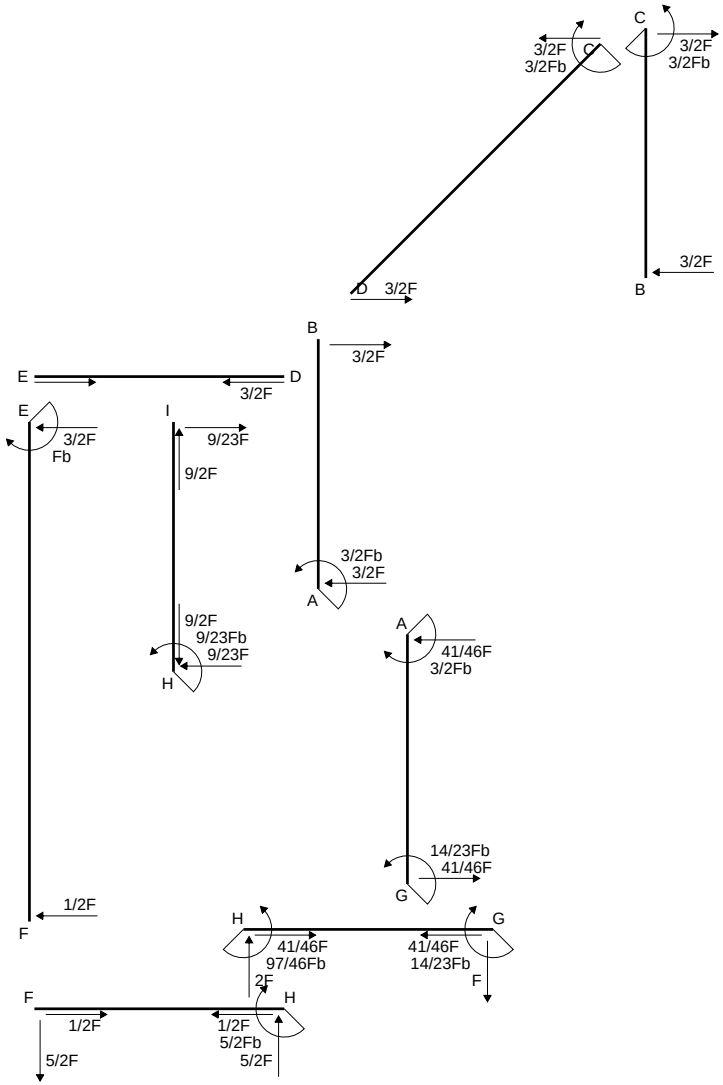
C
3/2F
3/2Fb
C
3/2F
3/2Fb
3/2F
D 3/2F
B
B
3/2F
E
D
3/2F
E
3/2F
Fb
I
9/23F
9/2F
3/2Fb
3/2F
A
9/2F
9/23Fb
9/23F
H
A
41/46F
3/2Fb
14/23Fb
41/46F
G
1/2F
F
H
G
41/46F
97/46Fb
2F
41/46F
14/23Fb
F
F
H
1/2F
1/2F
5/2Fb
5/2F
5/2F

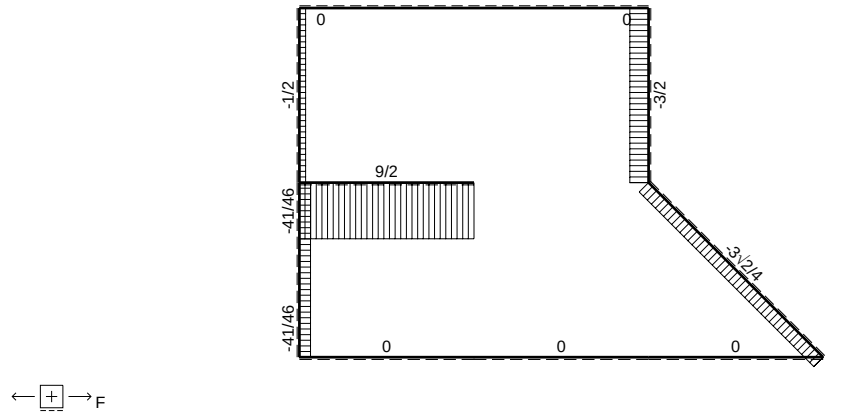
0
0
-1/2
-3/2
9/2
-41/46
-3√2/4
-41/46
0
0
0
F

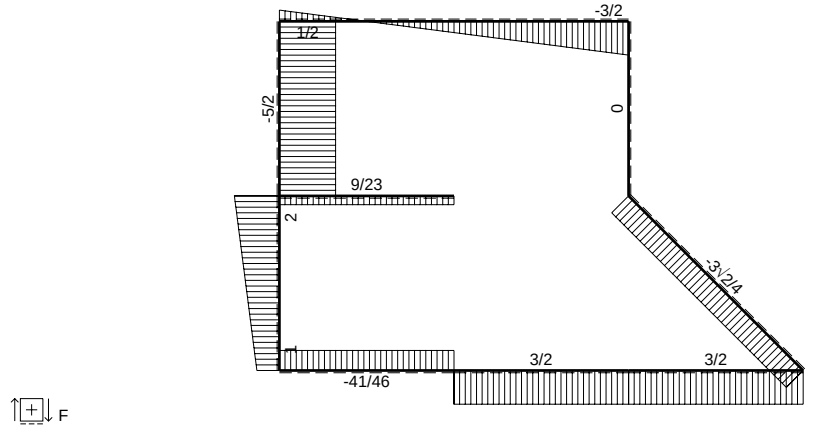
-3/2
1/2
-5/2
0
9/23
2
-3√2/4
1
3/2
3/2
-41/46
F

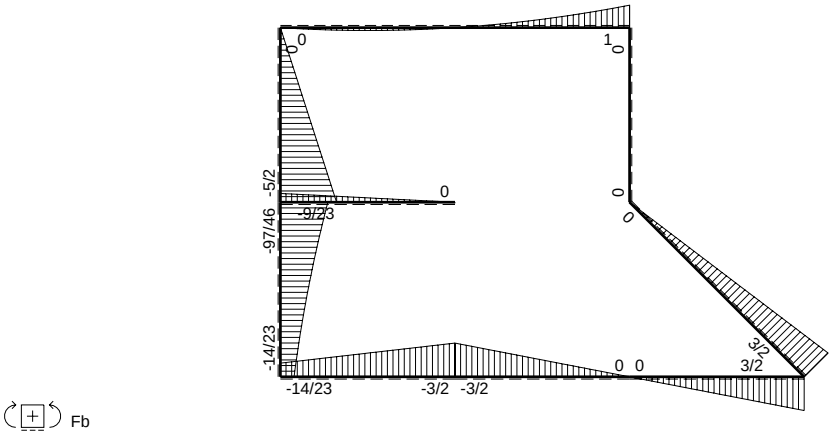
0
1
0
0
-5/2
0
-9/23
-97/46
0
0
0
-14/23
3/2
0 0
3/2
-14/23
-3/2 -3/2
Fb

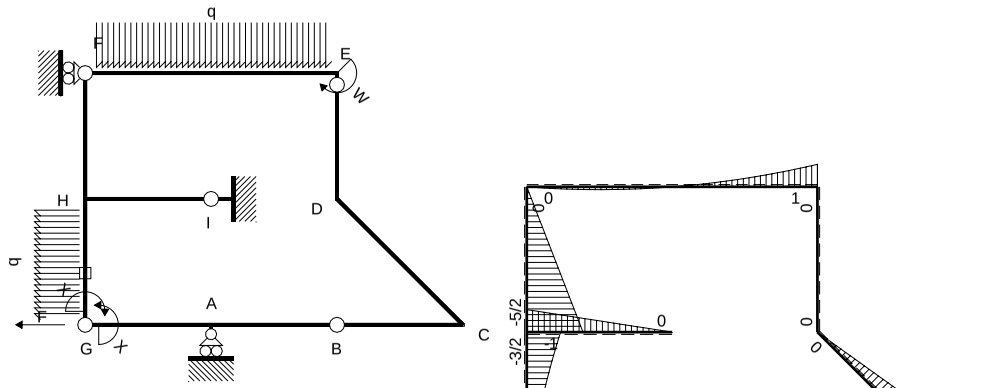

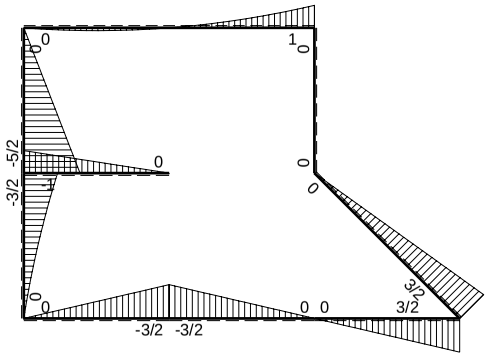

M_0 flessione da carichi assegnati

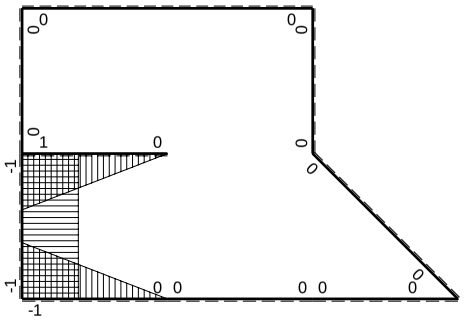

M_x flessione da iperstatica X=1

Quadro contributi PLV per iperstatica $X=W_{GA}$

→	$M_x(x)$	$M_0(x)$	M_xM_0	M_xM_x	$\int M_xM_0/EJdx$	$\int XM_xM_x/EJdx$
AB b	0	$-3/2Fb+3/2Fx$	0	0	0	0
BA b	0	$3/2Fx$	0	0		
BC b	0	$3/2Fx$	0	0	0	0
CB b	0	$-3/2Fb+3/2Fx$	0	0		
CD $\sqrt{2}b$	0	$3/2Fb-3\sqrt{2}/4Fx$	0	0	0	0
DE b	0	0	0	0	0	0
ED b	0	0	0	0		
EF 2b	0	$Fb-3/2Fx+1/2qx^2$	0	0	0	0
FE 2b	0	$1/2Fx-1/2qx^2$	0	0		
GA b	$-1+x/b$	$-3/2Fx$	$3/2Fx-3/2Fx^2/b$	$1-2x/b+x^2/b^2$	$1/4Fb^2/EJ$	$1/3Xb/EJ$
AG b	x/b	$3/2Fb-3/2Fx$	$3/2Fx-3/2Fx^2/b$	x^2/b^2		
FH b	0	$-5/2Fx$	0	0	0	0
HF b	0	$5/2Fb-5/2Fx$	0	0		
HI b	$1-x/b$	$-Fb+Fx$	$-Fb+2Fx-Fx^2/b$	$1-2x/b+x^2/b^2$	$-1/3Fb^2/EJ$	$1/3Xb/EJ$
IH b	$-x/b$	Fx	$-Fx^2/b$	x^2/b^2		
HG b	-1	$-3/2Fb+2Fx-1/2qx^2$	$3/2Fb-2Fx+1/2Fx^2/b$	1	$2/3Fb^2/EJ$	Xb/EJ
GH b	1	$Fx+1/2qx^2$	$Fx+1/2Fx^2/b$	1		
HG	elongazione asta $N_{1HG}\varepsilon_{HG}L_{HG}$				$-Fb^2/EJ$	
A	molla nodo $-V_{1A}(V_{0A}+XV_{1A})/k_A$				$-3/4Fb^2/EJ$	$1/4Xb/EJ$
	totali				$-7/6Fb^2/EJ$	$23/12Xb/EJ$
	iperstatica $X=W_{GA}$				14/23Fb	

Sviluppi di calcolo iperstatica

$L^{XX}_{GA} = \int_o^b (1 - 2\,x/b + x^2/b^2)\ 1/EJ\ dx = [\ x - x^2/b + 1/3\ x^3/b^2\ ]_o^b\ 1/EJ$

$= (\ b - b + 1/3\ b\ )\ 1/EJ\ = 1/3\ b/EJ$

$L^{XX}_{AG} = \int_o^b (\ x^2/b^2\ )\ 1/EJ\ dx = [1/3\ x^3/b^2\ ]_o^b\ 1/EJ$

$= (1/3\ b\ )\ 1/EJ\ = 1/3\ b/EJ$

$L^{XX}_{HI} = \int_o^b (1 - 2\,x/b + x^2/b^2)\ 1/EJ\ dx = [\ x - x^2/b + 1/3\ x^3/b^2\ ]_o^b\ 1/EJ$

$= (\ b - b + 1/3\ b\ )\ 1/EJ\ = 1/3\ b/EJ$

$L^{XX}_{IH} = \int_o^b (\ x^2/b^2\ )\ 1/EJ\ dx = [1/3\ x^3/b^2\ ]_o^b\ 1/EJ$

$= (1/3\ b\ )\ 1/EJ\ = 1/3\ b/EJ$

$L^{XX}_{HG} = \int_o^b (1\ )\ 1/EJ\ dx = [\ x\ ]_o^b\ 1/EJ$

$= (\ b\ )\ 1/EJ\ =\ b/EJ$

$L^{XX}_{GH} = \int_o^b (1\ )\ 1/EJ\ dx = [\ x\ ]_o^b\ 1/EJ$

$= (\ b\ )\ 1/EJ\ =\ b/EJ$

$L^{Xo}_{GA} = \int_o^b (3/2\ x/b - 3/2\ x^2/b^2\ )\ Fb\ 1/EJ\ dx = [3/4\ x^2/b - 1/2\ x^3/b^2\ ]_o^b\ Fb\ 1/EJ$

$= (3/4\ b - 1/2\ b\ )\ Fb\ 1/EJ\ = 1/4\ \ Fb^2/EJ$

$L^{Xo}_{AG} = \int_o^b (3/2\ x/b - 3/2\ x^2/b^2\ )\ Fb\ 1/EJ\ dx = [3/4\ x^2/b - 1/2\ x^3/b^2\ ]_o^b\ Fb\ 1/EJ$

$= (3/4\ b - 1/2\ b\ )\ Fb\ 1/EJ\ = 1/4\ \ Fb^2/EJ$

$L^{Xo}_{HI} = \int_o^b (-1 + 2\,x/b - x^2/b^2\ )\ Fb\ 1/EJ\ dx = [-\ x + x^2/b - 1/3\ x^3/b^2\ ]_o^b\ Fb\ 1/EJ$

$= (-\ b + b - 1/3\ b\ )\ Fb\ 1/EJ\ = -1/3\ \ Fb^2/EJ$

$L^{Xo}_{IH} = \int_o^b (-\ x^2/b^2\ )\ Fb\ 1/EJ\ dx = [-1/3\ x^3/b^2\ ]_o^b\ Fb\ 1/EJ$

$= (-1/3\ b\ )\ Fb\ 1/EJ\ = -1/3\ \ Fb^2/EJ$

$L^{Xo}_{HG} = \int_o^b (3/2 - 2\,x/b + 1/2\ x^2/b^2\ )\ Fb\ 1/EJ\ dx - 1\ \ (-1)\ \ (-1)\ \ Fb^2/EJ$

$= [3/2\ x - x^2/b + 1/6\ x^3/b^2\ ]_o^b\ Fb\ 1/EJ\ - 1\ \ (-1)\ \ (-1)\ \ Fb^2/EJ$

$= (3/2\ b - b + 1/6\ b\ )\ Fb\ 1/EJ\ - 1\ \ (-1)\ \ (-1)\ \ Fb^2/EJ = -1/3\ \ Fb^2/EJ$

$L^{Xo}_{GH} = \int_o^b (\ x/b + 1/2\ x^2/b^2\ )\ Fb\ 1/EJ\ dx - 1\ \ (-1)\ \ (-1)\ \ Fb^2/EJ$

$= [1/2\ x^2/b + 1/6\ x^3/b^2\ ]_o^b\ Fb\ 1/EJ\ - 1\ \ (-1)\ \ (-1)\ \ Fb^2/EJ$

$= (1/2\ b + 1/6\ b\ )\ Fb\ 1/EJ\ - 1\ \ (-1)\ \ (-1)\ \ Fb^2/EJ = -1/3\ \ Fb^2/EJ$

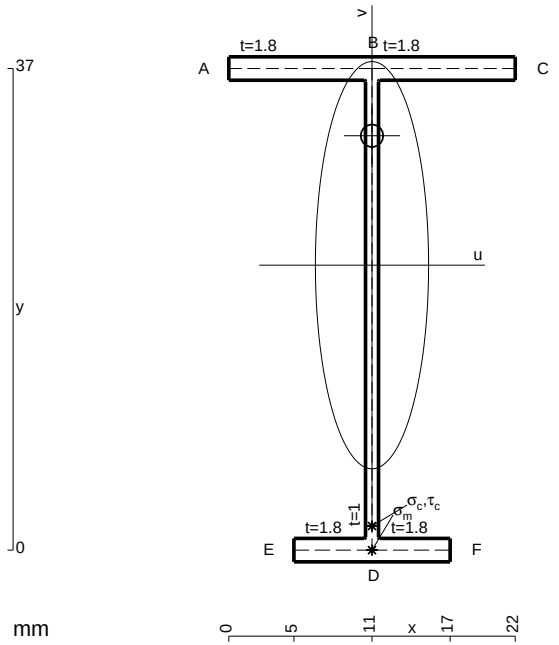

A = 98.2 mm^2
J_u = 24038. mm^4
J_v = 1856. mm^4
J_t = 78.43 mm^4
y_o = 9.943 mm
y_g = 21.89 mm
N = -140. N
T_y = -700. N
M_x = -217000. Nmm
x_m = 11. mm
v_m = -21.89 mm
$\sigma_m = N/A - Mv/J_u$ = -199. N/mm^2
y_c = 3. mm
u_c = -11. mm
v_c = -18.89 mm
$\sigma_c = N/A - Mv/J_u$ = -199. N/mm^2
$\tau_c = TS^*/tJ_u$ = 13.77 N/mm^2
$\tau_g = TS^*/tJ_u$ = 13.77 N/mm^2
t_c = 280. mm
$\sigma_o = \sqrt{\sigma^2 + 3\tau^2}$ = 200.5 N/mm^2

ESΣ05.xxxx.140

@ Adolfo Zavelani Rossi, Politecnico di Milano, vers.27.03.13 01.12.25

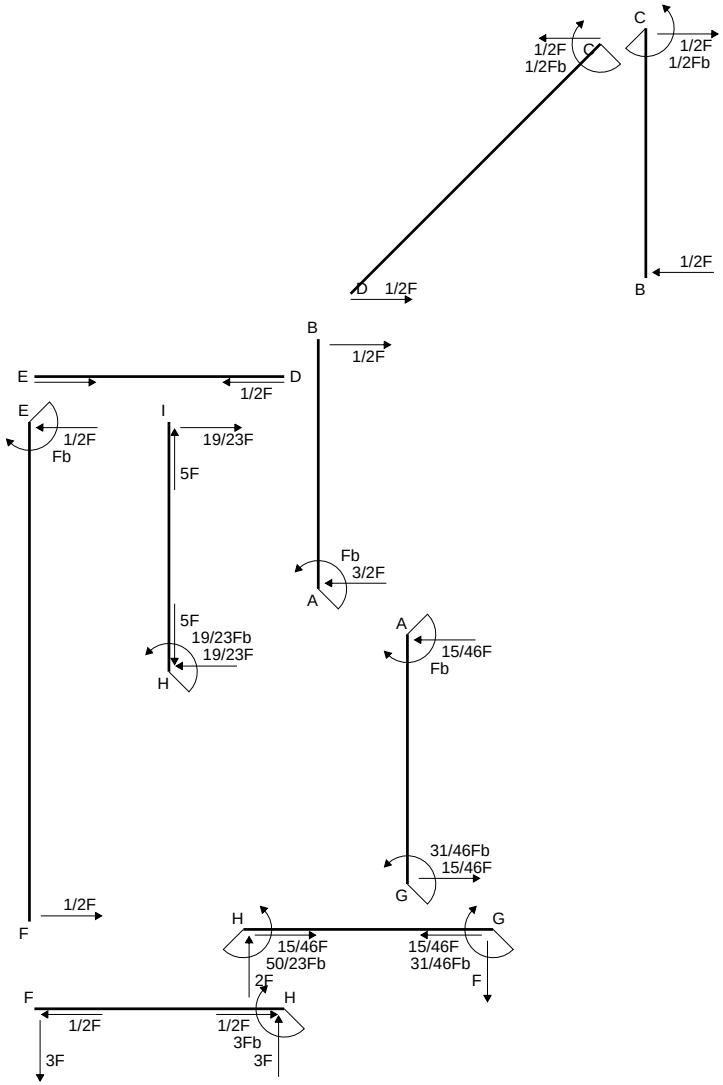
C
1/2F
1/2Fb
C
1/2F
1/2Fb
D 1/2F
B
1/2F
B
1/2F
E
D
1/2F
E
1/2F
Fb
I
19/23F
5F
Fb
3/2F
A
5F
19/23Fb
19/23F
H
A
15/46F
Fb
31/46Fb
15/46F
G
1/2F
F
H
G
15/46F
50/23Fb
15/46F
31/46Fb
2F
F
F
H
1/2F
1/2F
3Fb
3F
3F

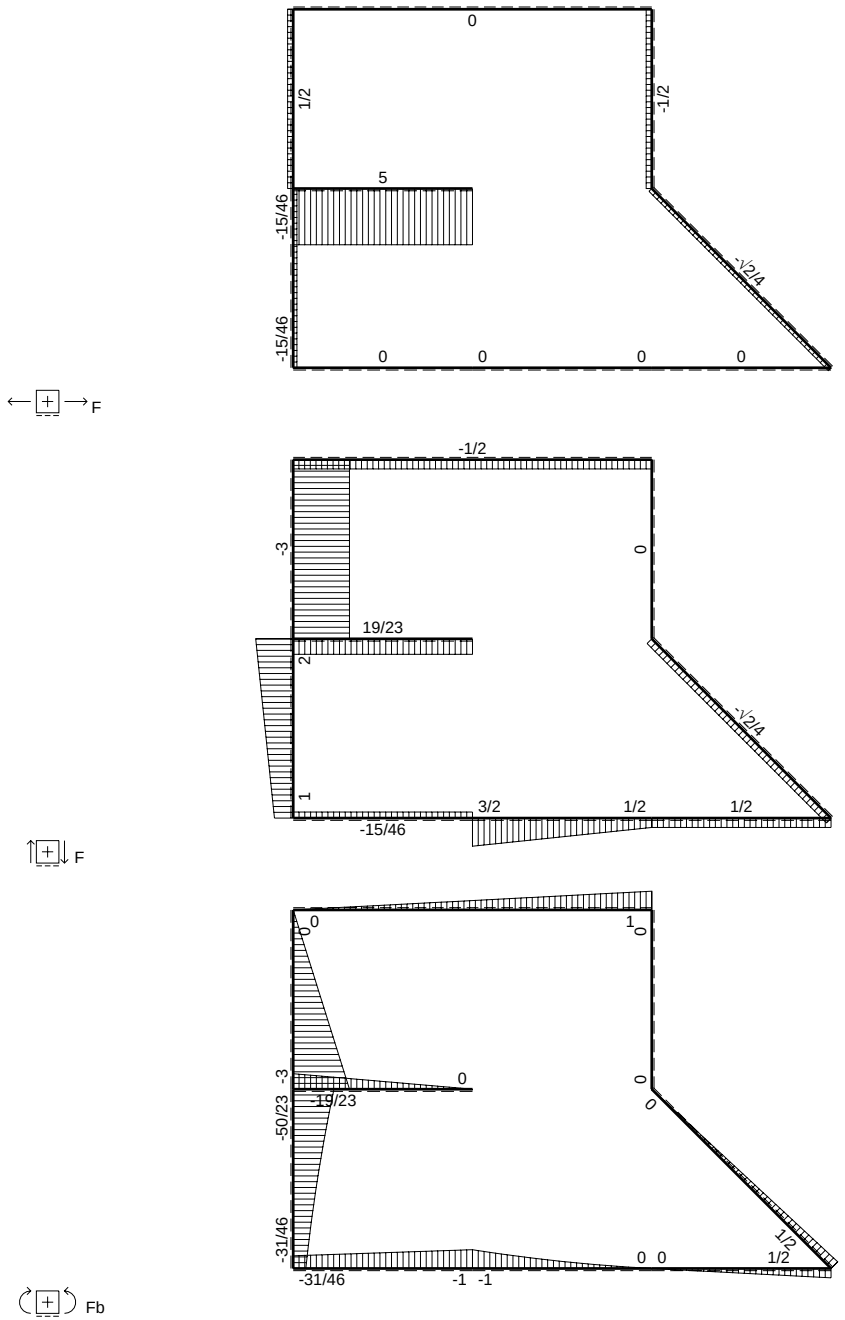
F
0
1/2
-1/2
5
-15/46
-15/46
-√2/4
0 0 0 0
F
-1/2
-3
0
19/23
2
-√2/4
1
3/2
1/2
1/2
-15/46
Fb
0
1
0
0
-3
-19/23
0
0
-50/23
-31/46
1/2
0 0
1/2
-31/46
-1 -1

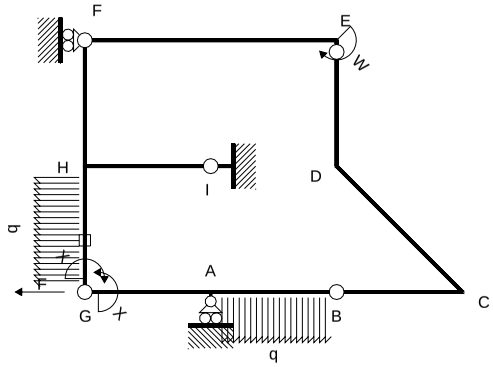

Schema di calcolo iperstatico

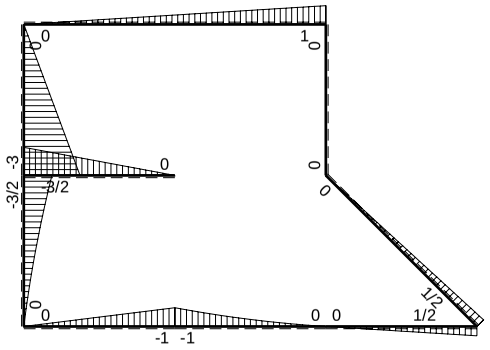

M_0 flessione da carichi assegnati

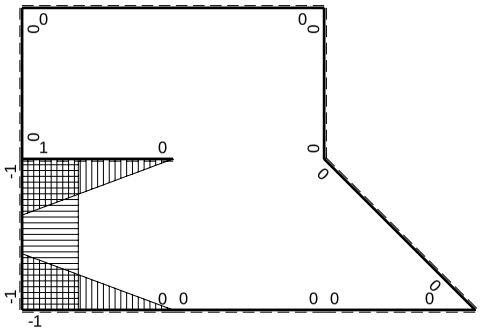

M_x flessione da iperstatica X=1

Quadro contributi PLV per iperstatica $X=W_{GA}$

→	$M_x(x)$	$M_0(x)$	M_xM_0	M_xM_x	$\int M_xM_0/EJdx$	$\int XM_xM_x/EJdx$
AB b	0	$-Fb+3/2Fx-1/2qx^2$	0	0	0	0
BA b	0	$1/2Fx+1/2qx^2$	0	0		
BC b	0	1/2Fx	0	0	0	0
CB b	0	-1/2Fb+1/2Fx	0	0		
CD √2b	0	1/2Fb-√2/4Fx	0	0	0	0
DE b	0	0	0	0	0	0
ED b	0	0	0	0		
EF 2b	0	Fb-1/2Fx	0	0	0	0
FE 2b	0	-1/2Fx	0	0		
GA b	-1+x/b	-Fx	$Fx-Fx^2/b$	$1-2x/b+x^2/b^2$	$1/6Fb^2/EJ$	1/3Xb/EJ
AG b	x/b	Fb-Fx	$Fx-Fx^2/b$	x^2/b^2		
FH b	0	-3Fx	0	0	0	0
HF b	0	3Fb-3Fx	0	0		
HI b	1-x/b	-3/2Fb+3/2Fx	$-3/2Fb+3Fx-3/2Fx^2/b$	$1-2x/b+x^2/b^2$	$-1/2Fb^2/EJ$	1/3Xb/EJ
IH b	-x/b	3/2Fx	$-3/2Fx^2/b$	x^2/b^2		
HG b	-1	$-3/2Fb+2Fx-1/2qx^2$	$3/2Fb-2Fx+1/2Fx^2/b$	1	$2/3Fb^2/EJ$	Xb/EJ
GH b	1	$Fx+1/2qx^2$	$Fx+1/2Fx^2/b$	1		
HG	elongazione asta $N_{1HG}\varepsilon_{HG}L_{HG}$				$-Fb^2/EJ$	
A	molla nodo $-V_{1A}(V_{0A}+XV_{1A})/k_A$				$-5/8Fb^2/EJ$	1/4Xb/EJ
	totali				$-31/24Fb^2/EJ$	23/12Xb/EJ
	iperstatica $X=W_{GA}$				31/46Fb	

Sviluppi di calcolo iperstatica

$L^{XX}_{GA} = \int_o^b (1 - 2\,x/b + x^2/b^2)\ 1/EJ\ dx = [\ x - x^2/b + 1/3\ x^3/b^2\ ]_o^b\ 1/EJ$

$= (\ b - b + 1/3\ b\ )\ 1/EJ\ = 1/3\ b/EJ$

$L^{XX}_{AG} = \int_o^b (\ x^2/b^2\ )\ 1/EJ\ dx = [1/3\ x^3/b^2\ ]_o^b\ 1/EJ$

$= (1/3\ b\ )\ 1/EJ\ = 1/3\ b/EJ$

$L^{XX}_{HI} = \int_o^b (1 - 2\,x/b + x^2/b^2)\ 1/EJ\ dx = [\ x - x^2/b + 1/3\ x^3/b^2\ ]_o^b\ 1/EJ$

$= (\ b - b + 1/3\ b\ )\ 1/EJ\ = 1/3\ b/EJ$

$L^{XX}_{IH} = \int_o^b (\ x^2/b^2\ )\ 1/EJ\ dx = [1/3\ x^3/b^2\ ]_o^b\ 1/EJ$

$= (1/3\ b\ )\ 1/EJ\ = 1/3\ b/EJ$

$L^{XX}_{HG} = \int_o^b (1\ )\ 1/EJ\ dx = [\ x\ ]_o^b\ 1/EJ$

$= (\ b\ )\ 1/EJ\ =\ b/EJ$

$L^{XX}_{GH} = \int_o^b (1\ )\ 1/EJ\ dx = [\ x\ ]_o^b\ 1/EJ$

$= (\ b\ )\ 1/EJ\ =\ b/EJ$

$L^{Xo}_{GA} = \int_o^b (\ x/b - x^2/b^2\ )\ Fb\ 1/EJ\ dx = [1/2\ x^2/b - 1/3\ x^3/b^2\ ]_o^b\ Fb\ 1/EJ$

$= (1/2\ b - 1/3\ b\ )\ Fb\ 1/EJ\ = 1/6\ \ Fb^2/EJ$

$L^{Xo}_{AG} = \int_o^b (\ x/b - x^2/b^2\ )\ Fb\ 1/EJ\ dx = [1/2\ x^2/b - 1/3\ x^3/b^2\ ]_o^b\ Fb\ 1/EJ$

$= (1/2\ b - 1/3\ b\ )\ Fb\ 1/EJ\ = 1/6\ \ Fb^2/EJ$

$L^{Xo}_{HI} = \int_o^b (-3/2 + 3\,x/b - 3/2\ x^2/b^2\ )\ Fb\ 1/EJ\ dx = [-3/2\ x + 3/2\ x^2/b - 1/2\ x^3/b^2\ ]_o^b\ Fb\ 1/EJ$

$= (-3/2\ b + 3/2\ b - 1/2\ b\ )\ Fb\ 1/EJ\ = -1/2\ \ Fb^2/EJ$

$L^{Xo}_{IH} = \int_o^b (-3/2\ x^2/b^2\ )\ Fb\ 1/EJ\ dx = [-1/2\ x^3/b^2\ ]_o^b\ Fb\ 1/EJ$

$= (-1/2\ b\ )\ Fb\ 1/EJ\ = -1/2\ \ Fb^2/EJ$

$L^{Xo}_{HG} = \int_o^b (3/2 - 2\,x/b + 1/2\ x^2/b^2\ )\ Fb\ 1/EJ\ dx - 1\ \ (-1)\ \ (-1)\ \ Fb^2/EJ$

$= [3/2\ x - x^2/b + 1/6\ x^3/b^2\ ]_o^b\ Fb\ 1/EJ\ - 1\ \ (-1)\ \ (-1)\ \ Fb^2/EJ$

$= (3/2\ b - b + 1/6\ b\ )\ Fb\ 1/EJ\ - 1\ \ (-1)\ \ (-1)\ \ Fb^2/EJ = -1/3\ \ Fb^2/EJ$

$L^{Xo}_{GH} = \int_o^b (\ x/b + 1/2\ x^2/b^2\ )\ Fb\ 1/EJ\ dx - 1\ \ (-1)\ \ (-1)\ \ Fb^2/EJ$

$= [1/2\ x^2/b + 1/6\ x^3/b^2\ ]_o^b\ Fb\ 1/EJ\ - 1\ \ (-1)\ \ (-1)\ \ Fb^2/EJ$

$= (1/2\ b + 1/6\ b\ )\ Fb\ 1/EJ\ - 1\ \ (-1)\ \ (-1)\ \ Fb^2/EJ = -1/3\ \ Fb^2/EJ$

PROCEDIMENTO E RISULTATI 236561 ESΣ05.xxxx.141

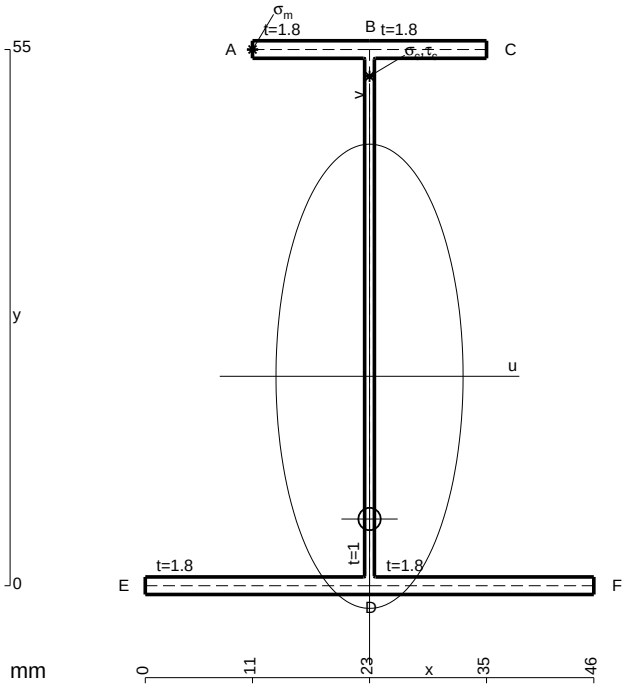

A = 181. mm^2
J_u = 102600. mm^4
J_v = 16674. mm^4
J_t = 154.4 mm^4
y_o = -14.64 mm
y_g = 21.48 mm
N = 205. N
T_y = -1230. N
M_x = -627300. Nmm
x_m = 11. mm
y_m = 55. mm
u_m = -12. mm
v_m = 33.52 mm
$\sigma_m = N/A - Mv/J_u$ = 206.1 N/mm^2
x_c = 23. mm
y_c = 55. mm
v_c = 33.52 mm
$\sigma_c = N/A - Mv/J_u$ = 206.1 N/mm^2
$\tau_c = TS^*/tJ_u$ = 17.36 N/mm^2
$\tau_g = TS^*/tJ_u$ = 17.36 N/mm^2
t_c = 410. mm
$\sigma_o = \sqrt{\sigma^2 + 3\tau^2}$ = 208.2 N/mm^2

@ Adolfo Zavelani Rossi, Politecnico di Milano, vers.27.03.13 01.12.25

ESΣ05.xxxx.141

@ Adolfo Zavelani Rossi, Politecnico di Milano, vers.27.03.13 01.12.25

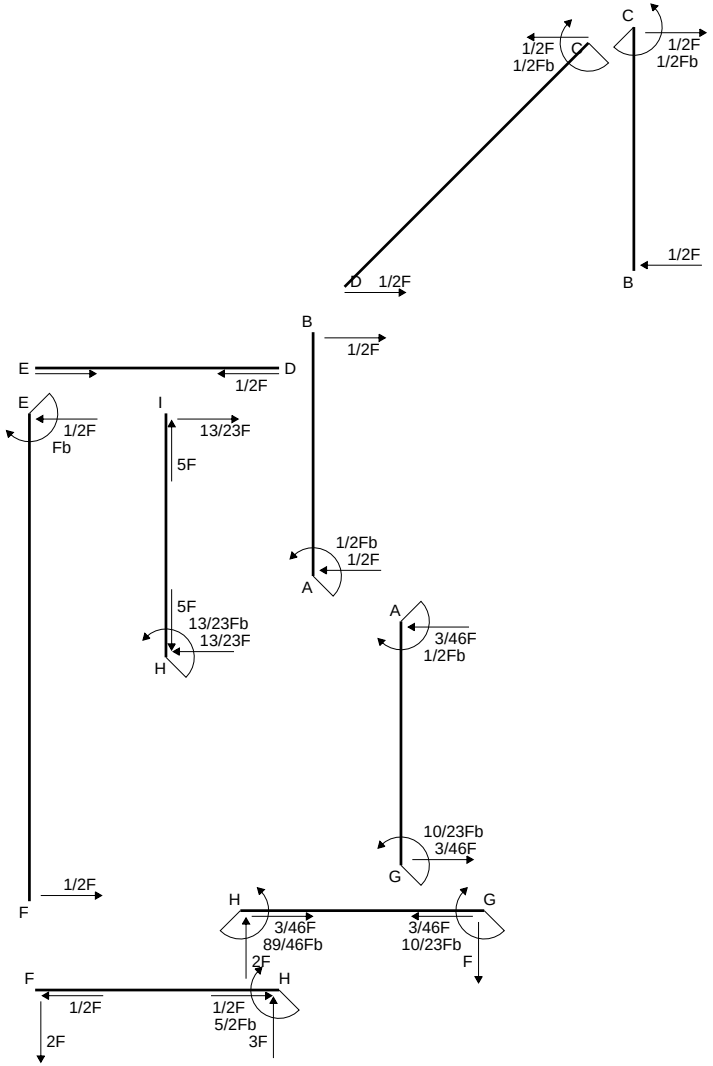
C
1/2F
1/2Fb
C
1/2F
1/2Fb
1/2F
D 1/2F
B
B
1/2F
E
D
1/2F
E
1/2F
Fb
I
13/23F
5F
1/2Fb
1/2F
A
5F
13/23Fb
13/23F
H
A
3/46F
1/2Fb
10/23Fb
3/46F
G
1/2F
F
H
G
3/46F
89/46Fb
2F
3/46F
10/23Fb
F
F
H
1/2F
1/2F
5/2Fb
3F
2F

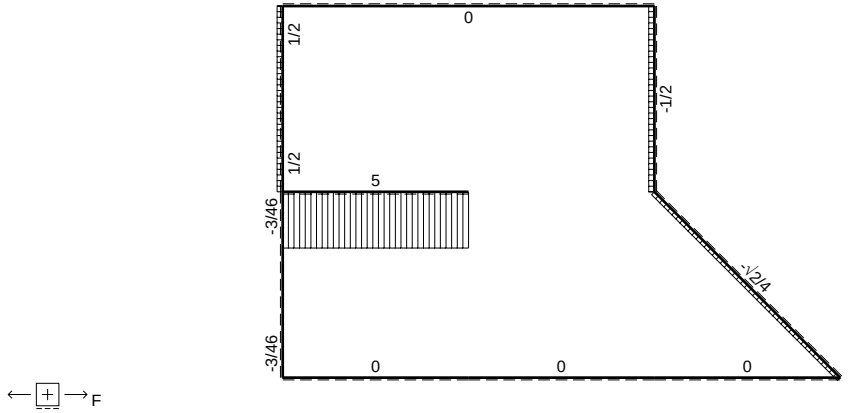
F
0
1/2
-1/2
1/2
5
-3/46
-1/2
-3/46
0
0
0

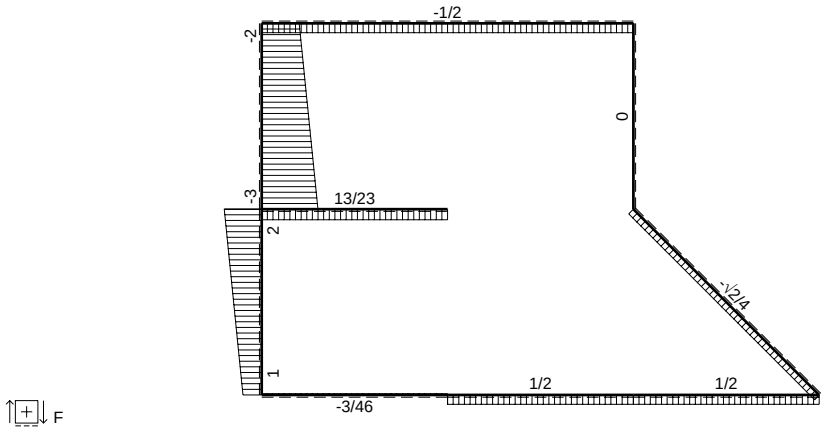
F
-1/2
-2
0
-3
13/23
2
-1/2
1
1/2
1/2
-3/46

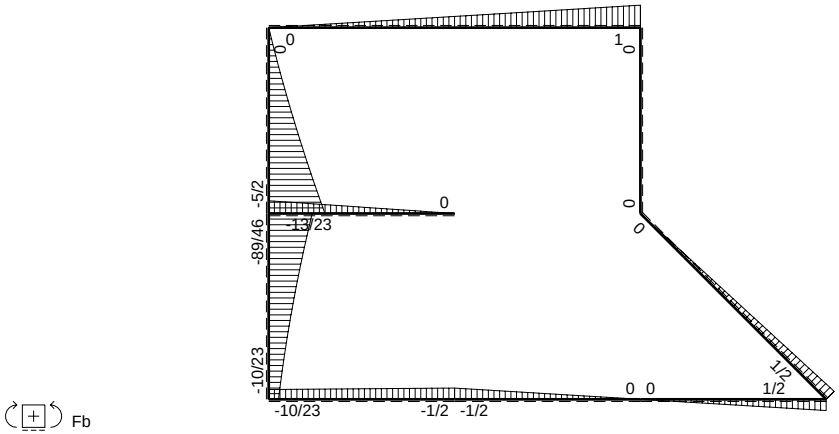
Fb
0
1
0
0
-5/2
0
-13/23
0
-89/46
0
-10/23
1/2
0 0
1/2
-10/23
-1/2 -1/2

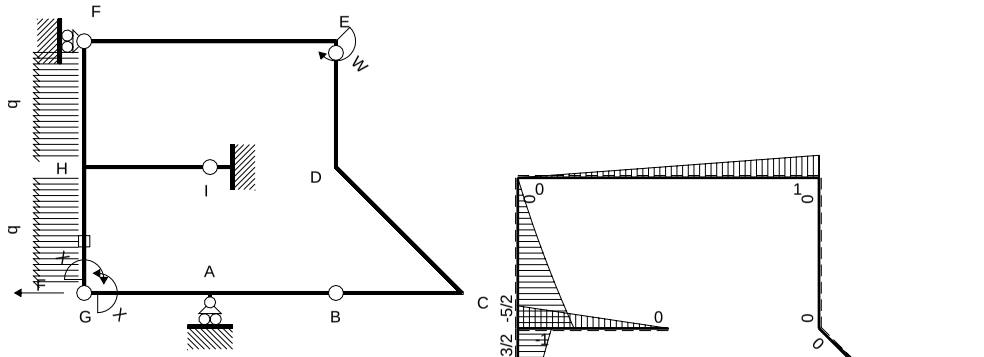

Schema di calcolo iperstatico

M_0 flessione da carichi assegnati

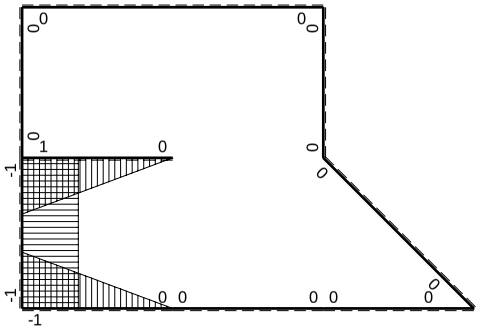

M_x flessione da iperstatica X=1

PROCEDIMENTO E RISULTATI 238186 ESΣ05.xxxx.142

Quadro contributi PLV per iperstatica $X=W_{GA}$

→	$M_x(x)$	$M_0(x)$	M_xM_0	M_xM_x	$\int M_xM_0/EJdx$	$\int XM_xM_x/EJdx$
AB b	0	$-1/2Fb+1/2Fx$	0	0	0	0
BA b	0	$1/2Fx$	0	0		
BC b	0	$1/2Fx$	0	0	0	0
CB b	0	$-1/2Fb+1/2Fx$	0	0		
CD $\sqrt{2}b$	0	$1/2Fb-\sqrt{2}/4Fx$	0	0	0	0
DE b	0	0	0	0	0	0
ED b	0	0	0	0		
EF 2b	0	$Fb-1/2Fx$	0	0	0	0
FE 2b	0	$-1/2Fx$	0	0		
GA b	$-1+x/b$	$-1/2Fx$	$1/2Fx-1/2Fx^2/b$	$1-2x/b+x^2/b^2$	$1/12Fb^2/EJ$	$1/3Xb/EJ$
AG b	x/b	$1/2Fb-1/2Fx$	$1/2Fx-1/2Fx^2/b$	x^2/b^2		
FH b	0	$-2Fx-1/2qx^2$	0	0	0	0
HF b	0	$5/2Fb-3Fx+1/2qx^2$	0	0		
HI b	$1-x/b$	$-Fb+Fx$	$-Fb+2Fx-Fx^2/b$	$1-2x/b+x^2/b^2$	$-1/3Fb^2/EJ$	$1/3Xb/EJ$
IH b	$-x/b$	Fx	$-Fx^2/b$	x^2/b^2		
HG b	-1	$-3/2Fb+2Fx-1/2qx^2$	$3/2Fb-2Fx+1/2Fx^2/b$	1	$2/3Fb^2/EJ$	Xb/EJ
GH b	1	$Fx+1/2qx^2$	$Fx+1/2Fx^2/b$	1		
HG	elongazione asta $N_{1HG}\varepsilon_{HG}L_{HG}$				$-Fb^2/EJ$	
A	molla nodo $-V_{1A}(V_{0A}+XV_{1A})/k_A$				$-1/4Fb^2/EJ$	$1/4Xb/EJ$
	totali				$-5/6Fb^2/EJ$	$23/12Xb/EJ$
	iperstatica $X=W_{GA}$				10/23Fb	

Sviluppi di calcolo iperstatica

@ Adolfo Zavelani Rossi, Politecnico di Milano, vers.27.03.13 01.12.25

$L^{XX}_{GA} = \int_o^b (1 - 2\,x/b + x^2/b^2)\ 1/EJ\ dx = [\ x - x^2/b + 1/3\ x^3/b^2\ ]_o^b\ 1/EJ$

$= (\ b - b + 1/3\ b\ )\ 1/EJ\ = 1/3\ b/EJ$

$L^{XX}_{AG} = \int_o^b (\ x^2/b^2\ )\ 1/EJ\ dx = [1/3\ x^3/b^2\ ]_o^b\ 1/EJ$

$= (1/3\ b\ )\ 1/EJ\ = 1/3\ b/EJ$

$L^{XX}_{HI} = \int_o^b (1 - 2\,x/b + x^2/b^2)\ 1/EJ\ dx = [\ x - x^2/b + 1/3\ x^3/b^2\ ]_o^b\ 1/EJ$

$= (\ b - b + 1/3\ b\ )\ 1/EJ\ = 1/3\ b/EJ$

$L^{XX}_{IH} = \int_o^b (\ x^2/b^2\ )\ 1/EJ\ dx = [1/3\ x^3/b^2\ ]_o^b\ 1/EJ$

$= (1/3\ b\ )\ 1/EJ\ = 1/3\ b/EJ$

$L^{XX}_{HG} = \int_o^b (1\ )\ 1/EJ\ dx = [\ x\ ]_o^b\ 1/EJ$

$= (\ b\ )\ 1/EJ\ =\ b/EJ$

$L^{XX}_{GH} = \int_o^b (1\ )\ 1/EJ\ dx = [\ x\ ]_o^b\ 1/EJ$

$= (\ b\ )\ 1/EJ\ =\ b/EJ$

$L^{Xo}_{GA} = \int_o^b (1/2\ x/b - 1/2\ x^2/b^2\ )\ Fb\ 1/EJ\ dx = [1/4\ x^2/b - 1/6\ x^3/b^2\ ]_o^b\ Fb\ 1/EJ$

$= (1/4\ b - 1/6\ b\ )\ Fb\ 1/EJ\ = 1/12\ \ Fb^2/EJ$

$L^{Xo}_{AG} = \int_o^b (1/2\ x/b - 1/2\ x^2/b^2\ )\ Fb\ 1/EJ\ dx = [1/4\ x^2/b - 1/6\ x^3/b^2\ ]_o^b\ Fb\ 1/EJ$

$= (1/4\ b - 1/6\ b\ )\ Fb\ 1/EJ\ = 1/12\ \ Fb^2/EJ$

$L^{Xo}_{HI} = \int_o^b (-1 + 2\,x/b - x^2/b^2\ )\ Fb\ 1/EJ\ dx = [-\ x + x^2/b - 1/3\ x^3/b^2\ ]_o^b\ Fb\ 1/EJ$

$= (-\ b + b - 1/3\ b\ )\ Fb\ 1/EJ\ = -1/3\ \ Fb^2/EJ$

$L^{Xo}_{IH} = \int_o^b (-\ x^2/b^2\ )\ Fb\ 1/EJ\ dx = [-1/3\ x^3/b^2\ ]_o^b\ Fb\ 1/EJ$

$= (-1/3\ b\ )\ Fb\ 1/EJ\ = -1/3\ \ Fb^2/EJ$

$L^{Xo}_{HG} = \int_o^b (3/2 - 2\,x/b + 1/2\ x^2/b^2\ )\ Fb\ 1/EJ\ dx - 1\ \ (-1)\ \ (-1)\ \ Fb^2/EJ$

$= [3/2\ x - x^2/b + 1/6\ x^3/b^2\ ]_o^b\ Fb\ 1/EJ\ - 1\ \ (-1)\ \ (-1)\ \ Fb^2/EJ$

$= (3/2\ b - b + 1/6\ b\ )\ Fb\ 1/EJ\ - 1\ \ (-1)\ \ (-1)\ \ Fb^2/EJ = -1/3\ \ Fb^2/EJ$

$L^{Xo}_{GH} = \int_o^b (\ x/b + 1/2\ x^2/b^2\ )\ Fb\ 1/EJ\ dx - 1\ \ (-1)\ \ (-1)\ \ Fb^2/EJ$

$= [1/2\ x^2/b + 1/6\ x^3/b^2\ ]_o^b\ Fb\ 1/EJ\ - 1\ \ (-1)\ \ (-1)\ \ Fb^2/EJ$

$= (1/2\ b + 1/6\ b\ )\ Fb\ 1/EJ\ - 1\ \ (-1)\ \ (-1)\ \ Fb^2/EJ = -1/3\ \ Fb^2/EJ$

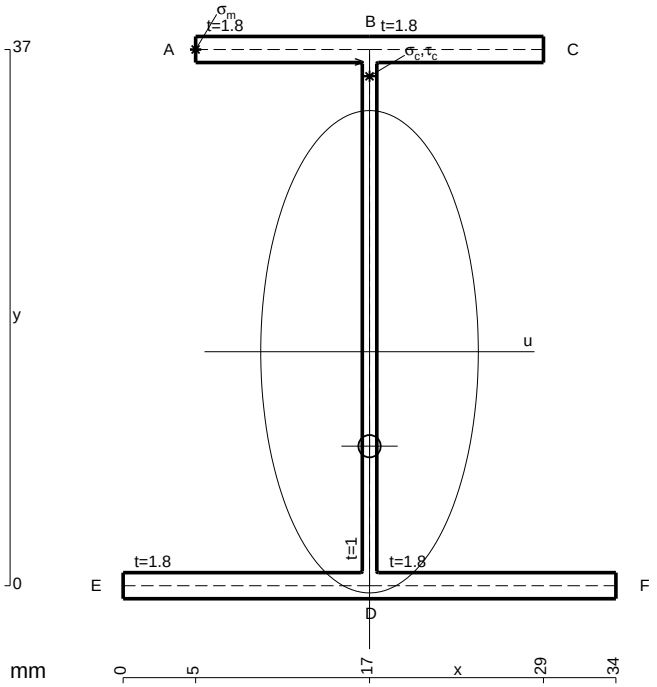

A = 141.4 mm^2
J_u = 39168. mm^4
J_v = 7969. mm^4
J_t = 125.1 mm^4
y_o = -6.518 mm
y_g = 16.15 mm
N = 220. N
T_y = -1320. N
M_x = -407000. Nmm
x_m = 5. mm
y_m = 37. mm
u_m = -12. mm
v_m = 20.85 mm
$\sigma_m = N/A - Mv/J_u$ = 218.3 N/mm^2
x_c = 17. mm
y_c = 37. mm
v_c = 20.85 mm
$\sigma_c = N/A - Mv/J_u$ = 218.3 N/mm^2
$\tau_c = TS^*/tJ_u$ = 30.36 N/mm^2
$\tau_g = TS^*/tJ_u$ = 30.36 N/mm^2
t_c = 440. mm
$\sigma_o = \sqrt{\sigma^2 + 3\tau^2}$ = 224.5 N/mm^2

ESΣ05.xxxx.142

@ Adolfo Zavelani Rossi, Politecnico di Milano, vers.27.03.13 01.12.25

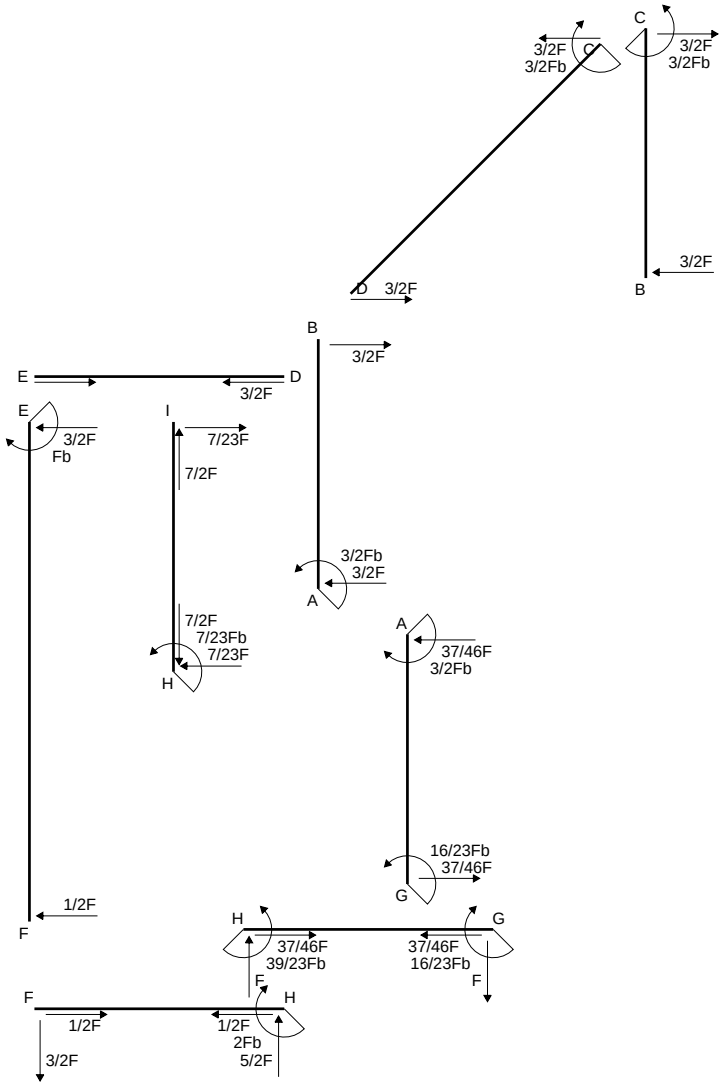
C
3/2F
3/2Fb
C
3/2F
3/2Fb
3/2F
D 3/2F
B
B
3/2F
E
D
3/2F
E
3/2F
Fb
I
7/23F
7/2F
3/2Fb
3/2F
A
7/2F
7/23Fb
7/23F
H
A
37/46F
3/2Fb
16/23Fb
37/46F
G
1/2F
F
H
G
37/46F
39/23Fb
37/46F
16/23Fb
F
F
H
F
1/2F
1/2F
2Fb
5/2F
3/2F

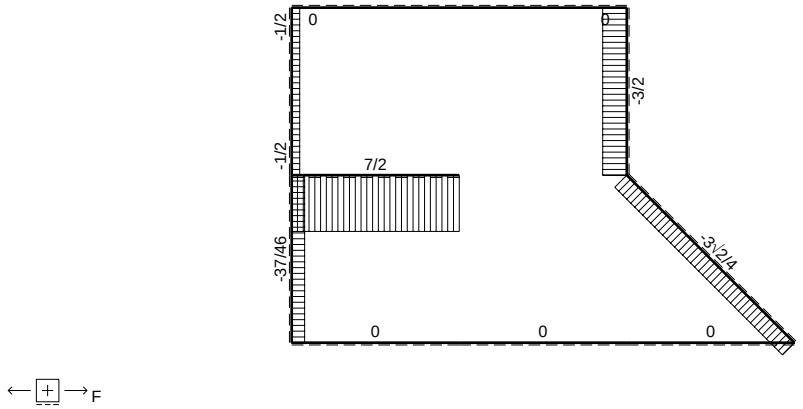
-1/2
0
0
-3/2
-1/2
7/2
-37/46
-3√2/4
0
0
0
F

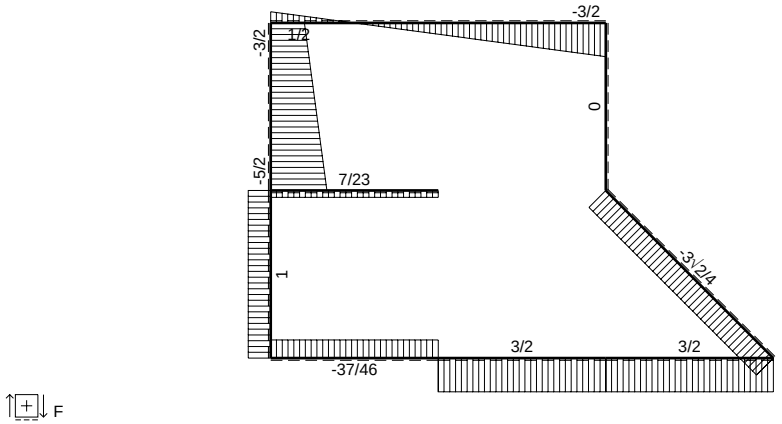
-3/2
-3/2
1/2
0
-5/2
7/23
1
-3√2/4
3/2
3/2
-37/46
F

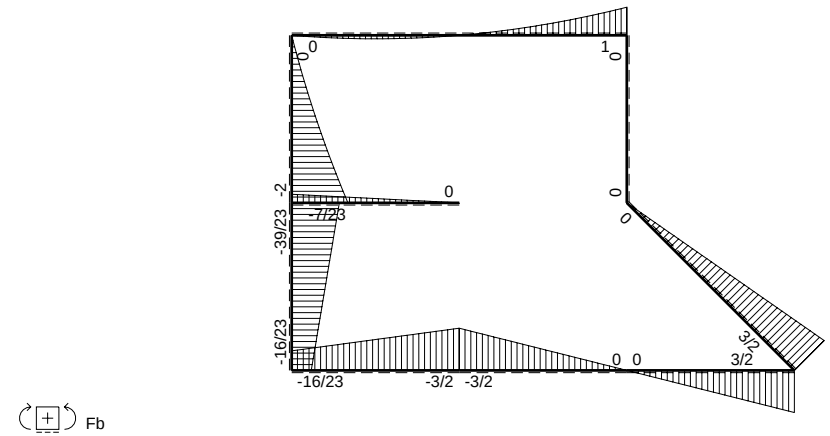
0
1
0
0
-2
0
-7/23
-39/23
0
0
-16/23
0 0
3/2
-16/23
-3/2 -3/2
Fb

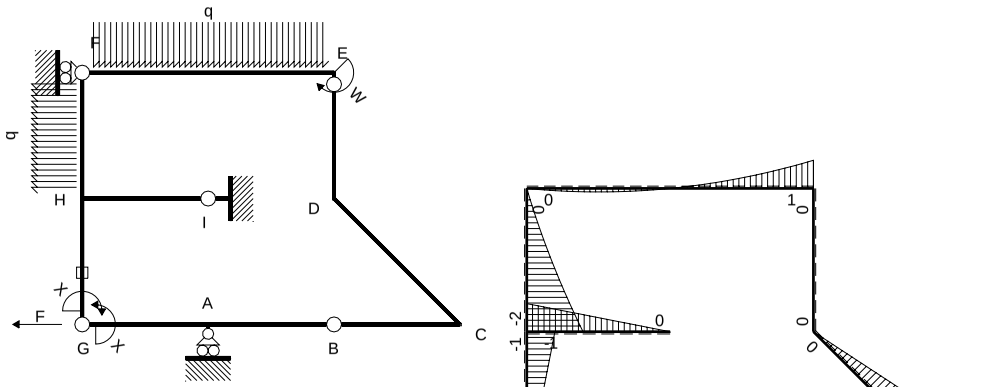

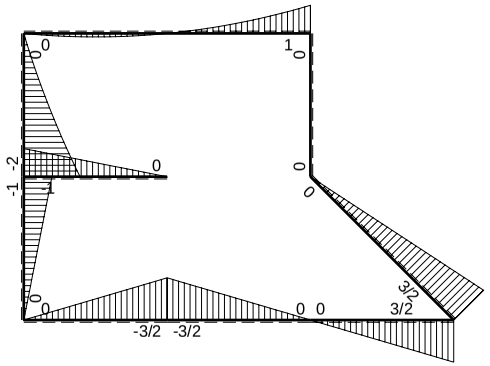

M_0 flessione da carichi assegnati

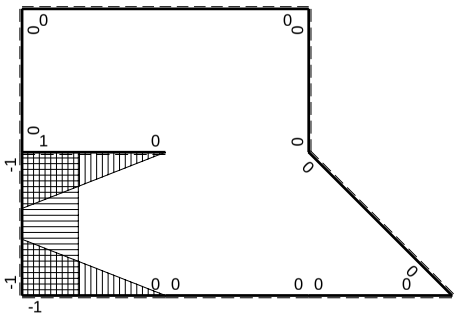

M_x flessione da iperstatica X=1

PROCEDIMENTO E RISULTATI 237118 ESΣ05.xxxx.143

Quadro contributi PLV per iperstatica $X=W_{GA}$

→	$M_x(x)$	$M_o(x)$	M_xM_o	M_xM_x	$\int M_xM_o/EJdx$	$\int XM_xM_x/EJdx$
AB b	0	$-3/2Fb+3/2Fx$	0	0	0	0
BA b	0	$3/2Fx$	0	0		
BC b	0	$3/2Fx$	0	0	0	0
CB b	0	$-3/2Fb+3/2Fx$	0	0		
CD $\sqrt{2}b$	0	$3/2Fb-3\sqrt{2}/4Fx$	0	0	0	0
DE b	0	0	0	0	0	0
ED b	0	0	0	0		
EF 2b	0	$Fb-3/2Fx+1/2qx^2$	0	0	0	0
FE 2b	0	$1/2Fx-1/2qx^2$	0	0		
GA b	$-1+x/b$	$-3/2Fx$	$3/2Fx-3/2Fx^2/b$	$1-2x/b+x^2/b^2$	$1/4Fb^2/EJ$	$1/3Xb/EJ$
AG b	x/b	$3/2Fb-3/2Fx$	$3/2Fx-3/2Fx^2/b$	x^2/b^2		
FH b	0	$-3/2Fx-1/2qx^2$	0	0	0	0
HF b	0	$2Fb-5/2Fx+1/2qx^2$	0	0		
HI b	$1-x/b$	$-Fb+Fx$	$-Fb+2Fx-Fx^2/b$	$1-2x/b+x^2/b^2$	$-1/3Fb^2/EJ$	$1/3Xb/EJ$
IH b	$-x/b$	Fx	$-Fx^2/b$	x^2/b^2		
HG b	-1	$-Fb+Fx$	$Fb-Fx$	1	$1/2Fb^2/EJ$	Xb/EJ
GH b	1	Fx	Fx	1		
HG	elongazione asta $N_{1HG}\varepsilon_{HG}L_{HG}$				$-Fb^2/EJ$	
A	molla nodo $-V_{1A}(V_{0A}+XV_{1A})/k_A$				$-3/4Fb^2/EJ$	$1/4Xb/EJ$
	totali				$-4/3Fb^2/EJ$	$23/12Xb/EJ$
	iperstatica $X=W_{GA}$				16/23Fb	

Sviluppi di calcolo iperstatica

@ Adolfo Zavelani Rossi, Politecnico di Milano, vers.27.03.13 01.12.25

$L^{XX}_{GA} = \int_o^b (1 - 2\,x/b + x^2/b^2)\ 1/EJ\ dx = [\ x - x^2/b + 1/3\ x^3/b^2\ ]_o^b\ 1/EJ$

$= (\ b - b + 1/3\ b\ )\ 1/EJ\ = 1/3\ b/EJ$

$L^{XX}_{AG} = \int_o^b (\ x^2/b^2\ )\ 1/EJ\ dx = [1/3\ x^3/b^2\ ]_o^b\ 1/EJ$

$= (1/3\ b\ )\ 1/EJ\ = 1/3\ b/EJ$

$L^{XX}_{HI} = \int_o^b (1 - 2\,x/b + x^2/b^2)\ 1/EJ\ dx = [\ x - x^2/b + 1/3\ x^3/b^2\ ]_o^b\ 1/EJ$

$= (\ b - b + 1/3\ b\ )\ 1/EJ\ = 1/3\ b/EJ$

$L^{XX}_{IH} = \int_o^b (\ x^2/b^2\ )\ 1/EJ\ dx = [1/3\ x^3/b^2\ ]_o^b\ 1/EJ$

$= (1/3\ b\ )\ 1/EJ\ = 1/3\ b/EJ$

$L^{XX}_{HG} = \int_o^b (1)\ 1/EJ\ dx = [\ x\ ]_o^b\ 1/EJ$

$= (\ b\ )\ 1/EJ\ =\ b/EJ$

$L^{XX}_{GH} = \int_o^b (1)\ 1/EJ\ dx = [\ x\ ]_o^b\ 1/EJ$

$= (\ b\ )\ 1/EJ\ =\ b/EJ$

$L^{Xo}_{GA} = \int_o^b (3/2\ x/b - 3/2\ x^2/b^2)\ Fb\ 1/EJ\ dx = [3/4\ x^2/b - 1/2\ x^3/b^2\ ]_o^b\ Fb\ 1/EJ$

$= (3/4\ b - 1/2\ b\ )\ Fb\ 1/EJ\ = 1/4\ \ Fb^2/EJ$

$L^{Xo}_{AG} = \int_o^b (3/2\ x/b - 3/2\ x^2/b^2)\ Fb\ 1/EJ\ dx = [3/4\ x^2/b - 1/2\ x^3/b^2\ ]_o^b\ Fb\ 1/EJ$

$= (3/4\ b - 1/2\ b\ )\ Fb\ 1/EJ\ = 1/4\ \ Fb^2/EJ$

$L^{Xo}_{HI} = \int_o^b (-1 + 2\,x/b - x^2/b^2)\ Fb\ 1/EJ\ dx = [-\ x + x^2/b - 1/3\ x^3/b^2\ ]_o^b\ Fb\ 1/EJ$

$= (-\ b + b - 1/3\ b\ )\ Fb\ 1/EJ\ = -1/3\ \ Fb^2/EJ$

$L^{Xo}_{IH} = \int_o^b (-\ x^2/b^2\ )\ Fb\ 1/EJ\ dx = [-1/3\ x^3/b^2\ ]_o^b\ Fb\ 1/EJ$

$= (-1/3\ b\ )\ Fb\ 1/EJ\ = -1/3\ \ Fb^2/EJ$

$L^{Xo}_{HG} = \int_o^b (1 - x/b\ )\ Fb\ 1/EJ\ dx - 1\ \ (-1)\ \ (-1)\ \ Fb^2/EJ = [\ x - 1/2\ x^2/b\ ]_o^b\ Fb\ 1/EJ\ \ - 1\ \ (-1)\ \ (-1)\ \ Fb^2/EJ$

$= (\ b - 1/2\ b\ )\ Fb\ 1/EJ\ \ - 1\ \ (-1)\ \ (-1)\ \ Fb^2/EJ = -1/2\ \ Fb^2/EJ$

$L^{Xo}_{GH} = \int_o^b (\ x/b\ )\ Fb\ 1/EJ\ dx - 1\ \ (-1)\ \ (-1)\ \ Fb^2/EJ = [1/2\ x^2/b\ ]_o^b\ Fb\ 1/EJ\ \ - 1\ \ (-1)\ \ (-1)\ \ Fb^2/EJ$

$= (1/2\ b\ )\ Fb\ 1/EJ\ \ - 1\ \ (-1)\ \ (-1)\ \ Fb^2/EJ = -1/2\ \ Fb^2/EJ$

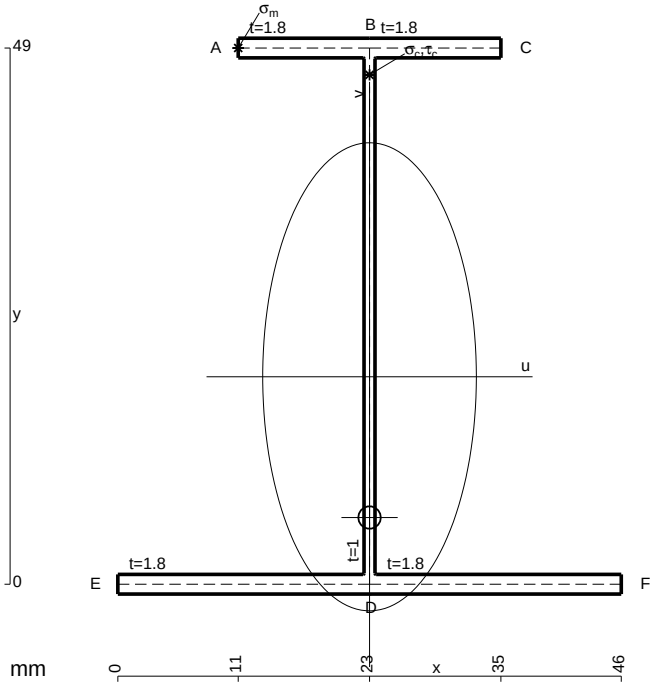

A = 175. mm^2
J_u = 80057. mm^4
J_v = 16674. mm^4
J_t = 152.4 mm^4
y_o = -12.86 mm
y_g = 18.96 mm
N = -285. N
T_y = -1425. N
M_x = -615600. Nmm
x_m = 11. mm
y_m = 49. mm
u_m = -12. mm
v_m = 30.04 mm
$\sigma_m = N/A - Mv/J_u$ = 229.4 N/mm^2
x_c = 23. mm
y_c = 49. mm
v_c = 30.04 mm
$\sigma_c = N/A - Mv/J_u$ = 229.4 N/mm^2
$\tau_c = TS^*/tJ_u$ = 23.1 N/mm^2
$\tau_g = TS^*/tJ_u$ = 23.1 N/mm^2
t_c = 570. mm
$\sigma_o = \sqrt{\sigma^2 + 3\tau^2}$ = 232.9 N/mm^2

ESΣ05.xxxx.143

@ Adolfo Zavelani Rossi, Politecnico di Milano, vers.27.03.13 01.12.25

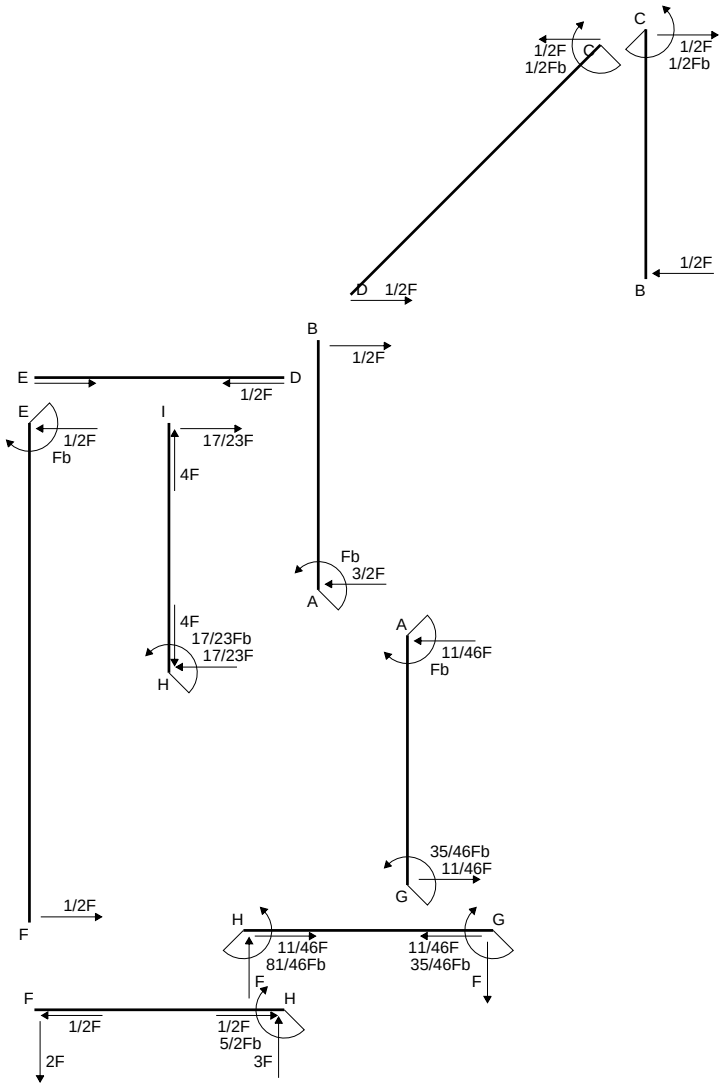
C
1/2F
1/2Fb
C
1/2F
1/2Fb
D 1/2F
B
1/2F
B
1/2F
E
D
1/2F
E
1/2F
Fb
I
17/23F
4F
Fb
3/2F
A
4F
17/23Fb
17/23F
H
A
11/46F
Fb
35/46Fb
11/46F
G
1/2F
F
H
G
11/46F
81/46Fb
11/46F
35/46Fb
F
F
H
1/2F
1/2F
5/2Fb
3F
2F

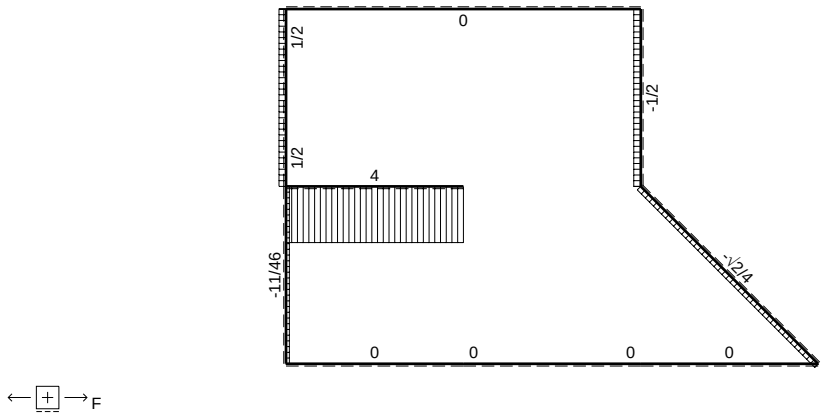
0
1/2
-1/2
1/2
4
-11/46
-1/2/4
0
0
0
0
F

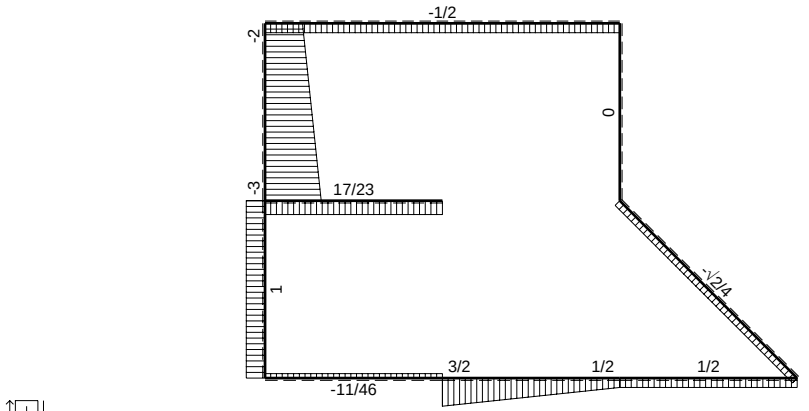
-1/2
-2
0
-3
17/23
1
-1/2/4
3/2
1/2
1/2
-11/46
F

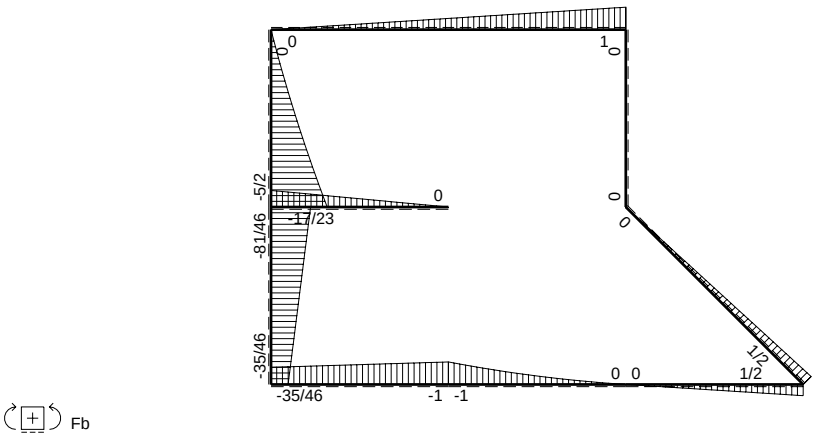
0
1
0
0
-5/2
0
-17/23
-81/46
0
0
-35/46
1/2
0 0
1/2
-35/46
-1 -1
Fb

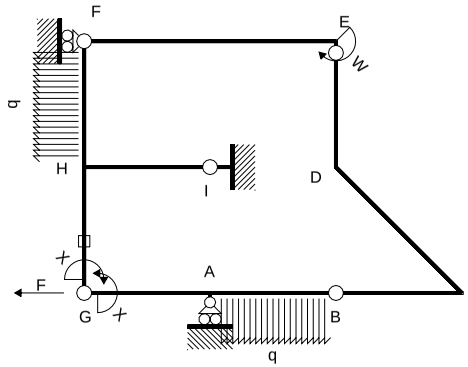

Schema di calcolo iperstatico

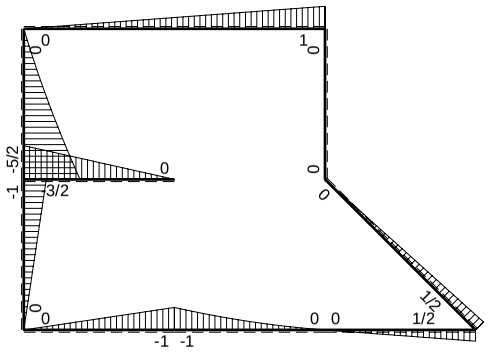

M_0 flessione da carichi assegnati

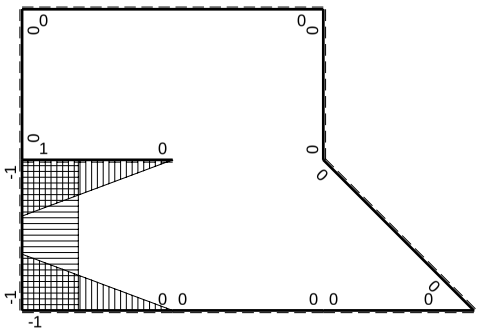

M_x flessione da iperstatica X=1

PROCEDIMENTO E RISULTATI 241258 ESΣ05.xxxx.144

Quadro contributi PLV per iperstatica $X=W_{GA}$

→	$M_x(x)$	$M_0(x)$	M_xM_0	M_xM_x	$\int M_xM_0/EJdx$	$\int XM_xM_x/EJdx$
AB b	0	$-Fb+3/2Fx-1/2qx^2$	0	0	0	0
BA b	0	$1/2Fx+1/2qx^2$	0	0		
BC b	0	1/2Fx	0	0	0	0
CB b	0	-1/2Fb+1/2Fx	0	0		
CD √2b	0	1/2Fb-√2/4Fx	0	0	0	0
DE b	0	0	0	0	0	0
ED b	0	0	0	0		
EF 2b	0	Fb-1/2Fx	0	0	0	0
FE 2b	0	-1/2Fx	0	0		
GA b	-1+x/b	-Fx	$Fx-Fx^2/b$	$1-2x/b+x^2/b^2$	$1/6Fb^2/EJ$	1/3Xb/EJ
AG b	x/b	Fb-Fx	$Fx-Fx^2/b$	x^2/b^2		
FH b	0	$-2Fx-1/2qx^2$	0	0	0	0
HF b	0	$5/2Fb-3Fx+1/2qx^2$	0	0		
HI b	1-x/b	-3/2Fb+3/2Fx	$-3/2Fb+3Fx-3/2Fx^2/b$	$1-2x/b+x^2/b^2$	$-1/2Fb^2/EJ$	1/3Xb/EJ
IH b	-x/b	3/2Fx	$-3/2Fx^2/b$	x^2/b^2		
HG b	-1	-Fb+Fx	Fb-Fx	1	$1/2Fb^2/EJ$	Xb/EJ
GH b	1	Fx	Fx	1		
HG	elongazione asta $N_{1HG}\varepsilon_{HG}L_{HG}$				$-Fb^2/EJ$	
A	molla nodo $-V_{1A}(V_{0A}+XV_{1A})/k_A$				$-5/8Fb^2/EJ$	1/4Xb/EJ
	totali				$-35/24Fb^2/EJ$	23/12Xb/EJ
	iperstatica $X=W_{GA}$				35/46Fb	

Sviluppi di calcolo iperstatica

@ Adolfo Zavelani Rossi, Politecnico di Milano, vers.27.03.13 01.12.25

$L^{XX}_{GA} = \int_o^b (1 - 2\,x/b + x^2/b^2)\ 1/EJ\ dx = [\,x - x^2/b + 1/3\,x^3/b^2\,]_o^b\ 1/EJ$

$= (\,b - b + 1/3\,b\,)\ 1/EJ = 1/3\ b/EJ$

$L^{XX}_{AG} = \int_o^b (\,x^2/b^2\,)\ 1/EJ\ dx = [1/3\,x^3/b^2\,]_o^b\ 1/EJ$

$= (1/3\,b\,)\ 1/EJ = 1/3\ b/EJ$

$L^{XX}_{HI} = \int_o^b (1 - 2\,x/b + x^2/b^2)\ 1/EJ\ dx = [\,x - x^2/b + 1/3\,x^3/b^2\,]_o^b\ 1/EJ$

$= (\,b - b + 1/3\,b\,)\ 1/EJ = 1/3\ b/EJ$

$L^{XX}_{IH} = \int_o^b (\,x^2/b^2\,)\ 1/EJ\ dx = [1/3\,x^3/b^2\,]_o^b\ 1/EJ$

$= (1/3\,b\,)\ 1/EJ = 1/3\ b/EJ$

$L^{XX}_{HG} = \int_o^b (1)\ 1/EJ\ dx = [\,x\,]_o^b\ 1/EJ$

$= (\,b\,)\ 1/EJ = b/EJ$

$L^{XX}_{GH} = \int_o^b (1)\ 1/EJ\ dx = [\,x\,]_o^b\ 1/EJ$

$= (\,b\,)\ 1/EJ = b/EJ$

$L^{Xo}_{GA} = \int_o^b (\,x/b - x^2/b^2\,)\ Fb\ 1/EJ\ dx = [1/2\,x^2/b - 1/3\,x^3/b^2\,]_o^b\ Fb\ 1/EJ$

$= (1/2\,b - 1/3\,b\,)\ Fb\ 1/EJ = 1/6\ Fb^2/EJ$

$L^{Xo}_{AG} = \int_o^b (\,x/b - x^2/b^2\,)\ Fb\ 1/EJ\ dx = [1/2\,x^2/b - 1/3\,x^3/b^2\,]_o^b\ Fb\ 1/EJ$

$= (1/2\,b - 1/3\,b\,)\ Fb\ 1/EJ = 1/6\ Fb^2/EJ$

$L^{Xo}_{HI} = \int_o^b (-3/2 + 3\,x/b - 3/2\,x^2/b^2\,)\ Fb\ 1/EJ\ dx = [-3/2\,x + 3/2\,x^2/b - 1/2\,x^3/b^2\,]_o^b\ Fb\ 1/EJ$

$= (-3/2\,b + 3/2\,b - 1/2\,b\,)\ Fb\ 1/EJ = -1/2\ Fb^2/EJ$

$L^{Xo}_{IH} = \int_o^b (-3/2\,x^2/b^2\,)\ Fb\ 1/EJ\ dx = [-1/2\,x^3/b^2\,]_o^b\ Fb\ 1/EJ$

$= (-1/2\,b\,)\ Fb\ 1/EJ = -1/2\ Fb^2/EJ$

$L^{Xo}_{HG} = \int_o^b (1 - x/b\,)\ Fb\ 1/EJ\ dx - 1\ \ (-1)\ \ (-1)\ \ Fb^2/EJ = [\,x - 1/2\,x^2/b\,]_o^b\ Fb\ 1/EJ\ \ - 1\ \ (-1)\ \ (-1)\ \ Fb^2/EJ$

$= (\,b - 1/2\,b\,)\ Fb\ 1/EJ\ \ - 1\ \ (-1)\ \ (-1)\ \ Fb^2/EJ = -1/2\ \ Fb^2/EJ$

$L^{Xo}_{GH} = \int_o^b (\,x/b\,)\ Fb\ 1/EJ\ dx - 1\ \ (-1)\ \ (-1)\ \ Fb^2/EJ = [1/2\,x^2/b\,]_o^b\ Fb\ 1/EJ\ \ - 1\ \ (-1)\ \ (-1)\ \ Fb^2/EJ$

$= (1/2\,b\,)\ Fb\ 1/EJ\ \ - 1\ \ (-1)\ \ (-1)\ \ Fb^2/EJ = -1/2\ \ Fb^2/EJ$

PROCEDIMENTO E RISULTATI 241258 ESΣ05.xxxx.144

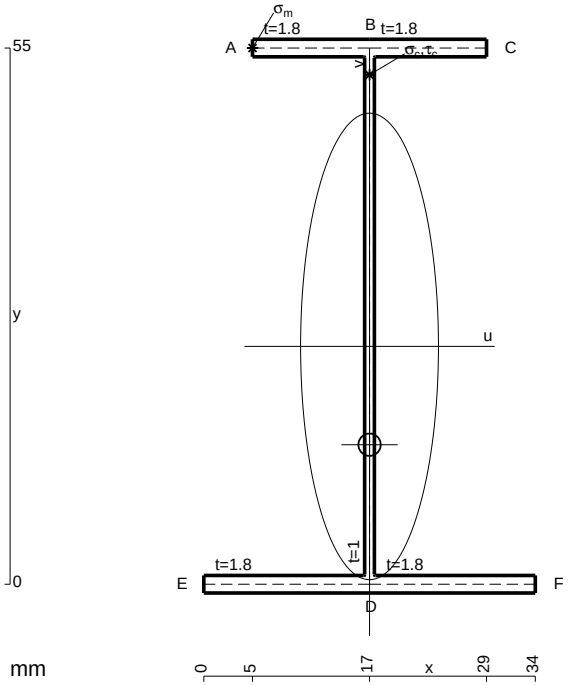

A = 159.4 mm^2
J_u = 91280. mm^4
J_v = 7969. mm^4
J_t = 131.1 mm^4
y_o = -10.08 mm
y_g = 24.39 mm
N = 215. N
T_y = -1290. N
M_x = -698750. Nmm
x_m = 5. mm
y_m = 55. mm
u_m = -12. mm
v_m = 30.61 mm
$\sigma_m = N/A - Mv/J_u$ = 235.6 N/mm^2
x_c = 17. mm
y_c = 55. mm
v_c = 30.61 mm
$\sigma_c = N/A - Mv/J_u$ = 235.6 N/mm^2
$\tau_c = TS^*/tJ_u$ = 18.69 N/mm^2
$\tau_g = TS^*/tJ_u$ = 18.69 N/mm^2
t_c = 430. mm
$\sigma_o = \sqrt{\sigma^2 + 3\tau^2}$ = 237.8 N/mm^2

@ Adolfo Zavelani Rossi, Politecnico di Milano, vers.27.03.13 01.12.25

ESΣ05.xxxx.144

@ Adolfo Zavelani Rossi, Politecnico di Milano, vers.27.03.13 01.12.25

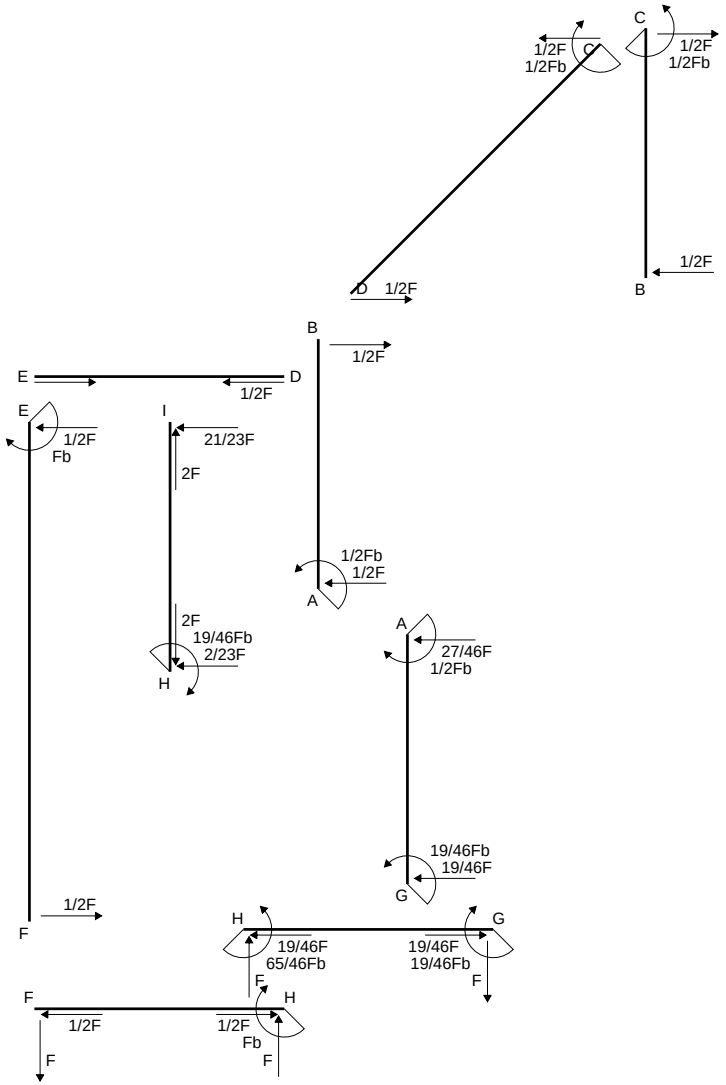
C
1/2F
1/2Fb
C
1/2F
1/2Fb
1/2F
D 1/2F
B
B
1/2F
E
D
1/2F
E
1/2F
Fb
I
21/23F
2F
1/2Fb
1/2F
A
2F
19/46Fb
2/23F
H
A
27/46F
1/2Fb
19/46Fb
19/46F
G
1/2F
F
H
G
19/46F
65/46Fb
19/46F
19/46Fb
F
F
H
F
1/2F
1/2F
Fb
F
F

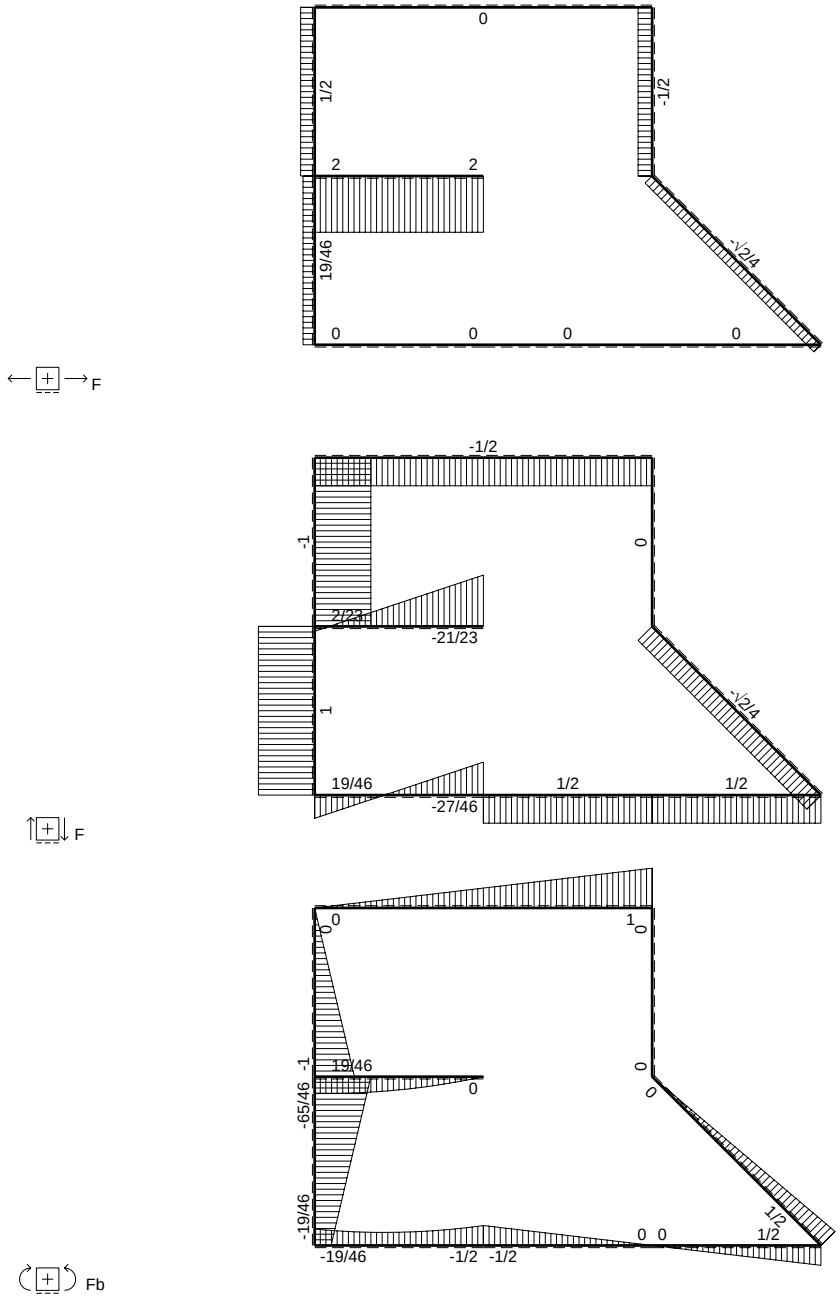
F
0
1/2
-1/2
2
2
19/46
-1/2/4
0
0
0
0
F
-1/2
-1
0
2/23
-21/23
1
-1/2/4
19/46
1/2
1/2
-27/46
Fb
0
0
1
0
-1
19/46
0
-65/46
0
0
-19/46
1/2
0 0
1/2
-19/46
-1/2
-1/2

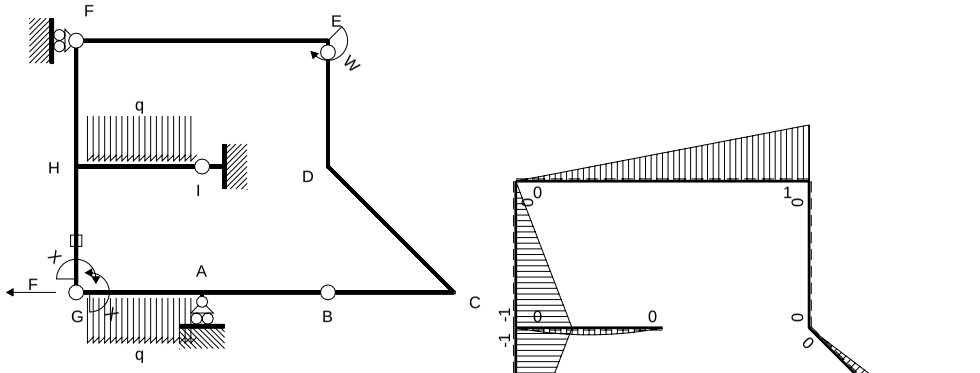

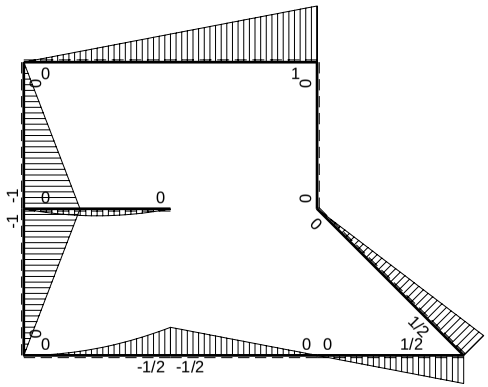

M_0 flessione da carichi assegnati

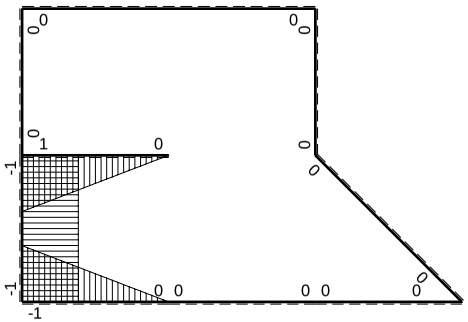

M_x flessione da iperstatica X=1

Quadro contributi PLV per iperstatica $X=W_{GA}$

→	$M_x(x)$	$M_o(x)$	M_xM_o	M_xM_x	$\int M_xM_o/EJdx$	$\int XM_xM_x/EJdx$
AB b	0	-1/2Fb+1/2Fx	0	0	0	0
BA b	0	1/2Fx	0	0		
BC b	0	1/2Fx	0	0	0	0
CB b	0	-1/2Fb+1/2Fx	0	0		
CD √2b	0	1/2Fb-√2/4Fx	0	0	0	0
DE b	0	0	0	0	0	0
ED b	0	0	0	0		
EF 2b	0	Fb-1/2Fx	0	0	0	0
FE 2b	0	-1/2Fx	0	0		
GA b	-1+x/b	$-1/2qx^2$	$1/2Fx^2/b-1/2qx^3/b$	$1-2x/b+x^2/b^2$	$1/24Fb^2/EJ$	1/3Xb/EJ
AG b	x/b	$1/2Fb-Fx+1/2qx^2$	$1/2Fx-Fx^2/b+1/2qx^3/b$	x^2/b^2		
FH b	0	-Fx	0	0	0	0
HF b	0	Fb-Fx	0	0		
HI b	1-x/b	$1/2Fx-1/2qx^2$	$1/2Fx-Fx^2/b+1/2qx^3/b$	$1-2x/b+x^2/b^2$	$1/24Fb^2/EJ$	1/3Xb/EJ
IH b	-x/b	$-1/2Fx+1/2qx^2$	$1/2Fx^2/b-1/2qx^3/b$	x^2/b^2		
HG b	-1	-Fb+Fx	Fb-Fx	1	$1/2Fb^2/EJ$	Xb/EJ
GH b	1	Fx	Fx	1		
HG	elongazione asta $N_{1HG}\varepsilon_{HG}L_{HG}$				$-Fb^2/EJ$	
A	molla nodo $-V_{1A}(V_{0A}+XV_{1A})/k_A$				$-3/8Fb^2/EJ$	1/4Xb/EJ
	totali				$-19/24Fb^2/EJ$	23/12Xb/EJ
	iperstatica $X=W_{GA}$				19/46Fb	

Sviluppi di calcolo iperstatica

$L^{XX}_{GA} = \int_o^b (1 - 2\,x/b + x^2/b^2)\ 1/EJ\ dx = [\,x - x^2/b + 1/3\,x^3/b^2\,]_o^b\ 1/EJ$

$= (\,b - b + 1/3\,b\,)\ 1/EJ = 1/3\ b/EJ$

$L^{XX}_{AG} = \int_o^b (\,x^2/b^2\,)\ 1/EJ\ dx = [1/3\,x^3/b^2\,]_o^b\ 1/EJ$

$= (1/3\,b)\ 1/EJ = 1/3\ b/EJ$

$L^{XX}_{HI} = \int_o^b (1 - 2\,x/b + x^2/b^2)\ 1/EJ\ dx = [\,x - x^2/b + 1/3\,x^3/b^2\,]_o^b\ 1/EJ$

$= (\,b - b + 1/3\,b\,)\ 1/EJ = 1/3\ b/EJ$

$L^{XX}_{IH} = \int_o^b (\,x^2/b^2\,)\ 1/EJ\ dx = [1/3\,x^3/b^2\,]_o^b\ 1/EJ$

$= (1/3\,b)\ 1/EJ = 1/3\ b/EJ$

$L^{XX}_{HG} = \int_o^b (1)\ 1/EJ\ dx = [\,x\,]_o^b\ 1/EJ$

$= (\,b\,)\ 1/EJ = b/EJ$

$L^{XX}_{GH} = \int_o^b (1)\ 1/EJ\ dx = [\,x\,]_o^b\ 1/EJ$

$= (\,b\,)\ 1/EJ = b/EJ$

$L^{Xo}_{GA} = \int_o^b (1/2\,x^2/b^2 - 1/2\,x^3/b^3)\ Fb\ 1/EJ\ dx = [1/6\,x^3/b^2 - 1/8\,x^4/b^3\,]_o^b\ Fb\ 1/EJ$

$= (1/6\,b - 1/8\,b)\ Fb\ 1/EJ = 1/24\ Fb^2/EJ$

$L^{Xo}_{AG} = \int_o^b (1/2\,x/b - x^2/b^2 + 1/2\,x^3/b^3)\ Fb\ 1/EJ\ dx = [1/4\,x^2/b - 1/3\,x^3/b^2 + 1/8\,x^4/b^3\,]_o^b\ Fb\ 1/EJ$

$= (1/4\,b - 1/3\,b + 1/8\,b)\ Fb\ 1/EJ = 1/24\ Fb^2/EJ$

$L^{Xo}_{HI} = \int_o^b (1/2\,x/b - x^2/b^2 + 1/2\,x^3/b^3)\ Fb\ 1/EJ\ dx = [1/4\,x^2/b - 1/3\,x^3/b^2 + 1/8\,x^4/b^3\,]_o^b\ Fb\ 1/EJ$

$= (1/4\,b - 1/3\,b + 1/8\,b)\ Fb\ 1/EJ = 1/24\ Fb^2/EJ$

$L^{Xo}_{IH} = \int_o^b (1/2\,x^2/b^2 - 1/2\,x^3/b^3)\ Fb\ 1/EJ\ dx = [1/6\,x^3/b^2 - 1/8\,x^4/b^3\,]_o^b\ Fb\ 1/EJ$

$= (1/6\,b - 1/8\,b)\ Fb\ 1/EJ = 1/24\ Fb^2/EJ$

$L^{Xo}_{HG} = \int_o^b (1 - x/b)\ Fb\ 1/EJ\ dx - 1\ \ (-1)\ \ (-1)\ \ Fb^2/EJ = [\,x - 1/2\,x^2/b\,]_o^b\ Fb\ 1/EJ\ \ - 1\ \ (-1)\ \ (-1)\ \ Fb^2/EJ$

$= (\,b - 1/2\,b\,)\ Fb\ 1/EJ\ \ - 1\ \ (-1)\ \ (-1)\ \ Fb^2/EJ = -1/2\ \ Fb^2/EJ$

$L^{Xo}_{GH} = \int_o^b (\,x/b\,)\ Fb\ 1/EJ\ dx - 1\ \ (-1)\ \ (-1)\ \ Fb^2/EJ = [1/2\,x^2/b\,]_o^b\ Fb\ 1/EJ\ \ - 1\ \ (-1)\ \ (-1)\ \ Fb^2/EJ$

$= (1/2\,b)\ Fb\ 1/EJ\ \ - 1\ \ (-1)\ \ (-1)\ \ Fb^2/EJ = -1/2\ \ Fb^2/EJ$

PROCEDIMENTO E RISULTATI 236825 ESΣ05.xxxx.145

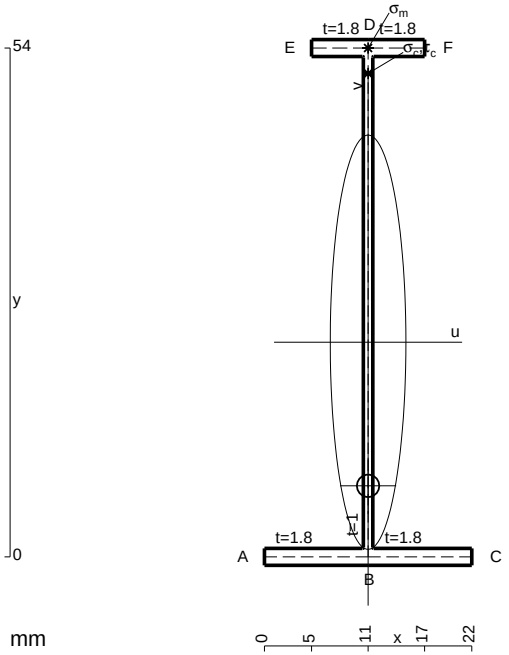

A = 115.2 mm^2
J_u = 55687. mm^4
J_v = 1856. mm^4
J_t = 84.1 mm^4
y_o = -15.24 mm
y_g = 22.78 mm
N = 255. N
T_y = -510. N
M_x = -351900. Nmm
x_m = 11. mm
y_m = 54. mm
v_m = 31.22 mm
$\sigma_m = N/A - Mv/J_u$ = 199.5 N/mm^2
y_c = 2. mm
u_c = -11. mm
v_c = -20.78 mm
$\sigma_c = N/A - Mv/J_u$ = 199.5 N/mm^2
$\tau_c = TS^*/tJ_u$ = 6.176 N/mm^2
$\tau_g = TS^*/tJ_u$ = 6.176 N/mm^2
t_c = 510. mm
$\sigma_o = \sqrt{\sigma^2 + 3\tau^2}$ = 199.8 N/mm^2

@ Adolfo Zavelani Rossi, Politecnico di Milano, vers.27.03.13 01.12.25

ESΣ05.xxxx.145

@ Adolfo Zavelani Rossi, Politecnico di Milano, vers.27.03.13 01.12.25

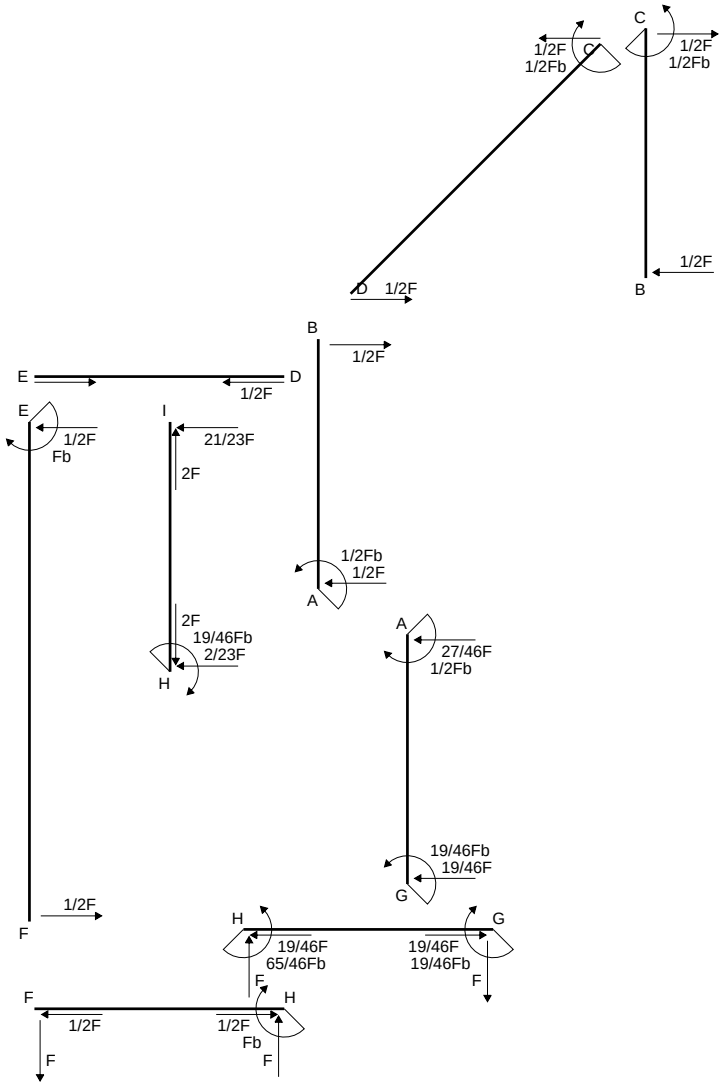
C
1/2F
1/2Fb
C
1/2F
1/2Fb
1/2F
D 1/2F
B
B
1/2F
E
D
1/2F
E
1/2F
Fb
I
21/23F
2F
1/2Fb
1/2F
A
2F
19/46Fb
2/23F
H
A
27/46F
1/2Fb
19/46Fb
19/46F
G
1/2F
F
H
G
19/46F
65/46Fb
19/46F
19/46Fb
F
F
H
F
1/2F
1/2F
Fb
F
F

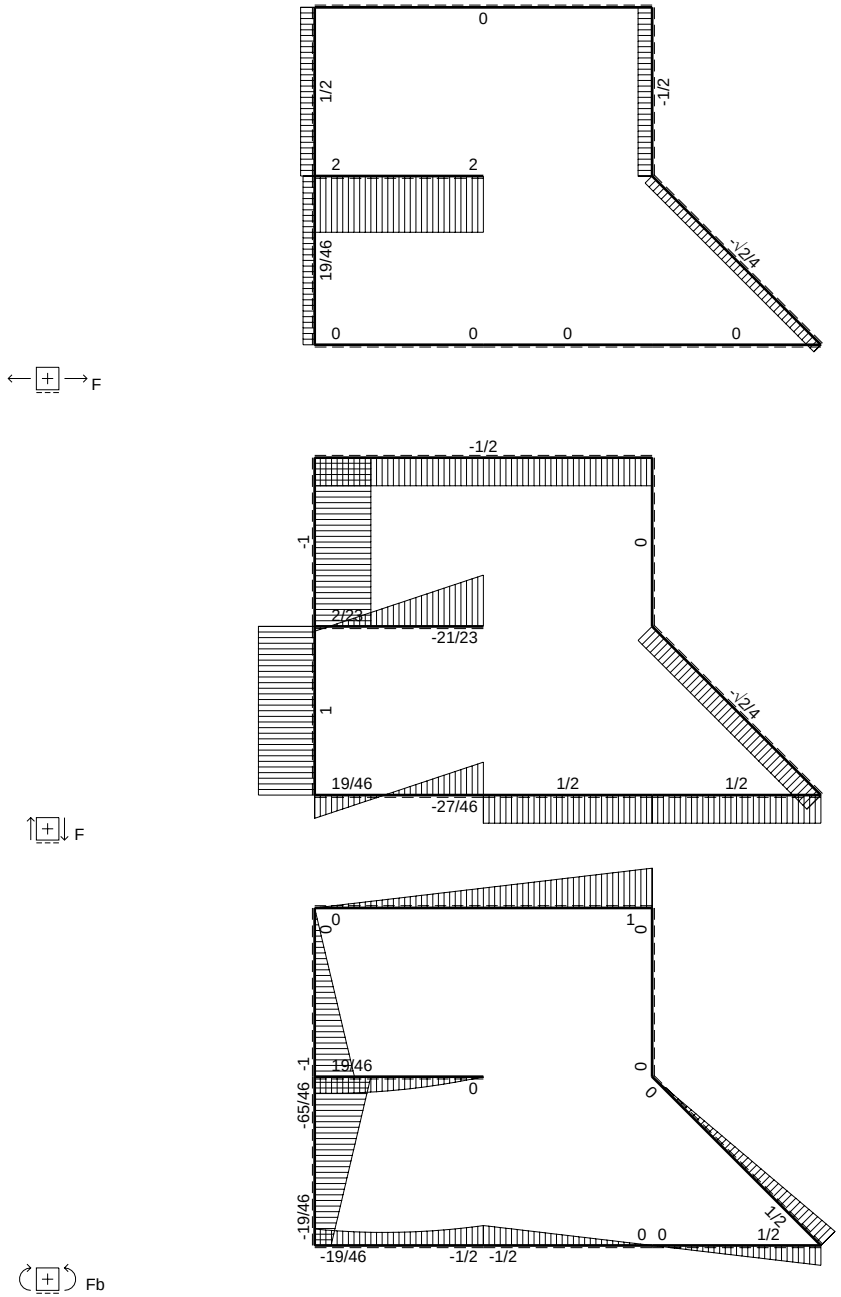
0
1/2
-1/2
2
2
19/46
-1/2/4
0
0
0
0
F
-1/2
-1
0
2/23
-21/23
1
-1/2/4
19/46
1/2
1/2
-27/46
F
0
0
1
0
-1
19/46
0
-65/46
0
0
-19/46
1/2
0 0
1/2
-19/46
-1/2
-1/2
Fb

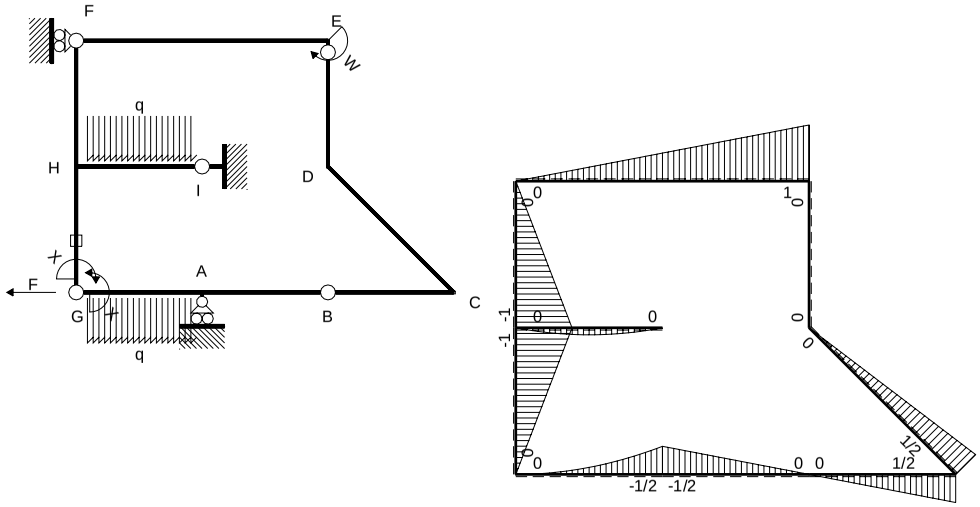
F
E
q
H
I
D
A
F
G
B
C
q
0
1
0
0
0

$L^{XX}_{GA} = \int_o^b (1 - 2\,x/b + x^2/b^2)\ 1/EJ\ dx = [\ x - x^2/b + 1/3\ x^3/b^2\ ]_o^b\ 1/EJ$

$= (\ b - b + 1/3\ b\ )\ 1/EJ\ = 1/3\ b/EJ$

$L^{XX}_{AG} = \int_o^b (\ x^2/b^2\ )\ 1/EJ\ dx = [1/3\ x^3/b^2\ ]_o^b\ 1/EJ$

$= (1/3\ b\ )\ 1/EJ\ = 1/3\ b/EJ$

$L^{XX}_{HI} = \int_o^b (1 - 2\,x/b + x^2/b^2)\ 1/EJ\ dx = [\ x - x^2/b + 1/3\ x^3/b^2\ ]_o^b\ 1/EJ$

$= (\ b - b + 1/3\ b\ )\ 1/EJ\ = 1/3\ b/EJ$

$L^{XX}_{IH} = \int_o^b (\ x^2/b^2\ )\ 1/EJ\ dx = [1/3\ x^3/b^2\ ]_o^b\ 1/EJ$

$= (1/3\ b\ )\ 1/EJ\ = 1/3\ b/EJ$

$L^{XX}_{HG} = \int_o^b (1\ )\ 1/EJ\ dx = [\ x\ ]_o^b\ 1/EJ$

$= (\ b\ )\ 1/EJ\ =\ b/EJ$

$L^{XX}_{GH} = \int_o^b (1\ )\ 1/EJ\ dx = [\ x\ ]_o^b\ 1/EJ$

$= (\ b\ )\ 1/EJ\ =\ b/EJ$

$L^{Xo}_{GA} = \int_o^b (1/2\ x^2/b^2 - 1/2\ x^3/b^3\ )\ Fb\ 1/EJ\ dx = [1/6\ x^3/b^2 - 1/8\ x^4/b^3\ ]_o^b\ Fb\ 1/EJ$

$= (1/6\ b - 1/8\ b\ )\ Fb\ 1/EJ\ = 1/24\ \ Fb^2/EJ$

$L^{Xo}_{AG} = \int_o^b (1/2\ x/b - x^2/b^2 + 1/2\ x^3/b^3\ )\ Fb\ 1/EJ\ dx = [1/4\ x^2/b - 1/3\ x^3/b^2 + 1/8\ x^4/b^3\ ]_o^b\ Fb\ 1/EJ$

$= (1/4\ b - 1/3\ b + 1/8\ b\ )\ Fb\ 1/EJ\ = 1/24\ \ Fb^2/EJ$

$L^{Xo}_{HI} = \int_o^b (1/2\ x/b - x^2/b^2 + 1/2\ x^3/b^3\ )\ Fb\ 1/EJ\ dx = [1/4\ x^2/b - 1/3\ x^3/b^2 + 1/8\ x^4/b^3\ ]_o^b\ Fb\ 1/EJ$

$= (1/4\ b - 1/3\ b + 1/8\ b\ )\ Fb\ 1/EJ\ = 1/24\ \ Fb^2/EJ$

$L^{Xo}_{IH} = \int_o^b (1/2\ x^2/b^2 - 1/2\ x^3/b^3\ )\ Fb\ 1/EJ\ dx = [1/6\ x^3/b^2 - 1/8\ x^4/b^3\ ]_o^b\ Fb\ 1/EJ$

$= (1/6\ b - 1/8\ b\ )\ Fb\ 1/EJ\ = 1/24\ \ Fb^2/EJ$

$L^{Xo}_{HG} = \int_o^b (1 - x/b\ )\ Fb\ 1/EJ\ dx - 1\ \ (-1)\ \ (-1)\ \ Fb^2/EJ = [\ x - 1/2\ x^2/b\ ]_o^b\ Fb\ 1/EJ\ \ - 1\ \ (-1)\ \ (-1)\ \ Fb^2/EJ$

$= (\ b - 1/2\ b\ )\ Fb\ 1/EJ\ \ - 1\ \ (-1)\ \ (-1)\ \ Fb^2/EJ = -1/2\ \ Fb^2/EJ$

$L^{Xo}_{GH} = \int_o^b (\ x/b\ )\ Fb\ 1/EJ\ dx - 1\ \ (-1)\ \ (-1)\ \ Fb^2/EJ = [1/2\ x^2/b\ ]_o^b\ Fb\ 1/EJ\ \ - 1\ \ (-1)\ \ (-1)\ \ Fb^2/EJ$

$= (1/2\ b\ )\ Fb\ 1/EJ\ \ - 1\ \ (-1)\ \ (-1)\ \ Fb^2/EJ = -1/2\ \ Fb^2/EJ$

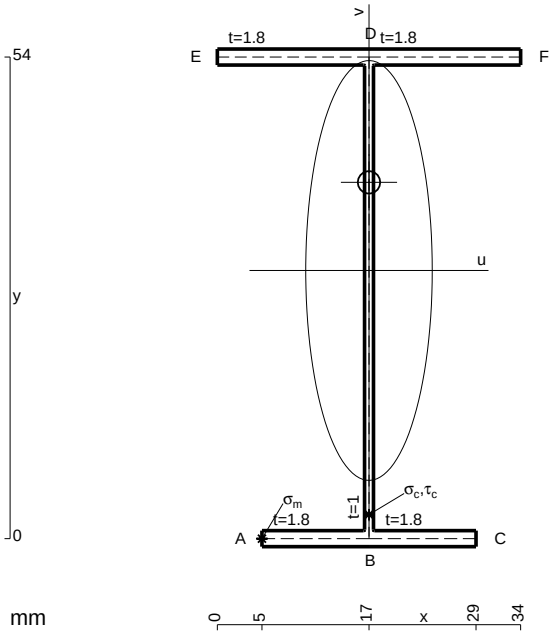

A = 158.4 mm^2
J_u = 87739. mm^4
J_v = 7969. mm^4
J_t = 130.8 mm^4
y_o = 9.881 mm
y_g = 30.07 mm
N = 425. N
T_y = -850. N
M_x = -620500. Nmm
x_m = 5. mm
u_m = -12. mm
v_m = -30.07 mm
$\sigma_m = N/A - Mv/J_u$ = -210. N/mm^2
x_c = 17. mm
v_c = -30.07 mm
$\sigma_c = N/A - Mv/J_u$ = -210. N/mm^2
$\tau_c = TS^*/tJ_u$ = 12.58 N/mm^2
$\tau_g = TS^*/tJ_u$ = 12.58 N/mm^2
t_c = 850. mm
$\sigma_o = \sqrt{\sigma^2 + 3\tau^2}$ = 211.1 N/mm^2

ESΣ05.xxxx.146

@ Adolfo Zavelani Rossi, Politecnico di Milano, vers.27.03.13 01.12.25

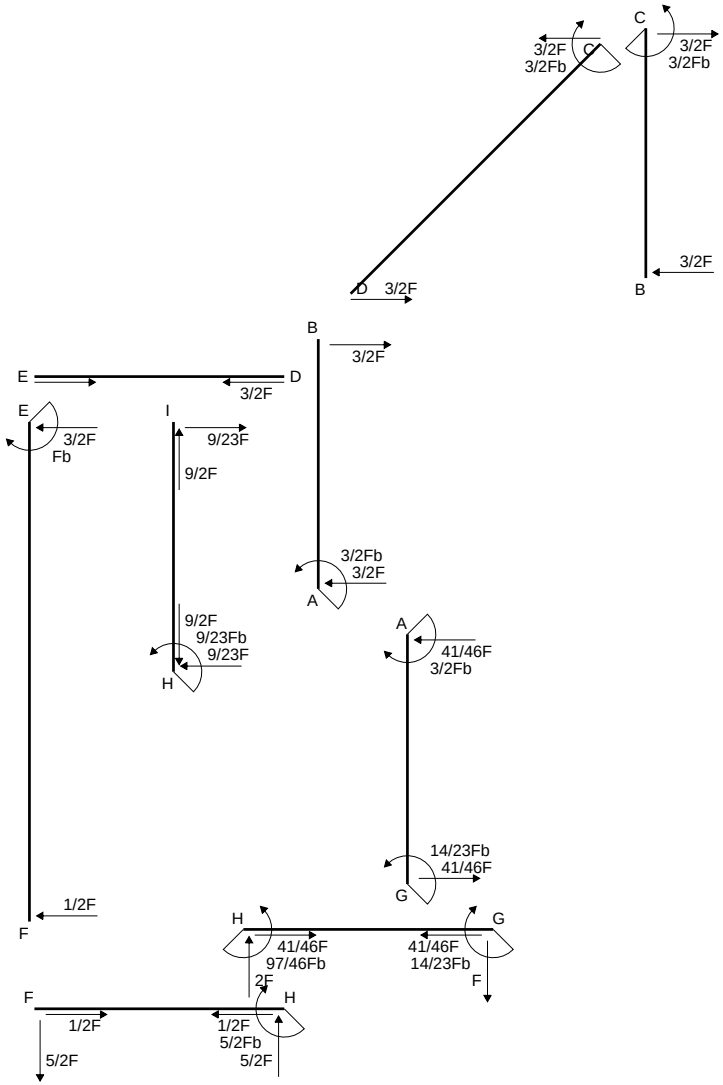
C
3/2F
3/2Fb
C
3/2F
3/2Fb
3/2F
D 3/2F
B
B
3/2F
E
D
3/2F
E
3/2F
Fb
I
9/23F
9/2F
3/2Fb
3/2F
A
9/2F
9/23Fb
9/23F
H
A
41/46F
3/2Fb
14/23Fb
41/46F
G
1/2F
F
H
G
41/46F
97/46Fb
2F
41/46F
14/23Fb
F
F
H
1/2F
1/2F
5/2Fb
5/2F
5/2F

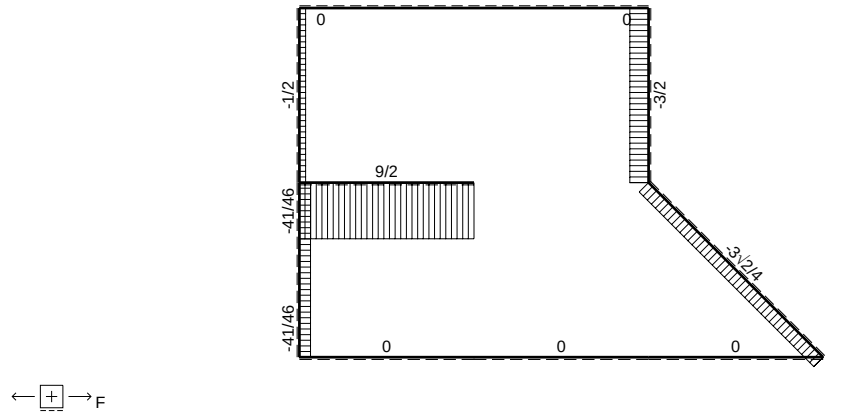
0
0
-1/2
-3/2
9/2
-41/46
-3√2/4
-41/46
0
0
0
F

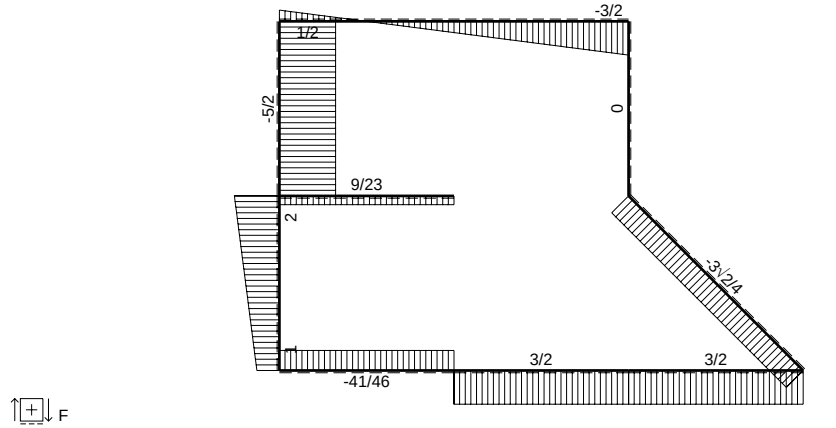
-3/2
1/2
-5/2
0
9/23
2
-3√2/4
1
3/2
3/2
-41/46
F

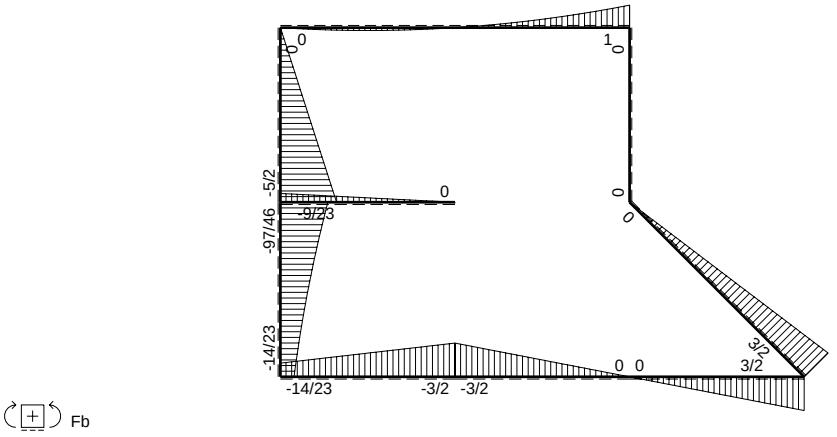
0
1
0
0
-5/2
0
-9/23
-97/46
0
0
0
-14/23
3/2
0 0
3/2
-14/23
-3/2 -3/2
Fb

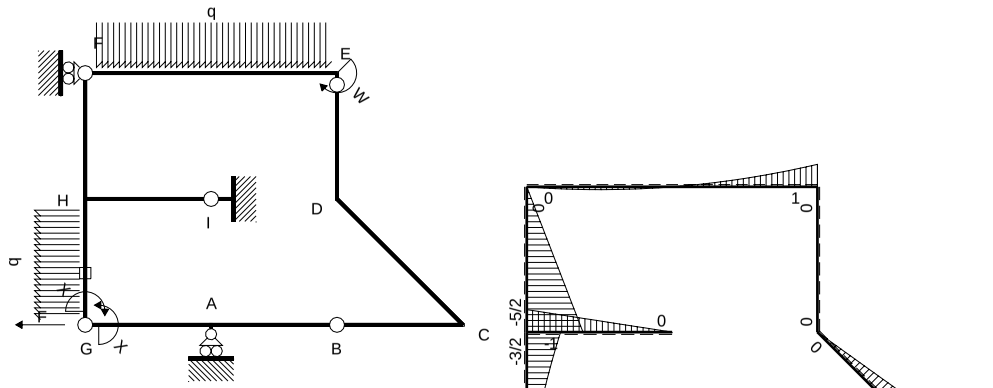

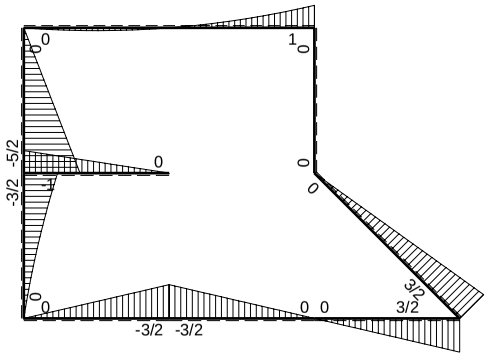

M_0 flessione da carichi assegnati

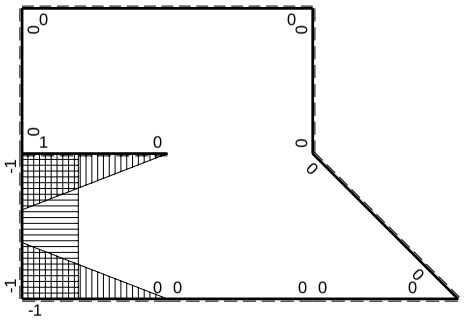

M_x flessione da iperstatica X=1

Quadro contributi PLV per iperstatica $X=W_{GA}$

→	$M_x(x)$	$M_0(x)$	M_xM_0	M_xM_x	$\int M_xM_0/EJdx$	$\int XM_xM_x/EJdx$
AB b	0	-3/2Fb+3/2Fx	0	0	0	0
BA b	0	3/2Fx	0	0		
BC b	0	3/2Fx	0	0	0	0
CB b	0	-3/2Fb+3/2Fx	0	0		
CD √2b	0	3/2Fb-3√2/4Fx	0	0	0	0
DE b	0	0	0	0	0	0
ED b	0	0	0	0		
EF 2b	0	$Fb-3/2Fx+1/2qx^2$	0	0	0	0
FE 2b	0	$1/2Fx-1/2qx^2$	0	0		
GA b	-1+x/b	-3/2Fx	$3/2Fx-3/2Fx^2/b$	$1-2x/b+x^2/b^2$	$1/4Fb^2/EJ$	1/3Xb/EJ
AG b	x/b	3/2Fb-3/2Fx	$3/2Fx-3/2Fx^2/b$	x^2/b^2		
FH b	0	-5/2Fx	0	0	0	0
HF b	0	5/2Fb-5/2Fx	0	0		
HI b	1-x/b	-Fb+Fx	$-Fb+2Fx-Fx^2/b$	$1-2x/b+x^2/b^2$	$-1/3Fb^2/EJ$	1/3Xb/EJ
IH b	-x/b	Fx	$-Fx^2/b$	x^2/b^2		
HG b	-1	$-3/2Fb+2Fx-1/2qx^2$	$3/2Fb-2Fx+1/2Fx^2/b$	1	$2/3Fb^2/EJ$	Xb/EJ
GH b	1	$Fx+1/2qx^2$	$Fx+1/2Fx^2/b$	1		
HG	elongazione asta $N_{1HG}\varepsilon_{HG}L_{HG}$				$-Fb^2/EJ$	
A	molla nodo $-V_{1A}(V_{0A}+XV_{1A})/k_A$				$-3/4Fb^2/EJ$	1/4Xb/EJ
	totali				$-7/6Fb^2/EJ$	23/12Xb/EJ
	iperstatica $X=W_{GA}$				14/23Fb	

Sviluppi di calcolo iperstatica

$L^{XX}_{GA} = \int_o^b (1 - 2\,x/b + x^2/b^2)\ 1/EJ\ dx = [\,x - x^2/b + 1/3\,x^3/b^2\,]_o^b\ 1/EJ$

$= (\,b - b + 1/3\,b\,)\ 1/EJ\ = 1/3\ b/EJ$

$L^{XX}_{AG} = \int_o^b (\,x^2/b^2\,)\ 1/EJ\ dx = [1/3\,x^3/b^2\,]_o^b\ 1/EJ$

$= (1/3\,b\,)\ 1/EJ\ = 1/3\ b/EJ$

$L^{XX}_{HI} = \int_o^b (1 - 2\,x/b + x^2/b^2)\ 1/EJ\ dx = [\,x - x^2/b + 1/3\,x^3/b^2\,]_o^b\ 1/EJ$

$= (\,b - b + 1/3\,b\,)\ 1/EJ\ = 1/3\ b/EJ$

$L^{XX}_{IH} = \int_o^b (\,x^2/b^2\,)\ 1/EJ\ dx = [1/3\,x^3/b^2\,]_o^b\ 1/EJ$

$= (1/3\,b\,)\ 1/EJ\ = 1/3\ b/EJ$

$L^{XX}_{HG} = \int_o^b (1)\ 1/EJ\ dx = [\,x\,]_o^b\ 1/EJ$

$= (\,b\,)\ 1/EJ\ =\ b/EJ$

$L^{XX}_{GH} = \int_o^b (1)\ 1/EJ\ dx = [\,x\,]_o^b\ 1/EJ$

$= (\,b\,)\ 1/EJ\ =\ b/EJ$

$L^{Xo}_{GA} = \int_o^b (3/2\,x/b - 3/2\,x^2/b^2)\ Fb\ 1/EJ\ dx = [3/4\,x^2/b - 1/2\,x^3/b^2\,]_o^b\ Fb\ 1/EJ$

$= (3/4\,b - 1/2\,b\,)\ Fb\ 1/EJ\ = 1/4\ Fb^2/EJ$

$L^{Xo}_{AG} = \int_o^b (3/2\,x/b - 3/2\,x^2/b^2)\ Fb\ 1/EJ\ dx = [3/4\,x^2/b - 1/2\,x^3/b^2\,]_o^b\ Fb\ 1/EJ$

$= (3/4\,b - 1/2\,b\,)\ Fb\ 1/EJ\ = 1/4\ Fb^2/EJ$

$L^{Xo}_{HI} = \int_o^b (-1 + 2\,x/b - x^2/b^2)\ Fb\ 1/EJ\ dx = [-\,x + x^2/b - 1/3\,x^3/b^2\,]_o^b\ Fb\ 1/EJ$

$= (-\,b + b - 1/3\,b\,)\ Fb\ 1/EJ\ = -1/3\ Fb^2/EJ$

$L^{Xo}_{IH} = \int_o^b (-\,x^2/b^2\,)\ Fb\ 1/EJ\ dx = [-1/3\,x^3/b^2\,]_o^b\ Fb\ 1/EJ$

$= (-1/3\,b\,)\ Fb\ 1/EJ\ = -1/3\ Fb^2/EJ$

$L^{Xo}_{HG} = \int_o^b (3/2 - 2\,x/b + 1/2\,x^2/b^2)\ Fb\ 1/EJ\ dx - 1\ \ (-1)\ \ (-1)\ \ Fb^2/EJ$

$= [3/2\,x - x^2/b + 1/6\,x^3/b^2\,]_o^b\ Fb\ 1/EJ\ -\ 1\ \ (-1)\ \ (-1)\ \ Fb^2/EJ$

$= (3/2\,b - b + 1/6\,b\,)\ Fb\ 1/EJ\ -\ 1\ \ (-1)\ \ (-1)\ \ Fb^2/EJ = -1/3\ Fb^2/EJ$

$L^{Xo}_{GH} = \int_o^b (\,x/b + 1/2\,x^2/b^2\,)\ Fb\ 1/EJ\ dx - 1\ \ (-1)\ \ (-1)\ \ Fb^2/EJ$

$= [1/2\,x^2/b + 1/6\,x^3/b^2\,]_o^b\ Fb\ 1/EJ\ -\ 1\ \ (-1)\ \ (-1)\ \ Fb^2/EJ$

$= (1/2\,b + 1/6\,b\,)\ Fb\ 1/EJ\ -\ 1\ \ (-1)\ \ (-1)\ \ Fb^2/EJ = -1/3\ Fb^2/EJ$

PROCEDIMENTO E RISULTATI 212317 ESΣ05.xxxx.147

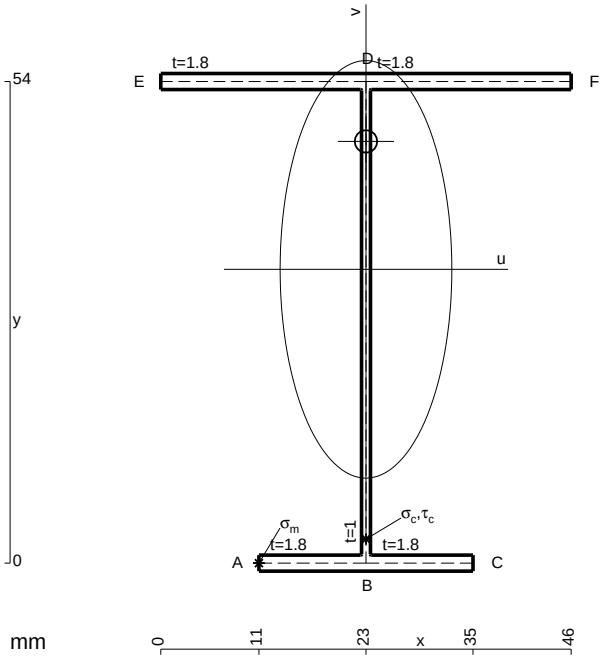

A = 180. mm^2
J_u = 98625. mm^4
J_v = 16674. mm^4
J_t = 154.1 mm^4
y_o = 14.34 mm
y_g = 32.94 mm
N = -165. N
T_y = -825. N
M_x = -643500. Nmm
x_m = 11. mm
u_m = -12. mm
v_m = -32.94 mm
$\sigma_m = N/A - Mv/J_u$ = -215.8 N/mm^2
x_c = 23. mm
v_c = -32.94 mm
$\sigma_c = N/A - Mv/J_u$ = -215.8 N/mm^2
$\tau_c = TS^*/tJ_u$ = 11.9 N/mm^2
$\tau_g = TS^*/tJ_u$ = 11.9 N/mm^2
t_c = 330. mm
$\sigma_o = \sqrt{\sigma^2 + 3\tau^2}$ = 216.8 N/mm^2

@ Adolfo Zavelani Rossi, Politecnico di Milano, vers.27.03.13 01.12.25

ESΣ05.xxxx.147

@ Adolfo Zavelani Rossi, Politecnico di Milano, vers.27.03.13 01.12.25

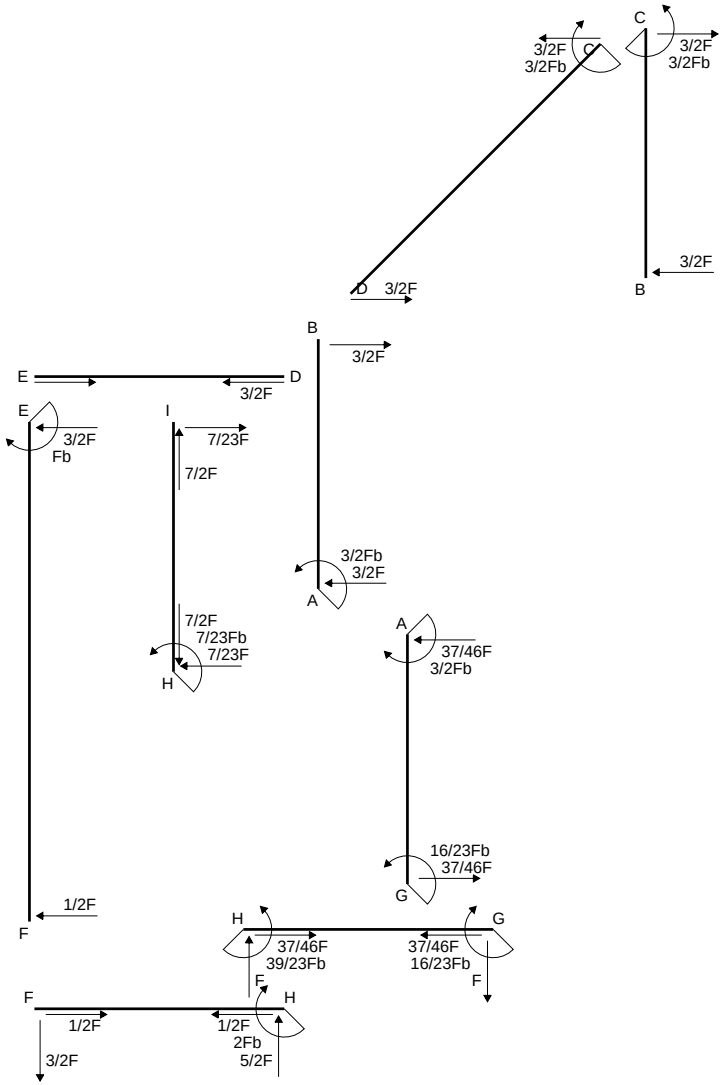
C
3/2F
3/2Fb
C
3/2F
3/2Fb
3/2F
D 3/2F
B
B
3/2F
E
D
3/2F
E
3/2F
Fb
I
7/23F
7/2F
3/2Fb
3/2F
A
7/2F
7/23Fb
7/23F
H
A
37/46F
3/2Fb
16/23Fb
37/46F
G
1/2F
F
H
G
37/46F
39/23Fb
37/46F
16/23Fb
F
F
H
F
1/2F
1/2F
2Fb
5/2F
3/2F

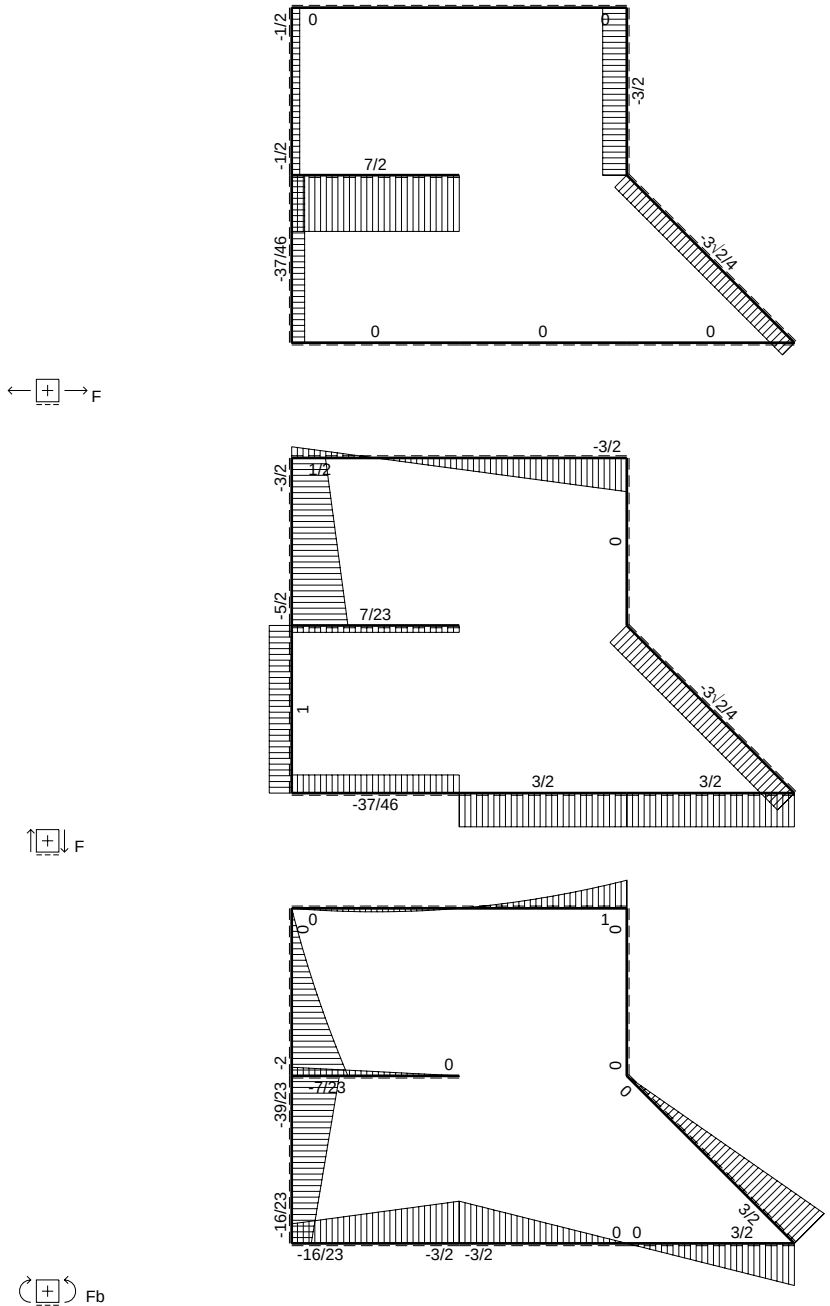
-1/2
0
0
-3/2
-1/2
7/2
-37/46
-3√2/4
0
0
0
F
-3/2
-3/2
1/2
0
-5/2
7/23
1
-3√2/4
3/2
3/2
-37/46
F
1
0
0
-2
0
-39/23
-7/23
0
0
-16/23
3/2
0 0
3/2
-16/23
-3/2 -3/2
Fb

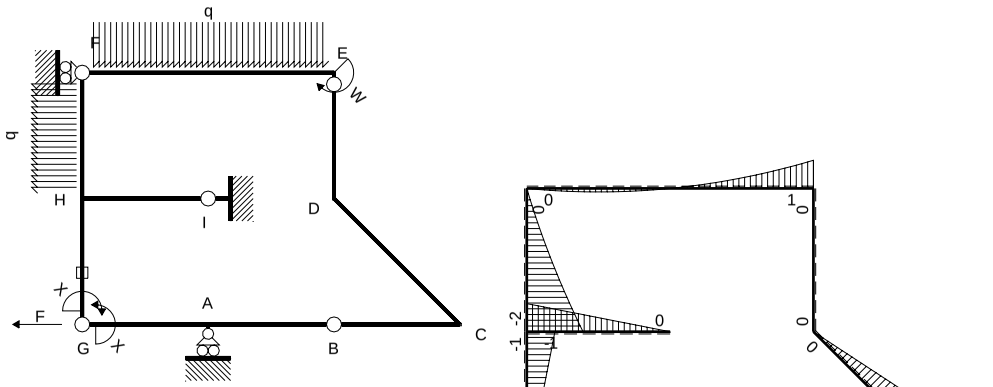

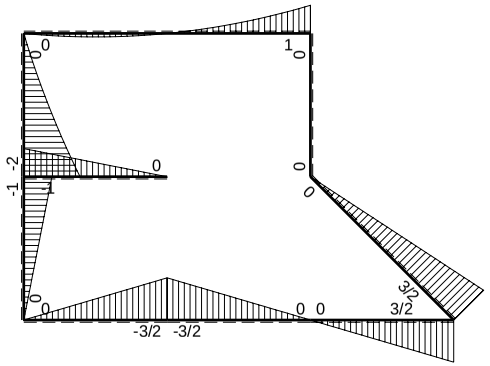

M_0 flessione da carichi assegnati

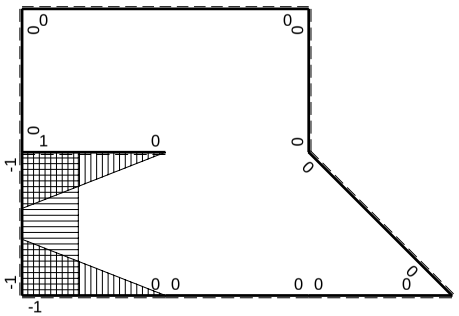

M_x flessione da iperstatica X=1

PROCEDIMENTO E RISULTATI 236719 ESΣ05.xxxx.148

Quadro contributi PLV per iperstatica $X=W_{GA}$

→	$M_x(x)$	$M_o(x)$	M_xM_o	M_xM_x	$\int M_xM_o/EJdx$	$\int XM_xM_x/EJdx$
AB b	0	$-3/2Fb+3/2Fx$	0	0	0	0
BA b	0	$3/2Fx$	0	0		
BC b	0	$3/2Fx$	0	0	0	0
CB b	0	$-3/2Fb+3/2Fx$	0	0		
CD $\sqrt{2}b$	0	$3/2Fb-3\sqrt{2}/4Fx$	0	0	0	0
DE b	0	0	0	0	0	0
ED b	0	0	0	0		
EF 2b	0	$Fb-3/2Fx+1/2qx^2$	0	0	0	0
FE 2b	0	$1/2Fx-1/2qx^2$	0	0		
GA b	$-1+x/b$	$-3/2Fx$	$3/2Fx-3/2Fx^2/b$	$1-2x/b+x^2/b^2$	$1/4Fb^2/EJ$	$1/3Xb/EJ$
AG b	x/b	$3/2Fb-3/2Fx$	$3/2Fx-3/2Fx^2/b$	x^2/b^2		
FH b	0	$-3/2Fx-1/2qx^2$	0	0	0	0
HF b	0	$2Fb-5/2Fx+1/2qx^2$	0	0		
HI b	$1-x/b$	$-Fb+Fx$	$-Fb+2Fx-Fx^2/b$	$1-2x/b+x^2/b^2$	$-1/3Fb^2/EJ$	$1/3Xb/EJ$
IH b	$-x/b$	Fx	$-Fx^2/b$	x^2/b^2		
HG b	-1	$-Fb+Fx$	$Fb-Fx$	1	$1/2Fb^2/EJ$	Xb/EJ
GH b	1	Fx	Fx	1		
HG	elongazione asta $N_{1HG}\varepsilon_{HG}L_{HG}$				$-Fb^2/EJ$	
A	molla nodo $-V_{1A}(V_{0A}+XV_{1A})/k_A$				$-3/4Fb^2/EJ$	$1/4Xb/EJ$
	totali				$-4/3Fb^2/EJ$	$23/12Xb/EJ$
	iperstatica $X=W_{GA}$				16/23Fb	

Sviluppi di calcolo iperstatica

@ Adolfo Zavelani Rossi, Politecnico di Milano, vers.27.03.13 01.12.25

$L^{XX}_{GA} = \int_o^b (1 - 2\,x/b + x^2/b^2)\ 1/EJ\ dx = [\ x - x^2/b + 1/3\ x^3/b^2\ ]_o^b\ 1/EJ$

$= (\ b - b + 1/3\ b\ )\ 1/EJ\ = 1/3\ b/EJ$

$L^{XX}_{AG} = \int_o^b (\ x^2/b^2\ )\ 1/EJ\ dx = [1/3\ x^3/b^2\ ]_o^b\ 1/EJ$

$= (1/3\ b\ )\ 1/EJ\ = 1/3\ b/EJ$

$L^{XX}_{HI} = \int_o^b (1 - 2\,x/b + x^2/b^2)\ 1/EJ\ dx = [\ x - x^2/b + 1/3\ x^3/b^2\ ]_o^b\ 1/EJ$

$= (\ b - b + 1/3\ b\ )\ 1/EJ\ = 1/3\ b/EJ$

$L^{XX}_{IH} = \int_o^b (\ x^2/b^2\ )\ 1/EJ\ dx = [1/3\ x^3/b^2\ ]_o^b\ 1/EJ$

$= (1/3\ b\ )\ 1/EJ\ = 1/3\ b/EJ$

$L^{XX}_{HG} = \int_o^b (1\ )\ 1/EJ\ dx = [\ x\ ]_o^b\ 1/EJ$

$= (\ b\ )\ 1/EJ\ =\ b/EJ$

$L^{XX}_{GH} = \int_o^b (1\ )\ 1/EJ\ dx = [\ x\ ]_o^b\ 1/EJ$

$= (\ b\ )\ 1/EJ\ =\ b/EJ$

$L^{Xo}_{GA} = \int_o^b (3/2\ x/b - 3/2\ x^2/b^2\ )\ Fb\ 1/EJ\ dx = [3/4\ x^2/b - 1/2\ x^3/b^2\ ]_o^b\ Fb\ 1/EJ$

$= (3/4\ b - 1/2\ b\ )\ Fb\ 1/EJ\ = 1/4\ \ Fb^2/EJ$

$L^{Xo}_{AG} = \int_o^b (3/2\ x/b - 3/2\ x^2/b^2\ )\ Fb\ 1/EJ\ dx = [3/4\ x^2/b - 1/2\ x^3/b^2\ ]_o^b\ Fb\ 1/EJ$

$= (3/4\ b - 1/2\ b\ )\ Fb\ 1/EJ\ = 1/4\ \ Fb^2/EJ$

$L^{Xo}_{HI} = \int_o^b (-1 + 2\,x/b - x^2/b^2\ )\ Fb\ 1/EJ\ dx = [-\ x + x^2/b - 1/3\ x^3/b^2\ ]_o^b\ Fb\ 1/EJ$

$= (-\ b + b - 1/3\ b\ )\ Fb\ 1/EJ\ = -1/3\ \ Fb^2/EJ$

$L^{Xo}_{IH} = \int_o^b (-\ x^2/b^2\ )\ Fb\ 1/EJ\ dx = [-1/3\ x^3/b^2\ ]_o^b\ Fb\ 1/EJ$

$= (-1/3\ b\ )\ Fb\ 1/EJ\ = -1/3\ \ Fb^2/EJ$

$L^{Xo}_{HG} = \int_o^b (1 - x/b\ )\ Fb\ 1/EJ\ dx - 1\ \ (-1)\ \ (-1)\ \ Fb^2/EJ = [\ x - 1/2\ x^2/b\ ]_o^b\ Fb\ 1/EJ\ \ - 1\ \ (-1)\ \ (-1)\ \ Fb^2/EJ$

$= (\ b - 1/2\ b\ )\ Fb\ 1/EJ\ \ - 1\ \ (-1)\ \ (-1)\ \ Fb^2/EJ = -1/2\ \ Fb^2/EJ$

$L^{Xo}_{GH} = \int_o^b (\ x/b\ )\ Fb\ 1/EJ\ dx - 1\ \ (-1)\ \ (-1)\ \ Fb^2/EJ = [1/2\ x^2/b\ ]_o^b\ Fb\ 1/EJ\ \ - 1\ \ (-1)\ \ (-1)\ \ Fb^2/EJ$

$= (1/2\ b\ )\ Fb\ 1/EJ\ \ - 1\ \ (-1)\ \ (-1)\ \ Fb^2/EJ = -1/2\ \ Fb^2/EJ$

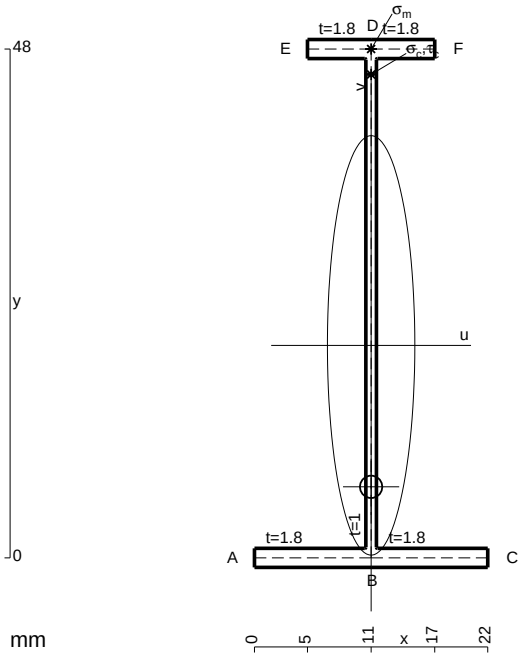

A = 109.2 mm^2
J_u = 42758. mm^4
J_v = 1856. mm^4
J_t = 82.1 mm^4
y_o = -13.34 mm
y_g = 20.04 mm
N = -120. N
T_y = -600. N
M_x = -350400. Nmm
x_m = 11. mm
y_m = 48. mm
v_m = 27.96 mm
$\sigma_m = N/A - Mv/J_u$ = 228. N/mm^2
y_c = 2. mm
u_c = -11. mm
v_c = -18.04 mm
$\sigma_c = N/A - Mv/J_u$ = 228. N/mm^2
$\tau_c = TS^*/tJ_u$ = 8.473 N/mm^2
$\tau_g = TS^*/tJ_u$ = 8.473 N/mm^2
t_c = 240. mm
$\sigma_o = \sqrt{\sigma^2 + 3\tau^2}$ = 228.5 N/mm^2

ESΣ05.xxxx.148

@ Adolfo Zavelani Rossi, Politecnico di Milano, vers.27.03.13 01.12.25

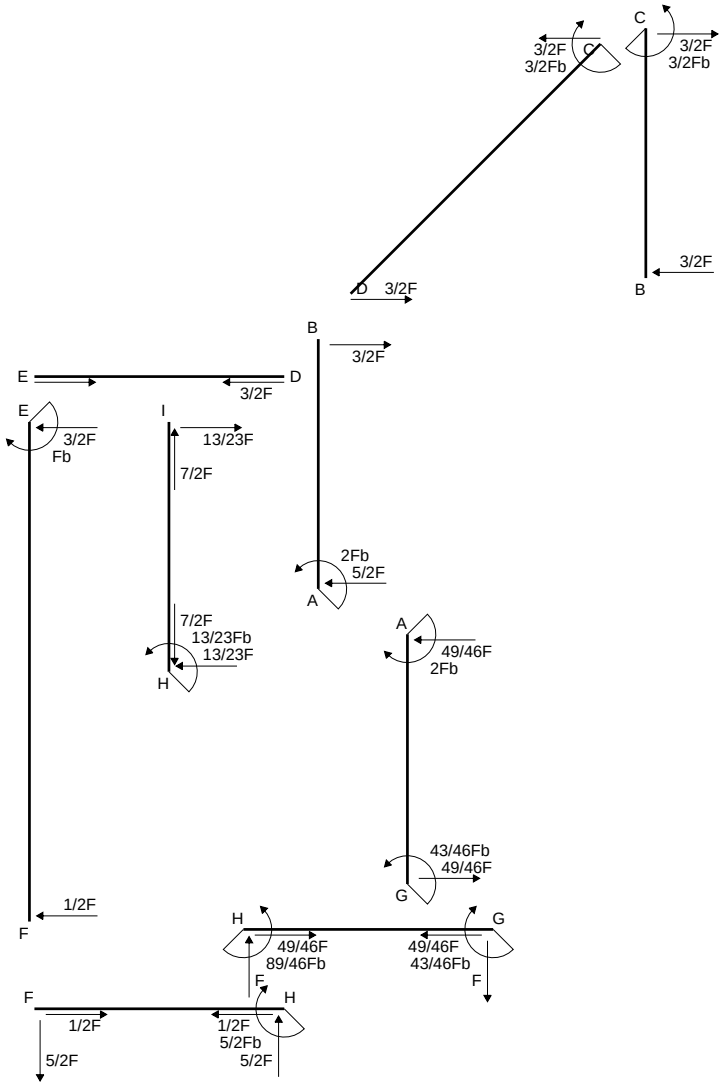
C
3/2F
3/2Fb
C
3/2F
3/2Fb
3/2F
D 3/2F
B
B
3/2F
E
D
3/2F
E
3/2F
Fb
I
13/23F
7/2F
2Fb
5/2F
A
7/2F
13/23Fb
13/23F
H
A
49/46F
2Fb
43/46Fb
49/46F
G
1/2F
F
H
G
49/46F
89/46Fb
49/46F
43/46Fb
F
F
H
F
1/2F
1/2F
5/2Fb
5/2F
5/2F

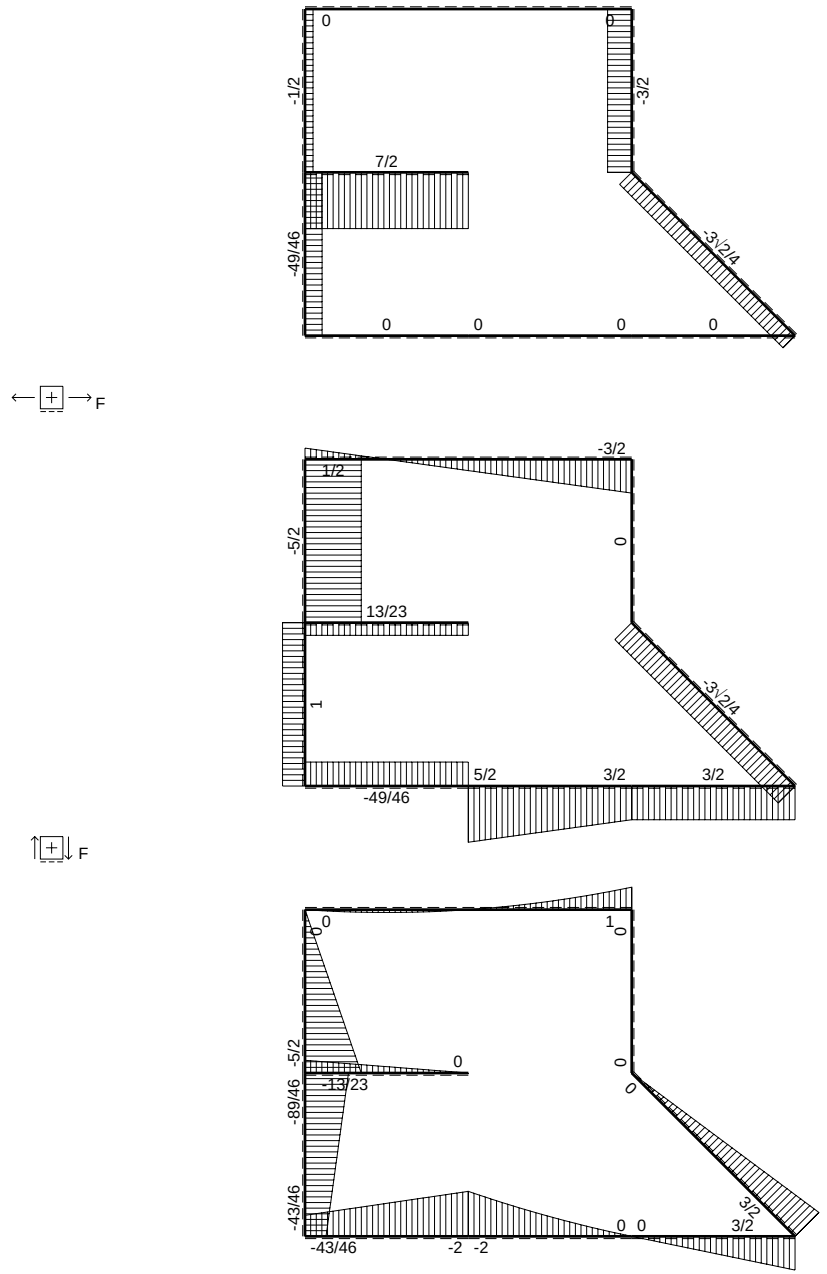
0
0
-1/2
-3/2
7/2
-49/46
-3√2/4
0
0
0
0
F
-3/2
1/2
-5/2
0
13/23
1
-3√2/4
5/2
3/2
3/2
-49/46
F
0
1
0
0
-5/2
0
-13/23
-89/46
0
0
-43/46
3/2
0 0
3/2
-43/46
-2 -2
Fb

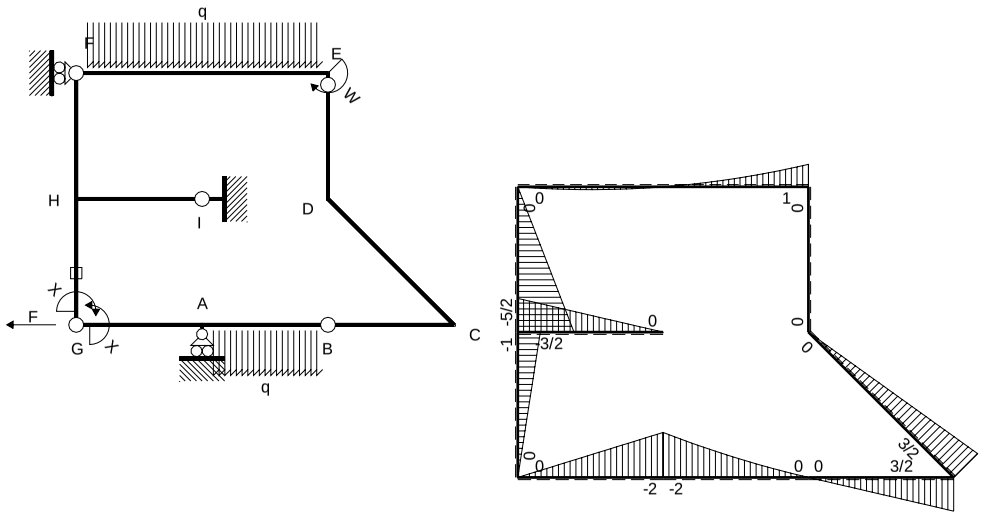

M_0 flessione da carichi assegnati

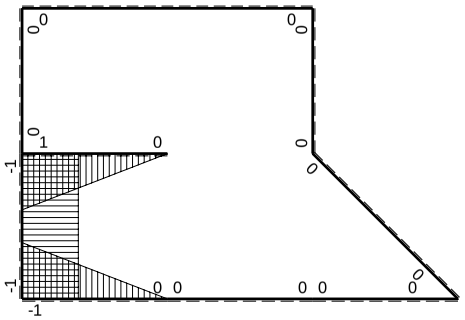

M_x flessione da iperstatica X=1

Quadro contributi PLV per iperstatica $X=W_{GA}$

→	$M_x(x)$	$M_0(x)$	M_xM_0	M_xM_x	$\int M_xM_0/EJdx$	$\int XM_xM_x/EJdx$
AB b	0	$-2Fb+5/2Fx-1/2qx^2$	0	0	0	0
BA b	0	$3/2Fx+1/2qx^2$	0	0		
BC b	0	3/2Fx	0	0	0	0
CB b	0	$-3/2Fb+3/2Fx$	0	0		
CD √2b	0	$3/2Fb-3\sqrt{2}/4Fx$	0	0	0	0
DE b	0	0	0	0	0	0
ED b	0	0	0	0		
EF 2b	0	$Fb-3/2Fx+1/2qx^2$	0	0	0	0
FE 2b	0	$1/2Fx-1/2qx^2$	0	0		
GA b	$-1+x/b$	$-2Fx$	$2Fx-2Fx^2/b$	$1-2x/b+x^2/b^2$	$1/3Fb^2/EJ$	1/3Xb/EJ
AG b	x/b	$2Fb-2Fx$	$2Fx-2Fx^2/b$	x^2/b^2		
FH b	0	-5/2Fx	0	0	0	0
HF b	0	5/2Fb-5/2Fx	0	0		
HI b	1-x/b	$-3/2Fb+3/2Fx$	$-3/2Fb+3Fx-3/2Fx^2/b$	$1-2x/b+x^2/b^2$	$-1/2Fb^2/EJ$	1/3Xb/EJ
IH b	-x/b	$3/2Fx$	$-3/2Fx^2/b$	x^2/b^2		
HG b	-1	$-Fb+Fx$	$Fb-Fx$	1	$1/2Fb^2/EJ$	Xb/EJ
GH b	1	Fx	Fx	1		
HG	elongazione asta $N_{1HG}\varepsilon_{HG}L_{HG}$				$-Fb^2/EJ$	
A	molla nodo $-V_{1A}(V_{0A}+XV_{1A})/k_A$				$-9/8Fb^2/EJ$	1/4Xb/EJ
	totali				$-43/24Fb^2/EJ$	23/12Xb/EJ
	iperstatica $X=W_{GA}$				43/46Fb	

Sviluppi di calcolo iperstatica

$L^{XX}_{GA} = \int_o^b (1 - 2\,x/b + x^2/b^2)\ 1/EJ\ dx = [\ x - x^2/b + 1/3\ x^3/b^2\ ]_o^b\ 1/EJ$

$= (\ b - b + 1/3\ b\ )\ 1/EJ\ = 1/3\ b/EJ$

$L^{XX}_{AG} = \int_o^b (\ x^2/b^2\ )\ 1/EJ\ dx = [1/3\ x^3/b^2\ ]_o^b\ 1/EJ$

$= (1/3\ b\ )\ 1/EJ\ = 1/3\ b/EJ$

$L^{XX}_{HI} = \int_o^b (1 - 2\,x/b + x^2/b^2)\ 1/EJ\ dx = [\ x - x^2/b + 1/3\ x^3/b^2\ ]_o^b\ 1/EJ$

$= (\ b - b + 1/3\ b\ )\ 1/EJ\ = 1/3\ b/EJ$

$L^{XX}_{IH} = \int_o^b (\ x^2/b^2\ )\ 1/EJ\ dx = [1/3\ x^3/b^2\ ]_o^b\ 1/EJ$

$= (1/3\ b\ )\ 1/EJ\ = 1/3\ b/EJ$

$L^{XX}_{HG} = \int_o^b (1\ )\ 1/EJ\ dx = [\ x\ ]_o^b\ 1/EJ$

$= (\ b\ )\ 1/EJ\ =\ b/EJ$

$L^{XX}_{GH} = \int_o^b (1\ )\ 1/EJ\ dx = [\ x\ ]_o^b\ 1/EJ$

$= (\ b\ )\ 1/EJ\ =\ b/EJ$

$L^{Xo}_{GA} = \int_o^b (2\,x/b - 2\,x^2/b^2\ )\ Fb\ 1/EJ\ dx = [\ x^2/b - 2/3\ x^3/b^2\ ]_o^b\ Fb\ 1/EJ$

$= (\ b - 2/3\ b\ )\ Fb\ 1/EJ\ = 1/3\ Fb^2/EJ$

$L^{Xo}_{AG} = \int_o^b (2\,x/b - 2\,x^2/b^2\ )\ Fb\ 1/EJ\ dx = [\ x^2/b - 2/3\ x^3/b^2\ ]_o^b\ Fb\ 1/EJ$

$= (\ b - 2/3\ b\ )\ Fb\ 1/EJ\ = 1/3\ Fb^2/EJ$

$L^{Xo}_{HI} = \int_o^b (-3/2 + 3\,x/b - 3/2\ x^2/b^2\ )\ Fb\ 1/EJ\ dx = [-3/2\ x + 3/2\ x^2/b - 1/2\ x^3/b^2\ ]_o^b\ Fb\ 1/EJ$

$= (-3/2\ b + 3/2\ b - 1/2\ b\ )\ Fb\ 1/EJ\ = -1/2\ Fb^2/EJ$

$L^{Xo}_{IH} = \int_o^b (-3/2\ x^2/b^2\ )\ Fb\ 1/EJ\ dx = [-1/2\ x^3/b^2\ ]_o^b\ Fb\ 1/EJ$

$= (-1/2\ b\ )\ Fb\ 1/EJ\ = -1/2\ Fb^2/EJ$

$L^{Xo}_{HG} = \int_o^b (1 - x/b\ )\ Fb\ 1/EJ\ dx - 1\ \ (-1)\ \ (-1)\ \ Fb^2/EJ = [\ x - 1/2\ x^2/b\ ]_o^b\ Fb\ 1/EJ\ \ - 1\ \ (-1)\ \ (-1)\ \ Fb^2/EJ$

$= (\ b - 1/2\ b\ )\ Fb\ 1/EJ\ \ - 1\ \ (-1)\ \ (-1)\ \ Fb^2/EJ = -1/2\ \ Fb^2/EJ$

$L^{Xo}_{GH} = \int_o^b (\ x/b\ )\ Fb\ 1/EJ\ dx - 1\ \ (-1)\ \ (-1)\ \ Fb^2/EJ = [1/2\ x^2/b\ ]_o^b\ Fb\ 1/EJ\ \ - 1\ \ (-1)\ \ (-1)\ \ Fb^2/EJ$

$= (1/2\ b\ )\ Fb\ 1/EJ\ \ - 1\ \ (-1)\ \ (-1)\ \ Fb^2/EJ = -1/2\ \ Fb^2/EJ$

PROCEDIMENTO E RISULTATI 237735 ESΣ05.xxxx.149

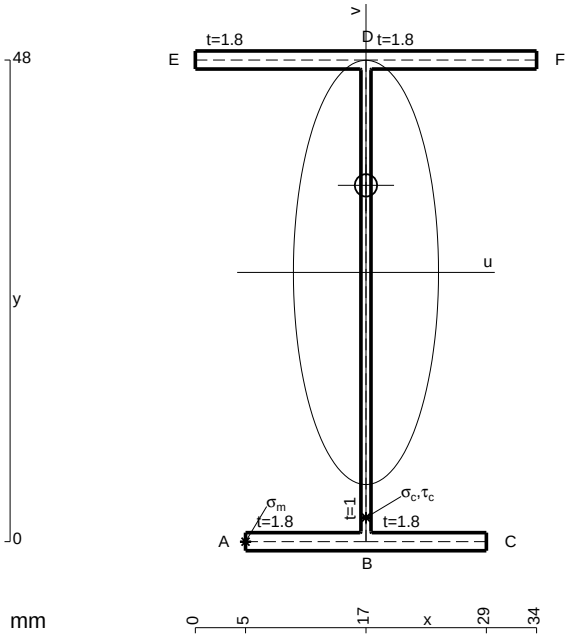

A = 152.4 mm^2
J_u = 68126. mm^4
J_v = 7969. mm^4
J_t = 128.8 mm^4
y_o = 8.676 mm
y_g = 26.83 mm
N = -155. N
T_y = -775. N
M_x = -596750. Nmm
x_m = 5. mm
u_m = -12. mm
v_m = -26.83 mm
$\sigma_m = N/A - Mv/J_u$ = -236.1 N/mm^2
x_c = 17. mm
v_c = -26.83 mm
$\sigma_c = N/A - Mv/J_u$ = -236.1 N/mm^2
$\tau_c = TS^*/tJ_u$ = 13.19 N/mm^2
$\tau_g = TS^*/tJ_u$ = 13.19 N/mm^2
t_c = 310. mm
$\sigma_o = \sqrt{\sigma^2 + 3\tau^2}$ = 237.2 N/mm^2

@ Adolfo Zavelani Rossi, Politecnico di Milano, vers.27.03.13 01.12.25

ESΣ05.xxxx.149

@ Adolfo Zavelani Rossi, Politecnico di Milano, vers.27.03.13 01.12.25

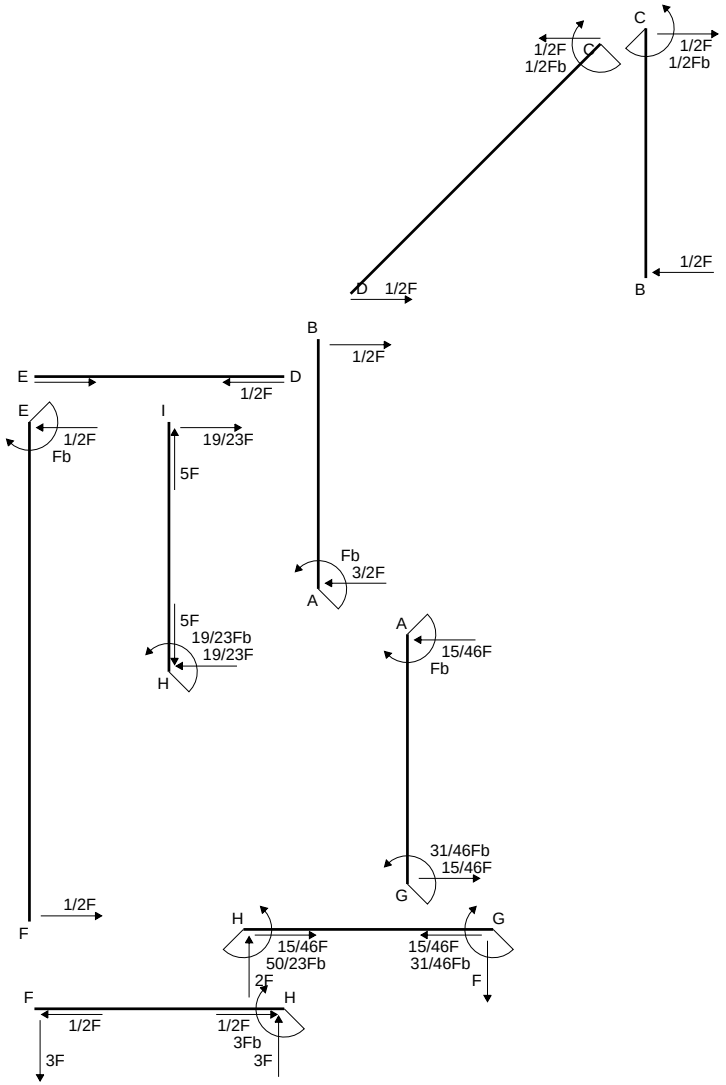
C
1/2F
1/2Fb
C
1/2F
1/2Fb
D 1/2F
B
1/2F
B
1/2F
E
D
1/2F
E
1/2F
Fb
I
19/23F
5F
Fb
3/2F
A
5F
19/23Fb
19/23F
H
A
15/46F
Fb
31/46Fb
15/46F
G
1/2F
F
H
G
15/46F
50/23Fb
15/46F
31/46Fb
2F
F
F
H
1/2F
1/2F
3Fb
3F
3F

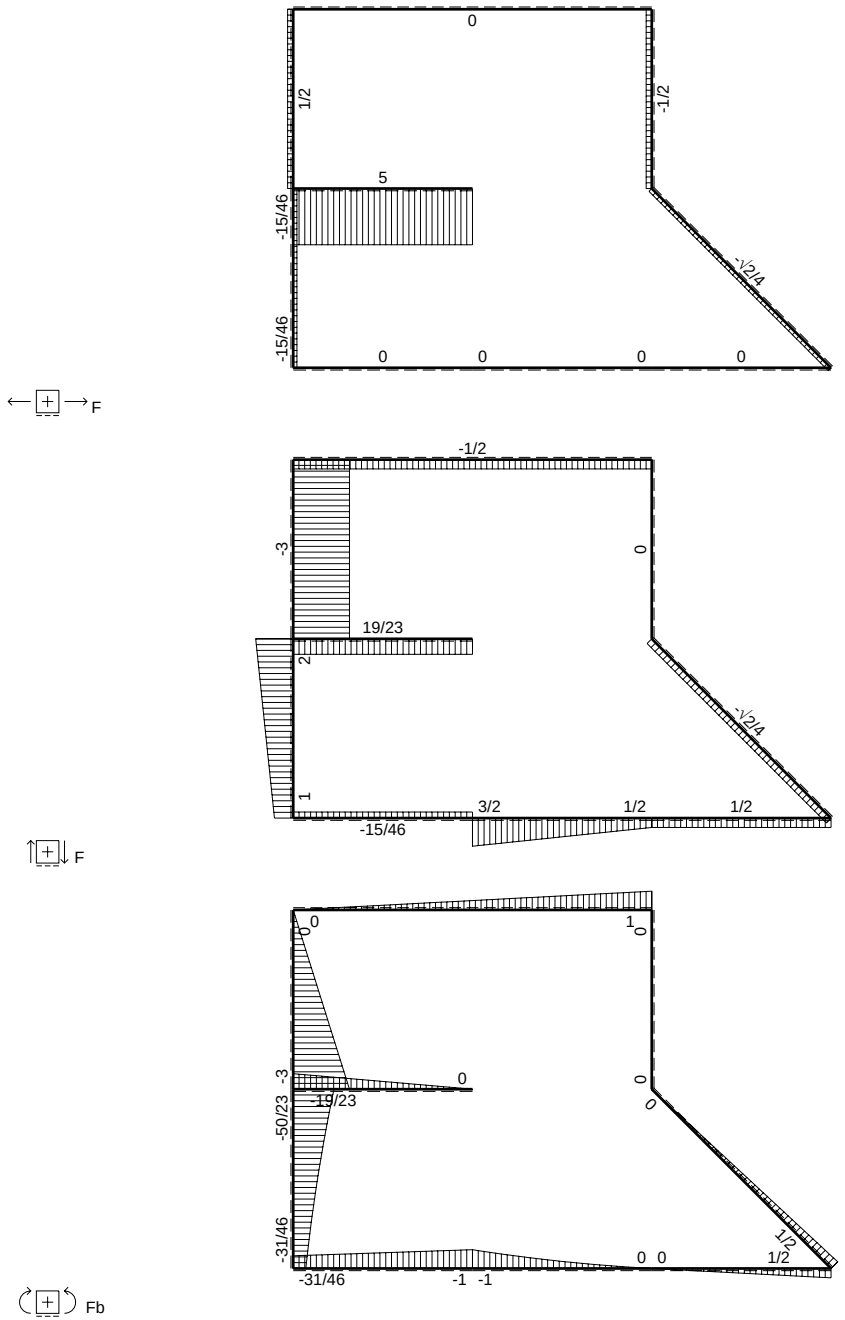
0
1/2
-1/2
5
-15/46
-√2/4
-15/46
0 0 0 0
F
-1/2
-3
0
19/23
2
-√2/4
1
3/2 1/2 1/2
-15/46
F
0 0
1 0
-3
0
0
-19/23
-50/23
-31/46
1/2
0 0
1/2
-31/46
-1 -1
Fb

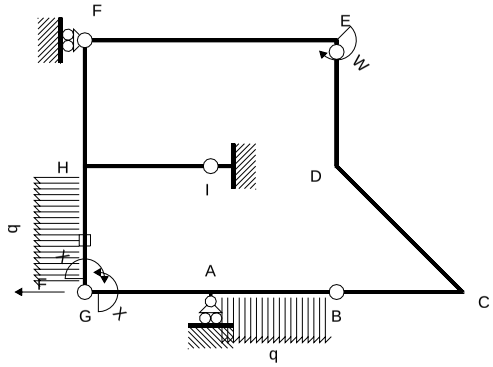

Schema di calcolo iperstatico

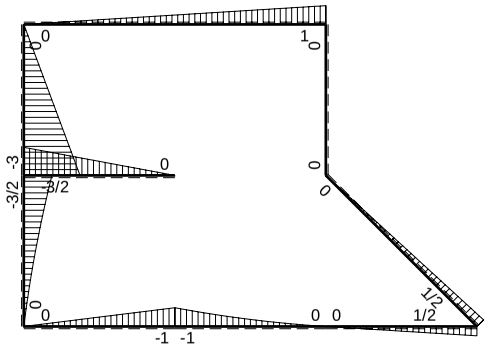

M_0 flessione da carichi assegnati

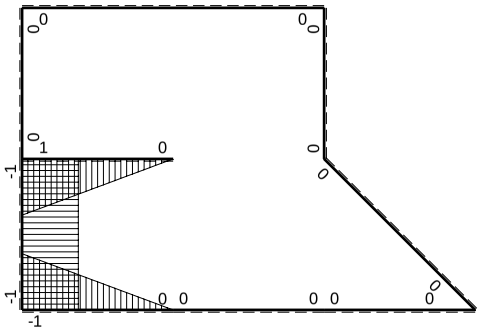

M_x flessione da iperstatica X=1

Quadro contributi PLV per iperstatica $X=W_{GA}$

→	$M_x(x)$	$M_0(x)$	M_xM_0	M_xM_x	$\int M_xM_0/EJdx$	$\int XM_xM_x/EJdx$
AB b	0	$-Fb+3/2Fx-1/2qx^2$	0	0	0	0
BA b	0	$1/2Fx+1/2qx^2$	0	0		
BC b	0	1/2Fx	0	0	0	0
CB b	0	-1/2Fb+1/2Fx	0	0		
CD √2b	0	1/2Fb-√2/4Fx	0	0	0	0
DE b	0	0	0	0	0	0
ED b	0	0	0	0		
EF 2b	0	Fb-1/2Fx	0	0	0	0
FE 2b	0	-1/2Fx	0	0		
GA b	-1+x/b	-Fx	$Fx-Fx^2/b$	$1-2x/b+x^2/b^2$	$1/6Fb^2/EJ$	1/3Xb/EJ
AG b	x/b	Fb-Fx	$Fx-Fx^2/b$	x^2/b^2		
FH b	0	-3Fx	0	0	0	0
HF b	0	3Fb-3Fx	0	0		
HI b	1-x/b	-3/2Fb+3/2Fx	$-3/2Fb+3Fx-3/2Fx^2/b$	$1-2x/b+x^2/b^2$	$-1/2Fb^2/EJ$	1/3Xb/EJ
IH b	-x/b	3/2Fx	$-3/2Fx^2/b$	x^2/b^2		
HG b	-1	$-3/2Fb+2Fx-1/2qx^2$	$3/2Fb-2Fx+1/2Fx^2/b$	1	$2/3Fb^2/EJ$	Xb/EJ
GH b	1	$Fx+1/2qx^2$	$Fx+1/2Fx^2/b$	1		
HG	elongazione asta $N_{1HG}\varepsilon_{HG}L_{HG}$				$-Fb^2/EJ$	
A	molla nodo $-V_{1A}(V_{0A}+XV_{1A})/k_A$				$-5/8Fb^2/EJ$	1/4Xb/EJ
	totali				$-31/24Fb^2/EJ$	23/12Xb/EJ
	iperstatica $X=W_{GA}$				31/46Fb	

Sviluppi di calcolo iperstatica

$L^{XX}_{GA} = \int_o^b (1 - 2\,x/b + x^2/b^2)\ 1/EJ\ dx = [\ x - x^2/b + 1/3\ x^3/b^2\ ]_o^b\ 1/EJ$

$= (\ b - b + 1/3\ b\ )\ 1/EJ\ = 1/3\ b/EJ$

$L^{XX}_{AG} = \int_o^b (\ x^2/b^2\ )\ 1/EJ\ dx = [1/3\ x^3/b^2\ ]_o^b\ 1/EJ$

$= (1/3\ b\ )\ 1/EJ\ = 1/3\ b/EJ$

$L^{XX}_{HI} = \int_o^b (1 - 2\,x/b + x^2/b^2)\ 1/EJ\ dx = [\ x - x^2/b + 1/3\ x^3/b^2\ ]_o^b\ 1/EJ$

$= (\ b - b + 1/3\ b\ )\ 1/EJ\ = 1/3\ b/EJ$

$L^{XX}_{IH} = \int_o^b (\ x^2/b^2\ )\ 1/EJ\ dx = [1/3\ x^3/b^2\ ]_o^b\ 1/EJ$

$= (1/3\ b\ )\ 1/EJ\ = 1/3\ b/EJ$

$L^{XX}_{HG} = \int_o^b (1\ )\ 1/EJ\ dx = [\ x\ ]_o^b\ 1/EJ$

$= (\ b\ )\ 1/EJ\ =\ b/EJ$

$L^{XX}_{GH} = \int_o^b (1\ )\ 1/EJ\ dx = [\ x\ ]_o^b\ 1/EJ$

$= (\ b\ )\ 1/EJ\ =\ b/EJ$

$L^{Xo}_{GA} = \int_o^b (\ x/b - x^2/b^2\ )\ Fb\ 1/EJ\ dx = [1/2\ x^2/b - 1/3\ x^3/b^2\ ]_o^b\ Fb\ 1/EJ$

$= (1/2\ b - 1/3\ b\ )\ Fb\ 1/EJ\ = 1/6\ \ Fb^2/EJ$

$L^{Xo}_{AG} = \int_o^b (\ x/b - x^2/b^2\ )\ Fb\ 1/EJ\ dx = [1/2\ x^2/b - 1/3\ x^3/b^2\ ]_o^b\ Fb\ 1/EJ$

$= (1/2\ b - 1/3\ b\ )\ Fb\ 1/EJ\ = 1/6\ \ Fb^2/EJ$

$L^{Xo}_{HI} = \int_o^b (-3/2 + 3\,x/b - 3/2\ x^2/b^2\ )\ Fb\ 1/EJ\ dx = [-3/2\ x + 3/2\ x^2/b - 1/2\ x^3/b^2\ ]_o^b\ Fb\ 1/EJ$

$= (-3/2\ b + 3/2\ b - 1/2\ b\ )\ Fb\ 1/EJ\ = -1/2\ \ Fb^2/EJ$

$L^{Xo}_{IH} = \int_o^b (-3/2\ x^2/b^2\ )\ Fb\ 1/EJ\ dx = [-1/2\ x^3/b^2\ ]_o^b\ Fb\ 1/EJ$

$= (-1/2\ b\ )\ Fb\ 1/EJ\ = -1/2\ \ Fb^2/EJ$

$L^{Xo}_{HG} = \int_o^b (3/2 - 2\,x/b + 1/2\ x^2/b^2\ )\ Fb\ 1/EJ\ dx - 1\ \ (-1)\ \ (-1)\ \ Fb^2/EJ$

$= [3/2\ x - x^2/b + 1/6\ x^3/b^2\ ]_o^b\ Fb\ 1/EJ\ - 1\ \ (-1)\ \ (-1)\ \ Fb^2/EJ$

$= (3/2\ b - b + 1/6\ b\ )\ Fb\ 1/EJ\ - 1\ \ (-1)\ \ (-1)\ \ Fb^2/EJ = -1/3\ \ Fb^2/EJ$

$L^{Xo}_{GH} = \int_o^b (\ x/b + 1/2\ x^2/b^2\ )\ Fb\ 1/EJ\ dx - 1\ \ (-1)\ \ (-1)\ \ Fb^2/EJ$

$= [1/2\ x^2/b + 1/6\ x^3/b^2\ ]_o^b\ Fb\ 1/EJ\ - 1\ \ (-1)\ \ (-1)\ \ Fb^2/EJ$

$= (1/2\ b + 1/6\ b\ )\ Fb\ 1/EJ\ - 1\ \ (-1)\ \ (-1)\ \ Fb^2/EJ = -1/3\ \ Fb^2/EJ$

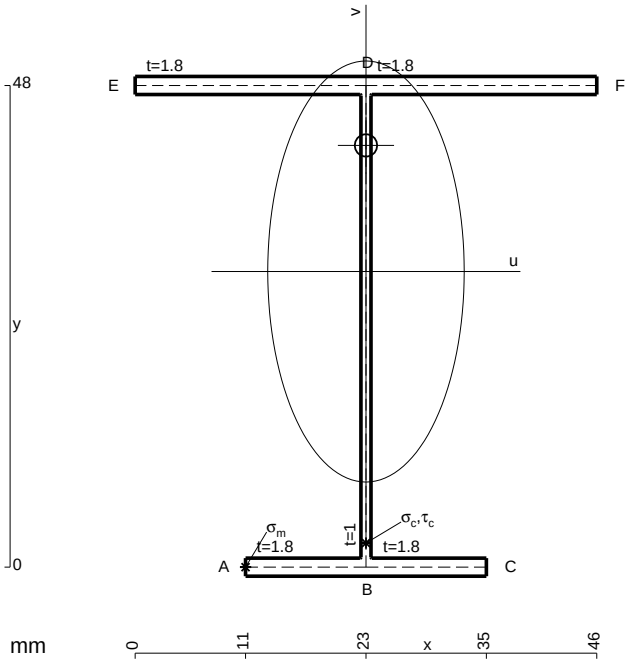

A = 174. mm^2
J_u = 76601. mm^4
J_v = 16674. mm^4
J_t = 152.1 mm^4
y_o = 12.57 mm
y_g = 29.46 mm
N = 210. N
T_y = -1260. N
M_x = -516600. Nmm
x_m = 11. mm
u_m = -12. mm
v_m = -29.46 mm
$\sigma_m = N/A - Mv/J_u$ = -197.5 N/mm^2
x_c = 23. mm
v_c = -29.46 mm
$\sigma_c = N/A - Mv/J_u$ = -197.5 N/mm^2
$\tau_c = TS^*/tJ_u$ = 20.94 N/mm^2
$\tau_g = TS^*/tJ_u$ = 20.94 N/mm^2
t_c = 420. mm
$\sigma_o = \sqrt{\sigma^2 + 3\tau^2}$ = 200.8 N/mm^2

ESΣ05.xxxx.150

@ Adolfo Zavelani Rossi, Politecnico di Milano, vers.27.03.13 01.12.25

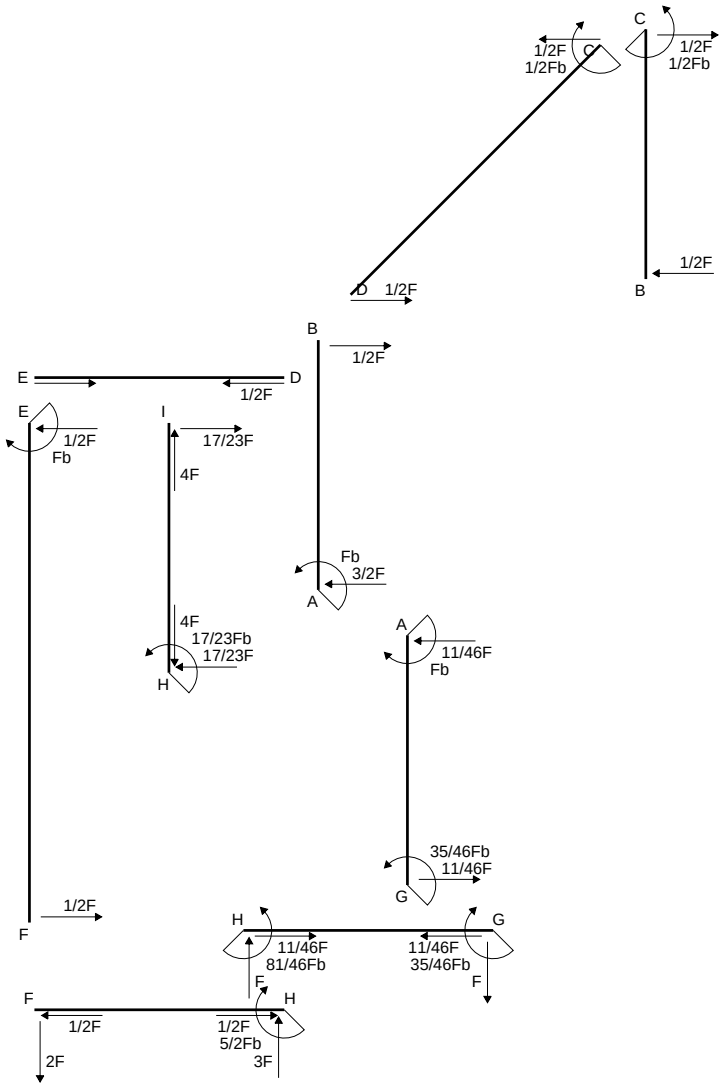
C
1/2F
1/2Fb
C
1/2F
1/2Fb
1/2F
D 1/2F
B
B
1/2F
E
D
1/2F
E
1/2F
Fb
I
17/23F
4F
Fb
3/2F
A
4F
17/23Fb
17/23F
H
A
11/46F
Fb
35/46Fb
11/46F
G
1/2F
F
H
G
11/46F
81/46Fb
11/46F
35/46Fb
F
F
H
F
1/2F
1/2F
5/2Fb
3F
2F

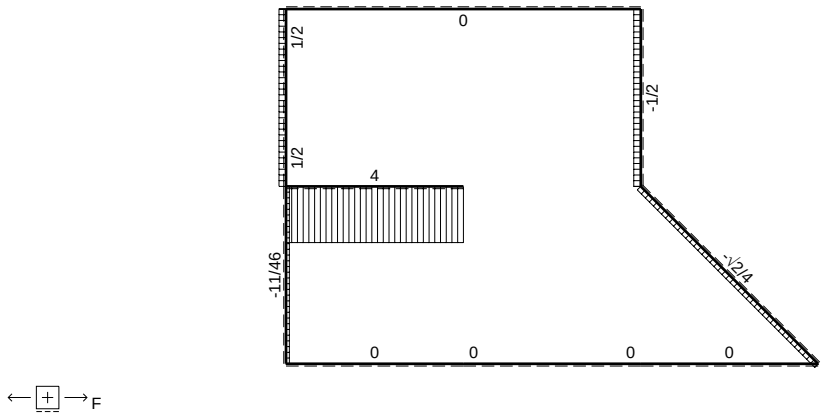
0
1/2
-1/2
1/2
4
-11/46
-1/2
0
0
0
0
F

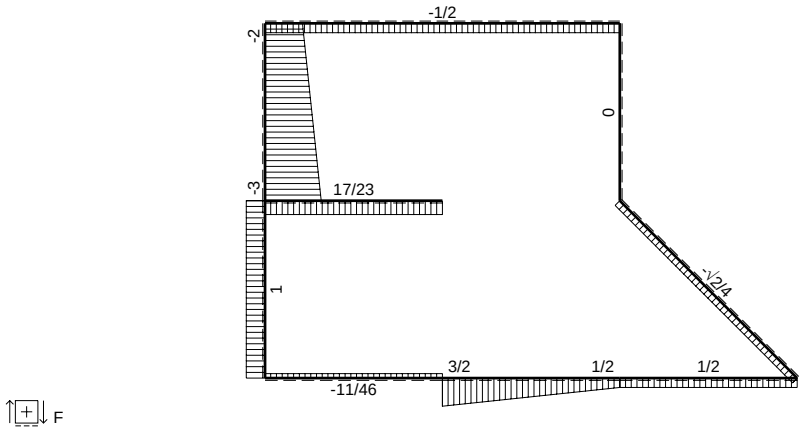
-1/2
-2
0
-3
17/23
1
-1/2
3/2
1/2
1/2
-11/46
F

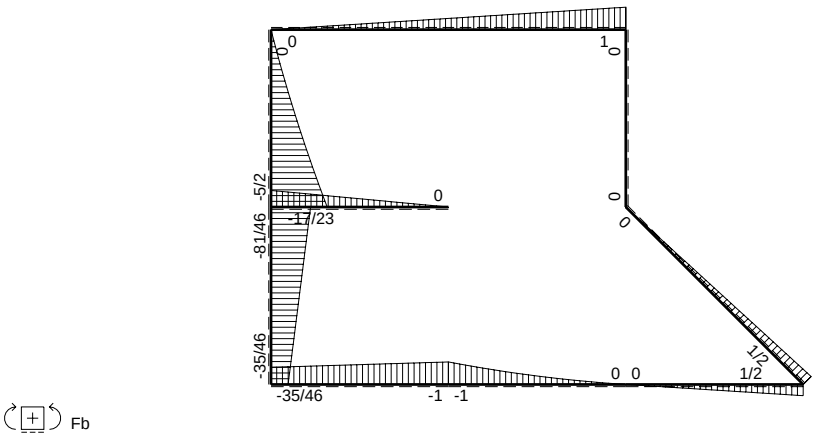
0
0
1
0
-5/2
0
-17/23
-81/46
0
0
0
-35/46
1/2
0 0
1/2
-35/46
-1 -1
Fb

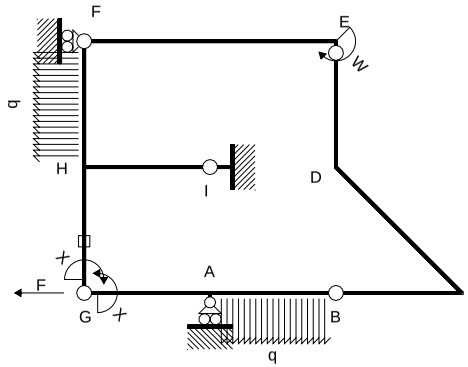

Schema di calcolo iperstatico

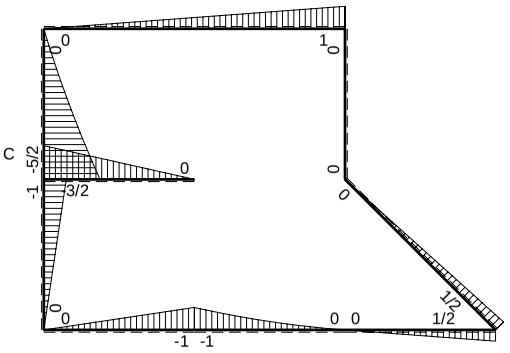

M_0 flessione da carichi assegnati

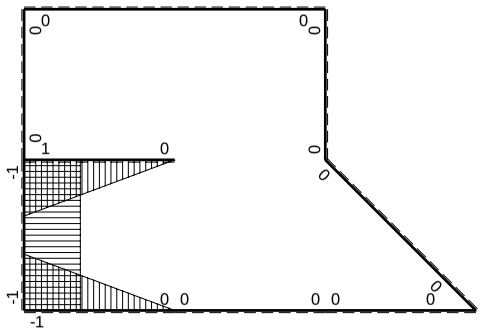

M_x flessione da iperstatica X=1

PROCEDIMENTO E RISULTATI 237895 ESΣ05.xxxx.151

Quadro contributi PLV per iperstatica $X=W_{GA}$

→	$M_x(x)$	$M_0(x)$	M_xM_0	M_xM_x	$\int M_xM_0/EJdx$	$\int XM_xM_x/EJdx$
AB b	0	$-Fb+3/2Fx-1/2qx^2$	0	0	0	0
BA b	0	$1/2Fx+1/2qx^2$	0	0		
BC b	0	1/2Fx	0	0	0	0
CB b	0	-1/2Fb+1/2Fx	0	0		
CD √2b	0	1/2Fb-√2/4Fx	0	0	0	0
DE b	0	0	0	0	0	0
ED b	0	0	0	0		
EF 2b	0	Fb-1/2Fx	0	0	0	0
FE 2b	0	-1/2Fx	0	0		
GA b	-1+x/b	-Fx	$Fx-Fx^2/b$	$1-2x/b+x^2/b^2$	$1/6Fb^2/EJ$	1/3Xb/EJ
AG b	x/b	Fb-Fx	$Fx-Fx^2/b$	x^2/b^2		
FH b	0	$-2Fx-1/2qx^2$	0	0	0	0
HF b	0	$5/2Fb-3Fx+1/2qx^2$	0	0		
HI b	1-x/b	-3/2Fb+3/2Fx	$-3/2Fb+3Fx-3/2Fx^2/b$	$1-2x/b+x^2/b^2$	$-1/2Fb^2/EJ$	1/3Xb/EJ
IH b	-x/b	3/2Fx	$-3/2Fx^2/b$	x^2/b^2		
HG b	-1	-Fb+Fx	Fb-Fx	1	$1/2Fb^2/EJ$	Xb/EJ
GH b	1	Fx	Fx	1		
HG	elongazione asta $N_{1HG}\varepsilon_{HG}L_{HG}$				$-Fb^2/EJ$	
A	molla nodo $-V_{1A}(V_{0A}+XV_{1A})/k_A$				$-5/8Fb^2/EJ$	1/4Xb/EJ
	totali				$-35/24Fb^2/EJ$	23/12Xb/EJ
	iperstatica $X=W_{GA}$				35/46Fb	

Sviluppi di calcolo iperstatica

@ Adolfo Zavelani Rossi, Politecnico di Milano, vers.27.03.13 01.12.25

$L^{XX}_{GA} = \int_o^b (1 - 2\,x/b + x^2/b^2)\ 1/EJ\ dx = [\,x - x^2/b + 1/3\,x^3/b^2\,]_o^b\ 1/EJ$

$= (\,b - b + 1/3\,b\,)\ 1/EJ = 1/3\ b/EJ$

$L^{XX}_{AG} = \int_o^b (\,x^2/b^2\,)\ 1/EJ\ dx = [1/3\,x^3/b^2\,]_o^b\ 1/EJ$

$= (1/3\,b)\ 1/EJ = 1/3\ b/EJ$

$L^{XX}_{HI} = \int_o^b (1 - 2\,x/b + x^2/b^2)\ 1/EJ\ dx = [\,x - x^2/b + 1/3\,x^3/b^2\,]_o^b\ 1/EJ$

$= (\,b - b + 1/3\,b\,)\ 1/EJ = 1/3\ b/EJ$

$L^{XX}_{IH} = \int_o^b (\,x^2/b^2\,)\ 1/EJ\ dx = [1/3\,x^3/b^2\,]_o^b\ 1/EJ$

$= (1/3\,b)\ 1/EJ = 1/3\ b/EJ$

$L^{XX}_{HG} = \int_o^b (1)\ 1/EJ\ dx = [\,x\,]_o^b\ 1/EJ$

$= (\,b\,)\ 1/EJ = b/EJ$

$L^{XX}_{GH} = \int_o^b (1)\ 1/EJ\ dx = [\,x\,]_o^b\ 1/EJ$

$= (\,b\,)\ 1/EJ = b/EJ$

$L^{Xo}_{GA} = \int_o^b (\,x/b - x^2/b^2\,)\ Fb\ 1/EJ\ dx = [1/2\,x^2/b - 1/3\,x^3/b^2\,]_o^b\ Fb\ 1/EJ$

$= (1/2\,b - 1/3\,b\,)\ Fb\ 1/EJ = 1/6\ Fb^2/EJ$

$L^{Xo}_{AG} = \int_o^b (\,x/b - x^2/b^2\,)\ Fb\ 1/EJ\ dx = [1/2\,x^2/b - 1/3\,x^3/b^2\,]_o^b\ Fb\ 1/EJ$

$= (1/2\,b - 1/3\,b\,)\ Fb\ 1/EJ = 1/6\ Fb^2/EJ$

$L^{Xo}_{HI} = \int_o^b (-3/2 + 3\,x/b - 3/2\,x^2/b^2\,)\ Fb\ 1/EJ\ dx = [-3/2\,x + 3/2\,x^2/b - 1/2\,x^3/b^2\,]_o^b\ Fb\ 1/EJ$

$= (-3/2\,b + 3/2\,b - 1/2\,b\,)\ Fb\ 1/EJ = -1/2\ Fb^2/EJ$

$L^{Xo}_{IH} = \int_o^b (-3/2\,x^2/b^2\,)\ Fb\ 1/EJ\ dx = [-1/2\,x^3/b^2\,]_o^b\ Fb\ 1/EJ$

$= (-1/2\,b\,)\ Fb\ 1/EJ = -1/2\ Fb^2/EJ$

$L^{Xo}_{HG} = \int_o^b (1 - x/b\,)\ Fb\ 1/EJ\ dx - 1\ \ (-1)\ \ (-1)\ \ Fb^2/EJ = [\,x - 1/2\,x^2/b\,]_o^b\ Fb\ 1/EJ\ \ - 1\ \ (-1)\ \ (-1)\ \ Fb^2/EJ$

$= (\,b - 1/2\,b\,)\ Fb\ 1/EJ\ \ - 1\ \ (-1)\ \ (-1)\ \ Fb^2/EJ = -1/2\ \ Fb^2/EJ$

$L^{Xo}_{GH} = \int_o^b (\,x/b\,)\ Fb\ 1/EJ\ dx - 1\ \ (-1)\ \ (-1)\ \ Fb^2/EJ = [1/2\,x^2/b\,]_o^b\ Fb\ 1/EJ\ \ - 1\ \ (-1)\ \ (-1)\ \ Fb^2/EJ$

$= (1/2\,b\,)\ Fb\ 1/EJ\ \ - 1\ \ (-1)\ \ (-1)\ \ Fb^2/EJ = -1/2\ \ Fb^2/EJ$

PROCEDIMENTO E RISULTATI 237895 ESΣ05.xxxx.151

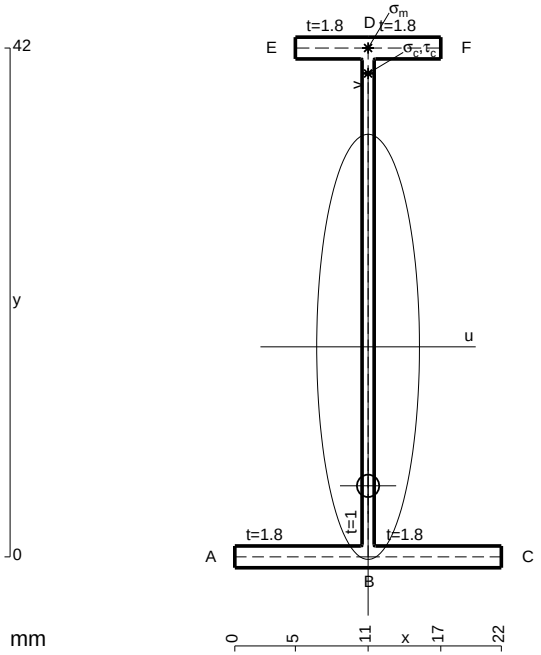

A = 103.2 mm^2
J_u = 31779. mm^4
J_v = 1856. mm^4
J_t = 80.1 mm^4
y_o = -11.47 mm
y_g = 17.34 mm
N = 135. N
T_y = -810. N
M_x = -263250. Nmm
x_m = 11. mm
y_m = 42. mm
v_m = 24.66 mm
$\sigma_m = N/A - Mv/J_u$ = 205.6 N/mm^2
y_c = 2. mm
u_c = -11. mm
v_c = -15.34 mm
$\sigma_c = N/A - Mv/J_u$ = 205.6 N/mm^2
$\tau_c = TS^*/tJ_u$ = 13.58 N/mm^2
$\tau_g = TS^*/tJ_u$ = 13.58 N/mm^2
t_c = 270. mm
$\sigma_o = \sqrt{\sigma^2 + 3\tau^2}$ = 207. N/mm^2

@ Adolfo Zavelani Rossi, Politecnico di Milano, vers.27.03.13 01.12.25

ESΣ05.xxxx.151

@ Adolfo Zavelani Rossi, Politecnico di Milano, vers.27.03.13 01.12.25

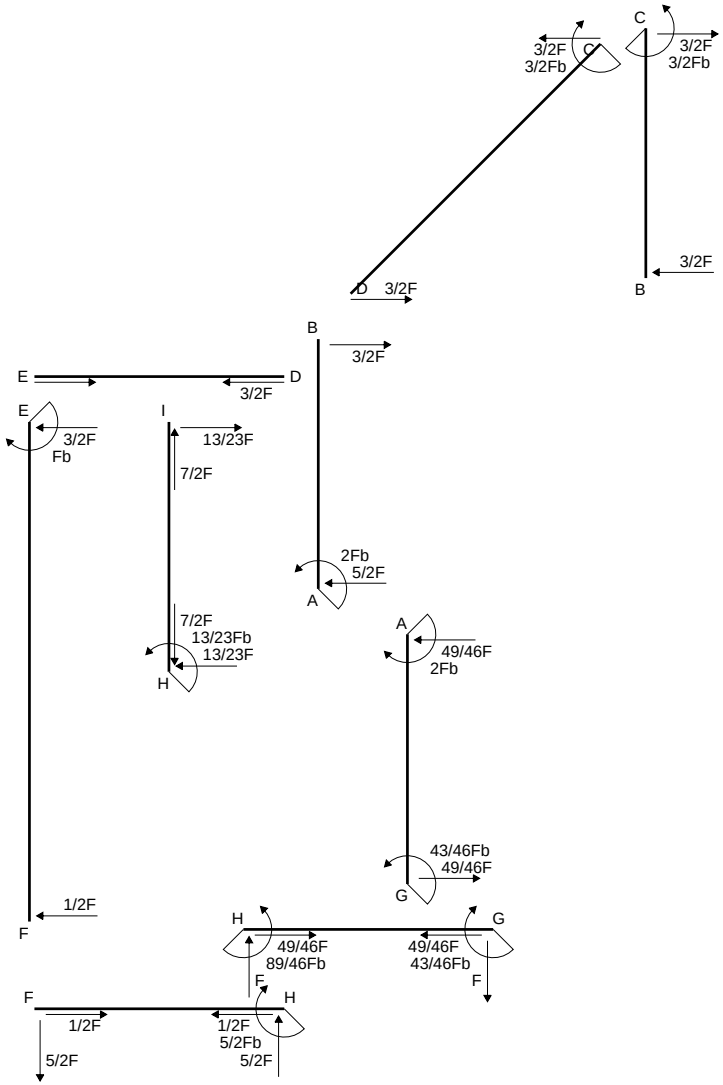
C
3/2F
3/2Fb
C
3/2F
3/2Fb
3/2F
D 3/2F
B
B
3/2F
E
D
3/2F
E
3/2F
Fb
I
13/23F
7/2F
2Fb
5/2F
A
7/2F
13/23Fb
13/23F
H
A
49/46F
2Fb
43/46Fb
49/46F
G
1/2F
F
H
G
49/46F
89/46Fb
49/46F
43/46Fb
F
F
H
F
1/2F
1/2F
5/2Fb
5/2F
5/2F

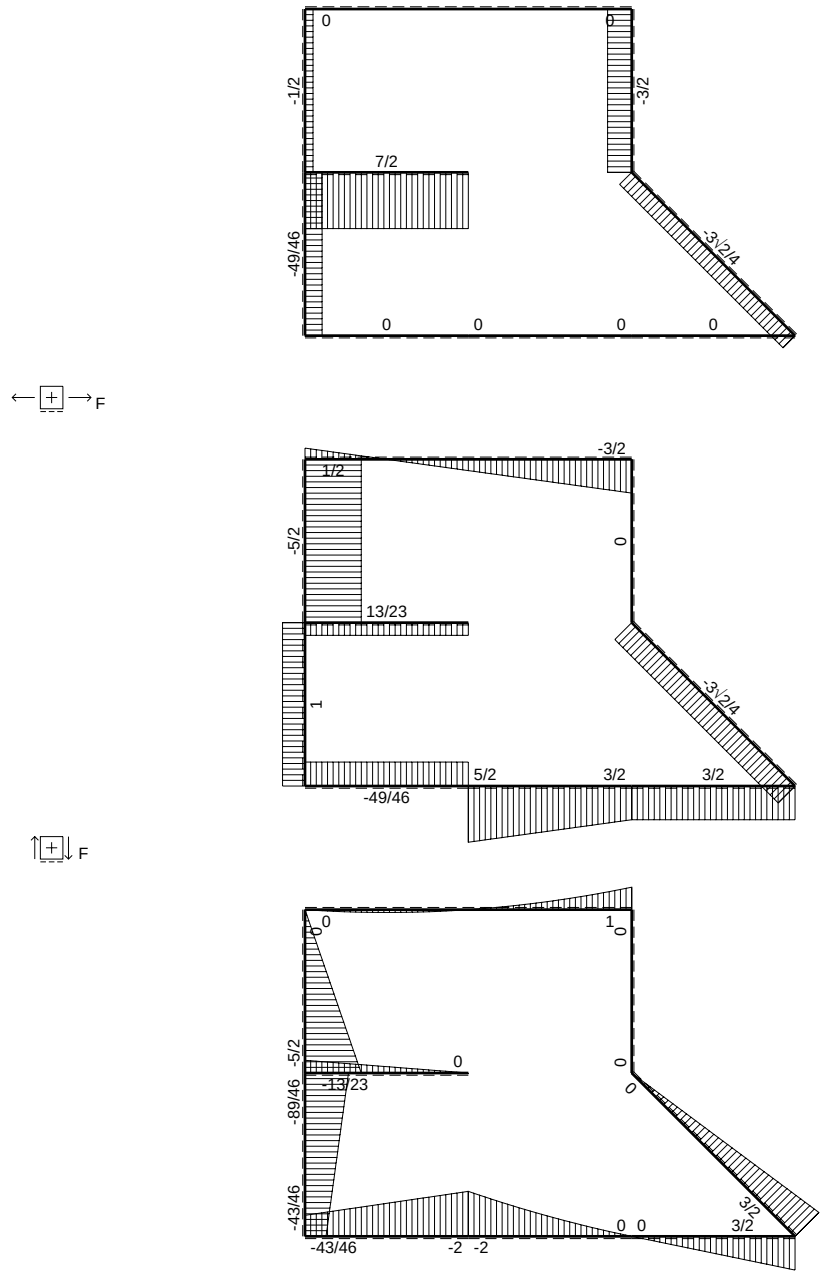
0
0
-1/2
-3/2
7/2
-49/46
-3√2/4
0
0
0
0
F
-3/2
1/2
-5/2
0
13/23
1
-3√2/4
5/2
3/2
3/2
-49/46
F
0
1
0
0
-5/2
0
-13/23
-89/46
0
0
-43/46
3/2
0 0
3/2
-43/46
-2 -2
Fb

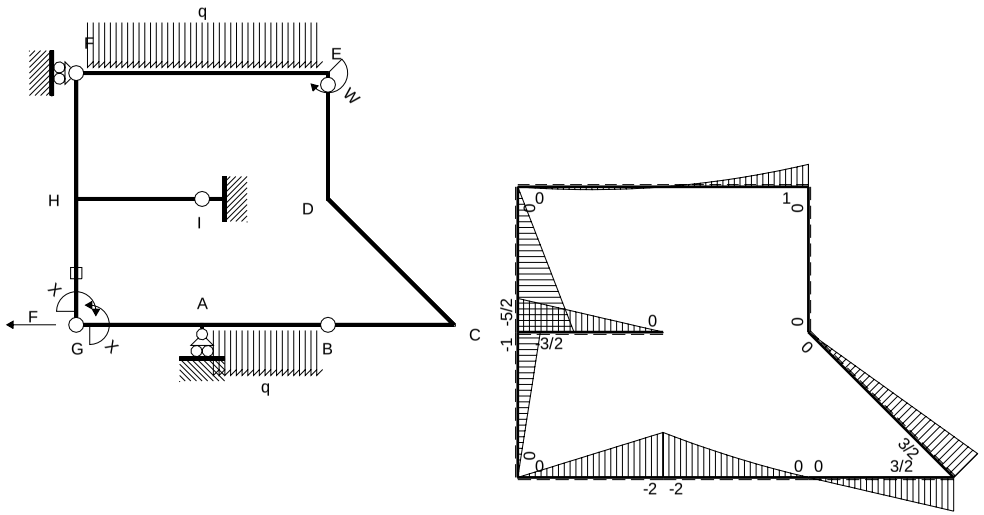

M_0 flessione da carichi assegnati

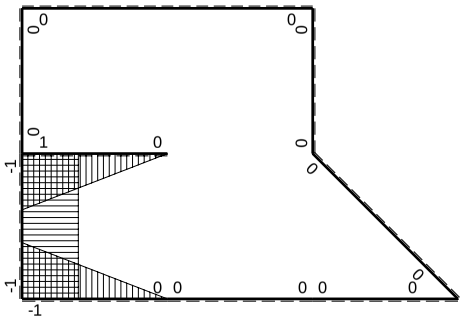

M_x flessione da iperstatica X=1

Quadro contributi PLV per iperstatica $X=W_{GA}$

→	$M_x(x)$	$M_0(x)$	M_xM_0	M_xM_x	$\int M_xM_0/EJdx$	$\int XM_xM_x/EJdx$
AB b	0	$-2Fb+5/2Fx-1/2qx^2$	0	0	0	0
BA b	0	$3/2Fx+1/2qx^2$	0	0		
BC b	0	3/2Fx	0	0	0	0
CB b	0	$-3/2Fb+3/2Fx$	0	0		
CD $\sqrt{2}b$	0	$3/2Fb-3\sqrt{2}/4Fx$	0	0	0	0
DE b	0	0	0	0	0	0
ED b	0	0	0	0		
EF 2b	0	$Fb-3/2Fx+1/2qx^2$	0	0	0	0
FE 2b	0	$1/2Fx-1/2qx^2$	0	0		
GA b	$-1+x/b$	$-2Fx$	$2Fx-2Fx^2/b$	$1-2x/b+x^2/b^2$	$1/3Fb^2/EJ$	1/3Xb/EJ
AG b	x/b	$2Fb-2Fx$	$2Fx-2Fx^2/b$	x^2/b^2		
FH b	0	$-5/2Fx$	0	0	0	0
HF b	0	$5/2Fb-5/2Fx$	0	0		
HI b	$1-x/b$	$-3/2Fb+3/2Fx$	$-3/2Fb+3Fx-3/2Fx^2/b$	$1-2x/b+x^2/b^2$	$-1/2Fb^2/EJ$	1/3Xb/EJ
IH b	$-x/b$	$3/2Fx$	$-3/2Fx^2/b$	x^2/b^2		
HG b	-1	$-Fb+Fx$	$Fb-Fx$	1	$1/2Fb^2/EJ$	Xb/EJ
GH b	1	Fx	Fx	1		
HG	elongazione asta $N_{1HG}\varepsilon_{HG}L_{HG}$				$-Fb^2/EJ$	
A	molla nodo $-V_{1A}(V_{0A}+XV_{1A})/k_A$				$-9/8Fb^2/EJ$	1/4Xb/EJ
	totali				$-43/24Fb^2/EJ$	23/12Xb/EJ
	iperstatica $X=W_{GA}$				43/46Fb	

Sviluppi di calcolo iperstatica

$L^{XX}_{GA} = \int_o^b (1 - 2\,x/b + x^2/b^2)\ 1/EJ\ dx = [\ x - x^2/b + 1/3\ x^3/b^2\ ]_o^b\ 1/EJ$

$= (\ b - b + 1/3\ b\ )\ 1/EJ\ = 1/3\ b/EJ$

$L^{XX}_{AG} = \int_o^b (\ x^2/b^2\ )\ 1/EJ\ dx = [1/3\ x^3/b^2\ ]_o^b\ 1/EJ$

$= (1/3\ b\ )\ 1/EJ\ = 1/3\ b/EJ$

$L^{XX}_{HI} = \int_o^b (1 - 2\,x/b + x^2/b^2)\ 1/EJ\ dx = [\ x - x^2/b + 1/3\ x^3/b^2\ ]_o^b\ 1/EJ$

$= (\ b - b + 1/3\ b\ )\ 1/EJ\ = 1/3\ b/EJ$

$L^{XX}_{IH} = \int_o^b (\ x^2/b^2\ )\ 1/EJ\ dx = [1/3\ x^3/b^2\ ]_o^b\ 1/EJ$

$= (1/3\ b\ )\ 1/EJ\ = 1/3\ b/EJ$

$L^{XX}_{HG} = \int_o^b (1\ )\ 1/EJ\ dx = [\ x\ ]_o^b\ 1/EJ$

$= (\ b\ )\ 1/EJ\ =\ b/EJ$

$L^{XX}_{GH} = \int_o^b (1\ )\ 1/EJ\ dx = [\ x\ ]_o^b\ 1/EJ$

$= (\ b\ )\ 1/EJ\ =\ b/EJ$

$L^{Xo}_{GA} = \int_o^b (2\,x/b - 2\,x^2/b^2\ )\ Fb\ 1/EJ\ dx = [\ x^2/b - 2/3\ x^3/b^2\ ]_o^b\ Fb\ 1/EJ$

$= (\ b - 2/3\ b\ )\ Fb\ 1/EJ\ = 1/3\ Fb^2/EJ$

$L^{Xo}_{AG} = \int_o^b (2\,x/b - 2\,x^2/b^2\ )\ Fb\ 1/EJ\ dx = [\ x^2/b - 2/3\ x^3/b^2\ ]_o^b\ Fb\ 1/EJ$

$= (\ b - 2/3\ b\ )\ Fb\ 1/EJ\ = 1/3\ Fb^2/EJ$

$L^{Xo}_{HI} = \int_o^b (-3/2 + 3\,x/b - 3/2\ x^2/b^2\ )\ Fb\ 1/EJ\ dx = [-3/2\ x + 3/2\ x^2/b - 1/2\ x^3/b^2\ ]_o^b\ Fb\ 1/EJ$

$= (-3/2\ b + 3/2\ b - 1/2\ b\ )\ Fb\ 1/EJ\ = -1/2\ Fb^2/EJ$

$L^{Xo}_{IH} = \int_o^b (-3/2\ x^2/b^2\ )\ Fb\ 1/EJ\ dx = [-1/2\ x^3/b^2\ ]_o^b\ Fb\ 1/EJ$

$= (-1/2\ b\ )\ Fb\ 1/EJ\ = -1/2\ Fb^2/EJ$

$L^{Xo}_{HG} = \int_o^b (1 - x/b\ )\ Fb\ 1/EJ\ dx - 1\ \ (-1)\ \ (-1)\ \ Fb^2/EJ = [\ x - 1/2\ x^2/b\ ]_o^b\ Fb\ 1/EJ\ \ - 1\ \ (-1)\ \ (-1)\ \ Fb^2/EJ$

$= (\ b - 1/2\ b\ )\ Fb\ 1/EJ\ \ - 1\ \ (-1)\ \ (-1)\ \ Fb^2/EJ = -1/2\ \ Fb^2/EJ$

$L^{Xo}_{GH} = \int_o^b (\ x/b\ )\ Fb\ 1/EJ\ dx - 1\ \ (-1)\ \ (-1)\ \ Fb^2/EJ = [1/2\ x^2/b\ ]_o^b\ Fb\ 1/EJ\ \ - 1\ \ (-1)\ \ (-1)\ \ Fb^2/EJ$

$= (1/2\ b\ )\ Fb\ 1/EJ\ \ - 1\ \ (-1)\ \ (-1)\ \ Fb^2/EJ = -1/2\ \ Fb^2/EJ$

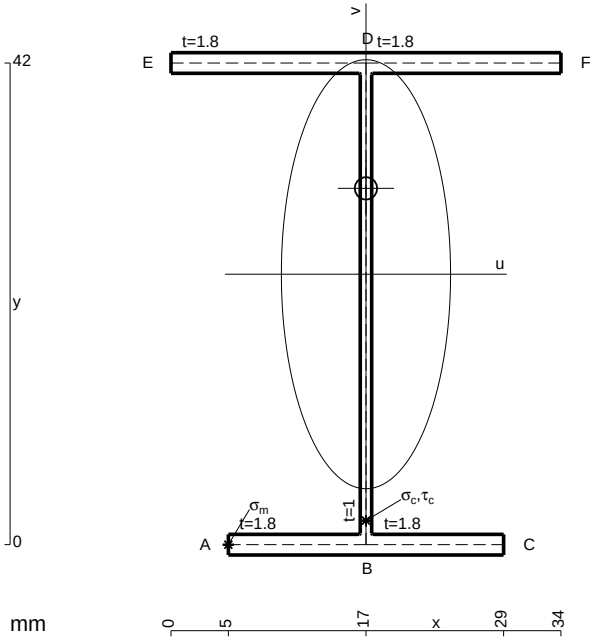

A = 146.4 mm^2
J_u = 51238. mm^4
J_v = 7969. mm^4
J_t = 126.8 mm^4
y_o = 7.49 mm
y_g = 23.58 mm
N = -220. N
T_y = -1100. N
M_x = -473000. Nmm
x_m = 5. mm
u_m = -12. mm
v_m = -23.58 mm
$\sigma_m = N/A - Mv/J_u$ = -219.2 N/mm^2
x_c = 17. mm
v_c = -23.58 mm
$\sigma_c = N/A - Mv/J_u$ = -219.2 N/mm^2
$\tau_c = TS^*/tJ_u$ = 21.87 N/mm^2
$\tau_g = TS^*/tJ_u$ = 21.87 N/mm^2
t_c = 440. mm
$\sigma_o = \sqrt{\sigma^2 + 3\tau^2}$ = 222.4 N/mm^2

ESΣ05.xxxx.152

@ Adolfo Zavelani Rossi, Politecnico di Milano, vers.27.03.13 01.12.25

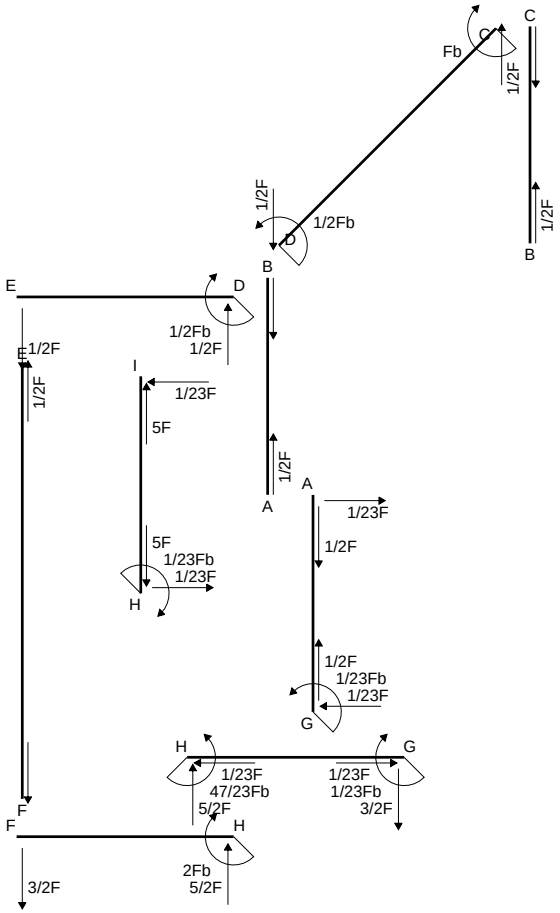
C
Fb
1/2F
1/2F
1/2Fb
D
B
E
D
1/2Fb
1/2F
E
1/2F
1/2F
I
1/23F
5F
1/2F
A
A
1/23F
1/2F
5F
1/23Fb
1/23F
H
1/2F
1/23Fb
1/23F
G
H
G
1/23F
47/23Fb
5/2F
1/23F
1/23Fb
3/2F
F
F
H
2Fb
5/2F
3/2F

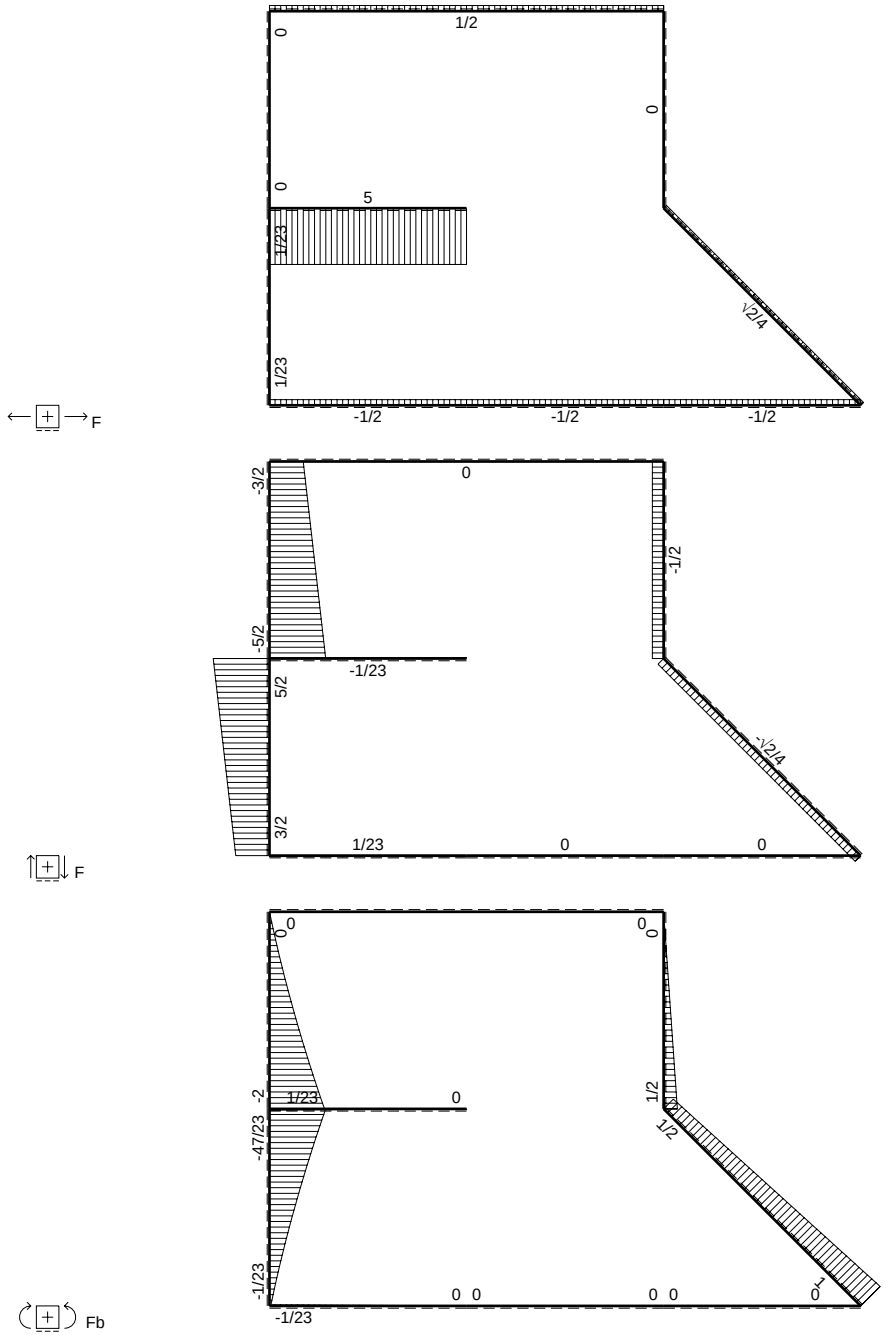
F
0
1/2
0
0
5
1/23
1/2/4
1/23
-1/2
-1/2
-1/2
F
-3/2
0
-1/2
-5/2
-1/23
5/2
1/2/4
3/2
1/23
0
0
Fb
0
0
0
0
-2
1/23
0
1/2
1/2
-47/23
-1/23
0 0
0 0
0
-1/23

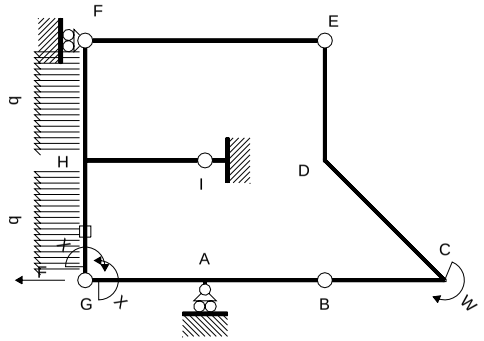

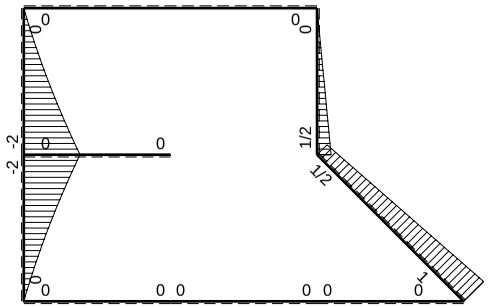

M_0 flessione da carichi assegnati

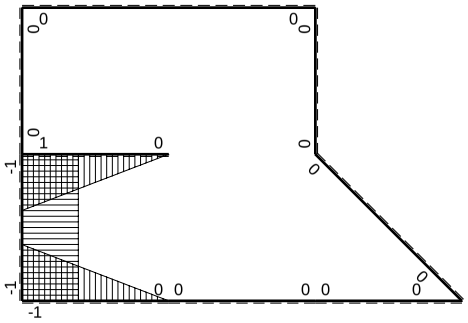

M_x flessione da iperstatica X=1

Quadro contributi PLV per iperstatica $X=W_{GA}$

→	$M_x(x)$	$M_0(x)$	M_xM_0	M_xM_x	$\int M_xM_0/EJdx$	$\int XM_xM_x/EJdx$
AB b	0	0	0	0	0	0
BA b	0	0	0	0		
BC b	0	0	0	0	0	0
CB b	0	0	0	0		
CD $\sqrt{2}$b	0	Fb-$\sqrt{2}$/4Fx	0	0	0	0
DE b	0	1/2Fb-1/2Fx	0	0	0	0
ED b	0	-1/2Fx	0	0		
EF 2b	0	0	0	0	0	0
FE 2b	0	0	0	0		
GA b	-1+x/b	0	0	1-2x/b+x^2/b^2	0	1/3Xb/EJ
AG b	x/b	0	0	x^2/b^2		
FH b	0	-3/2Fx-1/2qx^2	0	0	0	0
HF b	0	2Fb-5/2Fx+1/2qx^2	0	0		
HI b	1-x/b	0	0	1-2x/b+x^2/b^2	0	1/3Xb/EJ
IH b	-x/b	0	0	x^2/b^2		
HG b	-1	-2Fb+5/2Fx-1/2qx^2	2Fb-5/2Fx+1/2Fx^2/b	1	11/12Fb^2/EJ	Xb/EJ
GH b	1	3/2Fx+1/2qx^2	3/2Fx+1/2Fx^2/b	1		
HG	elongazione asta $N_{1HG}\varepsilon_{HG}L_{HG}$				-Fb^2/EJ	
A	molla nodo $-V_{1A}(V_{0A}+XV_{1A})/k_A$					1/4Xb/EJ
	totali				-1/12Fb^2/EJ	23/12Xb/EJ
	iperstatica $X=W_{GA}$				1/23Fb	

Sviluppi di calcolo iperstatica

$L^{XX}_{GA} = \int_o^b (1 - 2\,x/b + x^2/b^2)\ 1/EJ\ dx = [\ x - x^2/b + 1/3\ x^3/b^2\ ]_o^b\ 1/EJ$

$= (\ b - b + 1/3\ b\ )\ 1/EJ\ = 1/3\ b/EJ$

$L^{XX}_{AG} = \int_o^b (\ x^2/b^2\ )\ 1/EJ\ dx = [1/3\ x^3/b^2\ ]_o^b\ 1/EJ$

$= (1/3\ b\ )\ 1/EJ\ = 1/3\ b/EJ$

$L^{XX}_{HI} = \int_o^b (1 - 2\,x/b + x^2/b^2)\ 1/EJ\ dx = [\ x - x^2/b + 1/3\ x^3/b^2\ ]_o^b\ 1/EJ$

$= (\ b - b + 1/3\ b\ )\ 1/EJ\ = 1/3\ b/EJ$

$L^{XX}_{IH} = \int_o^b (\ x^2/b^2\ )\ 1/EJ\ dx = [1/3\ x^3/b^2\ ]_o^b\ 1/EJ$

$= (1/3\ b\ )\ 1/EJ\ = 1/3\ b/EJ$

$L^{XX}_{HG} = \int_o^b (1\ )\ 1/EJ\ dx = [\ x\ ]_o^b\ 1/EJ$

$= (\ b\ )\ 1/EJ\ =\ b/EJ$

$L^{XX}_{GH} = \int_o^b (1\ )\ 1/EJ\ dx = [\ x\ ]_o^b\ 1/EJ$

$= (\ b\ )\ 1/EJ\ =\ b/EJ$

$L^{Xo}_{HG} = \int_o^b (2 - 5/2\ x/b + 1/2\ x^2/b^2)\ Fb\ 1/EJ\ dx - 1\ \ (-1)\ \ (-1)\ \ Fb^2/EJ$

$= [2\ x - 5/4\ x^2/b + 1/6\ x^3/b^2\ ]_o^b\ Fb\ 1/EJ\ - 1\ \ (-1)\ \ (-1)\ \ Fb^2/EJ$

$= (2\ b - 5/4\ b + 1/6\ b\ )\ Fb\ 1/EJ\ - 1\ \ (-1)\ \ (-1)\ \ Fb^2/EJ = -1/12\ \ Fb^2/EJ$

$L^{Xo}_{GH} = \int_o^b (3/2\ x/b + 1/2\ x^2/b^2)\ Fb\ 1/EJ\ dx - 1\ \ (-1)\ \ (-1)\ \ Fb^2/EJ$

$= [3/4\ x^2/b + 1/6\ x^3/b^2\ ]_o^b\ Fb\ 1/EJ\ - 1\ \ (-1)\ \ (-1)\ \ Fb^2/EJ$

$= (3/4\ b + 1/6\ b\ )\ Fb\ 1/EJ\ - 1\ \ (-1)\ \ (-1)\ \ Fb^2/EJ = -1/12\ \ Fb^2/EJ$

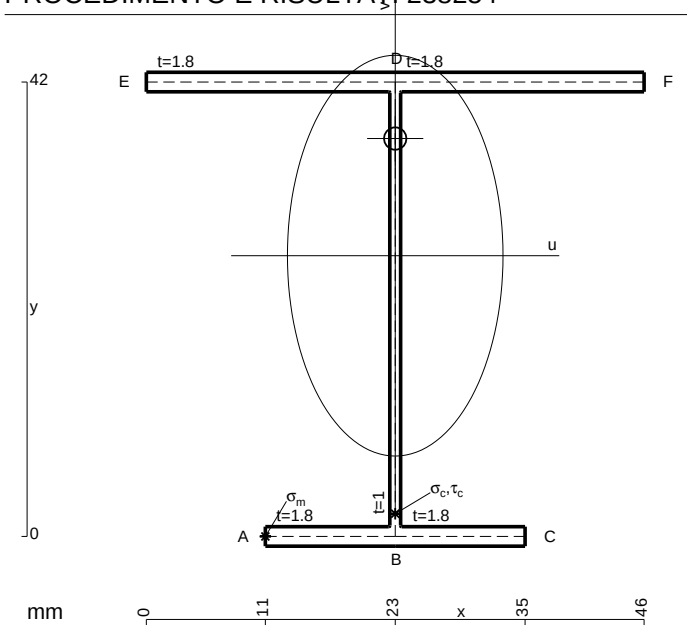

A = 168. mm^2
J_u = 57624. mm^4
J_v = 16674. mm^4
J_t = 150.1 mm^4
y_o = 10.83 mm
y_g = 25.95 mm
T_y = -1375. N
M_x = -506000. Nmm
x_m = 11. mm
u_m = -12. mm
v_m = -25.95 mm
$\sigma_m = -Mv/J_u$ = -227.9 N/mm^2
x_c = 23. mm
v_c = -25.95 mm
$\sigma_c = -Mv/J_u$ = -227.9 N/mm^2
$\tau_c = TS^*/tJ_u$ = 26.75 N/mm^2
$\tau_g = TS^*/tJ_u$ = 26.75 N/mm^2
t_c = 550. mm
$\sigma_o = \sqrt{\sigma^2 + 3\tau^2}$ = 232.5 N/mm^2

ESΣ05.xxxx.153

@ Adolfo Zavelani Rossi, Politecnico di Milano, vers.27.03.13 01.12.25

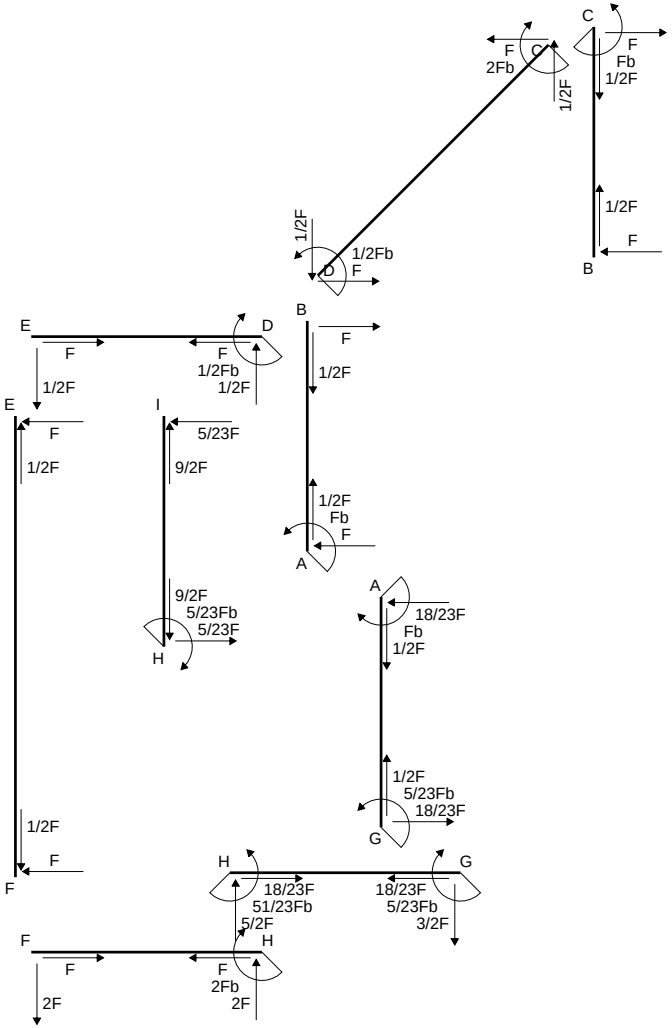
C
F
2Fb
C
1/2F
F
Fb
1/2F
1/2F
1/2F
F
B
1/2F
1/2Fb
D
F
E
D
F
F
1/2Fb
1/2F
B
F
1/2F
E
F
1/2F
I
5/23F
9/2F
1/2F
Fb
F
A
9/2F
5/23Fb
5/23F
H
A
18/23F
Fb
1/2F
1/2F
5/23Fb
18/23F
G
1/2F
F
F
H
18/23F
51/23Fb
5/2F
H
G
18/23F
5/23Fb
3/2F
F
F
F
2Fb
2F
2F

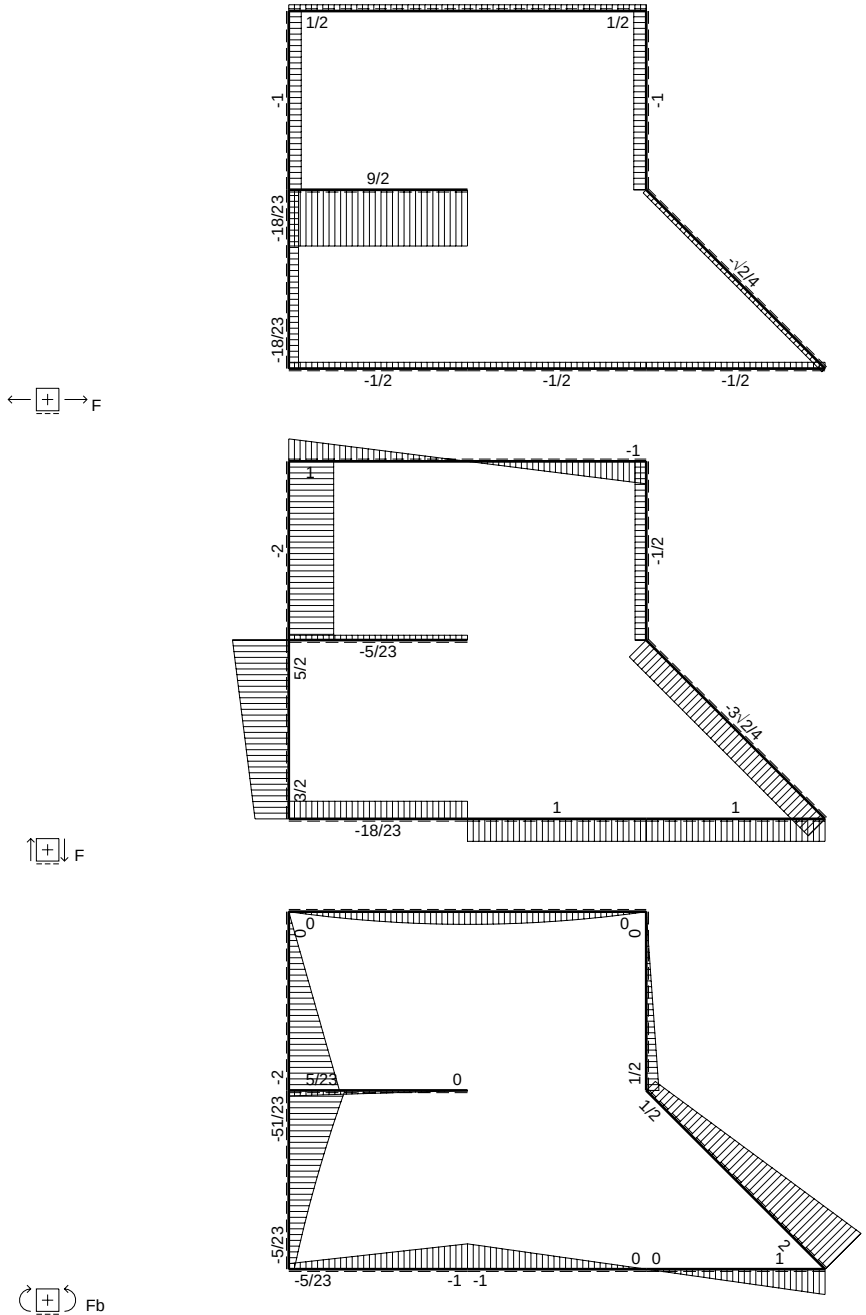
F
1/2
1/2
-1
-1
9/2
-18/23
-18/23
-√2/4
-1/2
-1/2
-1/2
F
-1
1
-2
-1/2
-5/23
5/2
-3√2/4
3/2
1
1
-18/23
F
0
0
0
0
-2
5/23
0
1/2
1/2
-51/23
-5/23
0 0
1
-5/23
-1 -1
Fb

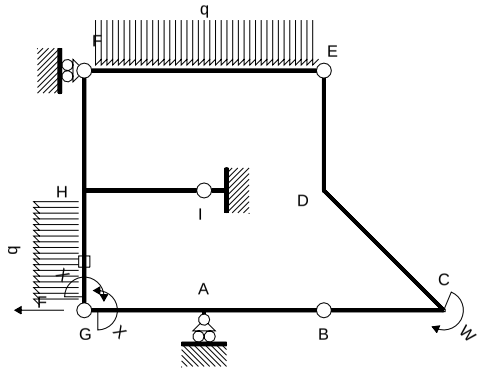

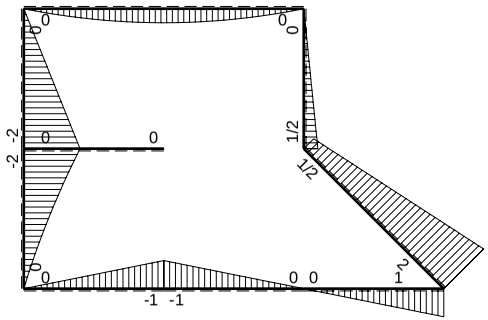

M_0 flessione da carichi assegnati

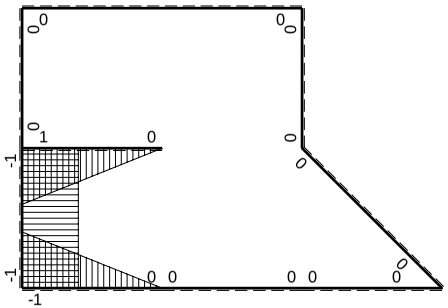

M_x flessione da iperstatica X=1

Quadro contributi PLV per iperstatica $X=W_{GA}$

→	$M_x(x)$	$M_0(x)$	M_xM_0	M_xM_x	$\int M_xM_0/EJdx$	$\int XM_xM_x/EJdx$
AB b	0	-Fb+Fx	0	0	0	0
BA b	0	Fx	0	0		
BC b	0	Fx	0	0	0	0
CB b	0	-Fb+Fx	0	0		
CD √2b	0	2Fb-3√2/4Fx	0	0	0	0
DE b	0	1/2Fb-1/2Fx	0	0	0	0
ED b	0	-1/2Fx	0	0		
EF 2b	0	$-Fx+1/2qx^2$	0	0	0	0
FE 2b	0	$Fx-1/2qx^2$	0	0		
GA b	-1+x/b	-Fx	$Fx-Fx^2/b$	$1-2x/b+x^2/b^2$	$1/6Fb^2/EJ$	1/3Xb/EJ
AG b	x/b	Fb-Fx	$Fx-Fx^2/b$	x^2/b^2		
FH b	0	-2Fx	0	0	0	0
HF b	0	2Fb-2Fx	0	0		
HI b	1-x/b	0	0	$1-2x/b+x^2/b^2$	0	1/3Xb/EJ
IH b	-x/b	0	0	x^2/b^2		
HG b	-1	$-2Fb+5/2Fx-1/2qx^2$	$2Fb-5/2Fx+1/2Fx^2/b$	1	$11/12Fb^2/EJ$	Xb/EJ
GH b	1	$3/2Fx+1/2qx^2$	$3/2Fx+1/2Fx^2/b$	1		
HG	elongazione asta $N_{1HG}\varepsilon_{HG}L_{HG}$				$-Fb^2/EJ$	
A	molla nodo $-V_{1A}(V_{0A}+XV_{1A})/k_A$				$-1/2Fb^2/EJ$	1/4Xb/EJ
	totali				$-5/12Fb^2/EJ$	23/12Xb/EJ
	iperstatica $X=W_{GA}$				5/23Fb	

Sviluppi di calcolo iperstatica

$L^{XX}_{GA} = \int_o^b (1 - 2\,x/b + x^2/b^2)\ 1/EJ\ dx = [\,x - x^2/b + 1/3\,x^3/b^2\,]_o^b\ 1/EJ$

$= (\,b - b + 1/3\,b\,)\ 1/EJ\ = 1/3\ b/EJ$

$L^{XX}_{AG} = \int_o^b (\,x^2/b^2\,)\ 1/EJ\ dx = [1/3\,x^3/b^2\,]_o^b\ 1/EJ$

$= (1/3\,b\,)\ 1/EJ\ = 1/3\ b/EJ$

$L^{XX}_{HI} = \int_o^b (1 - 2\,x/b + x^2/b^2)\ 1/EJ\ dx = [\,x - x^2/b + 1/3\,x^3/b^2\,]_o^b\ 1/EJ$

$= (\,b - b + 1/3\,b\,)\ 1/EJ\ = 1/3\ b/EJ$

$L^{XX}_{IH} = \int_o^b (\,x^2/b^2\,)\ 1/EJ\ dx = [1/3\,x^3/b^2\,]_o^b\ 1/EJ$

$= (1/3\,b\,)\ 1/EJ\ = 1/3\ b/EJ$

$L^{XX}_{HG} = \int_o^b (1)\ 1/EJ\ dx = [\,x\,]_o^b\ 1/EJ$

$= (\,b\,)\ 1/EJ\ =\ b/EJ$

$L^{XX}_{GH} = \int_o^b (1)\ 1/EJ\ dx = [\,x\,]_o^b\ 1/EJ$

$= (\,b\,)\ 1/EJ\ =\ b/EJ$

$L^{Xo}_{GA} = \int_o^b (\,x/b - x^2/b^2\,)\ Fb\ 1/EJ\ dx = [1/2\,x^2/b - 1/3\,x^3/b^2\,]_o^b\ Fb\ 1/EJ$

$= (1/2\,b - 1/3\,b\,)\ Fb\ 1/EJ\ = 1/6\ Fb^2/EJ$

$L^{Xo}_{AG} = \int_o^b (\,x/b - x^2/b^2\,)\ Fb\ 1/EJ\ dx = [1/2\,x^2/b - 1/3\,x^3/b^2\,]_o^b\ Fb\ 1/EJ$

$= (1/2\,b - 1/3\,b\,)\ Fb\ 1/EJ\ = 1/6\ Fb^2/EJ$

$L^{Xo}_{HG} = \int_o^b (2 - 5/2\,x/b + 1/2\,x^2/b^2\,)\ Fb\ 1/EJ\ dx - 1\ \ (-1)\ \ (-1)\ \ Fb^2/EJ$

$= [\,2\,x - 5/4\,x^2/b + 1/6\,x^3/b^2\,]_o^b\ Fb\ 1/EJ\ - 1\ \ (-1)\ \ (-1)\ \ Fb^2/EJ$

$= (\,2\,b - 5/4\,b + 1/6\,b\,)\ Fb\ 1/EJ\ - 1\ \ (-1)\ \ (-1)\ \ Fb^2/EJ = -1/12\ \ Fb^2/EJ$

$L^{Xo}_{GH} = \int_o^b (3/2\,x/b + 1/2\,x^2/b^2\,)\ Fb\ 1/EJ\ dx - 1\ \ (-1)\ \ (-1)\ \ Fb^2/EJ$

$= [\,3/4\,x^2/b + 1/6\,x^3/b^2\,]_o^b\ Fb\ 1/EJ\ - 1\ \ (-1)\ \ (-1)\ \ Fb^2/EJ$

$= (\,3/4\,b + 1/6\,b\,)\ Fb\ 1/EJ\ - 1\ \ (-1)\ \ (-1)\ \ Fb^2/EJ = -1/12\ \ Fb^2/EJ$

PROCEDIMENTO E RISULTATI 238210 ESΣ05.xxxx.154

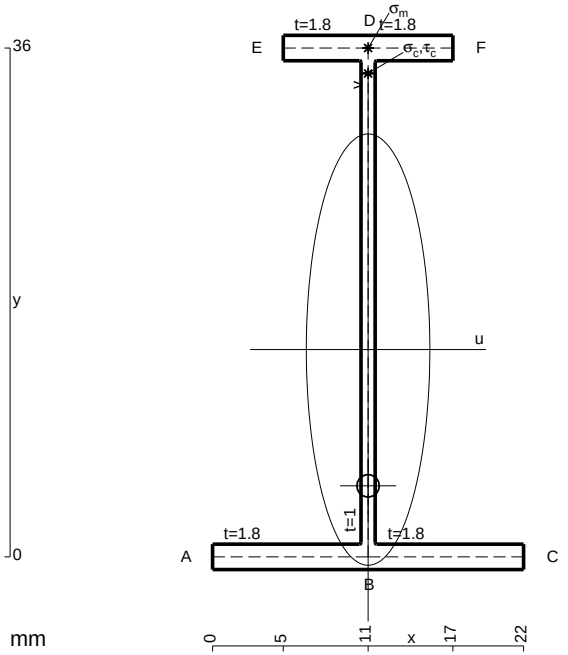

A = 97.2 mm^2
J_u = 22637. mm^4
J_v = 1856. mm^4
J_t = 78.1 mm^4
y_o = -9.64 mm
y_g = 14.67 mm
N = -290. N
T_y = -580. N
M_x = -249400. Nmm
x_m = 11. mm
y_m = 36. mm
v_m = 21.33 mm
$\sigma_m = N/A - Mv/J_u$ = 232.1 N/mm^2
y_c = 2. mm
u_c = -11. mm
v_c = -12.67 mm
$\sigma_c = N/A - Mv/J_u$ = 232.1 N/mm^2
$\tau_c = TS^*/tJ_u$ = 11.81 N/mm^2
$\tau_g = TS^*/tJ_u$ = 11.81 N/mm^2
t_c = 290. mm
$\sigma_o = \sqrt{\sigma^2 + 3\tau^2}$ = 233. N/mm^2

@ Adolfo Zavelani Rossi, Politecnico di Milano, vers.27.03.13 01.12.25

ESΣ05.xxxx.154

@ Adolfo Zavelani Rossi, Politecnico di Milano, vers.27.03.13 01.12.25

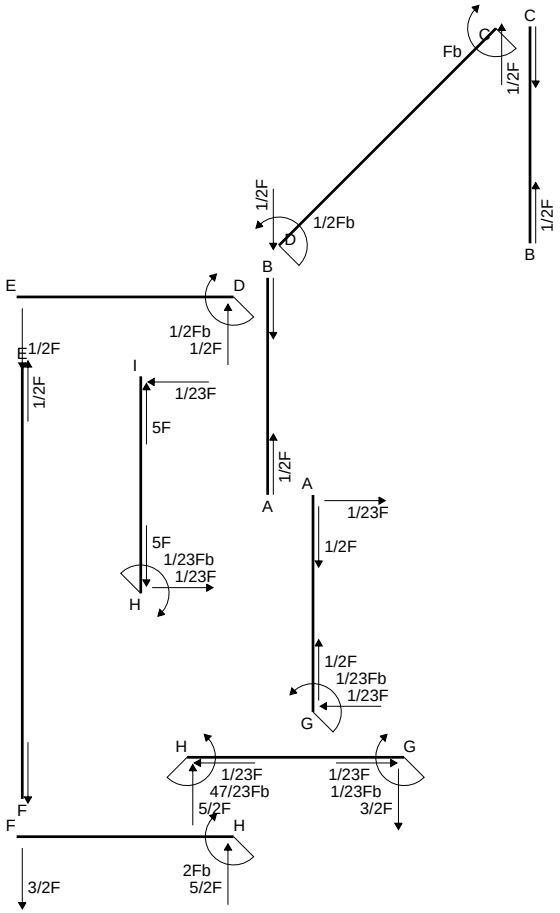
C
Fb
1/2F
1/2F
1/2Fb
D
B
E
D
1/2Fb
1/2F
E
1/2F
1/2F
I
1/23F
5F
1/2F
A
A
1/23F
1/2F
5F
1/23Fb
1/23F
H
1/2F
1/23Fb
1/23F
G
H
G
1/23F
47/23Fb
5/2F
1/23F
1/23Fb
3/2F
F
H
F
2Fb
5/2F
3/2F

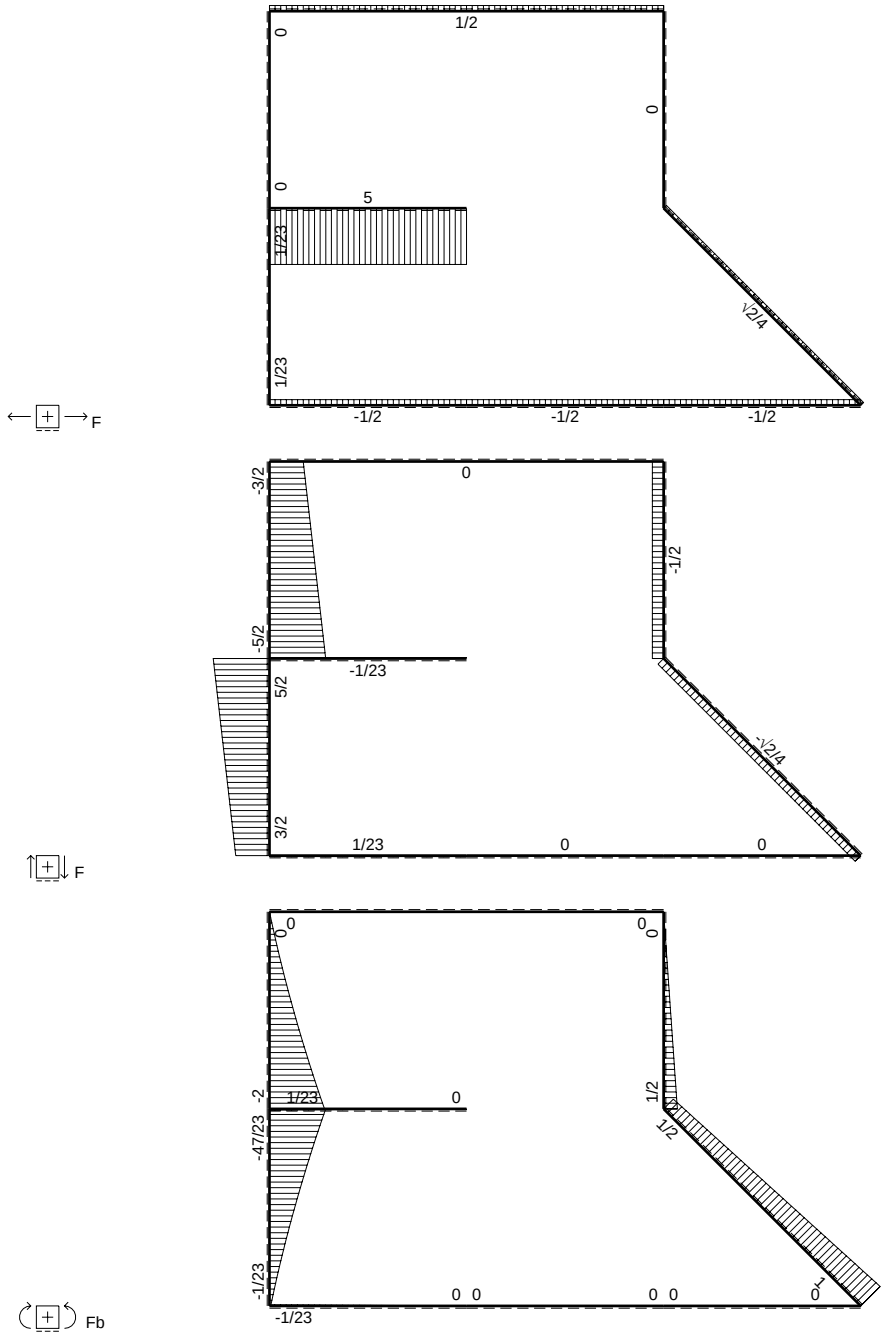
F
0
1/2
0
0
5
1/23
1/2/4
1/23
-1/2
-1/2
-1/2
F
-3/2
0
-1/2
-5/2
-1/23
5/2
1/2/4
3/2
1/23
0
0
Fb
0
0
0
0
-2
1/23
0
1/2
1/2
-47/23
-1/23
0 0
0 0
0
-1/23

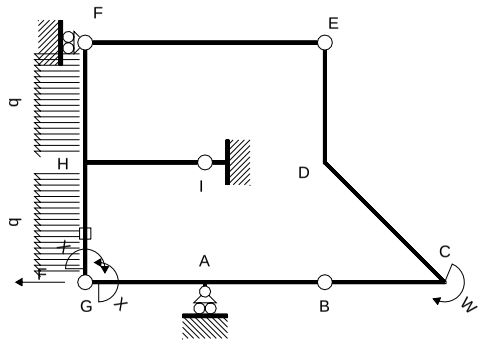

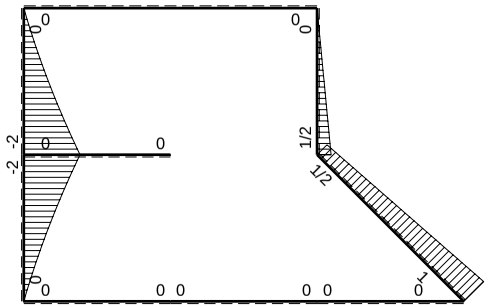

M_0 flessione da carichi assegnati

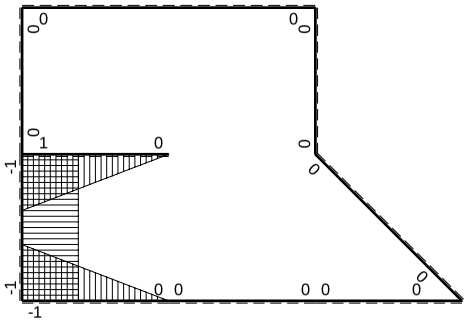

M_x flessione da iperstatica X=1

Quadro contributi PLV per iperstatica $X=W_{GA}$

→	$M_x(x)$	$M_0(x)$	M_xM_0	M_xM_x	$\int M_xM_0/EJdx$	$\int XM_xM_x/EJdx$
AB b	0	0	0	0	0	0
BA b	0	0	0	0		
BC b	0	0	0	0	0	0
CB b	0	0	0	0		
CD $\sqrt{2}$b	0	Fb-$\sqrt{2}$/4Fx	0	0	0	0
DE b	0	1/2Fb-1/2Fx	0	0	0	0
ED b	0	-1/2Fx	0	0		
EF 2b	0	0	0	0	0	0
FE 2b	0	0	0	0		
GA b	-1+x/b	0	0	1-2x/b+x^2/b^2	0	1/3Xb/EJ
AG b	x/b	0	0	x^2/b^2		
FH b	0	-3/2Fx-1/2qx^2	0	0	0	0
HF b	0	2Fb-5/2Fx+1/2qx^2	0	0		
HI b	1-x/b	0	0	1-2x/b+x^2/b^2	0	1/3Xb/EJ
IH b	-x/b	0	0	x^2/b^2		
HG b	-1	-2Fb+5/2Fx-1/2qx^2	2Fb-5/2Fx+1/2Fx^2/b	1	11/12Fb^2/EJ	Xb/EJ
GH b	1	3/2Fx+1/2qx^2	3/2Fx+1/2Fx^2/b	1		
HG	elongazione asta $N_{1HG}\varepsilon_{HG}L_{HG}$				-Fb^2/EJ	
A	molla nodo $-V_{1A}(V_{0A}+XV_{1A})/k_A$					1/4Xb/EJ
	totali				-1/12Fb^2/EJ	23/12Xb/EJ
	iperstatica $X=W_{GA}$				1/23Fb	

Sviluppi di calcolo iperstatica

$L^{XX}_{GA} = \int_o^b (1 - 2\,x/b + x^2/b^2)\ 1/EJ\ dx = [\ x - x^2/b + 1/3\ x^3/b^2\ ]_o^b\ 1/EJ$

$= (\ b - b + 1/3\ b\ )\ 1/EJ\ = 1/3\ b/EJ$

$L^{XX}_{AG} = \int_o^b (\ x^2/b^2\ )\ 1/EJ\ dx = [1/3\ x^3/b^2\ ]_o^b\ 1/EJ$

$= (1/3\ b\ )\ 1/EJ\ = 1/3\ b/EJ$

$L^{XX}_{HI} = \int_o^b (1 - 2\,x/b + x^2/b^2)\ 1/EJ\ dx = [\ x - x^2/b + 1/3\ x^3/b^2\ ]_o^b\ 1/EJ$

$= (\ b - b + 1/3\ b\ )\ 1/EJ\ = 1/3\ b/EJ$

$L^{XX}_{IH} = \int_o^b (\ x^2/b^2\ )\ 1/EJ\ dx = [1/3\ x^3/b^2\ ]_o^b\ 1/EJ$

$= (1/3\ b\ )\ 1/EJ\ = 1/3\ b/EJ$

$L^{XX}_{HG} = \int_o^b (1)\ 1/EJ\ dx = [\ x\ ]_o^b\ 1/EJ$

$= (\ b\ )\ 1/EJ\ =\ b/EJ$

$L^{XX}_{GH} = \int_o^b (1)\ 1/EJ\ dx = [\ x\ ]_o^b\ 1/EJ$

$= (\ b\ )\ 1/EJ\ =\ b/EJ$

$L^{Xo}_{HG} = \int_o^b (2 - 5/2\ x/b + 1/2\ x^2/b^2)\ Fb\ 1/EJ\ dx - 1\ \ (-1)\ \ (-1)\ \ Fb^2/EJ$

$= [2\,x - 5/4\ x^2/b + 1/6\ x^3/b^2\ ]_o^b\ Fb\ 1/EJ\ - 1\ \ (-1)\ \ (-1)\ \ Fb^2/EJ$

$= (2\,b - 5/4\ b + 1/6\ b\ )\ Fb\ 1/EJ\ - 1\ \ (-1)\ \ (-1)\ \ Fb^2/EJ = -1/12\ \ Fb^2/EJ$

$L^{Xo}_{GH} = \int_o^b (3/2\ x/b + 1/2\ x^2/b^2)\ Fb\ 1/EJ\ dx - 1\ \ (-1)\ \ (-1)\ \ Fb^2/EJ$

$= [3/4\ x^2/b + 1/6\ x^3/b^2\ ]_o^b\ Fb\ 1/EJ\ - 1\ \ (-1)\ \ (-1)\ \ Fb^2/EJ$

$= (3/4\ b + 1/6\ b\ )\ Fb\ 1/EJ\ - 1\ \ (-1)\ \ (-1)\ \ Fb^2/EJ = -1/12\ \ Fb^2/EJ$

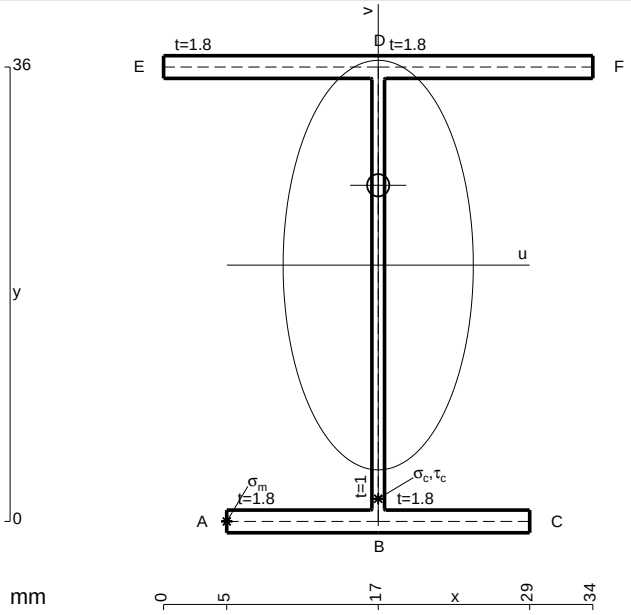

A = 140.4 mm^2
J_u = 36966. mm^4
J_v = 7969. mm^4
J_t = 124.8 mm^4
y_o = 6.325 mm
y_g = 20.31 mm
T_y = -975. N
M_x = -358800. Nmm
x_m = 5. mm
u_m = -12. mm
v_m = -20.31 mm
$\sigma_m = -Mv/J_u$ = -197.1 N/mm^2
x_c = 17. mm
v_c = -20.31 mm
$\sigma_c = -Mv/J_u$ = -197.1 N/mm^2
$\tau_c = TS^*/tJ_u$ = 23.14 N/mm^2
$\tau_g = TS^*/tJ_u$ = 23.14 N/mm^2
t_c = 390. mm
$\sigma_o = \sqrt{\sigma^2 + 3\tau^2}$ = 201.1 N/mm^2

ESΣ05.xxxx.155

@ Adolfo Zavelani Rossi, Politecnico di Milano, vers.27.03.13 01.12.25

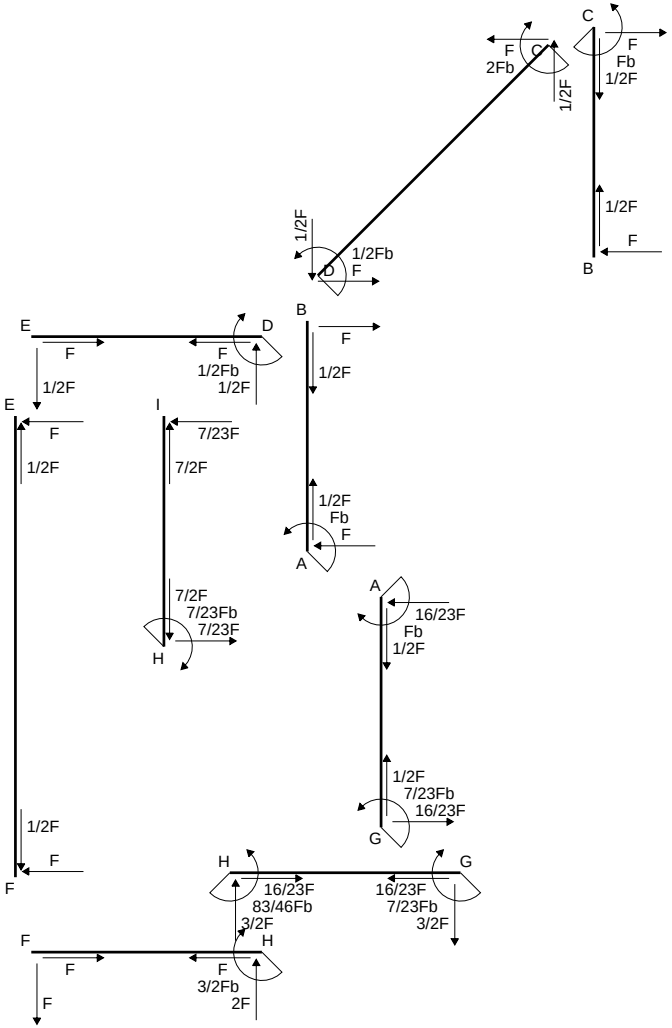
C
F
Fb
1/2F
F
2Fb
C
1/2F
1/2F
F
B
1/2F
1/2Fb
F
D
E
F
D
F
1/2Fb
1/2F
1/2F
B
F
1/2F
E
F
1/2F
I
7/23F
7/2F
1/2F
Fb
F
A
7/2F
7/23Fb
7/23F
H
A
16/23F
Fb
1/2F
1/2F
7/23Fb
16/23F
G
1/2F
F
F
H
16/23F
83/46Fb
3/2F
H
G
16/23F
7/23Fb
3/2F
F
F
F
F
3/2Fb
2F

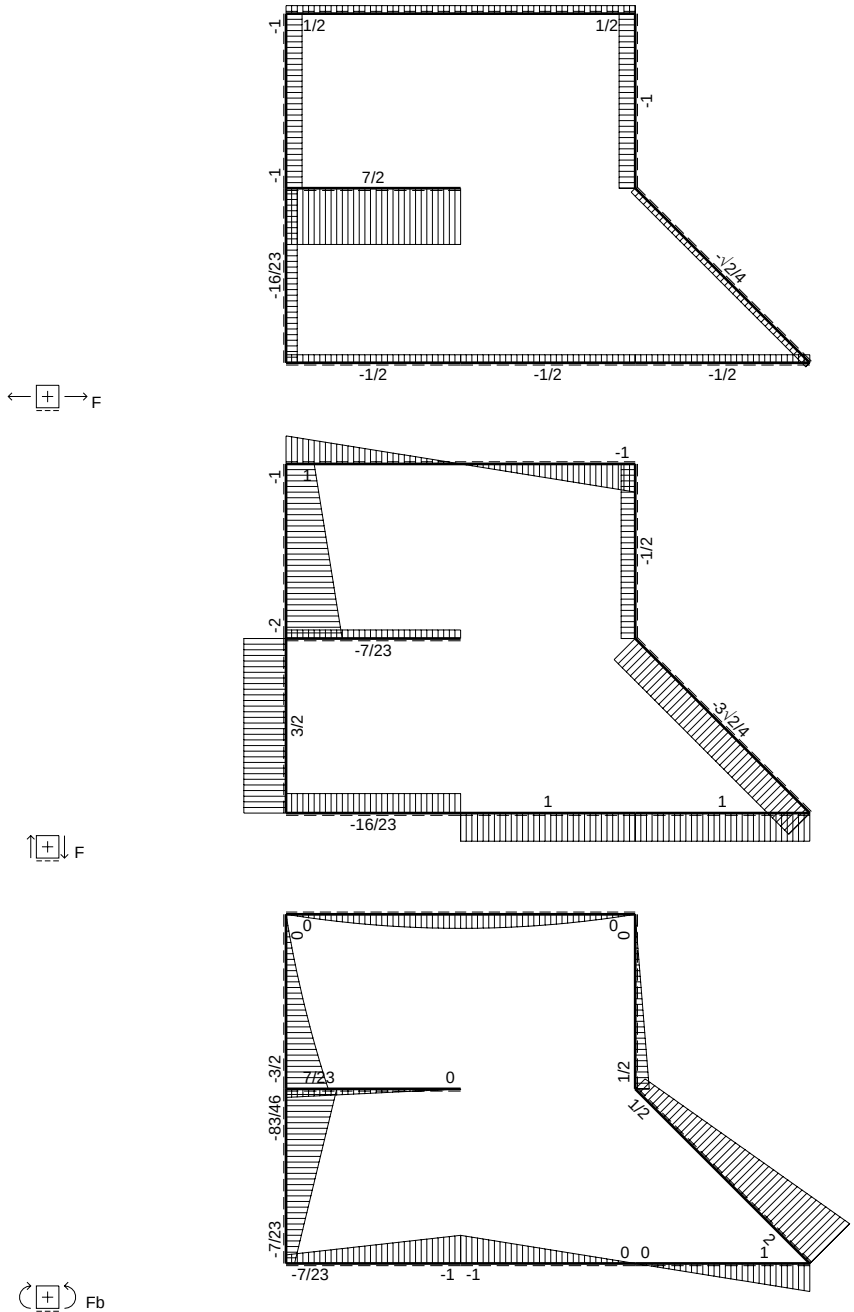
F
-1
1/2
1/2
-1
-1
7/2
-16/23
-√2/4
-1/2
-1/2
-1/2
F
-1
1
-1
-1/2
-2
-7/23
3/2
-3√2/4
1
1
-16/23
Fb
0
0
0
-3/2
7/23
0
1/2
1/2
-83/46
-7/23
0 0
2
1
-7/23
-1 -1

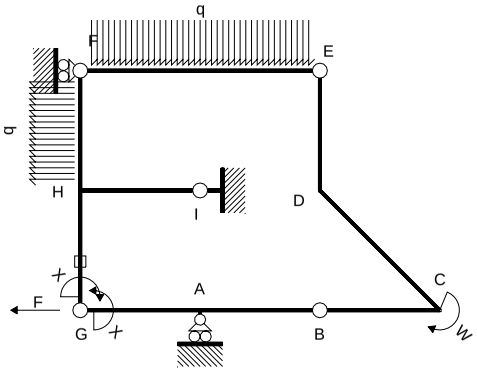

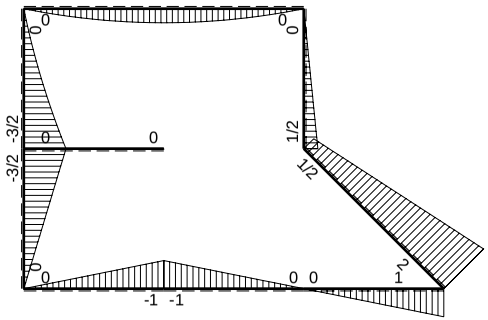

M_0 flessione da carichi assegnati

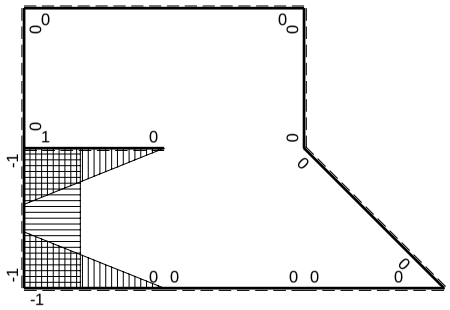

M_x flessione da iperstatica X=1

Quadro contributi PLV per iperstatica $X=W_{GA}$

→	$M_x(x)$	$M_0(x)$	M_xM_0	M_xM_x	$\int M_xM_0/EJdx$	$\int XM_xM_x/EJdx$
AB b	0	-Fb+Fx	0	0	0	0
BA b	0	Fx	0	0		
BC b	0	Fx	0	0	0	0
CB b	0	-Fb+Fx	0	0		
CD √2b	0	2Fb-3√2/4Fx	0	0	0	0
DE b	0	1/2Fb-1/2Fx	0	0	0	0
ED b	0	-1/2Fx	0	0		
EF 2b	0	$-Fx+1/2qx^2$	0	0	0	0
FE 2b	0	$Fx-1/2qx^2$	0	0		
GA b	-1+x/b	-Fx	$Fx-Fx^2/b$	$1-2x/b+x^2/b^2$	$1/6Fb^2/EJ$	1/3Xb/EJ
AG b	x/b	Fb-Fx	$Fx-Fx^2/b$	x^2/b^2		
FH b	0	$-Fx-1/2qx^2$	0	0	0	0
HF b	0	$3/2Fb-2Fx+1/2qx^2$	0	0		
HI b	1-x/b	0	0	$1-2x/b+x^2/b^2$	0	1/3Xb/EJ
IH b	-x/b	0	0	x^2/b^2		
HG b	-1	-3/2Fb+3/2Fx	3/2Fb-3/2Fx	1	$3/4Fb^2/EJ$	Xb/EJ
GH b	1	3/2Fx	3/2Fx	1		
HG	elongazione asta $N_{1HG}\varepsilon_{HG}L_{HG}$				$-Fb^2/EJ$	
A	molla nodo $-V_{1A}(V_{0A}+XV_{1A})/k_A$				$-1/2Fb^2/EJ$	1/4Xb/EJ
	totali				$-7/12Fb^2/EJ$	23/12Xb/EJ
	iperstatica $X=W_{GA}$				7/23Fb	

Sviluppi di calcolo iperstatica

$L^{XX}_{GA} = \int_o^b (1 - 2\,x/b + x^2/b^2)\ 1/EJ\ dx = [\,x - x^2/b + 1/3\,x^3/b^2\,]_o^b\ 1/EJ$

$= (\,b - b + 1/3\,b\,)\ 1/EJ\ = 1/3\ b/EJ$

$L^{XX}_{AG} = \int_o^b (\,x^2/b^2\,)\ 1/EJ\ dx = [1/3\,x^3/b^2\,]_o^b\ 1/EJ$

$= (1/3\,b\,)\ 1/EJ\ = 1/3\ b/EJ$

$L^{XX}_{HI} = \int_o^b (1 - 2\,x/b + x^2/b^2)\ 1/EJ\ dx = [\,x - x^2/b + 1/3\,x^3/b^2\,]_o^b\ 1/EJ$

$= (\,b - b + 1/3\,b\,)\ 1/EJ\ = 1/3\ b/EJ$

$L^{XX}_{IH} = \int_o^b (\,x^2/b^2\,)\ 1/EJ\ dx = [1/3\,x^3/b^2\,]_o^b\ 1/EJ$

$= (1/3\,b\,)\ 1/EJ\ = 1/3\ b/EJ$

$L^{XX}_{HG} = \int_o^b (1)\ 1/EJ\ dx = [\,x\,]_o^b\ 1/EJ$

$= (\,b\,)\ 1/EJ\ =\ b/EJ$

$L^{XX}_{GH} = \int_o^b (1)\ 1/EJ\ dx = [\,x\,]_o^b\ 1/EJ$

$= (\,b\,)\ 1/EJ\ =\ b/EJ$

$L^{Xo}_{GA} = \int_o^b (\,x/b - x^2/b^2\,)\ Fb\ 1/EJ\ dx = [1/2\,x^2/b - 1/3\,x^3/b^2\,]_o^b\ Fb\ 1/EJ$

$= (1/2\,b - 1/3\,b\,)\ Fb\ 1/EJ\ = 1/6\ Fb^2/EJ$

$L^{Xo}_{AG} = \int_o^b (\,x/b - x^2/b^2\,)\ Fb\ 1/EJ\ dx = [1/2\,x^2/b - 1/3\,x^3/b^2\,]_o^b\ Fb\ 1/EJ$

$= (1/2\,b - 1/3\,b\,)\ Fb\ 1/EJ\ = 1/6\ Fb^2/EJ$

$L^{Xo}_{HG} = \int_o^b (3/2 - 3/2\,x/b\,)\ Fb\ 1/EJ\ dx - 1\ \ (-1)\ \ (-1)\ \ Fb^2/EJ$

$= [3/2\,x - 3/4\,x^2/b\,]_o^b\ Fb\ 1/EJ\ -\ 1\ \ (-1)\ \ (-1)\ \ Fb^2/EJ$

$= (3/2\,b - 3/4\,b\,)\ Fb\ 1/EJ\ -\ 1\ \ (-1)\ \ (-1)\ \ Fb^2/EJ = -1/4\ \ Fb^2/EJ$

$L^{Xo}_{GH} = \int_o^b (3/2\,x/b\,)\ Fb\ 1/EJ\ dx - 1\ \ (-1)\ \ (-1)\ \ Fb^2/EJ = [3/4\,x^2/b\,]_o^b\ Fb\ 1/EJ\ -\ 1\ \ (-1)\ \ (-1)\ \ Fb^2/EJ$

$= (3/4\,b\,)\ Fb\ 1/EJ\ -\ 1\ \ (-1)\ \ (-1)\ \ Fb^2/EJ = -1/4\ \ Fb^2/EJ$

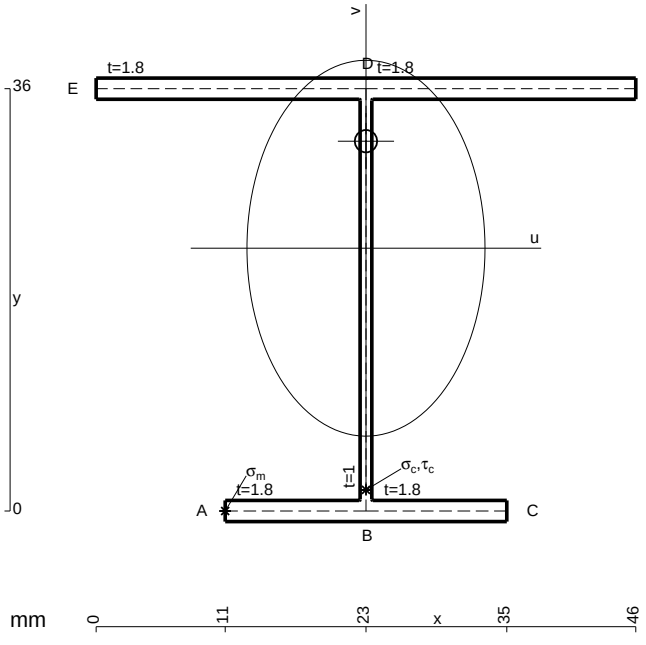

A = 162. mm^2
J_u = 41576. mm^4
J_v = 16674. mm^4
J_t = 148.1 mm^4
y_o = 9.123 mm
y_g = 22.4 mm
N = -520. N
T_y = -1040. N
M_x = -382200. Nmm
x_m = 11. mm
u_m = -12. mm
v_m = -22.4 mm
$\sigma_m = N/A - Mv/J_u$ = -209.1 N/mm^2
x_c = 23. mm
v_c = -22.4 mm
$\sigma_c = N/A - Mv/J_u$ = -209.1 N/mm^2
$\tau_c = TS^*/tJ_u$ = 24.21 N/mm^2
$\tau_g = TS^*/tJ_u$ = 24.21 N/mm^2
t_c = 520. mm
$\sigma_o = \sqrt{\sigma^2 + 3\tau^2}$ = 213.3 N/mm^2

ESΣ05.xxxx.156

@ Adolfo Zavelani Rossi, Politecnico di Milano, vers.27.03.13 01.12.25

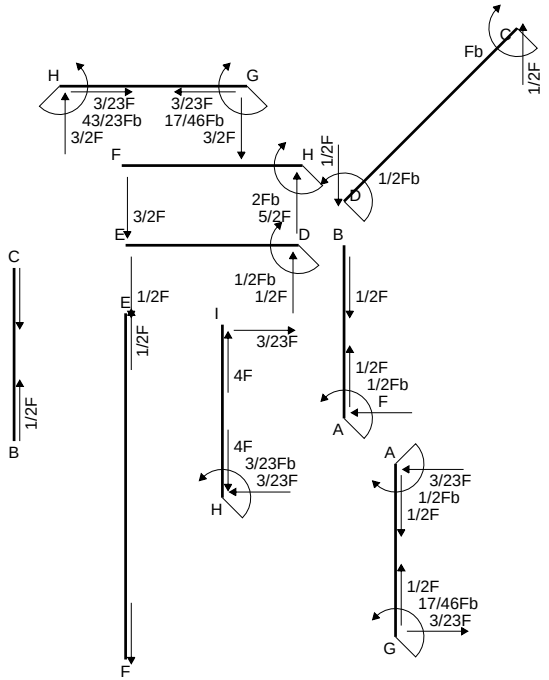
H
G
3/23F
43/23Fb
3/2F
3/23F
17/46Fb
3/2F
F
H
1/2F
Fb
C
1/2F
1/2Fb
D
2Fb
5/2F
3/2F
E
D
B
C
1/2Fb
1/2F
1/2F
E
1/2F
1/2F
I
3/23F
4F
1/2F
1/2Fb
F
A
B
4F
3/23Fb
3/23F
H
A
3/23F
1/2Fb
1/2F
1/2F
17/46Fb
3/23F
G
F

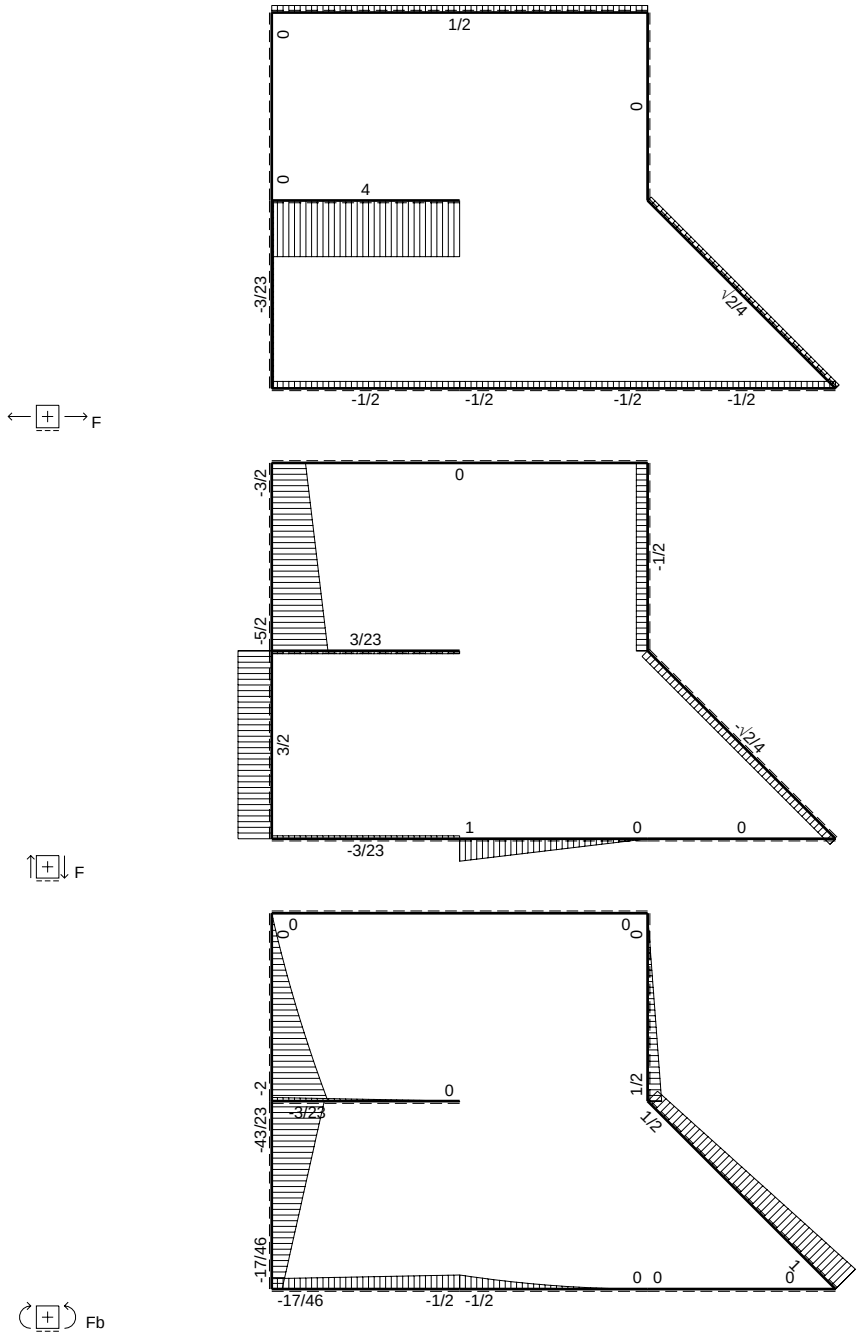
F
1/2
0
0
0
4
-3/23
√2/4
-1/2
-1/2
-1/2
-1/2
F
-3/2
0
-1/2
-5/2
3/23
3/2
√2/4
1
0
0
-3/23
Fb
0
0
0
0
-2
0
1/2
-43/23
3/23
1/2
√2/4
-17/46
0 0
0
-17/46
-1/2
-1/2

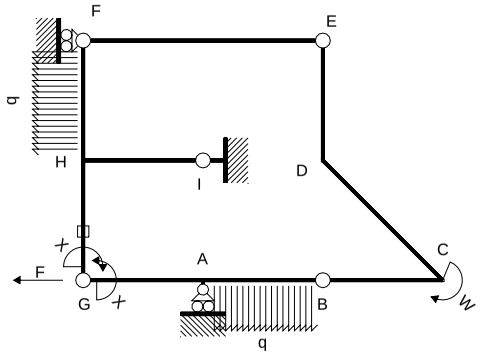

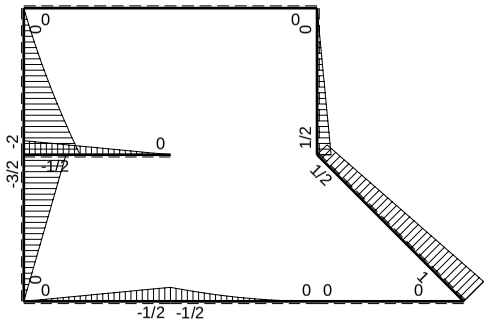

M_0 flessione da carichi assegnati

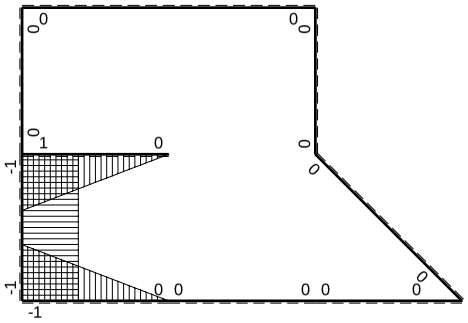

M_x flessione da iperstatica X=1

Quadro contributi PLV per iperstatica $X=W_{GA}$

→	$M_x(x)$	$M_0(x)$	M_xM_0	M_xM_x	$\int M_xM_0/EJdx$	$\int XM_xM_x/EJdx$
AB b	0	$-1/2Fb+Fx-1/2qx^2$	0	0	0	0
BA b	0	$1/2qx^2$	0	0		
BC b	0	0	0	0	0	0
CB b	0	0	0	0		
CD $\sqrt{2}b$	0	$Fb-\sqrt{2}/4Fx$	0	0	0	0
DE b	0	$1/2Fb-1/2Fx$	0	0	0	0
ED b	0	$-1/2Fx$	0	0		
EF 2b	0	0	0	0	0	0
FE 2b	0	0	0	0		
GA b	$-1+x/b$	$-1/2Fx$	$1/2Fx-1/2Fx^2/b$	$1-2x/b+x^2/b^2$	$1/12Fb^2/EJ$	$1/3Xb/EJ$
AG b	x/b	$1/2Fb-1/2Fx$	$1/2Fx-1/2Fx^2/b$	x^2/b^2		
FH b	0	$-3/2Fx-1/2qx^2$	0	0	0	0
HF b	0	$2Fb-5/2Fx+1/2qx^2$	0	0		
HI b	$1-x/b$	$-1/2Fb+1/2Fx$	$-1/2Fb+Fx-1/2Fx^2/b$	$1-2x/b+x^2/b^2$	$-1/6Fb^2/EJ$	$1/3Xb/EJ$
IH b	$-x/b$	$1/2Fx$	$-1/2Fx^2/b$	x^2/b^2		
HG b	-1	$-3/2Fb+3/2Fx$	$3/2Fb-3/2Fx$	1	$3/4Fb^2/EJ$	Xb/EJ
GH b	1	$3/2Fx$	$3/2Fx$	1		
HG	elongazione asta $N_{1HG}\varepsilon_{HG}L_{HG}$				$-Fb^2/EJ$	
A	molla nodo $-V_{1A}(V_{0A}+XV_{1A})/k_A$				$-3/8Fb^2/EJ$	$1/4Xb/EJ$
	totali				$-17/24Fb^2/EJ$	$23/12Xb/EJ$
	iperstatica $X=W_{GA}$				$17/46Fb$	

Sviluppi di calcolo iperstatica

$L^{XX}_{GA} = \int_o^b (1 - 2\,x/b + x^2/b^2)\ 1/EJ\ dx = [\,x - x^2/b + 1/3\,x^3/b^2\,]_o^b\ 1/EJ$

$= (\,b - b + 1/3\,b\,)\ 1/EJ\ = 1/3\ b/EJ$

$L^{XX}_{AG} = \int_o^b (\,x^2/b^2\,)\ 1/EJ\ dx = [1/3\,x^3/b^2\,]_o^b\ 1/EJ$

$= (1/3\,b\,)\ 1/EJ\ = 1/3\ b/EJ$

$L^{XX}_{HI} = \int_o^b (1 - 2\,x/b + x^2/b^2)\ 1/EJ\ dx = [\,x - x^2/b + 1/3\,x^3/b^2\,]_o^b\ 1/EJ$

$= (\,b - b + 1/3\,b\,)\ 1/EJ\ = 1/3\ b/EJ$

$L^{XX}_{IH} = \int_o^b (\,x^2/b^2\,)\ 1/EJ\ dx = [1/3\,x^3/b^2\,]_o^b\ 1/EJ$

$= (1/3\,b\,)\ 1/EJ\ = 1/3\ b/EJ$

$L^{XX}_{HG} = \int_o^b (1)\ 1/EJ\ dx = [\,x\,]_o^b\ 1/EJ$

$= (\,b\,)\ 1/EJ\ = b/EJ$

$L^{XX}_{GH} = \int_o^b (1)\ 1/EJ\ dx = [\,x\,]_o^b\ 1/EJ$

$= (\,b\,)\ 1/EJ\ = b/EJ$

$L^{Xo}_{GA} = \int_o^b (1/2\,x/b - 1/2\,x^2/b^2)\ Fb\ 1/EJ\ dx = [1/4\,x^2/b - 1/6\,x^3/b^2\,]_o^b\ Fb\ 1/EJ$

$= (1/4\,b - 1/6\,b\,)\ Fb\ 1/EJ\ = 1/12\ Fb^2/EJ$

$L^{Xo}_{AG} = \int_o^b (1/2\,x/b - 1/2\,x^2/b^2)\ Fb\ 1/EJ\ dx = [1/4\,x^2/b - 1/6\,x^3/b^2\,]_o^b\ Fb\ 1/EJ$

$= (1/4\,b - 1/6\,b\,)\ Fb\ 1/EJ\ = 1/12\ Fb^2/EJ$

$L^{Xo}_{HI} = \int_o^b (-1/2 + x/b - 1/2\,x^2/b^2)\ Fb\ 1/EJ\ dx = [-1/2\,x + 1/2\,x^2/b - 1/6\,x^3/b^2\,]_o^b\ Fb\ 1/EJ$

$= (-1/2\,b + 1/2\,b - 1/6\,b\,)\ Fb\ 1/EJ\ = -1/6\ Fb^2/EJ$

$L^{Xo}_{IH} = \int_o^b (-1/2\,x^2/b^2)\ Fb\ 1/EJ\ dx = [-1/6\,x^3/b^2\,]_o^b\ Fb\ 1/EJ$

$= (-1/6\,b\,)\ Fb\ 1/EJ\ = -1/6\ Fb^2/EJ$

$L^{Xo}_{HG} = \int_o^b (3/2 - 3/2\,x/b\,)\ Fb\ 1/EJ\ dx - 1\ \ (-1)\ \ (-1)\ \ Fb^2/EJ$

$= [3/2\,x - 3/4\,x^2/b\,]_o^b\ Fb\ 1/EJ\ - 1\ \ (-1)\ \ (-1)\ \ Fb^2/EJ$

$= (3/2\,b - 3/4\,b\,)\ Fb\ 1/EJ\ - 1\ \ (-1)\ \ (-1)\ \ Fb^2/EJ = -1/4\ \ Fb^2/EJ$

$L^{Xo}_{GH} = \int_o^b (3/2\,x/b\,)\ Fb\ 1/EJ\ dx - 1\ \ (-1)\ \ (-1)\ \ Fb^2/EJ = [3/4\,x^2/b\,]_o^b\ Fb\ 1/EJ\ - 1\ \ (-1)\ \ (-1)\ \ Fb^2/EJ$

$= (3/4\,b\,)\ Fb\ 1/EJ\ - 1\ \ (-1)\ \ (-1)\ \ Fb^2/EJ = -1/4\ \ Fb^2/EJ$

PROCEDIMENTO E RISULTATI 238079 ESΣ05.xxxx.157

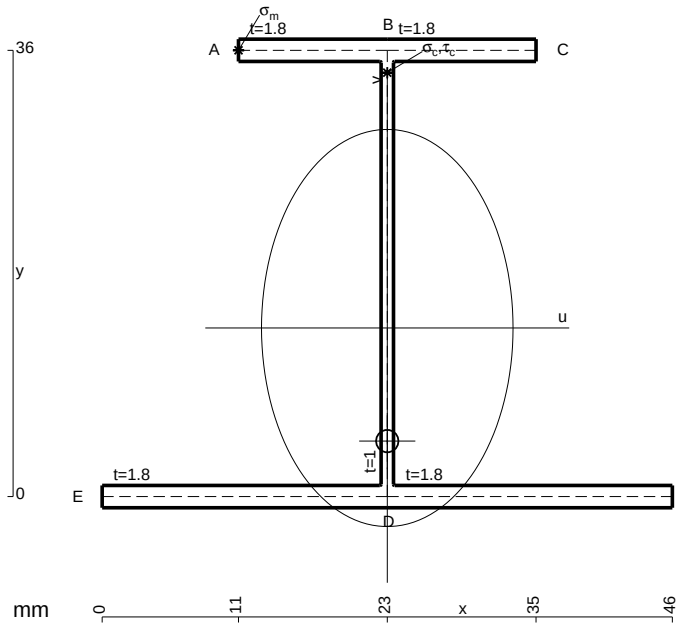

A = 162. mm^2
J_u = 41576. mm^4
J_v = 16674. mm^4
J_t = 148.1 mm^4
y_o = -9.123 mm
y_g = 13.6 mm
T_y = -975. N
M_x = -405600. Nmm
x_m = 11. mm
y_m = 36. mm
u_m = -12. mm
v_m = 22.4 mm
$\sigma_m = -Mv/J_u$ = 218.5 N/mm^2
x_c = 23. mm
y_c = 36. mm
v_c = 22.4 mm
$\sigma_c = -Mv/J_u$ = 218.5 N/mm^2
$\tau_c = TS^*/tJ_u$ = 22.69 N/mm^2
$\tau_g = TS^*/tJ_u$ = 22.69 N/mm^2
t_c = 390. mm
$\sigma_o = \sqrt{\sigma^2 + 3\tau^2}$ = 222. N/mm^2

@ Adolfo Zavelani Rossi, Politecnico di Milano, vers.27.03.13 01.12.25

ESΣ05.xxxx.157

@ Adolfo Zavelani Rossi, Politecnico di Milano, vers.27.03.13 01.12.25

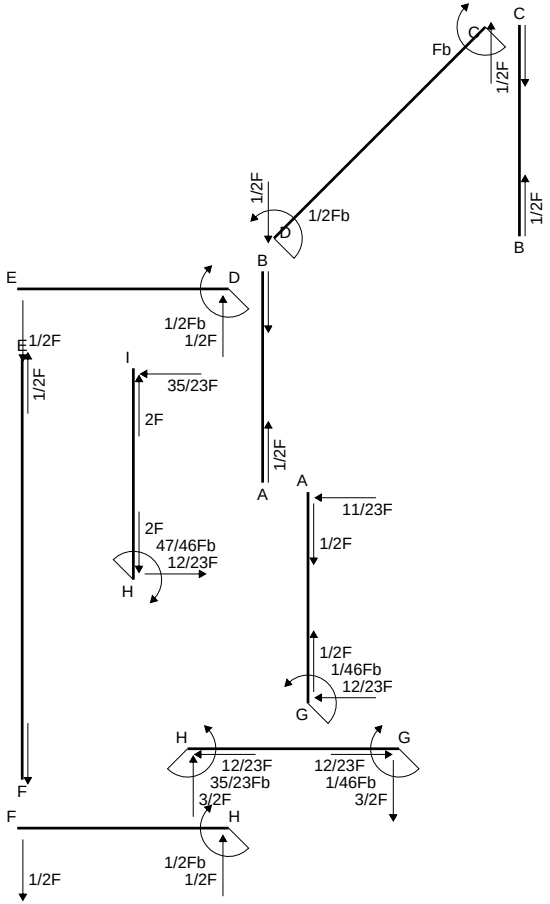
C
Fb
C
1/2F
1/2F
1/2Fb
D
1/2F
B
E
D
B
1/2Fb
1/2F
F
1/2F
I
35/23F
2F
1/2F
A
2F
47/46Fb
12/23F
H
A
11/23F
1/2F
1/2F
1/46Fb
12/23F
G
H
G
12/23F
35/23Fb
3/2F
12/23F
1/46Fb
3/2F
F
H
1/2Fb
1/2F
1/2F

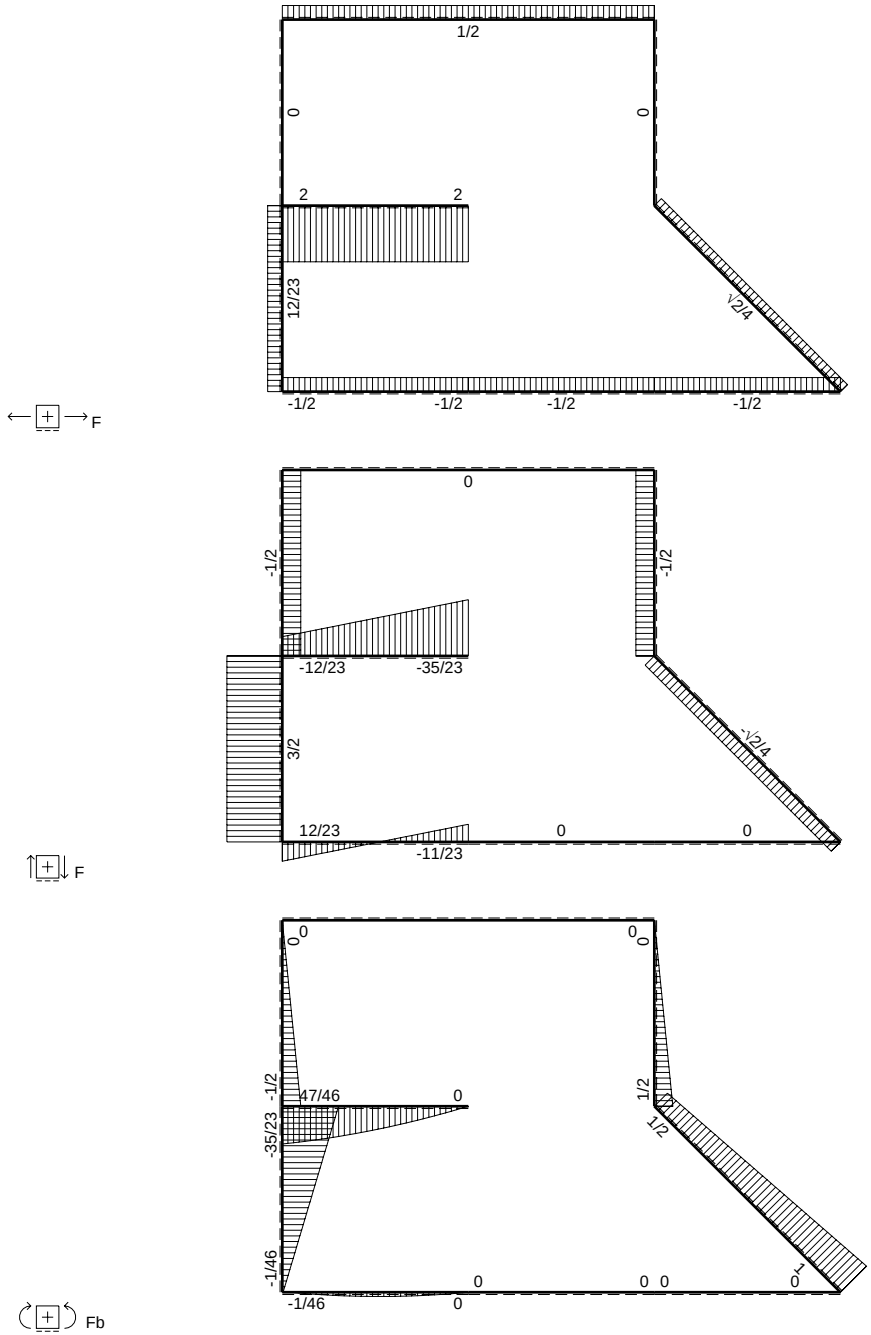
F
1/2
0
0
2
2
12/23
√2/4
-1/2
-1/2
-1/2
-1/2
F
0
-1/2
-1/2
-12/23
-35/23
3/2
√2/4
12/23
0
0
-11/23
Fb
0
0
0
0
-1/2
47/46
0
1/2
1/2
-35/23
-1/46
0
0 0
0
-1/46
0

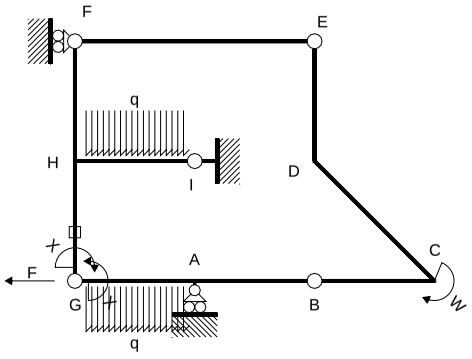

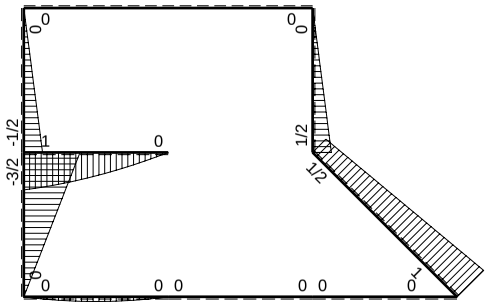

M_0 flessione da carichi assegnati

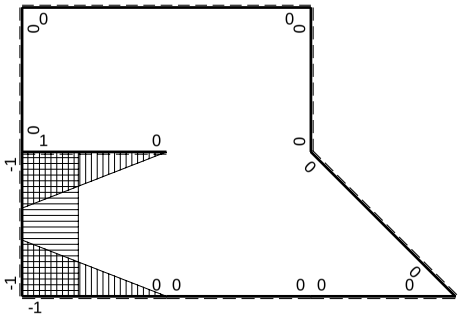

M_x flessione da iperstatica X=1

Quadro contributi PLV per iperstatica $X=W_{GA}$

→	$M_x(x)$	$M_0(x)$	M_xM_0	M_xM_x	$\int M_xM_0/EJdx$	$\int XM_xM_x/EJdx$
AB b	0	0	0	0	0	0
BA b	0	0	0	0		
BC b	0	0	0	0	0	0
CB b	0	0	0	0		
CD $\sqrt{2}$b	0	Fb-$\sqrt{2}$/4Fx	0	0	0	0
DE b	0	1/2Fb-1/2Fx	0	0	0	0
ED b	0	-1/2Fx	0	0		
EF 2b	0	0	0	0	0	0
FE 2b	0	0	0	0		
GA b	-1+x/b	1/2Fx-1/2qx^2	-1/2Fx+Fx^2/b-1/2qx^3/b	1-2x/b+x^2/b^2	-1/24Fb^2/EJ	1/3Xb/EJ
AG b	x/b	-1/2Fx+1/2qx^2	-1/2Fx^2/b+1/2qx^3/b	x^2/b^2		
FH b	0	-1/2Fx	0	0	0	0
HF b	0	1/2Fb-1/2Fx	0	0		
HI b	1-x/b	Fb-1/2Fx-1/2qx^2	Fb-3/2Fx+1/2qx^3/b	1-2x/b+x^2/b^2	3/8Fb^2/EJ	1/3Xb/EJ
IH b	-x/b	-3/2Fx+1/2qx^2	3/2Fx^2/b-1/2qx^3/b	x^2/b^2		
HG b	-1	-3/2Fb+3/2Fx	3/2Fb-3/2Fx	1	3/4Fb^2/EJ	Xb/EJ
GH b	1	3/2Fx	3/2Fx	1		
HG	elongazione asta $N_{1HG}\varepsilon_{HG}L_{HG}$				-Fb^2/EJ	
A	molla nodo $-V_{1A}(V_{0A}+XV_{1A})/k_A$				-1/8Fb^2/EJ	1/4Xb/EJ
	totali				-1/24Fb^2/EJ	23/12Xb/EJ
	iperstatica $X=W_{GA}$				1/46Fb	

Sviluppi di calcolo iperstatica

$L^{XX}_{GA} = \int_o^b (1 - 2\,x/b + x^2/b^2)\ 1/EJ\ dx = [\,x - x^2/b + 1/3\,x^3/b^2\,]_o^b\ 1/EJ$

$= (\,b - b + 1/3\,b\,)\ 1/EJ = 1/3\ b/EJ$

$L^{XX}_{AG} = \int_o^b (\,x^2/b^2\,)\ 1/EJ\ dx = [1/3\,x^3/b^2\,]_o^b\ 1/EJ$

$= (1/3\,b)\ 1/EJ = 1/3\ b/EJ$

$L^{XX}_{HI} = \int_o^b (1 - 2\,x/b + x^2/b^2)\ 1/EJ\ dx = [\,x - x^2/b + 1/3\,x^3/b^2\,]_o^b\ 1/EJ$

$= (\,b - b + 1/3\,b\,)\ 1/EJ = 1/3\ b/EJ$

$L^{XX}_{IH} = \int_o^b (\,x^2/b^2\,)\ 1/EJ\ dx = [1/3\,x^3/b^2\,]_o^b\ 1/EJ$

$= (1/3\,b)\ 1/EJ = 1/3\ b/EJ$

$L^{XX}_{HG} = \int_o^b (1)\ 1/EJ\ dx = [\,x\,]_o^b\ 1/EJ$

$= (\,b\,)\ 1/EJ = b/EJ$

$L^{XX}_{GH} = \int_o^b (1)\ 1/EJ\ dx = [\,x\,]_o^b\ 1/EJ$

$= (\,b\,)\ 1/EJ = b/EJ$

$L^{Xo}_{GA} = \int_o^b (-1/2\,x/b + x^2/b^2 - 1/2\,x^3/b^3)\ Fb\ 1/EJ\ dx = [-1/4\,x^2/b + 1/3\,x^3/b^2 - 1/8\,x^4/b^3\,]_o^b\ Fb\ 1/EJ$

$= (-1/4\,b + 1/3\,b - 1/8\,b)\ Fb\ 1/EJ = -1/24\ Fb^2/EJ$

$L^{Xo}_{AG} = \int_o^b (-1/2\,x^2/b^2 + 1/2\,x^3/b^3)\ Fb\ 1/EJ\ dx = [-1/6\,x^3/b^2 + 1/8\,x^4/b^3\,]_o^b\ Fb\ 1/EJ$

$= (-1/6\,b + 1/8\,b)\ Fb\ 1/EJ = -1/24\ Fb^2/EJ$

$L^{Xo}_{HI} = \int_o^b (1 - 3/2\,x/b + 1/2\,x^3/b^3)\ Fb\ 1/EJ\ dx = [\,x - 3/4\,x^2/b + 1/8\,x^4/b^3\,]_o^b\ Fb\ 1/EJ$

$= (\,b - 3/4\,b + 1/8\,b)\ Fb\ 1/EJ = 3/8\ Fb^2/EJ$

$L^{Xo}_{IH} = \int_o^b (3/2\,x^2/b^2 - 1/2\,x^3/b^3)\ Fb\ 1/EJ\ dx = [1/2\,x^3/b^2 - 1/8\,x^4/b^3\,]_o^b\ Fb\ 1/EJ$

$= (1/2\,b - 1/8\,b)\ Fb\ 1/EJ = 3/8\ Fb^2/EJ$

$L^{Xo}_{HG} = \int_o^b (3/2 - 3/2\,x/b)\ Fb\ 1/EJ\ dx - 1\ \ (-1)\ \ (-1)\ \ Fb^2/EJ$

$= [3/2\,x - 3/4\,x^2/b\,]_o^b\ Fb\ 1/EJ\ - 1\ \ (-1)\ \ (-1)\ \ Fb^2/EJ$

$= (3/2\,b - 3/4\,b)\ Fb\ 1/EJ\ - 1\ \ (-1)\ \ (-1)\ \ Fb^2/EJ = -1/4\ \ Fb^2/EJ$

$L^{Xo}_{GH} = \int_o^b (3/2\,x/b)\ Fb\ 1/EJ\ dx - 1\ \ (-1)\ \ (-1)\ \ Fb^2/EJ = [3/4\,x^2/b\,]_o^b\ Fb\ 1/EJ\ - 1\ \ (-1)\ \ (-1)\ \ Fb^2/EJ$

$= (3/4\,b)\ Fb\ 1/EJ\ - 1\ \ (-1)\ \ (-1)\ \ Fb^2/EJ = -1/4\ \ Fb^2/EJ$

PROCEDIMENTO E RISULTATI 237078 ESΣ05.xxxx.158

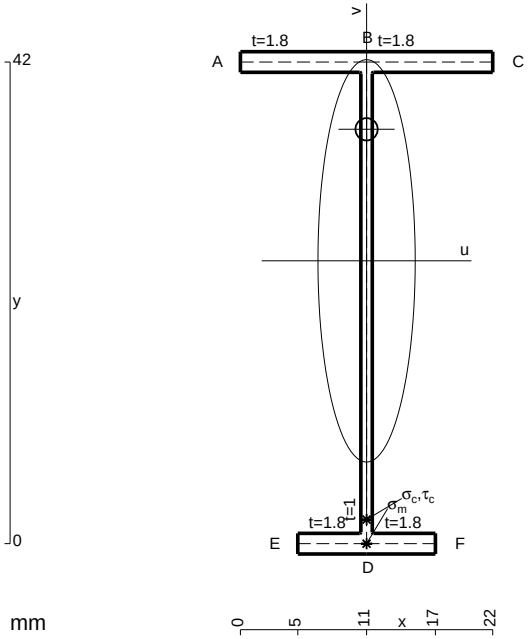

A = 103.2 mm^2
J_u = 31779. mm^4
J_v = 1856. mm^4
J_t = 80.1 mm^4
y_o = 11.47 mm
y_g = 24.66 mm
N = 159.1 N
T_y = -159.1 N
M_x = 288000. Nmm
x_m = 11. mm
v_m = -24.66 mm
$\sigma_m = N/A - Mv/J_u$ = 225.1 N/mm^2
y_c = 3. mm
u_c = -11. mm
v_c = -21.66 mm
$\sigma_c = N/A - Mv/J_u$ = 225.1 N/mm^2
$\tau_c = TS^*/tJ_u$ = 2.667 N/mm^2
$\tau_g = TS^*/tJ_u$ = 2.667 N/mm^2
t_c = 450. mm
$\sigma_o = \sqrt{\sigma^2 + 3\tau^2}$ = 225.1 N/mm^2

@ Adolfo Zavelani Rossi, Politecnico di Milano, vers.27.03.13 01.12.25

ESΣ05.xxxx.158

@ Adolfo Zavelani Rossi, Politecnico di Milano, vers.27.03.13 01.12.25

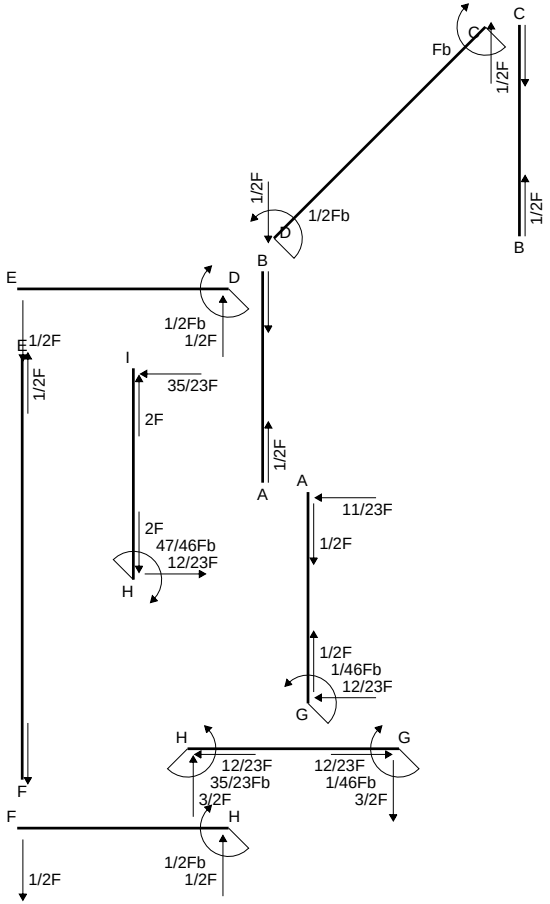
C
Fb
C
1/2F
1/2F
1/2Fb
D
1/2F
B
E
D
B
1/2Fb
1/2F
E
1/2F
1/2F
I
35/23F
2F
1/2F
A
A
11/23F
2F
47/46Fb
12/23F
1/2F
H
1/2F
1/46Fb
12/23F
G
H
G
12/23F
35/23Fb
3/2F
12/23F
1/46Fb
3/2F
F
H
F
1/2Fb
1/2F
1/2F

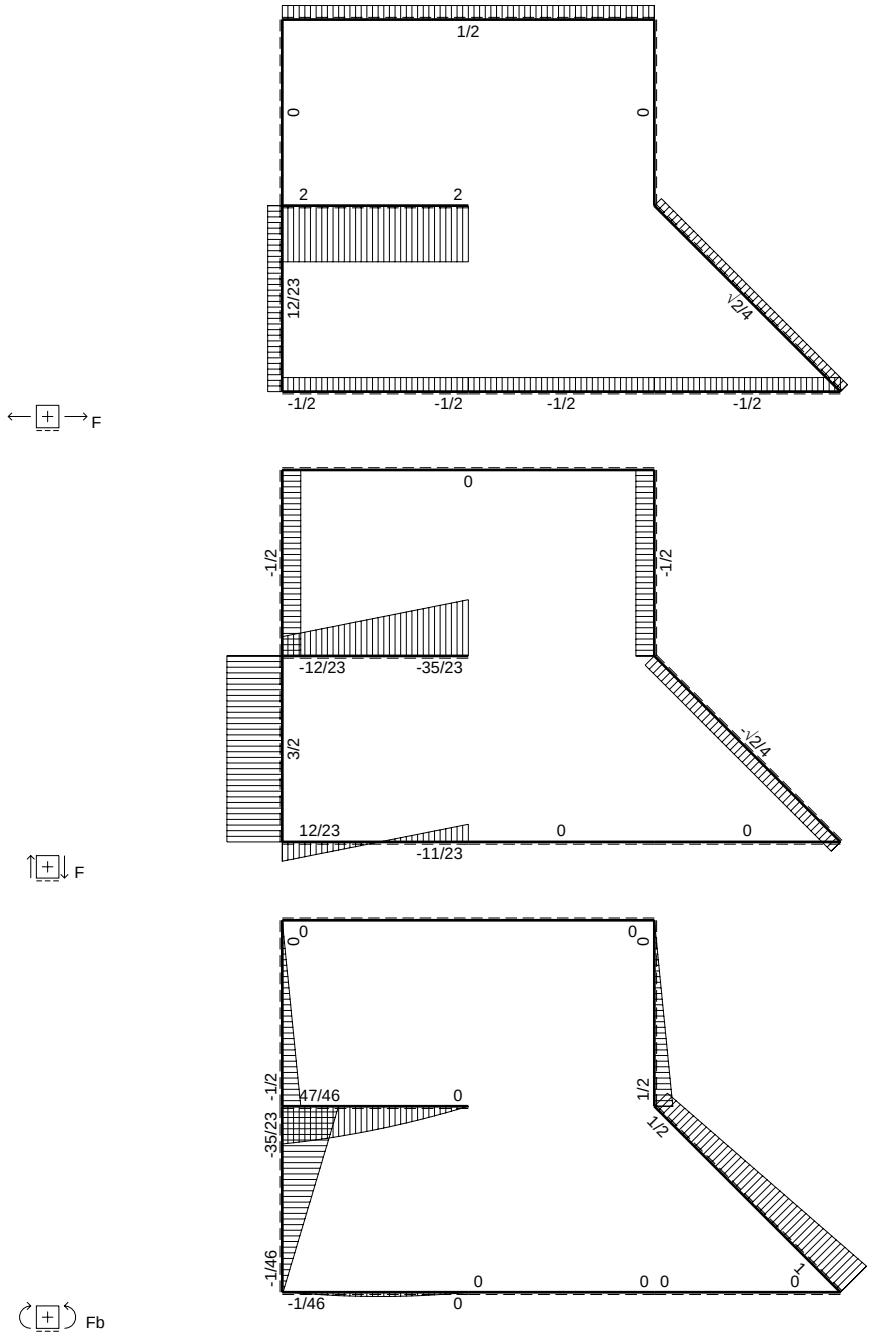
F
1/2
0
0
2
2
12/23
1/2
-1/2
-1/2
-1/2
-1/2
F
0
-1/2
-1/2
-12/23
-35/23
3/2
-1/2
12/23
0
0
-11/23
Fb
0
0
0
0
-1/2
47/46
0
1/2
1/2
-35/23
-1/46
0
0 0
0
-1/46
0

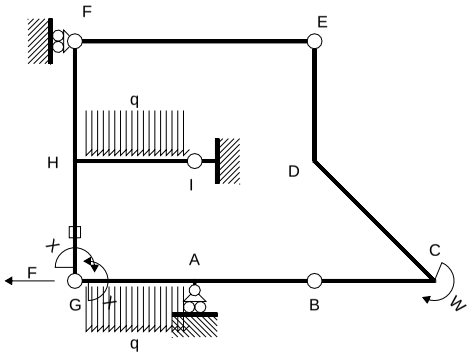

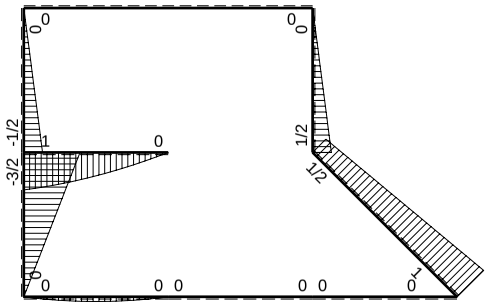

M_0 flessione da carichi assegnati

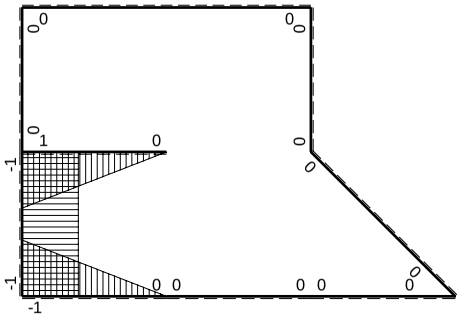

M_x flessione da iperstatica X=1

Quadro contributi PLV per iperstatica $X=W_{GA}$

→	$M_x(x)$	$M_0(x)$	M_xM_0	M_xM_x	$\int M_xM_0/EJdx$	$\int XM_xM_x/EJdx$
AB b	0	0	0	0	0	0
BA b	0	0	0	0		
BC b	0	0	0	0	0	0
CB b	0	0	0	0		
CD √2b	0	Fb-√2/4Fx	0	0	0	0
DE b	0	1/2Fb-1/2Fx	0	0	0	0
ED b	0	-1/2Fx	0	0		
EF 2b	0	0	0	0	0	0
FE 2b	0	0	0	0		
GA b	-1+x/b	$1/2Fx-1/2qx^2$	$-1/2Fx+Fx^2/b-1/2qx^3/b$	$1-2x/b+x^2/b^2$	$-1/24Fb^2/EJ$	$1/3Xb/EJ$
AG b	x/b	$-1/2Fx+1/2qx^2$	$-1/2Fx^2/b+1/2qx^3/b$	x^2/b^2		
FH b	0	-1/2Fx	0	0	0	0
HF b	0	1/2Fb-1/2Fx	0	0		
HI b	1-x/b	$Fb-1/2Fx-1/2qx^2$	$Fb-3/2Fx+1/2qx^3/b$	$1-2x/b+x^2/b^2$	$3/8Fb^2/EJ$	$1/3Xb/EJ$
IH b	-x/b	$-3/2Fx+1/2qx^2$	$3/2Fx^2/b-1/2qx^3/b$	x^2/b^2		
HG b	-1	-3/2Fb+3/2Fx	3/2Fb-3/2Fx	1	$3/4Fb^2/EJ$	Xb/EJ
GH b	1	3/2Fx	3/2Fx	1		
HG	elongazione asta $N_{1HG}\varepsilon_{HG}L_{HG}$				$-Fb^2/EJ$	
A	molla nodo $-V_{1A}(V_{0A}+XV_{1A})/k_A$				$-1/8Fb^2/EJ$	$1/4Xb/EJ$
	totali				$-1/24Fb^2/EJ$	$23/12Xb/EJ$
	iperstatica $X=W_{GA}$				1/46Fb	

Sviluppi di calcolo iperstatica

$L^{XX}_{GA} = \int_o^b (1 - 2\,x/b + x^2/b^2)\ 1/EJ\ dx = [\,x - x^2/b + 1/3\,x^3/b^2\,]_o^b\ 1/EJ$

$= (\,b - b + 1/3\,b\,)\ 1/EJ = 1/3\ b/EJ$

$L^{XX}_{AG} = \int_o^b (\,x^2/b^2\,)\ 1/EJ\ dx = [1/3\,x^3/b^2\,]_o^b\ 1/EJ$

$= (1/3\,b\,)\ 1/EJ = 1/3\ b/EJ$

$L^{XX}_{HI} = \int_o^b (1 - 2\,x/b + x^2/b^2)\ 1/EJ\ dx = [\,x - x^2/b + 1/3\,x^3/b^2\,]_o^b\ 1/EJ$

$= (\,b - b + 1/3\,b\,)\ 1/EJ = 1/3\ b/EJ$

$L^{XX}_{IH} = \int_o^b (\,x^2/b^2\,)\ 1/EJ\ dx = [1/3\,x^3/b^2\,]_o^b\ 1/EJ$

$= (1/3\,b\,)\ 1/EJ = 1/3\ b/EJ$

$L^{XX}_{HG} = \int_o^b (1)\ 1/EJ\ dx = [\,x\,]_o^b\ 1/EJ$

$= (\,b\,)\ 1/EJ = b/EJ$

$L^{XX}_{GH} = \int_o^b (1)\ 1/EJ\ dx = [\,x\,]_o^b\ 1/EJ$

$= (\,b\,)\ 1/EJ = b/EJ$

$L^{Xo}_{GA} = \int_o^b (-1/2\,x/b + x^2/b^2 - 1/2\,x^3/b^3)\ Fb\ 1/EJ\ dx = [-1/4\,x^2/b + 1/3\,x^3/b^2 - 1/8\,x^4/b^3\,]_o^b\ Fb\ 1/EJ$

$= (-1/4\,b + 1/3\,b - 1/8\,b\,)\ Fb\ 1/EJ = -1/24\ Fb^2/EJ$

$L^{Xo}_{AG} = \int_o^b (-1/2\,x^2/b^2 + 1/2\,x^3/b^3)\ Fb\ 1/EJ\ dx = [-1/6\,x^3/b^2 + 1/8\,x^4/b^3\,]_o^b\ Fb\ 1/EJ$

$= (-1/6\,b + 1/8\,b\,)\ Fb\ 1/EJ = -1/24\ Fb^2/EJ$

$L^{Xo}_{HI} = \int_o^b (1 - 3/2\,x/b + 1/2\,x^3/b^3)\ Fb\ 1/EJ\ dx = [\,x - 3/4\,x^2/b + 1/8\,x^4/b^3\,]_o^b\ Fb\ 1/EJ$

$= (\,b - 3/4\,b + 1/8\,b\,)\ Fb\ 1/EJ = 3/8\ Fb^2/EJ$

$L^{Xo}_{IH} = \int_o^b (3/2\,x^2/b^2 - 1/2\,x^3/b^3)\ Fb\ 1/EJ\ dx = [1/2\,x^3/b^2 - 1/8\,x^4/b^3\,]_o^b\ Fb\ 1/EJ$

$= (1/2\,b - 1/8\,b\,)\ Fb\ 1/EJ = 3/8\ Fb^2/EJ$

$L^{Xo}_{HG} = \int_o^b (3/2 - 3/2\,x/b\,)\ Fb\ 1/EJ\ dx - 1\ \ (-1)\ \ (-1)\ \ Fb^2/EJ$

$= [3/2\,x - 3/4\,x^2/b\,]_o^b\ Fb\ 1/EJ\ - 1\ \ (-1)\ \ (-1)\ \ Fb^2/EJ$

$= (3/2\,b - 3/4\,b\,)\ Fb\ 1/EJ\ - 1\ \ (-1)\ \ (-1)\ \ Fb^2/EJ = -1/4\ \ Fb^2/EJ$

$L^{Xo}_{GH} = \int_o^b (3/2\,x/b\,)\ Fb\ 1/EJ\ dx - 1\ \ (-1)\ \ (-1)\ \ Fb^2/EJ = [3/4\,x^2/b\,]_o^b\ Fb\ 1/EJ\ - 1\ \ (-1)\ \ (-1)\ \ Fb^2/EJ$

$= (3/4\,b\,)\ Fb\ 1/EJ\ - 1\ \ (-1)\ \ (-1)\ \ Fb^2/EJ = -1/4\ \ Fb^2/EJ$

PROCEDIMENTO E RISULTATI 982585 ESΣ05.xxxx.159

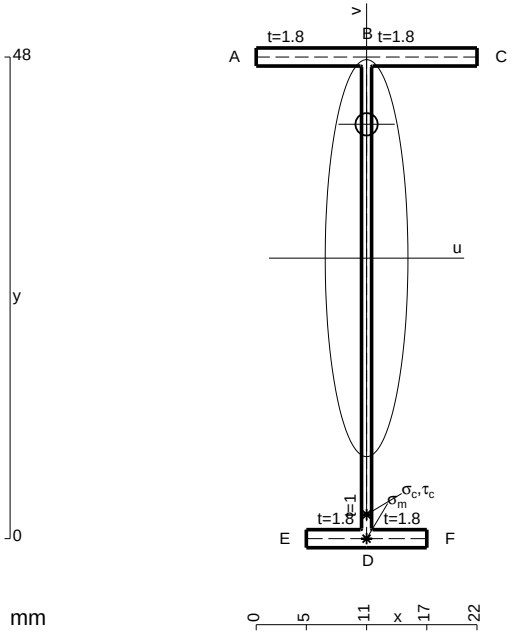

A = 109.2 mm^2
J_u = 42758. mm^4
J_v = 1856. mm^4
J_t = 82.1 mm^4
y_o = 13.34 mm
y_g = 27.96 mm
N = 166.2 N
T_y = -166.2 N
M_x = 361900. Nmm
x_m = 11. mm
v_m = -27.96 mm
$\sigma_m = N/A - Mv/J_u$ = 238.1 N/mm^2
y_c = 3. mm
u_c = -11. mm
v_c = -24.96 mm
$\sigma_c = N/A - Mv/J_u$ = 238.1 N/mm^2
$\tau_c = TS^*/tJ_u$ = 2.347 N/mm^2
$\tau_g = TS^*/tJ_u$ = 2.347 N/mm^2
t_c = 470. mm
$\sigma_o = \sqrt{\sigma^2 + 3\tau^2}$ = 238.2 N/mm^2

@ Adolfo Zavelani Rossi, Politecnico di Milano, vers.27.03.13 01.12.25

ESΣ05.xxxx.159

@ Adolfo Zavelani Rossi, Politecnico di Milano, vers.27.03.13 01.12.25

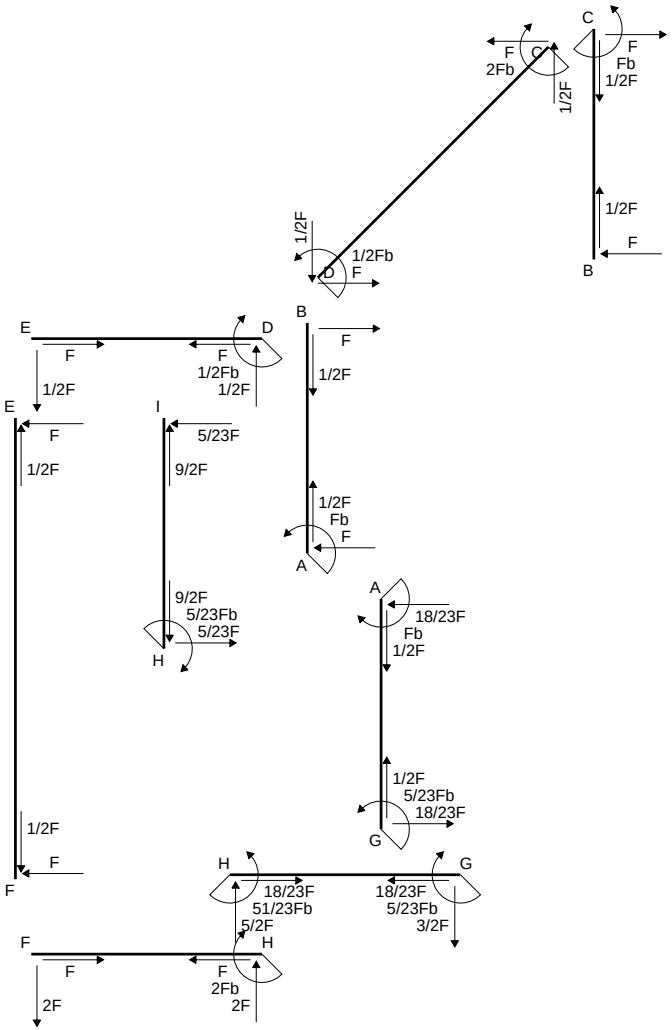
C
F
2Fb
C
1/2F
F
Fb
1/2F
1/2F
1/2F
F
B
1/2F
1/2Fb
D
F
B
E
D
F
F
1/2Fb
1/2F
1/2F
E
F
1/2F
I
5/23F
9/2F
B
F
1/2F
1/2F
Fb
F
A
9/2F
5/23Fb
5/23F
H
A
18/23F
Fb
1/2F
1/2F
5/23Fb
18/23F
G
1/2F
F
F
H
18/23F
51/23Fb
5/2F
H
G
18/23F
5/23Fb
3/2F
F
F
2Fb
2F
F
2F

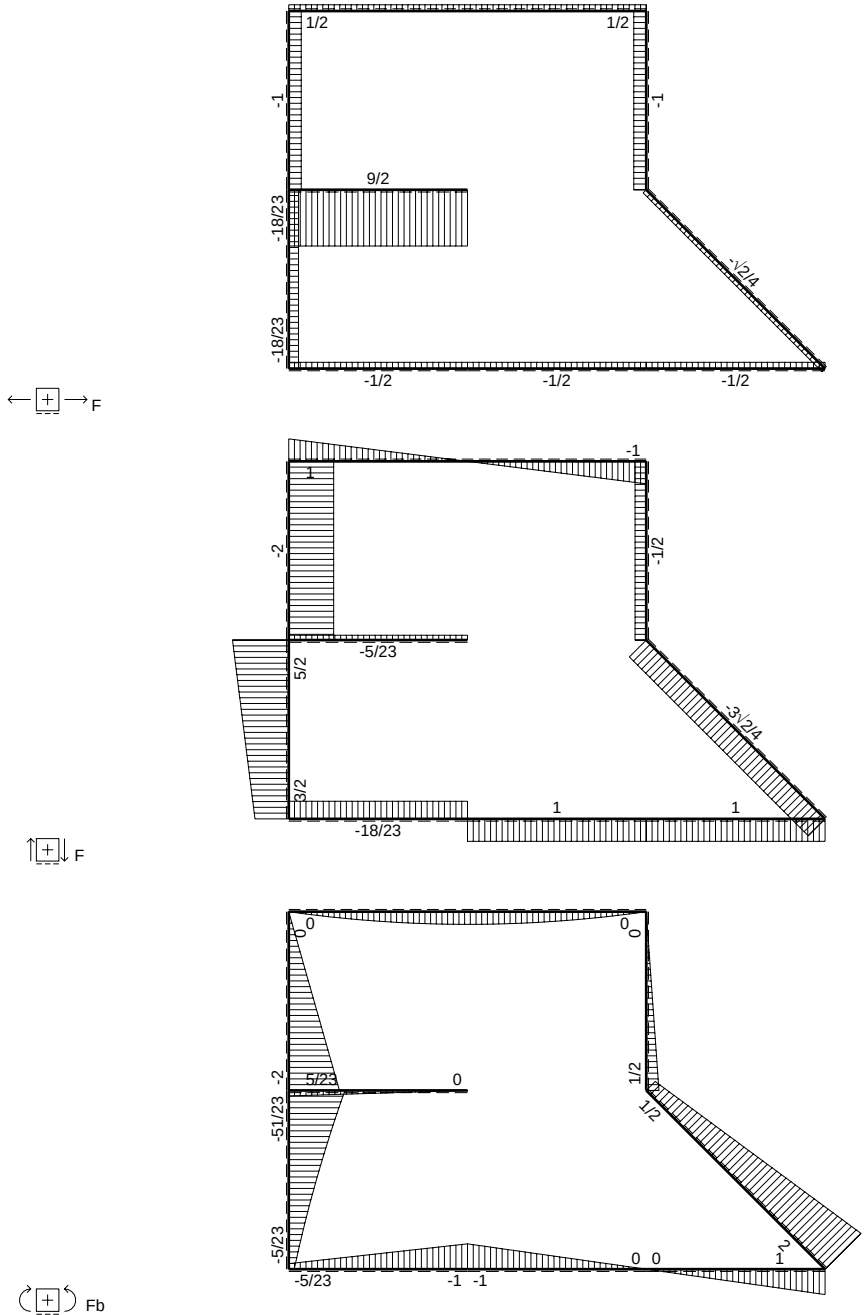
F
1/2
1/2
-1
-1
9/2
-18/23
-18/23
-√2/4
-1/2
-1/2
-1/2
F
-1
1
-2
-1/2
-5/23
5/2
-3√2/4
3/2
1
1
-18/23
F
0
0
0
0
-2
5/23
0
1/2
1/2
-51/23
-5/23
0 0
1
-5/23
-1 -1
Fb

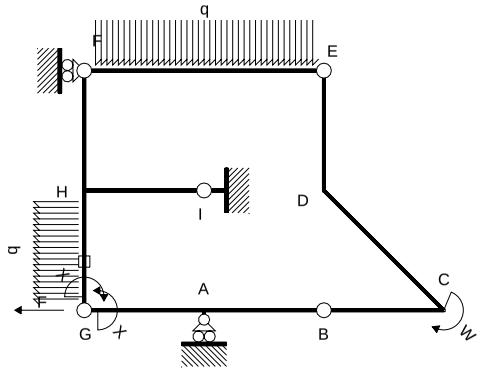

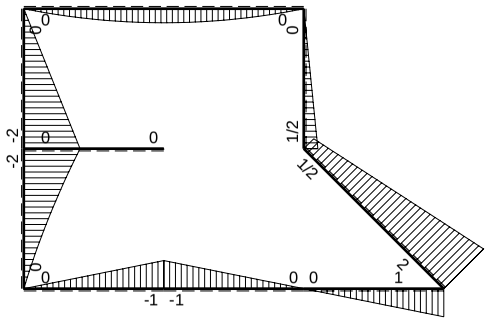

M_0 flessione da carichi assegnati

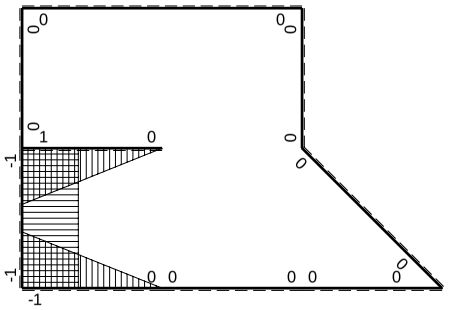

M_x flessione da iperstatica X=1

Quadro contributi PLV per iperstatica $X=W_{GA}$

→	$M_x(x)$	$M_0(x)$	M_xM_0	M_xM_x	$\int M_xM_0/EJdx$	$\int XM_xM_x/EJdx$
AB b	0	-Fb+Fx	0	0	0	0
BA b	0	Fx	0	0		
BC b	0	Fx	0	0	0	0
CB b	0	-Fb+Fx	0	0		
CD √2b	0	2Fb-3√2/4Fx	0	0	0	0
DE b	0	1/2Fb-1/2Fx	0	0	0	0
ED b	0	-1/2Fx	0	0		
EF 2b	0	$-Fx+1/2qx^2$	0	0	0	0
FE 2b	0	$Fx-1/2qx^2$	0	0		
GA b	-1+x/b	-Fx	$Fx-Fx^2/b$	$1-2x/b+x^2/b^2$	$1/6Fb^2/EJ$	1/3Xb/EJ
AG b	x/b	Fb-Fx	$Fx-Fx^2/b$	x^2/b^2		
FH b	0	-2Fx	0	0	0	0
HF b	0	2Fb-2Fx	0	0		
HI b	1-x/b	0	0	$1-2x/b+x^2/b^2$	0	1/3Xb/EJ
IH b	-x/b	0	0	x^2/b^2		
HG b	-1	$-2Fb+5/2Fx-1/2qx^2$	$2Fb-5/2Fx+1/2Fx^2/b$	1	$11/12Fb^2/EJ$	Xb/EJ
GH b	1	$3/2Fx+1/2qx^2$	$3/2Fx+1/2Fx^2/b$	1		
HG	elongazione asta $N_{1HG}\varepsilon_{HG}L_{HG}$				$-Fb^2/EJ$	
A	molla nodo $-V_{1A}(V_{0A}+XV_{1A})/k_A$				$-1/2Fb^2/EJ$	1/4Xb/EJ
	totali				$-5/12Fb^2/EJ$	23/12Xb/EJ
	iperstatica $X=W_{GA}$				5/23Fb	

Sviluppi di calcolo iperstatica

$L^{XX}_{GA} = \int_o^b (1 - 2\,x/b + x^2/b^2)\ 1/EJ\ dx = [\,x - x^2/b + 1/3\,x^3/b^2\,]_o^b\ 1/EJ$

$= (\,b - b + 1/3\,b\,)\ 1/EJ = 1/3\ b/EJ$

$L^{XX}_{AG} = \int_o^b (\,x^2/b^2\,)\ 1/EJ\ dx = [1/3\,x^3/b^2\,]_o^b\ 1/EJ$

$= (1/3\,b\,)\ 1/EJ = 1/3\ b/EJ$

$L^{XX}_{HI} = \int_o^b (1 - 2\,x/b + x^2/b^2)\ 1/EJ\ dx = [\,x - x^2/b + 1/3\,x^3/b^2\,]_o^b\ 1/EJ$

$= (\,b - b + 1/3\,b\,)\ 1/EJ = 1/3\ b/EJ$

$L^{XX}_{IH} = \int_o^b (\,x^2/b^2\,)\ 1/EJ\ dx = [1/3\,x^3/b^2\,]_o^b\ 1/EJ$

$= (1/3\,b\,)\ 1/EJ = 1/3\ b/EJ$

$L^{XX}_{HG} = \int_o^b (1)\ 1/EJ\ dx = [\,x\,]_o^b\ 1/EJ$

$= (\,b\,)\ 1/EJ = b/EJ$

$L^{XX}_{GH} = \int_o^b (1)\ 1/EJ\ dx = [\,x\,]_o^b\ 1/EJ$

$= (\,b\,)\ 1/EJ = b/EJ$

$L^{Xo}_{GA} = \int_o^b (\,x/b - x^2/b^2\,)\ Fb\ 1/EJ\ dx = [1/2\,x^2/b - 1/3\,x^3/b^2\,]_o^b\ Fb\ 1/EJ$

$= (1/2\,b - 1/3\,b\,)\ Fb\ 1/EJ = 1/6\ Fb^2/EJ$

$L^{Xo}_{AG} = \int_o^b (\,x/b - x^2/b^2\,)\ Fb\ 1/EJ\ dx = [1/2\,x^2/b - 1/3\,x^3/b^2\,]_o^b\ Fb\ 1/EJ$

$= (1/2\,b - 1/3\,b\,)\ Fb\ 1/EJ = 1/6\ Fb^2/EJ$

$L^{Xo}_{HG} = \int_o^b (2 - 5/2\,x/b + 1/2\,x^2/b^2\,)\ Fb\ 1/EJ\ dx - 1\ \ (-1)\ \ (-1)\ \ Fb^2/EJ$

$= [\,2\,x - 5/4\,x^2/b + 1/6\,x^3/b^2\,]_o^b\ Fb\ 1/EJ\ \ - 1\ \ (-1)\ \ (-1)\ \ Fb^2/EJ$

$= (\,2\,b - 5/4\,b + 1/6\,b\,)\ Fb\ 1/EJ\ \ - 1\ \ (-1)\ \ (-1)\ \ Fb^2/EJ = -1/12\ \ Fb^2/EJ$

$L^{Xo}_{GH} = \int_o^b (3/2\,x/b + 1/2\,x^2/b^2\,)\ Fb\ 1/EJ\ dx - 1\ \ (-1)\ \ (-1)\ \ Fb^2/EJ$

$= [\,3/4\,x^2/b + 1/6\,x^3/b^2\,]_o^b\ Fb\ 1/EJ\ \ - 1\ \ (-1)\ \ (-1)\ \ Fb^2/EJ$

$= (\,3/4\,b + 1/6\,b\,)\ Fb\ 1/EJ\ \ - 1\ \ (-1)\ \ (-1)\ \ Fb^2/EJ = -1/12\ \ Fb^2/EJ$

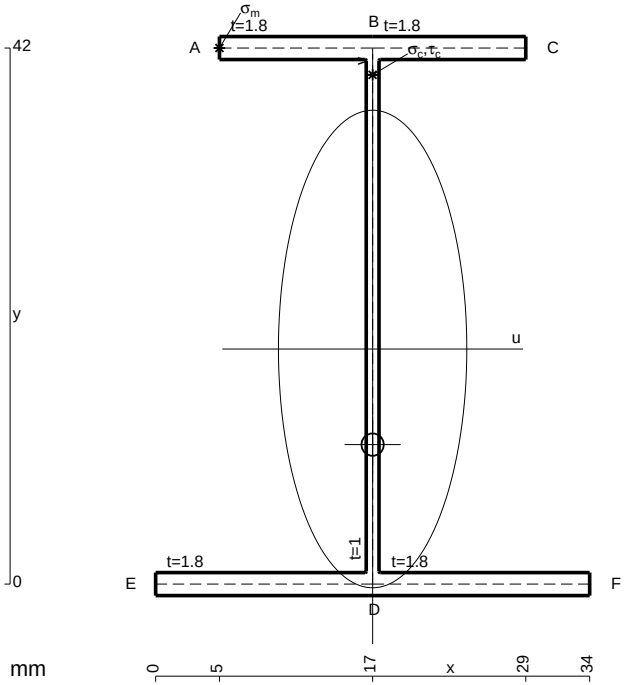

A = 146.4 mm^2
J_u = 51238. mm^4
J_v = 7969. mm^4
J_t = 126.8 mm^4
y_o = -7.49 mm
y_g = 18.42 mm
N = -610. N
T_y = -1220. N
M_x = -439200. Nmm
x_m = 5. mm
y_m = 42. mm
u_m = -12. mm
v_m = 23.58 mm
$\sigma_m = N/A - Mv/J_u$ = 198. N/mm^2
x_c = 17. mm
y_c = 42. mm
v_c = 23.58 mm
$\sigma_c = N/A - Mv/J_u$ = 198. N/mm^2
$\tau_c = TS^*/tJ_u$ = 24.26 N/mm^2
$\tau_g = TS^*/tJ_u$ = 24.26 N/mm^2
t_c = 610. mm
$\sigma_o = \sqrt{\sigma^2 + 3\tau^2}$ = 202.4 N/mm^2

ESΣ05.xxxx.160

@ Adolfo Zavelani Rossi, Politecnico di Milano, vers.27.03.13 01.12.25

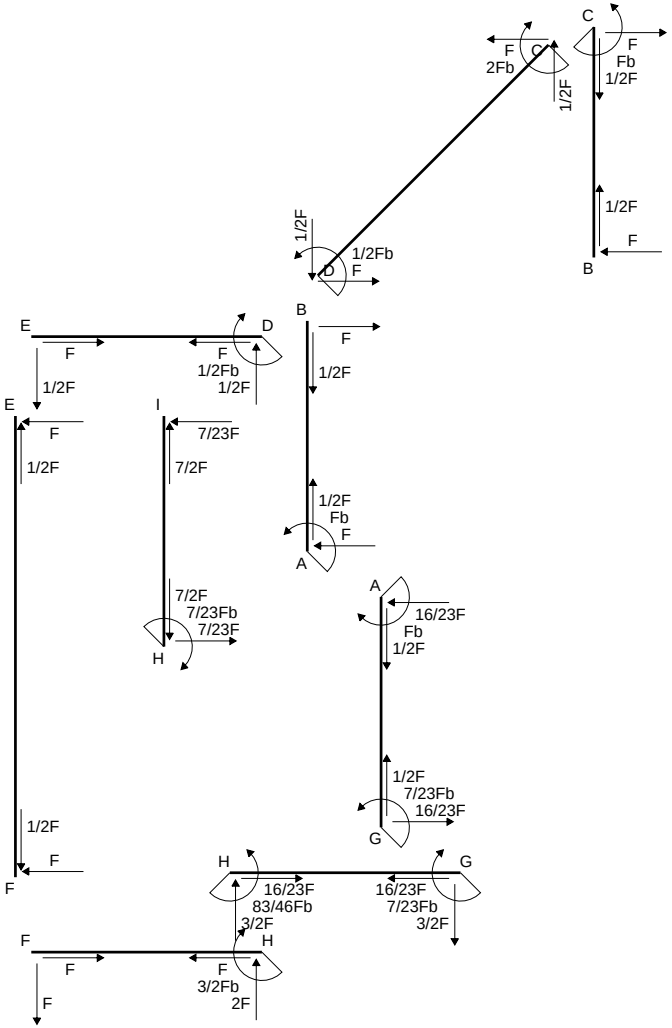
C
F
Fb
1/2F
F
2Fb
C
1/2F
1/2F
F
B
1/2F
1/2Fb
F
D
E
F
D
F
1/2Fb
1/2F
B
F
1/2F
E
F
1/2F
I
7/23F
7/2F
1/2F
Fb
F
A
7/2F
7/23Fb
7/23F
H
A
16/23F
Fb
1/2F
1/2F
7/23Fb
16/23F
G
1/2F
F
F
H
16/23F
83/46Fb
3/2F
H
G
16/23F
7/23Fb
3/2F
F
F
F
F
3/2Fb
2F

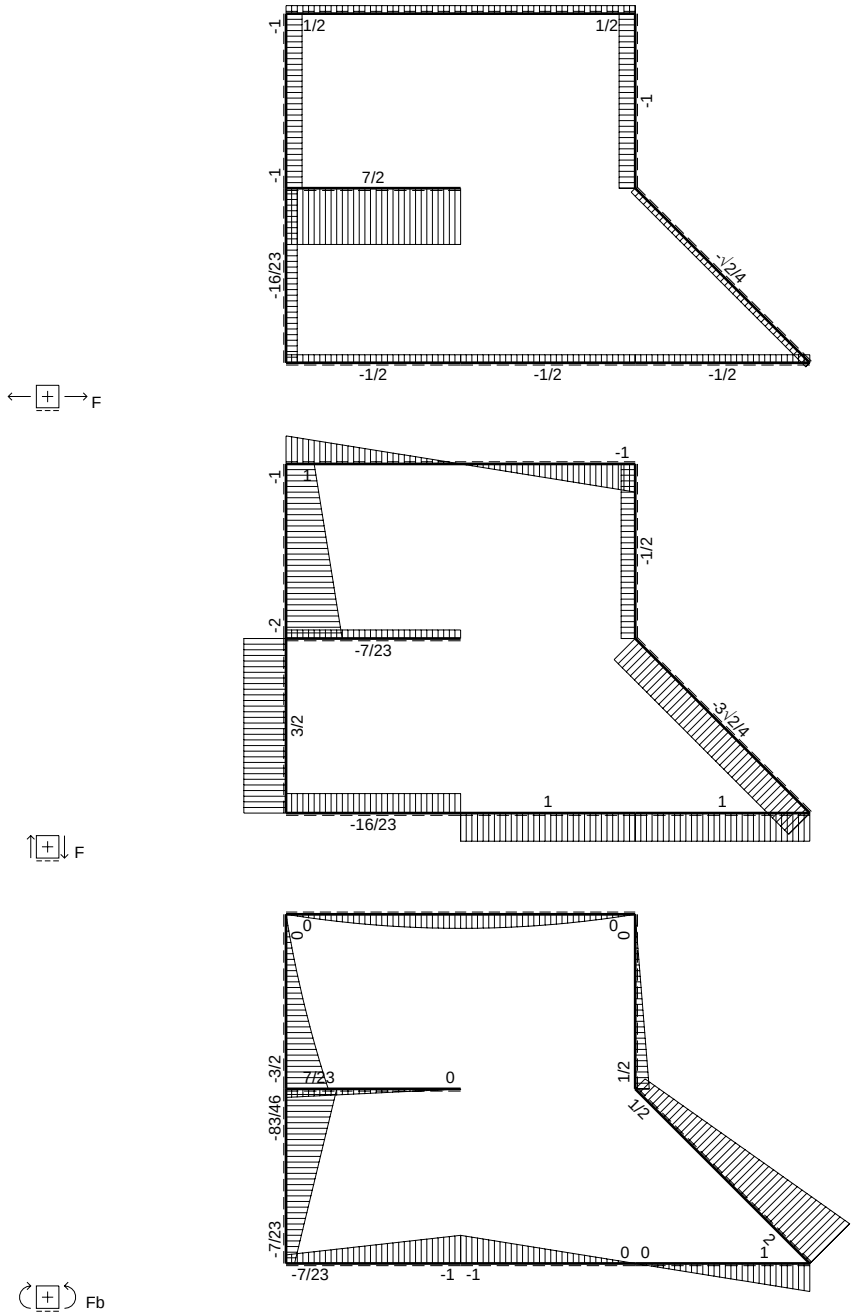
F
-1
1/2
1/2
-1
-1
7/2
-16/23
-√2/4
-1/2
-1/2
-1/2
F
-1
1
-1
-1/2
-2
-7/23
3/2
-3√2/4
1
1
-16/23
Fb
0
0
0
0
-3/2
7/23
0
1/2
1/2
-83/46
-7/23
0 0
2
1
-7/23
-1 -1

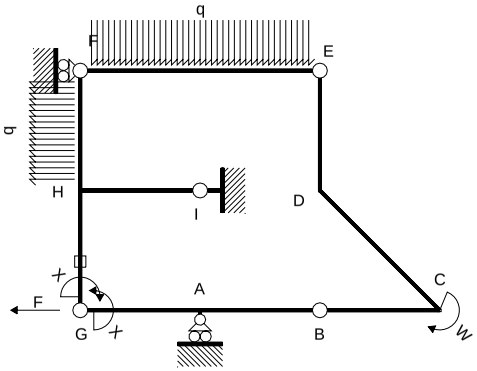

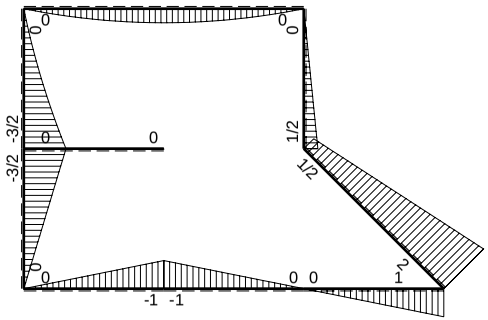

M_0 flessione da carichi assegnati

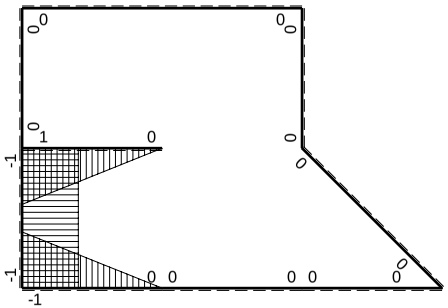

M_x flessione da iperstatica X=1

Quadro contributi PLV per iperstatica $X=W_{GA}$

→	$M_x(x)$	$M_0(x)$	M_xM_0	M_xM_x	$\int M_xM_0/EJdx$	$\int XM_xM_x/EJdx$
AB b	0	-Fb+Fx	0	0	0	0
BA b	0	Fx	0	0		
BC b	0	Fx	0	0	0	0
CB b	0	-Fb+Fx	0	0		
CD √2b	0	2Fb-3√2/4Fx	0	0	0	0
DE b	0	1/2Fb-1/2Fx	0	0	0	0
ED b	0	-1/2Fx	0	0		
EF 2b	0	$-Fx+1/2qx^2$	0	0	0	0
FE 2b	0	$Fx-1/2qx^2$	0	0		
GA b	-1+x/b	-Fx	$Fx-Fx^2/b$	$1-2x/b+x^2/b^2$	$1/6Fb^2/EJ$	1/3Xb/EJ
AG b	x/b	Fb-Fx	$Fx-Fx^2/b$	x^2/b^2		
FH b	0	$-Fx-1/2qx^2$	0	0	0	0
HF b	0	$3/2Fb-2Fx+1/2qx^2$	0	0		
HI b	1-x/b	0	0	$1-2x/b+x^2/b^2$	0	1/3Xb/EJ
IH b	-x/b	0	0	x^2/b^2		
HG b	-1	-3/2Fb+3/2Fx	3/2Fb-3/2Fx	1	$3/4Fb^2/EJ$	Xb/EJ
GH b	1	3/2Fx	3/2Fx	1		
HG	elongazione asta $N_{1HG}\varepsilon_{HG}L_{HG}$				$-Fb^2/EJ$	
A	molla nodo $-V_{1A}(V_{0A}+XV_{1A})/k_A$				$-1/2Fb^2/EJ$	1/4Xb/EJ
	totali				$-7/12Fb^2/EJ$	23/12Xb/EJ
	iperstatica $X=W_{GA}$				7/23Fb	

Sviluppi di calcolo iperstatica

$L^{XX}_{GA} = \int_o^b (1 - 2\,x/b + x^2/b^2)\ 1/EJ\ dx = [\,x - x^2/b + 1/3\,x^3/b^2\,]_o^b\ 1/EJ$

$= (\,b - b + 1/3\,b\,)\ 1/EJ = 1/3\ b/EJ$

$L^{XX}_{AG} = \int_o^b (\,x^2/b^2\,)\ 1/EJ\ dx = [1/3\,x^3/b^2\,]_o^b\ 1/EJ$

$= (1/3\,b)\ 1/EJ = 1/3\ b/EJ$

$L^{XX}_{HI} = \int_o^b (1 - 2\,x/b + x^2/b^2)\ 1/EJ\ dx = [\,x - x^2/b + 1/3\,x^3/b^2\,]_o^b\ 1/EJ$

$= (\,b - b + 1/3\,b\,)\ 1/EJ = 1/3\ b/EJ$

$L^{XX}_{IH} = \int_o^b (\,x^2/b^2\,)\ 1/EJ\ dx = [1/3\,x^3/b^2\,]_o^b\ 1/EJ$

$= (1/3\,b)\ 1/EJ = 1/3\ b/EJ$

$L^{XX}_{HG} = \int_o^b (1)\ 1/EJ\ dx = [\,x\,]_o^b\ 1/EJ$

$= (\,b\,)\ 1/EJ = b/EJ$

$L^{XX}_{GH} = \int_o^b (1)\ 1/EJ\ dx = [\,x\,]_o^b\ 1/EJ$

$= (\,b\,)\ 1/EJ = b/EJ$

$L^{Xo}_{GA} = \int_o^b (\,x/b - x^2/b^2\,)\ Fb\ 1/EJ\ dx = [1/2\,x^2/b - 1/3\,x^3/b^2\,]_o^b\ Fb\ 1/EJ$

$= (1/2\,b - 1/3\,b)\ Fb\ 1/EJ = 1/6\ Fb^2/EJ$

$L^{Xo}_{AG} = \int_o^b (\,x/b - x^2/b^2\,)\ Fb\ 1/EJ\ dx = [1/2\,x^2/b - 1/3\,x^3/b^2\,]_o^b\ Fb\ 1/EJ$

$= (1/2\,b - 1/3\,b)\ Fb\ 1/EJ = 1/6\ Fb^2/EJ$

$L^{Xo}_{HG} = \int_o^b (3/2 - 3/2\,x/b)\ Fb\ 1/EJ\ dx - 1\ \ (-1)\ \ (-1)\ \ Fb^2/EJ$

$= [3/2\,x - 3/4\,x^2/b\,]_o^b\ Fb\ 1/EJ\ - 1\ \ (-1)\ \ (-1)\ \ Fb^2/EJ$

$= (3/2\,b - 3/4\,b)\ Fb\ 1/EJ\ - 1\ \ (-1)\ \ (-1)\ \ Fb^2/EJ = -1/4\ \ Fb^2/EJ$

$L^{Xo}_{GH} = \int_o^b (3/2\,x/b)\ Fb\ 1/EJ\ dx - 1\ \ (-1)\ \ (-1)\ \ Fb^2/EJ = [3/4\,x^2/b\,]_o^b\ Fb\ 1/EJ\ - 1\ \ (-1)\ \ (-1)\ \ Fb^2/EJ$

$= (3/4\,b)\ Fb\ 1/EJ\ - 1\ \ (-1)\ \ (-1)\ \ Fb^2/EJ = -1/4\ \ Fb^2/EJ$

PROCEDIMENTO E RISULTATI 237549 ESΣ05.xxxx.161

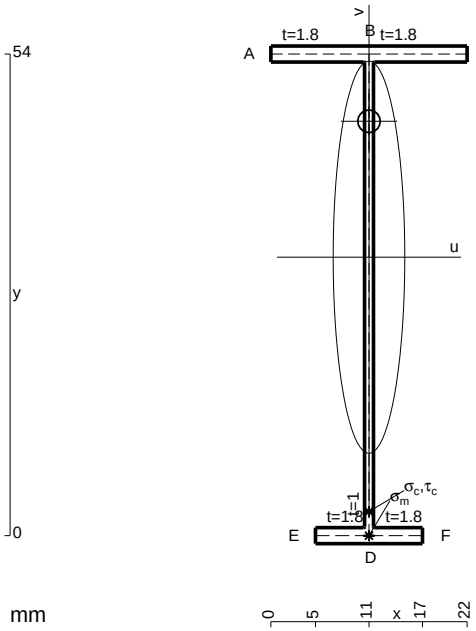

A = 115.2 mm^2
J_u = 55687. mm^4
J_v = 1856. mm^4
J_t = 84.1 mm^4
y_o = 15.24 mm
y_g = 31.22 mm
N = -480. N
T_y = -960. N
M_x = -360000. Nmm
x_m = 11. mm
v_m = -31.22 mm
$\sigma_m = N/A - Mv/J_u$ = -206. N/mm^2
y_c = 3. mm
u_c = -11. mm
v_c = -28.22 mm
$\sigma_c = N/A - Mv/J_u$ = -206. N/mm^2
$\tau_c = TS^*/tJ_u$ = 11.62 N/mm^2
$\tau_g = TS^*/tJ_u$ = 11.62 N/mm^2
t_c = 480. mm
$\sigma_o = \sqrt{\sigma^2 + 3\tau^2}$ = 207. N/mm^2

@ Adolfo Zavelani Rossi, Politecnico di Milano, vers.27.03.13 01.12.25

ESΣ05.xxxx.161

@ Adolfo Zavelani Rossi, Politecnico di Milano, vers.27.03.13 01.12.25

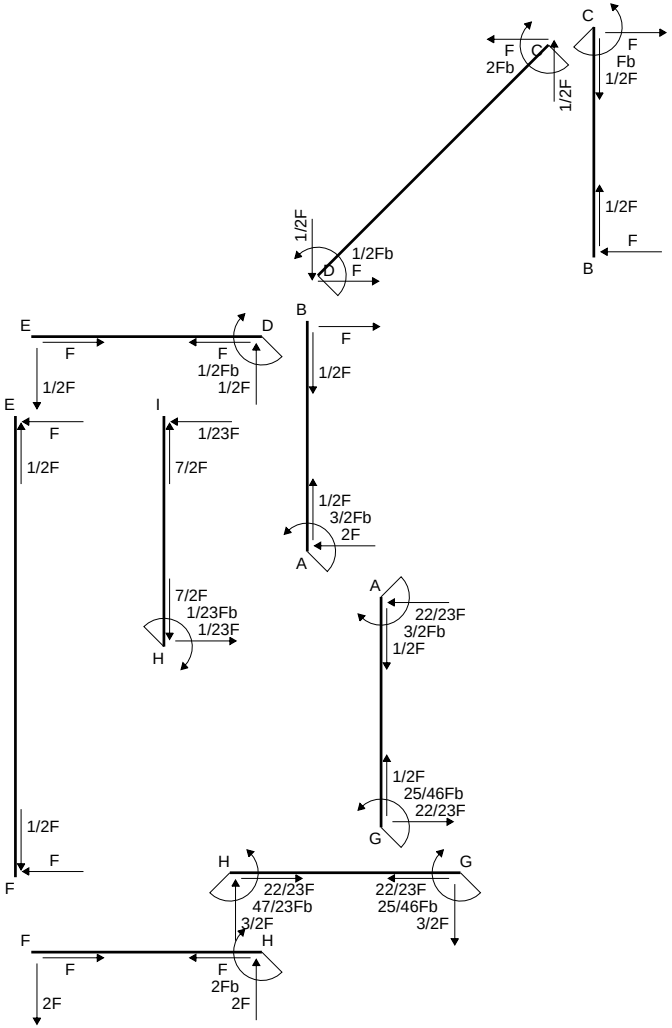
C
F
2Fb
C
1/2F
F
Fb
1/2F
1/2F
1/2F
F
B
1/2F
1/2Fb
D
F
B
F
1/2F
3/2Fb
2F
A
E
D
F
F
1/2Fb
1/2F
E
F
1/2F
I
1/23F
7/2F
7/2F
1/23Fb
1/23F
H
A
22/23F
3/2Fb
1/2F
1/2F
25/46Fb
22/23F
G
1/2F
F
F
H
G
22/23F
47/23Fb
3/2F
22/23F
25/46Fb
3/2F
F
F
H
F
2Fb
2F
2F

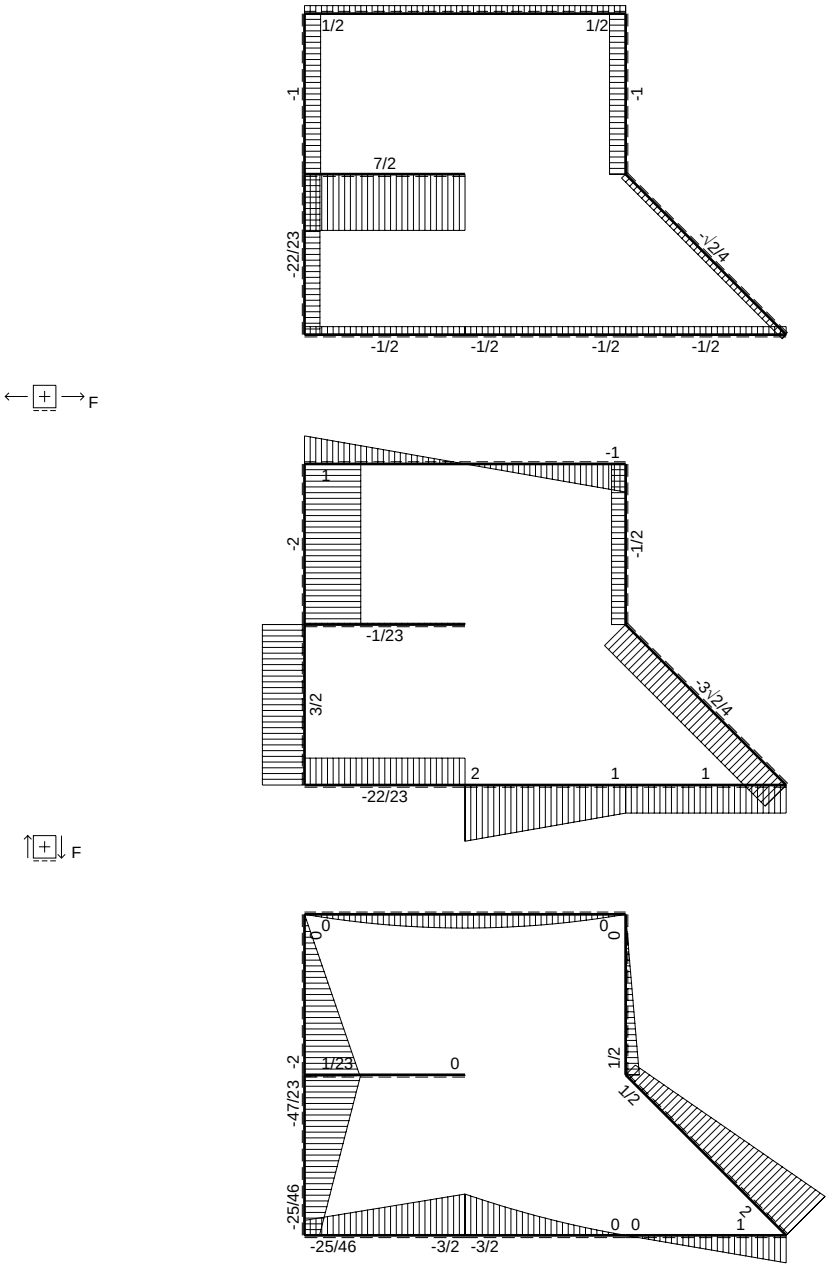
F
1/2
1/2
-1
-1
7/2
-22/23
-1/2
-1/2
-1/2
-1/2
-1/2
F
-1
1
-2
-1/2
-1/23
3/2
-3/2
2
1
1
-22/23
F
0
0
0
0
-2
1/23
0
1/2
1/2
-47/23
-25/46
0 0
1
-25/46
-3/2
-3/2
Fb

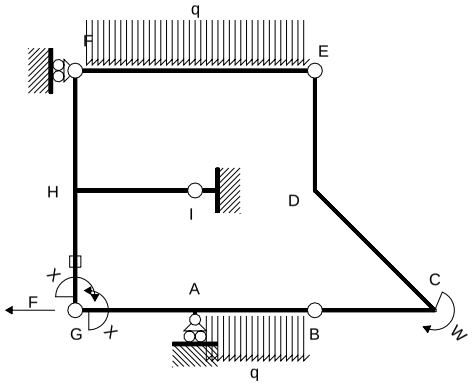

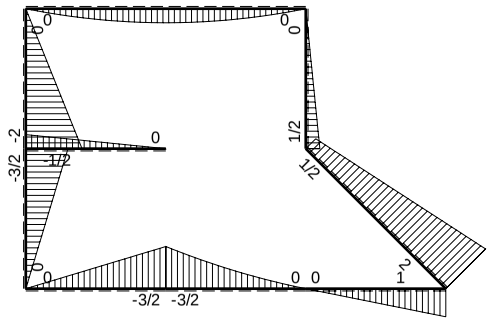

M_0 flessione da carichi assegnati

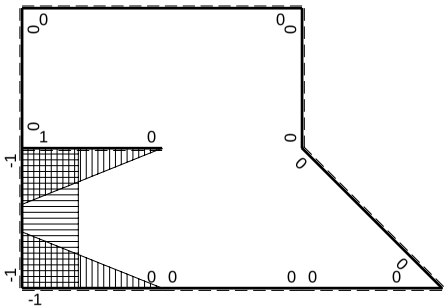

M_x flessione da iperstatica X=1

Quadro contributi PLV per iperstatica $X=W_{GA}$

→	$M_x(x)$	$M_o(x)$	M_xM_o	M_xM_x	$\int M_xM_o/EJdx$	$\int XM_xM_x/EJdx$
AB b	0	$-3/2Fb+2Fx-1/2qx^2$	0	0	0	0
BA b	0	$Fx+1/2qx^2$	0	0		
BC b	0	Fx	0	0	0	0
CB b	0	-Fb+Fx	0	0		
CD $\sqrt{2}$b	0	$2Fb-3\sqrt{2}/4Fx$	0	0	0	0
DE b	0	1/2Fb-1/2Fx	0	0	0	0
ED b	0	-1/2Fx	0	0		
EF 2b	0	$-Fx+1/2qx^2$	0	0	0	0
FE 2b	0	$Fx-1/2qx^2$	0	0		
GA b	-1+x/b	-3/2Fx	$3/2Fx-3/2Fx^2/b$	$1-2x/b+x^2/b^2$	$1/4Fb^2/EJ$	1/3Xb/EJ
AG b	x/b	3/2Fb-3/2Fx	$3/2Fx-3/2Fx^2/b$	x^2/b^2		
FH b	0	-2Fx	0	0	0	0
HF b	0	2Fb-2Fx	0	0		
HI b	1-x/b	-1/2Fb+1/2Fx	$-1/2Fb+Fx-1/2Fx^2/b$	$1-2x/b+x^2/b^2$	$-1/6Fb^2/EJ$	1/3Xb/EJ
IH b	-x/b	1/2Fx	$-1/2Fx^2/b$	x^2/b^2		
HG b	-1	-3/2Fb+3/2Fx	3/2Fb-3/2Fx	1	$3/4Fb^2/EJ$	Xb/EJ
GH b	1	3/2Fx	3/2Fx	1		
HG	elongazione asta $N_{1HG}\varepsilon_{HG}L_{HG}$				$-Fb^2/EJ$	
A	molla nodo $-V_{1A}(V_{0A}+XV_{1A})/k_A$				$-7/8Fb^2/EJ$	1/4Xb/EJ
	totali				$-25/24Fb^2/EJ$	23/12Xb/EJ
	iperstatica $X=W_{GA}$				25/46Fb	

Sviluppi di calcolo iperstatica

$L^{XX}_{GA} = \int_o^b (1 - 2\,x/b + x^2/b^2)\ 1/EJ\ dx = [\,x - x^2/b + 1/3\,x^3/b^2\,]_o^b\ 1/EJ$

$= (\,b - b + 1/3\,b\,)\ 1/EJ = 1/3\ b/EJ$

$L^{XX}_{AG} = \int_o^b (\,x^2/b^2\,)\ 1/EJ\ dx = [1/3\,x^3/b^2\,]_o^b\ 1/EJ$

$= (1/3\,b\,)\ 1/EJ = 1/3\ b/EJ$

$L^{XX}_{HI} = \int_o^b (1 - 2\,x/b + x^2/b^2)\ 1/EJ\ dx = [\,x - x^2/b + 1/3\,x^3/b^2\,]_o^b\ 1/EJ$

$= (\,b - b + 1/3\,b\,)\ 1/EJ = 1/3\ b/EJ$

$L^{XX}_{IH} = \int_o^b (\,x^2/b^2\,)\ 1/EJ\ dx = [1/3\,x^3/b^2\,]_o^b\ 1/EJ$

$= (1/3\,b\,)\ 1/EJ = 1/3\ b/EJ$

$L^{XX}_{HG} = \int_o^b (1)\ 1/EJ\ dx = [\,x\,]_o^b\ 1/EJ$

$= (\,b\,)\ 1/EJ = b/EJ$

$L^{XX}_{GH} = \int_o^b (1)\ 1/EJ\ dx = [\,x\,]_o^b\ 1/EJ$

$= (\,b\,)\ 1/EJ = b/EJ$

$L^{Xo}_{GA} = \int_o^b (3/2\,x/b - 3/2\,x^2/b^2)\ Fb\ 1/EJ\ dx = [3/4\,x^2/b - 1/2\,x^3/b^2\,]_o^b\ Fb\ 1/EJ$

$= (3/4\,b - 1/2\,b\,)\ Fb\ 1/EJ = 1/4\ Fb^2/EJ$

$L^{Xo}_{AG} = \int_o^b (3/2\,x/b - 3/2\,x^2/b^2)\ Fb\ 1/EJ\ dx = [3/4\,x^2/b - 1/2\,x^3/b^2\,]_o^b\ Fb\ 1/EJ$

$= (3/4\,b - 1/2\,b\,)\ Fb\ 1/EJ = 1/4\ Fb^2/EJ$

$L^{Xo}_{HI} = \int_o^b (-1/2 + x/b - 1/2\,x^2/b^2)\ Fb\ 1/EJ\ dx = [-1/2\,x + 1/2\,x^2/b - 1/6\,x^3/b^2\,]_o^b\ Fb\ 1/EJ$

$= (-1/2\,b + 1/2\,b - 1/6\,b\,)\ Fb\ 1/EJ = -1/6\ Fb^2/EJ$

$L^{Xo}_{IH} = \int_o^b (-1/2\,x^2/b^2)\ Fb\ 1/EJ\ dx = [-1/6\,x^3/b^2\,]_o^b\ Fb\ 1/EJ$

$= (-1/6\,b\,)\ Fb\ 1/EJ = -1/6\ Fb^2/EJ$

$L^{Xo}_{HG} = \int_o^b (3/2 - 3/2\,x/b)\ Fb\ 1/EJ\ dx - 1\ \ (-1)\ \ (-1)\ \ Fb^2/EJ$

$= [3/2\,x - 3/4\,x^2/b\,]_o^b\ Fb\ 1/EJ\ - 1\ \ (-1)\ \ (-1)\ \ Fb^2/EJ$

$= (3/2\,b - 3/4\,b\,)\ Fb\ 1/EJ\ - 1\ \ (-1)\ \ (-1)\ \ Fb^2/EJ = -1/4\ \ Fb^2/EJ$

$L^{Xo}_{GH} = \int_o^b (3/2\,x/b)\ Fb\ 1/EJ\ dx - 1\ \ (-1)\ \ (-1)\ \ Fb^2/EJ = [3/4\,x^2/b\,]_o^b\ Fb\ 1/EJ\ - 1\ \ (-1)\ \ (-1)\ \ Fb^2/EJ$

$= (3/4\,b\,)\ Fb\ 1/EJ\ - 1\ \ (-1)\ \ (-1)\ \ Fb^2/EJ = -1/4\ \ Fb^2/EJ$

PROCEDIMENTO E RISULTATI 966407 ESΣ05.xxxx.162

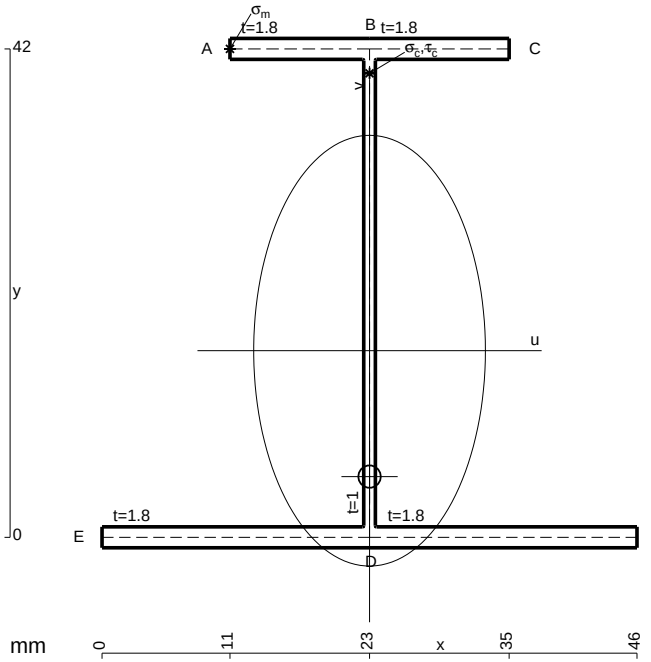

A = 168. mm^2
J_u = 57624. mm^4
J_v = 16674. mm^4
J_t = 150.1 mm^4
y_o = -10.83 mm
y_g = 16.05 mm
N = -570. N
T_y = -1140. N
M_x = -490200. Nmm
x_m = 11. mm
y_m = 42. mm
u_m = -12. mm
v_m = 25.95 mm
$\sigma_m = N/A - Mv/J_u$ = 217.4 N/mm^2
x_c = 23. mm
y_c = 42. mm
v_c = 25.95 mm
$\sigma_c = N/A - Mv/J_u$ = 217.4 N/mm^2
$\tau_c = TS^*/tJ_u$ = 22.18 N/mm^2
$\tau_g = TS^*/tJ_u$ = 22.18 N/mm^2
t_c = 570. mm
$\sigma_o = \sqrt{\sigma^2 + 3\tau^2}$ = 220.7 N/mm^2

ESΣ05.xxxx.162

@ Adolfo Zavelani Rossi, Politecnico di Milano, vers.27.03.13 01.12.25

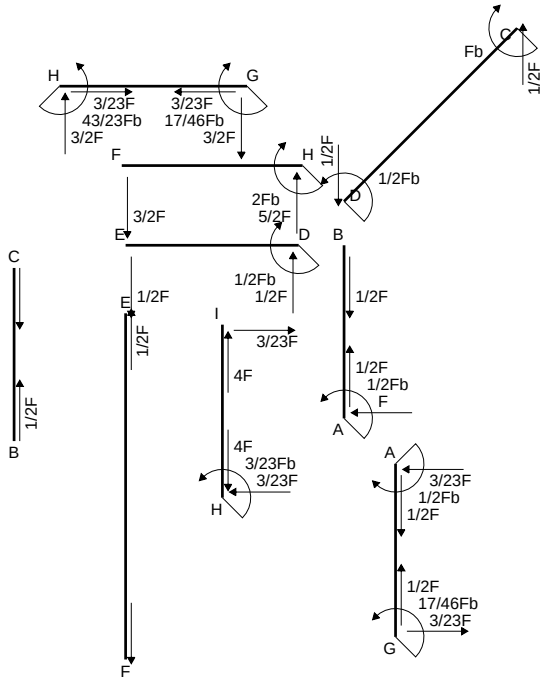
H
G
3/23F
43/23Fb
3/2F
3/23F
17/46Fb
3/2F
F
H
1/2F
Fb
C
1/2F
1/2Fb
D
2Fb
5/2F
3/2F
E
D
B
C
1/2Fb
1/2F
1/2F
E
1/2F
1/2F
I
3/23F
4F
1/2F
1/2Fb
F
A
B
4F
3/23Fb
3/23F
H
A
3/23F
1/2Fb
1/2F
1/2F
17/46Fb
3/23F
G
F

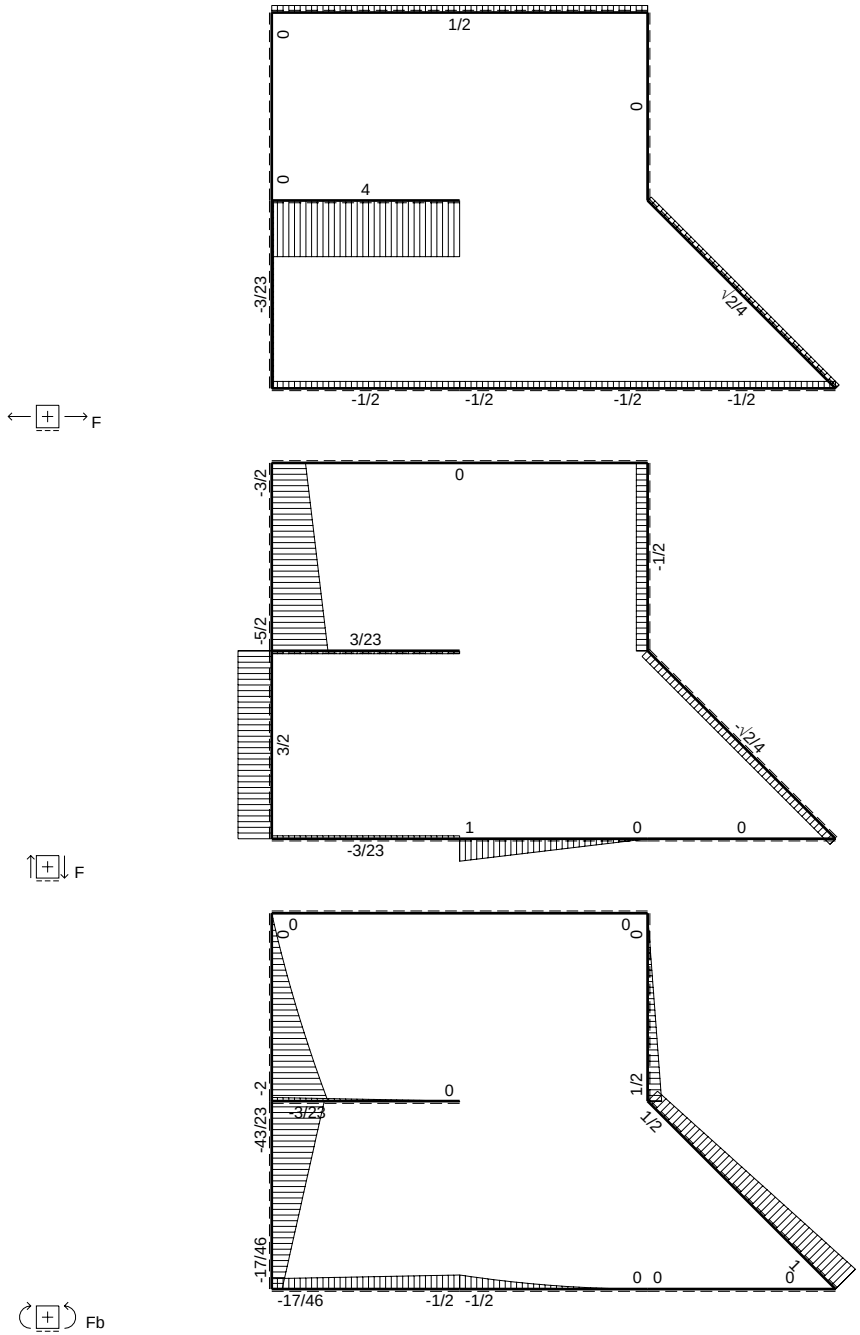
F
0
1/2
0
0
4
-3/23
√2/4
-1/2
-1/2
-1/2
-1/2
F
-3/2
0
-1/2
-5/2
3/23
3/2
√2/4
1
0
0
-3/23
Fb
0
0
0
0
-2
0
1/2
-43/23
3/23
1/2
-17/46
0 0
0
-17/46
-1/2
-1/2

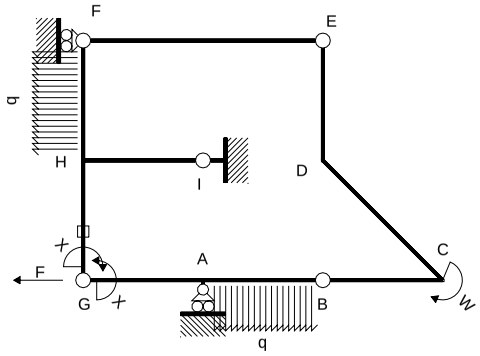

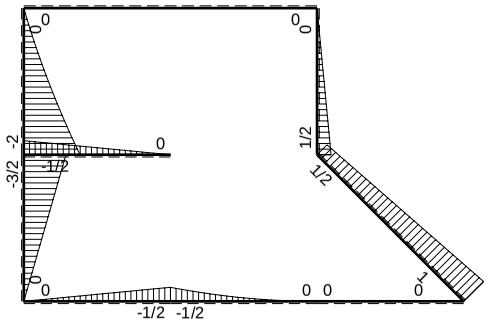

M_0 flessione da carichi assegnati

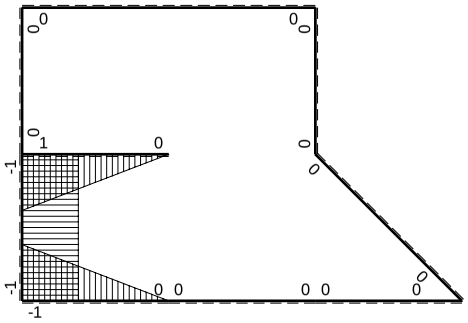

M_x flessione da iperstatica X=1

Quadro contributi PLV per iperstatica $X=W_{GA}$

→	$M_x(x)$	$M_0(x)$	M_xM_0	M_xM_x	$\int M_xM_0/EJdx$	$\int XM_xM_x/EJdx$
AB b	0	$-1/2Fb+Fx-1/2qx^2$	0	0	0	0
BA b	0	$1/2qx^2$	0	0		
BC b	0	0	0	0	0	0
CB b	0	0	0	0		
CD $\sqrt{2}b$	0	$Fb-\sqrt{2}/4Fx$	0	0	0	0
DE b	0	$1/2Fb-1/2Fx$	0	0	0	0
ED b	0	$-1/2Fx$	0	0		
EF 2b	0	0	0	0	0	0
FE 2b	0	0	0	0		
GA b	-1+x/b	$-1/2Fx$	$1/2Fx-1/2Fx^2/b$	$1-2x/b+x^2/b^2$	$1/12Fb^2/EJ$	$1/3Xb/EJ$
AG b	x/b	$1/2Fb-1/2Fx$	$1/2Fx-1/2Fx^2/b$	x^2/b^2		
FH b	0	$-3/2Fx-1/2qx^2$	0	0	0	0
HF b	0	$2Fb-5/2Fx+1/2qx^2$	0	0		
HI b	1-x/b	$-1/2Fb+1/2Fx$	$-1/2Fb+Fx-1/2Fx^2/b$	$1-2x/b+x^2/b^2$	$-1/6Fb^2/EJ$	$1/3Xb/EJ$
IH b	-x/b	$1/2Fx$	$-1/2Fx^2/b$	x^2/b^2		
HG b	-1	$-3/2Fb+3/2Fx$	$3/2Fb-3/2Fx$	1	$3/4Fb^2/EJ$	Xb/EJ
GH b	1	$3/2Fx$	$3/2Fx$	1		
HG	elongazione asta $N_{1HG}\varepsilon_{HG}L_{HG}$				$-Fb^2/EJ$	
A	molla nodo $-V_{1A}(V_{0A}+XV_{1A})/k_A$				$-3/8Fb^2/EJ$	$1/4Xb/EJ$
	totali				$-17/24Fb^2/EJ$	$23/12Xb/EJ$
	iperstatica $X=W_{GA}$				17/46Fb	

Sviluppi di calcolo iperstatica

$L^{XX}_{GA} = \int_o^b (1 - 2\,x/b + x^2/b^2)\ 1/EJ\ dx = [\,x - x^2/b + 1/3\,x^3/b^2\,]_o^b\ 1/EJ$

$= (\,b - b + 1/3\,b\,)\ 1/EJ = 1/3\ b/EJ$

$L^{XX}_{AG} = \int_o^b (\,x^2/b^2\,)\ 1/EJ\ dx = [1/3\,x^3/b^2\,]_o^b\ 1/EJ$

$= (1/3\,b\,)\ 1/EJ = 1/3\ b/EJ$

$L^{XX}_{HI} = \int_o^b (1 - 2\,x/b + x^2/b^2)\ 1/EJ\ dx = [\,x - x^2/b + 1/3\,x^3/b^2\,]_o^b\ 1/EJ$

$= (\,b - b + 1/3\,b\,)\ 1/EJ = 1/3\ b/EJ$

$L^{XX}_{IH} = \int_o^b (\,x^2/b^2\,)\ 1/EJ\ dx = [1/3\,x^3/b^2\,]_o^b\ 1/EJ$

$= (1/3\,b\,)\ 1/EJ = 1/3\ b/EJ$

$L^{XX}_{HG} = \int_o^b (1)\ 1/EJ\ dx = [\,x\,]_o^b\ 1/EJ$

$= (\,b\,)\ 1/EJ = b/EJ$

$L^{XX}_{GH} = \int_o^b (1)\ 1/EJ\ dx = [\,x\,]_o^b\ 1/EJ$

$= (\,b\,)\ 1/EJ = b/EJ$

$L^{Xo}_{GA} = \int_o^b (1/2\,x/b - 1/2\,x^2/b^2)\ Fb\ 1/EJ\ dx = [1/4\,x^2/b - 1/6\,x^3/b^2\,]_o^b\ Fb\ 1/EJ$

$= (1/4\,b - 1/6\,b\,)\ Fb\ 1/EJ = 1/12\ Fb^2/EJ$

$L^{Xo}_{AG} = \int_o^b (1/2\,x/b - 1/2\,x^2/b^2\,)\ Fb\ 1/EJ\ dx = [1/4\,x^2/b - 1/6\,x^3/b^2\,]_o^b\ Fb\ 1/EJ$

$= (1/4\,b - 1/6\,b\,)\ Fb\ 1/EJ = 1/12\ Fb^2/EJ$

$L^{Xo}_{HI} = \int_o^b (-1/2 + x/b - 1/2\,x^2/b^2\,)\ Fb\ 1/EJ\ dx = [-1/2\,x + 1/2\,x^2/b - 1/6\,x^3/b^2\,]_o^b\ Fb\ 1/EJ$

$= (-1/2\,b + 1/2\,b - 1/6\,b\,)\ Fb\ 1/EJ = -1/6\ Fb^2/EJ$

$L^{Xo}_{IH} = \int_o^b (-1/2\,x^2/b^2\,)\ Fb\ 1/EJ\ dx = [-1/6\,x^3/b^2\,]_o^b\ Fb\ 1/EJ$

$= (-1/6\,b\,)\ Fb\ 1/EJ = -1/6\ Fb^2/EJ$

$L^{Xo}_{HG} = \int_o^b (3/2 - 3/2\,x/b\,)\ Fb\ 1/EJ\ dx - 1\ \ (-1)\ \ (-1)\ \ Fb^2/EJ$

$= [3/2\,x - 3/4\,x^2/b\,]_o^b\ Fb\ 1/EJ\ - 1\ \ (-1)\ \ (-1)\ \ Fb^2/EJ$

$= (3/2\,b - 3/4\,b\,)\ Fb\ 1/EJ\ - 1\ \ (-1)\ \ (-1)\ \ Fb^2/EJ = -1/4\ \ Fb^2/EJ$

$L^{Xo}_{GH} = \int_o^b (3/2\,x/b\,)\ Fb\ 1/EJ\ dx - 1\ \ (-1)\ \ (-1)\ \ Fb^2/EJ = [3/4\,x^2/b\,]_o^b\ Fb\ 1/EJ\ - 1\ \ (-1)\ \ (-1)\ \ Fb^2/EJ$

$= (3/4\,b\,)\ Fb\ 1/EJ\ - 1\ \ (-1)\ \ (-1)\ \ Fb^2/EJ = -1/4\ \ Fb^2/EJ$

PROCEDIMENTO E RISULTATI 213077 ESΣ05.xxxx.163

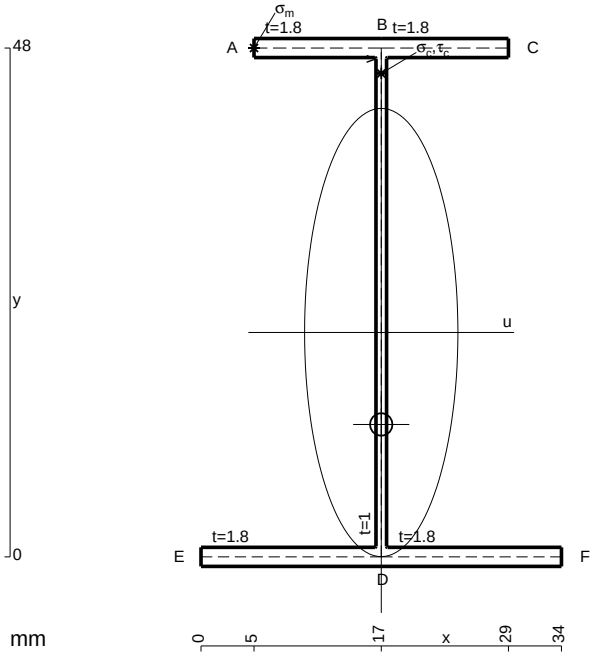

A = 152.4 mm^2
J_u = 68126. mm^4
J_v = 7969. mm^4
J_t = 128.8 mm^4
y_o = -8.676 mm
y_g = 21.17 mm
T_y = -1375. N
M_x = -583000. Nmm
x_m = 5. mm
y_m = 48. mm
u_m = -12. mm
v_m = 26.83 mm
$\sigma_m = -Mv/J_u$ = 229.6 N/mm^2
x_c = 17. mm
y_c = 48. mm
v_c = 26.83 mm
$\sigma_c = -Mv/J_u$ = 229.6 N/mm^2
$\tau_c = TS^*/tJ_u$ = 23.4 N/mm^2
$\tau_g = TS^*/tJ_u$ = 23.4 N/mm^2
t_c = 550. mm
$\sigma_o = \sqrt{\sigma^2 + 3\tau^2}$ = 233.2 N/mm^2

@ Adolfo Zavelani Rossi, Politecnico di Milano, vers.27.03.13 01.12.25

ESΣ05.xxxx.163

@ Adolfo Zavelani Rossi, Politecnico di Milano, vers.27.03.13 01.12.25

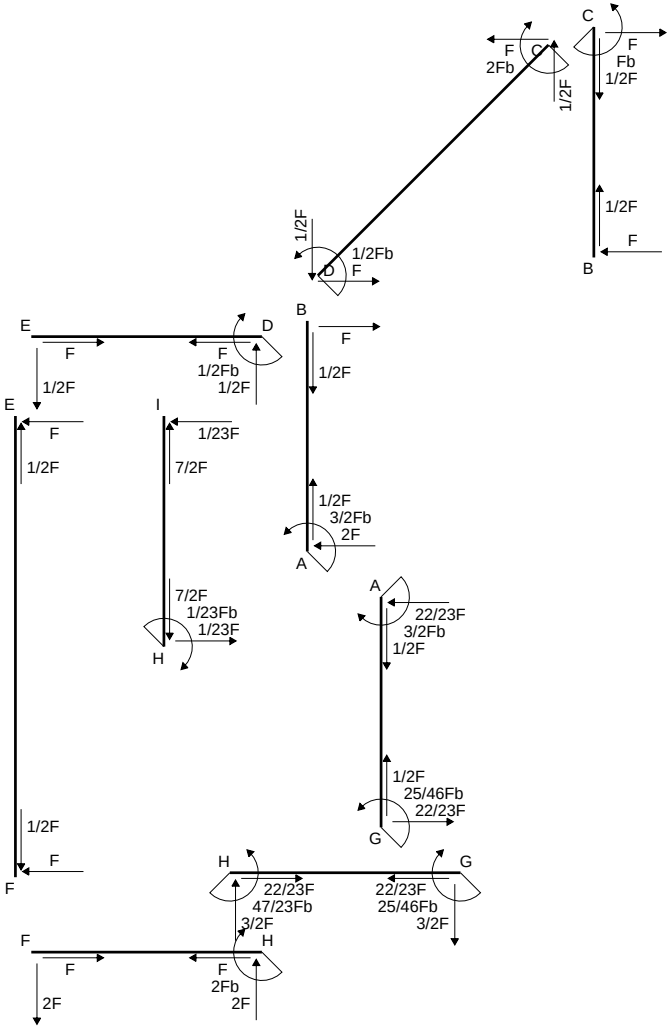
C
F
Fb
1/2F
F
2Fb
C
1/2F
1/2F
F
B
1/2F
1/2Fb
F
D
E
F
D
F
1/2Fb
1/2F
1/2F
B
F
1/2F
E
F
1/2F
I
1/23F
7/2F
1/2F
3/2Fb
2F
A
7/2F
1/23Fb
1/23F
H
A
22/23F
3/2Fb
1/2F
1/2F
25/46Fb
22/23F
G
1/2F
F
F
H
22/23F
47/23Fb
3/2F
H
G
22/23F
25/46Fb
3/2F
F
F
F
2Fb
2F
2F

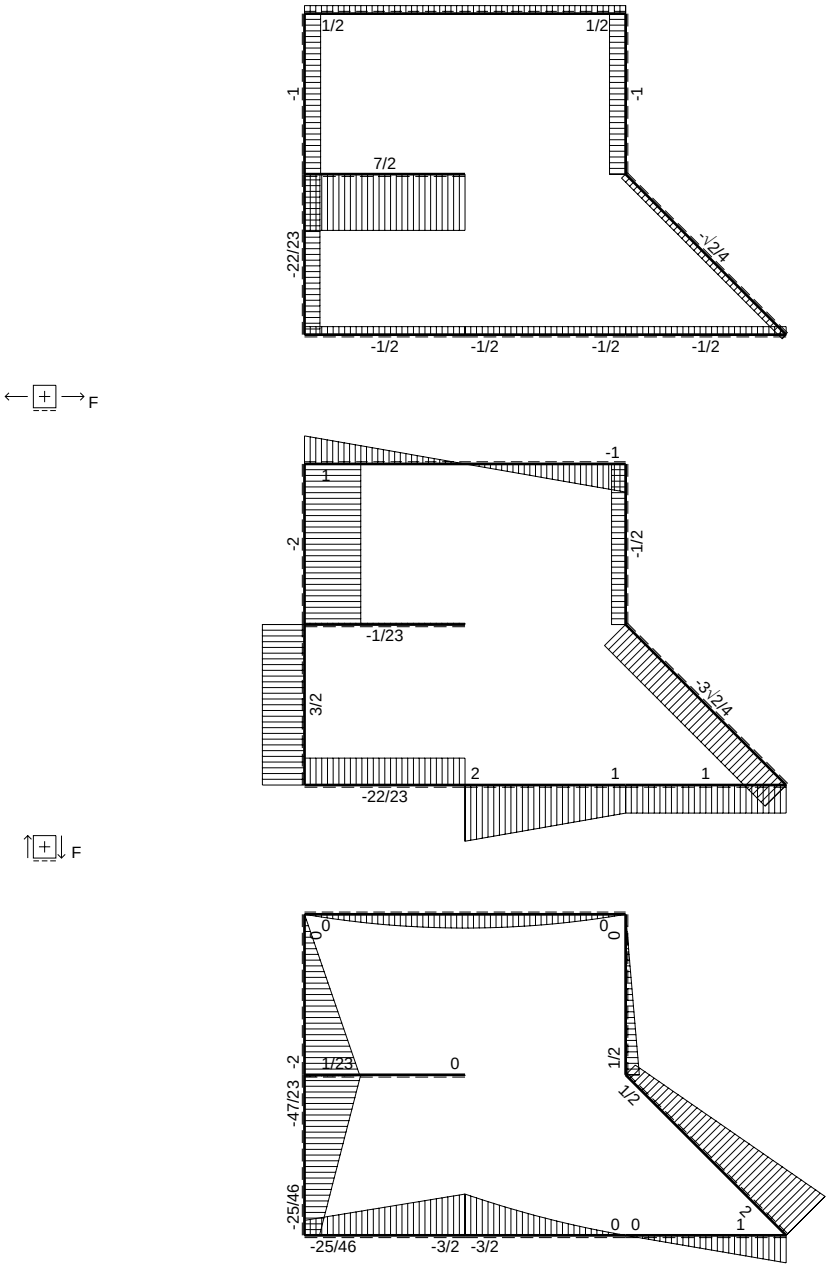
F
1/2
1/2
-1
-1
7/2
-22/23
-1/2
-1/2
-1/2
-1/2
-1/2
F
-1
1
-2
-1/2
-1/23
3/2
-3/2
2
1
1
-22/23
F
0
0
0
0
-2
1/23
0
1/2
1/2
-47/23
-25/46
0 0
1
-25/46
-3/2
-3/2
Fb

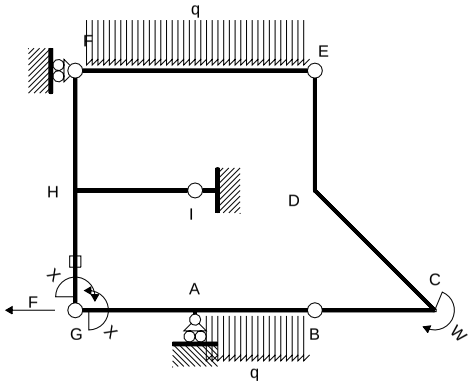

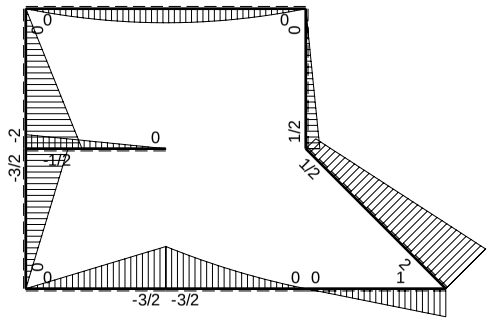

M_0 flessione da carichi assegnati

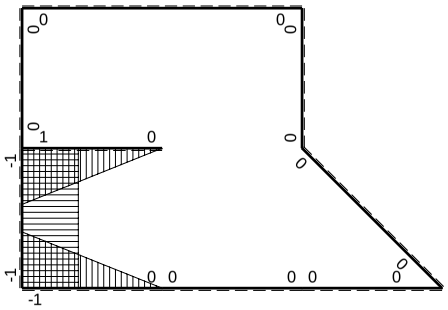

M_x flessione da iperstatica X=1

Quadro contributi PLV per iperstatica $X=W_{GA}$

→	$M_x(x)$	$M_0(x)$	M_xM_0	M_xM_x	$\int M_xM_0/EJdx$	$\int XM_xM_x/EJdx$
AB b	0	$-3/2Fb+2Fx-1/2qx^2$	0	0	0	0
BA b	0	$Fx+1/2qx^2$	0	0		
BC b	0	Fx	0	0	0	0
CB b	0	-Fb+Fx	0	0		
CD √2b	0	$2Fb-3\sqrt{2}/4Fx$	0	0	0	0
DE b	0	1/2Fb-1/2Fx	0	0	0	0
ED b	0	-1/2Fx	0	0		
EF 2b	0	$-Fx+1/2qx^2$	0	0	0	0
FE 2b	0	$Fx-1/2qx^2$	0	0		
GA b	-1+x/b	-3/2Fx	$3/2Fx-3/2Fx^2/b$	$1-2x/b+x^2/b^2$	$1/4Fb^2/EJ$	1/3Xb/EJ
AG b	x/b	3/2Fb-3/2Fx	$3/2Fx-3/2Fx^2/b$	x^2/b^2		
FH b	0	-2Fx	0	0	0	0
HF b	0	2Fb-2Fx	0	0		
HI b	1-x/b	-1/2Fb+1/2Fx	$-1/2Fb+Fx-1/2Fx^2/b$	$1-2x/b+x^2/b^2$	$-1/6Fb^2/EJ$	1/3Xb/EJ
IH b	-x/b	1/2Fx	$-1/2Fx^2/b$	x^2/b^2		
HG b	-1	-3/2Fb+3/2Fx	3/2Fb-3/2Fx	1	$3/4Fb^2/EJ$	Xb/EJ
GH b	1	3/2Fx	3/2Fx	1		
HG	elongazione asta $N_{1HG}\varepsilon_{HG}L_{HG}$				$-Fb^2/EJ$	
A	molla nodo $-V_{1A}(V_{0A}+XV_{1A})/k_A$				$-7/8Fb^2/EJ$	1/4Xb/EJ
	totali				$-25/24Fb^2/EJ$	23/12Xb/EJ
	iperstatica $X=W_{GA}$				25/46Fb	

Sviluppi di calcolo iperstatica

$L^{XX}_{GA} = \int_o^b (1 - 2\,x/b + x^2/b^2)\ 1/EJ\ dx = [\,x - x^2/b + 1/3\,x^3/b^2\,]_o^b\ 1/EJ$

$= (\,b - b + 1/3\,b\,)\ 1/EJ = 1/3\ b/EJ$

$L^{XX}_{AG} = \int_o^b (\,x^2/b^2\,)\ 1/EJ\ dx = [1/3\,x^3/b^2\,]_o^b\ 1/EJ$

$= (1/3\,b)\ 1/EJ = 1/3\ b/EJ$

$L^{XX}_{HI} = \int_o^b (1 - 2\,x/b + x^2/b^2)\ 1/EJ\ dx = [\,x - x^2/b + 1/3\,x^3/b^2\,]_o^b\ 1/EJ$

$= (\,b - b + 1/3\,b\,)\ 1/EJ = 1/3\ b/EJ$

$L^{XX}_{IH} = \int_o^b (\,x^2/b^2\,)\ 1/EJ\ dx = [1/3\,x^3/b^2\,]_o^b\ 1/EJ$

$= (1/3\,b)\ 1/EJ = 1/3\ b/EJ$

$L^{XX}_{HG} = \int_o^b (1)\ 1/EJ\ dx = [\,x\,]_o^b\ 1/EJ$

$= (\,b\,)\ 1/EJ = b/EJ$

$L^{XX}_{GH} = \int_o^b (1)\ 1/EJ\ dx = [\,x\,]_o^b\ 1/EJ$

$= (\,b\,)\ 1/EJ = b/EJ$

$L^{Xo}_{GA} = \int_o^b (3/2\,x/b - 3/2\,x^2/b^2)\ Fb\ 1/EJ\ dx = [3/4\,x^2/b - 1/2\,x^3/b^2\,]_o^b\ Fb\ 1/EJ$

$= (3/4\,b - 1/2\,b)\ Fb\ 1/EJ = 1/4\ Fb^2/EJ$

$L^{Xo}_{AG} = \int_o^b (3/2\,x/b - 3/2\,x^2/b^2)\ Fb\ 1/EJ\ dx = [3/4\,x^2/b - 1/2\,x^3/b^2\,]_o^b\ Fb\ 1/EJ$

$= (3/4\,b - 1/2\,b)\ Fb\ 1/EJ = 1/4\ Fb^2/EJ$

$L^{Xo}_{HI} = \int_o^b (-1/2 + x/b - 1/2\,x^2/b^2)\ Fb\ 1/EJ\ dx = [-1/2\,x + 1/2\,x^2/b - 1/6\,x^3/b^2\,]_o^b\ Fb\ 1/EJ$

$= (-1/2\,b + 1/2\,b - 1/6\,b)\ Fb\ 1/EJ = -1/6\ Fb^2/EJ$

$L^{Xo}_{IH} = \int_o^b (-1/2\,x^2/b^2)\ Fb\ 1/EJ\ dx = [-1/6\,x^3/b^2\,]_o^b\ Fb\ 1/EJ$

$= (-1/6\,b)\ Fb\ 1/EJ = -1/6\ Fb^2/EJ$

$L^{Xo}_{HG} = \int_o^b (3/2 - 3/2\,x/b)\ Fb\ 1/EJ\ dx - 1\ \ (-1)\ \ (-1)\ \ Fb^2/EJ$

$= [3/2\,x - 3/4\,x^2/b\,]_o^b\ Fb\ 1/EJ\ -\ 1\ \ (-1)\ \ (-1)\ \ Fb^2/EJ$

$= (3/2\,b - 3/4\,b)\ Fb\ 1/EJ\ -\ 1\ \ (-1)\ \ (-1)\ \ Fb^2/EJ = -1/4\ \ Fb^2/EJ$

$L^{Xo}_{GH} = \int_o^b (3/2\,x/b)\ Fb\ 1/EJ\ dx - 1\ \ (-1)\ \ (-1)\ \ Fb^2/EJ = [3/4\,x^2/b\,]_o^b\ Fb\ 1/EJ\ -\ 1\ \ (-1)\ \ (-1)\ \ Fb^2/EJ$

$= (3/4\,b)\ Fb\ 1/EJ\ -\ 1\ \ (-1)\ \ (-1)\ \ Fb^2/EJ = -1/4\ \ Fb^2/EJ$

PROCEDIMENTO E RISULTATI 239868 ESΣ05.xxxx.164

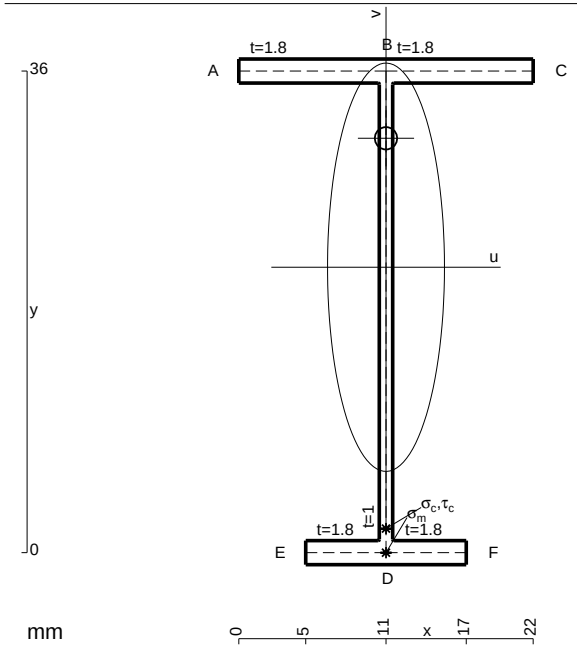

A = 97.2 mm^2
J_u = 22637. mm^4
J_v = 1856. mm^4
J_t = 78.1 mm^4
y_o = 9.64 mm
y_g = 21.33 mm
N = -290. N
T_y = -580. N
M_x = -249400. Nmm
x_m = 11. mm
v_m = -21.33 mm
$\sigma_m = N/A - Mv/J_u$ = -238. N/mm^2
y_c = 3. mm
u_c = -11. mm
v_c = -18.33 mm
$\sigma_c = N/A - Mv/J_u$ = -238. N/mm^2
$\tau_c = TS^*/tJ_u$ = 11.81 N/mm^2
$\tau_g = TS^*/tJ_u$ = 11.81 N/mm^2
t_c = 290. mm
$\sigma_o = \sqrt{\sigma^2 + 3\tau^2}$ = 238.9 N/mm^2

@ Adolfo Zavelani Rossi, Politecnico di Milano, vers.27.03.13 01.12.25

ESΣ05.xxxx.164

@ Adolfo Zavelani Rossi, Politecnico di Milano, vers.27.03.13 01.12.25

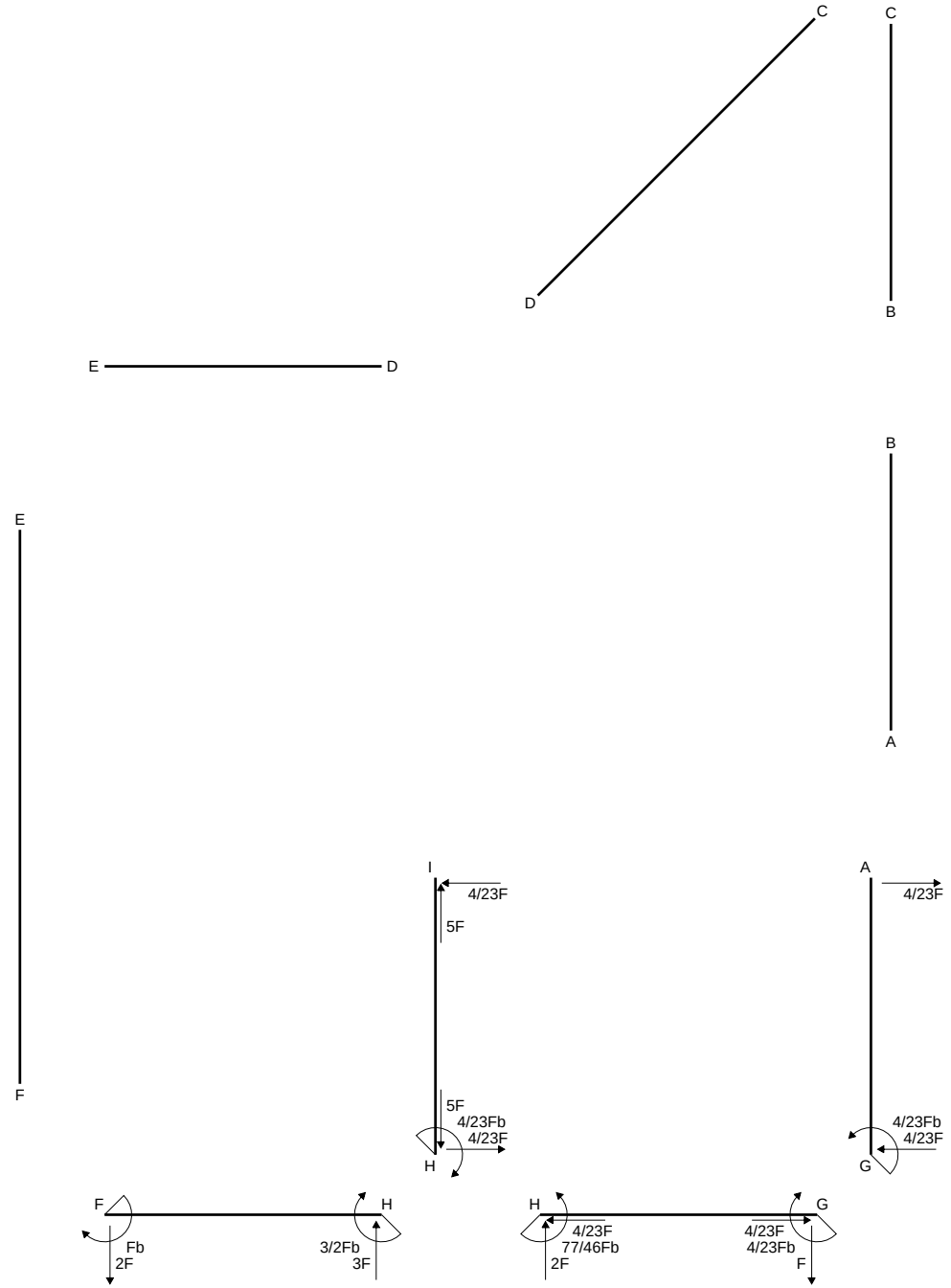
C
C
D
B
E
D
B
E
A
F
I
4/23F
5F
5F
4/23Fb
4/23F
H
A
4/23F
4/23Fb
4/23F
G
F
H
Fb
2F
3/2Fb
3F
H
G
4/23F
77/46Fb
2F
4/23F
4/23Fb
F

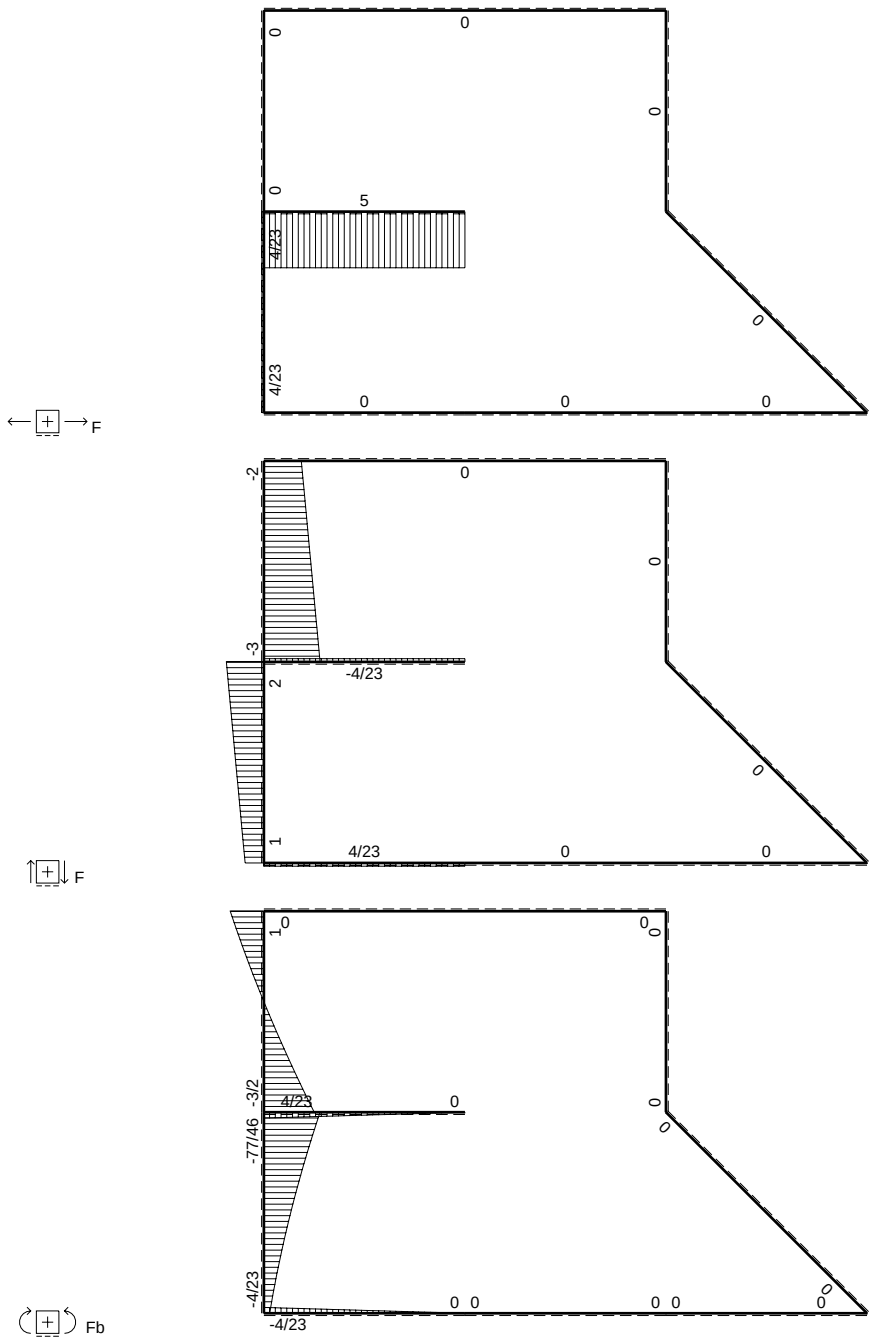
0
0
0
0
5
4/23
0
4/23
0
0
0
F
-2
0
0
-3
-4/23
2
0
1
4/23
0
0
F
1
0
0
-3/2
4/23
0
-77/46
0
0
-4/23
0 0
0 0
0
-4/23
Fb

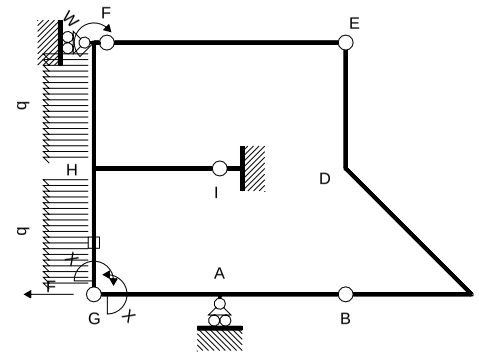

Schema di calcolo iperstatico

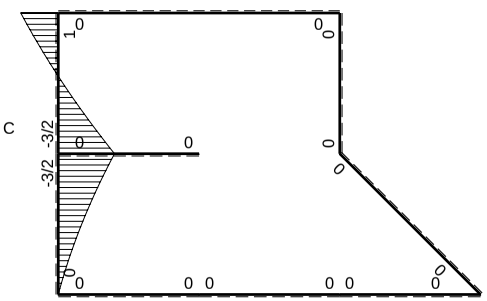

M_0 flessione da carichi assegnati

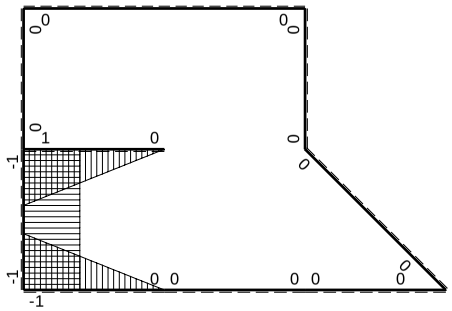

M_x flessione da iperstatica X=1

Quadro contributi PLV per iperstatica $X=W_{GA}$

→	$M_x(x)$	$M_0(x)$	M_xM_0	M_xM_x	$\int M_xM_0/EJdx$	$\int XM_xM_x/EJdx$
AB b	0	0	0	0	0	0
BA b	0	0	0	0		
BC b	0	0	0	0	0	0
CB b	0	0	0	0		
CD √2b	0	0	0	0	0	0
DE b	0	0	0	0	0	0
ED b	0	0	0	0		
EF 2b	0	0	0	0	0	0
FE 2b	0	0	0	0		
GA b	-1+x/b	0	0	$1-2x/b+x^2/b^2$	0	1/3Xb/EJ
AG b	x/b	0	0	x^2/b^2		
FH b	0	$Fb-2Fx-1/2qx^2$	0	0	0	0
HF b	0	$3/2Fb-3Fx+1/2qx^2$	0	0		
HI b	1-x/b	0	0	$1-2x/b+x^2/b^2$	0	1/3Xb/EJ
IH b	-x/b	0	0	x^2/b^2		
HG b	-1	$-3/2Fb+2Fx-1/2qx^2$	$3/2Fb-2Fx+1/2Fx^2/b$	1	$2/3Fb^2/EJ$	Xb/EJ
GH b	1	$Fx+1/2qx^2$	$Fx+1/2Fx^2/b$	1		
HG	elongazione asta $N_{1HG}\varepsilon_{HG}L_{HG}$				$-Fb^2/EJ$	
A	molla nodo $-V_{1A}(V_{0A}+XV_{1A})/k_A$					1/4Xb/EJ
	totali				$-1/3Fb^2/EJ$	23/12Xb/EJ
	iperstatica $X=W_{GA}$				4/23Fb	

Sviluppi di calcolo iperstatica

$L^{XX}_{GA} = \int_o^b (1 - 2\,x/b + x^2/b^2)\ 1/EJ\ dx = [\ x - x^2/b + 1/3\ x^3/b^2\ ]_o^b\ 1/EJ$

$= (\ b - b + 1/3\ b\ )\ 1/EJ\ = 1/3\ b/EJ$

$L^{XX}_{AG} = \int_o^b (\ x^2/b^2\ )\ 1/EJ\ dx = [1/3\ x^3/b^2\ ]_o^b\ 1/EJ$

$= (1/3\ b\ )\ 1/EJ\ = 1/3\ b/EJ$

$L^{XX}_{HI} = \int_o^b (1 - 2\,x/b + x^2/b^2)\ 1/EJ\ dx = [\ x - x^2/b + 1/3\ x^3/b^2\ ]_o^b\ 1/EJ$

$= (\ b - b + 1/3\ b\ )\ 1/EJ\ = 1/3\ b/EJ$

$L^{XX}_{IH} = \int_o^b (\ x^2/b^2\ )\ 1/EJ\ dx = [1/3\ x^3/b^2\ ]_o^b\ 1/EJ$

$= (1/3\ b\ )\ 1/EJ\ = 1/3\ b/EJ$

$L^{XX}_{HG} = \int_o^b (1)\ 1/EJ\ dx = [\ x\ ]_o^b\ 1/EJ$

$= (\ b\ )\ 1/EJ\ =\ b/EJ$

$L^{XX}_{GH} = \int_o^b (1)\ 1/EJ\ dx = [\ x\ ]_o^b\ 1/EJ$

$= (\ b\ )\ 1/EJ\ =\ b/EJ$

$L^{Xo}_{HG} = \int_o^b (3/2 - 2\,x/b + 1/2\ x^2/b^2)\ Fb\ 1/EJ\ dx - 1\ \ (-1)\ \ (-1)\ \ Fb^2/EJ$

$= [3/2\ x - x^2/b + 1/6\ x^3/b^2\ ]_o^b\ Fb\ 1/EJ\ - 1\ \ (-1)\ \ (-1)\ \ Fb^2/EJ$

$= (3/2\ b - b + 1/6\ b\ )\ Fb\ 1/EJ\ - 1\ \ (-1)\ \ (-1)\ \ Fb^2/EJ = -1/3\ \ Fb^2/EJ$

$L^{Xo}_{GH} = \int_o^b (\ x/b + 1/2\ x^2/b^2\ )\ Fb\ 1/EJ\ dx - 1\ \ (-1)\ \ (-1)\ \ Fb^2/EJ$

$= [1/2\ x^2/b + 1/6\ x^3/b^2\ ]_o^b\ Fb\ 1/EJ\ - 1\ \ (-1)\ \ (-1)\ \ Fb^2/EJ$

$= (1/2\ b + 1/6\ b\ )\ Fb\ 1/EJ\ - 1\ \ (-1)\ \ (-1)\ \ Fb^2/EJ = -1/3\ \ Fb^2/EJ$

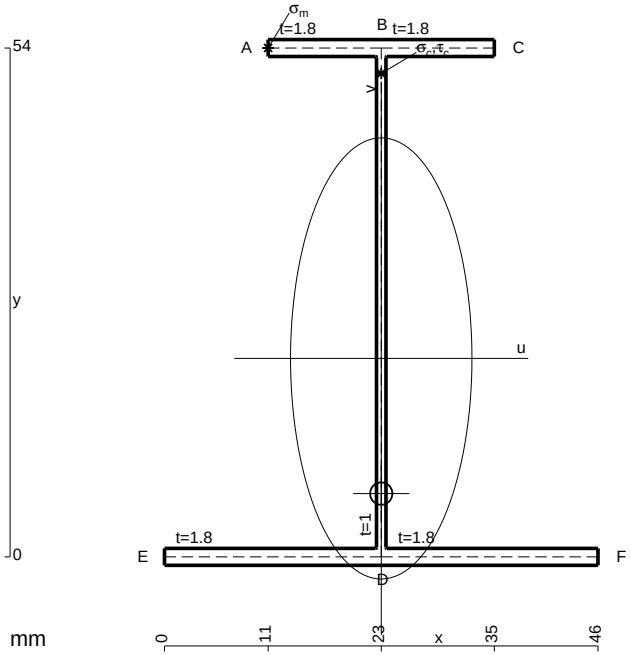

A = 180. mm^2
J_u = 98625. mm^4
J_v = 16674. mm^4
J_t = 154.1 mm^4
y_o = -14.34 mm
y_g = 21.06 mm
T_y = -1710. N
M_x = -589950. Nmm
x_m = 11. mm
y_m = 54. mm
u_m = -12. mm
v_m = 32.94 mm
$\sigma_m = -Mv/J_u$ = 197. N/mm^2
x_c = 23. mm
y_c = 54. mm
v_c = 32.94 mm
$\sigma_c = -Mv/J_u$ = 197. N/mm^2
$\tau_c = TS^*/tJ_u$ = 24.67 N/mm^2
$\tau_g = TS^*/tJ_u$ = 24.67 N/mm^2
t_c = 570. mm
$\sigma_o = \sqrt{\sigma^2 + 3\tau^2}$ = 201.6 N/mm^2

ESΣ05.xxxx.165

@ Adolfo Zavelani Rossi, Politecnico di Milano, vers.27.03.13 01.12.25

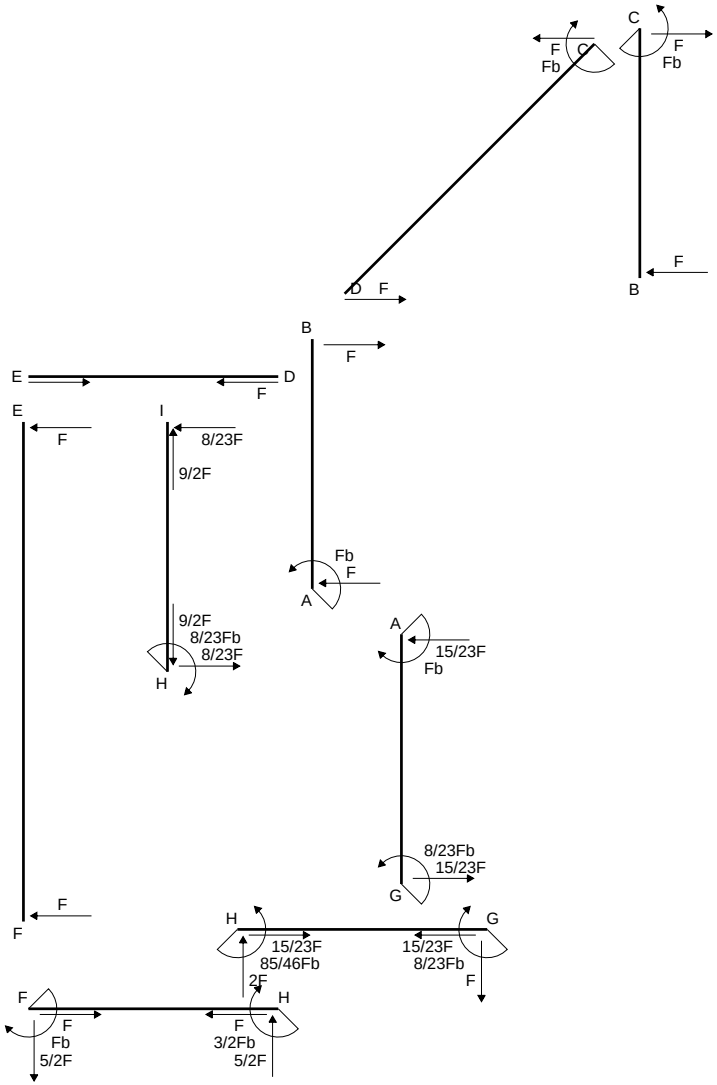
C
F
Fb
C
F
Fb
D
F
B
F
B
F
E
D
F
E
F
I
8/23F
9/2F
Fb
F
A
9/2F
8/23Fb
8/23F
H
A
15/23F
Fb
8/23Fb
15/23F
G
F
F
H
G
15/23F
85/46Fb
2F
15/23F
8/23Fb
F
F
H
F
Fb
5/2F
F
3/2Fb
5/2F

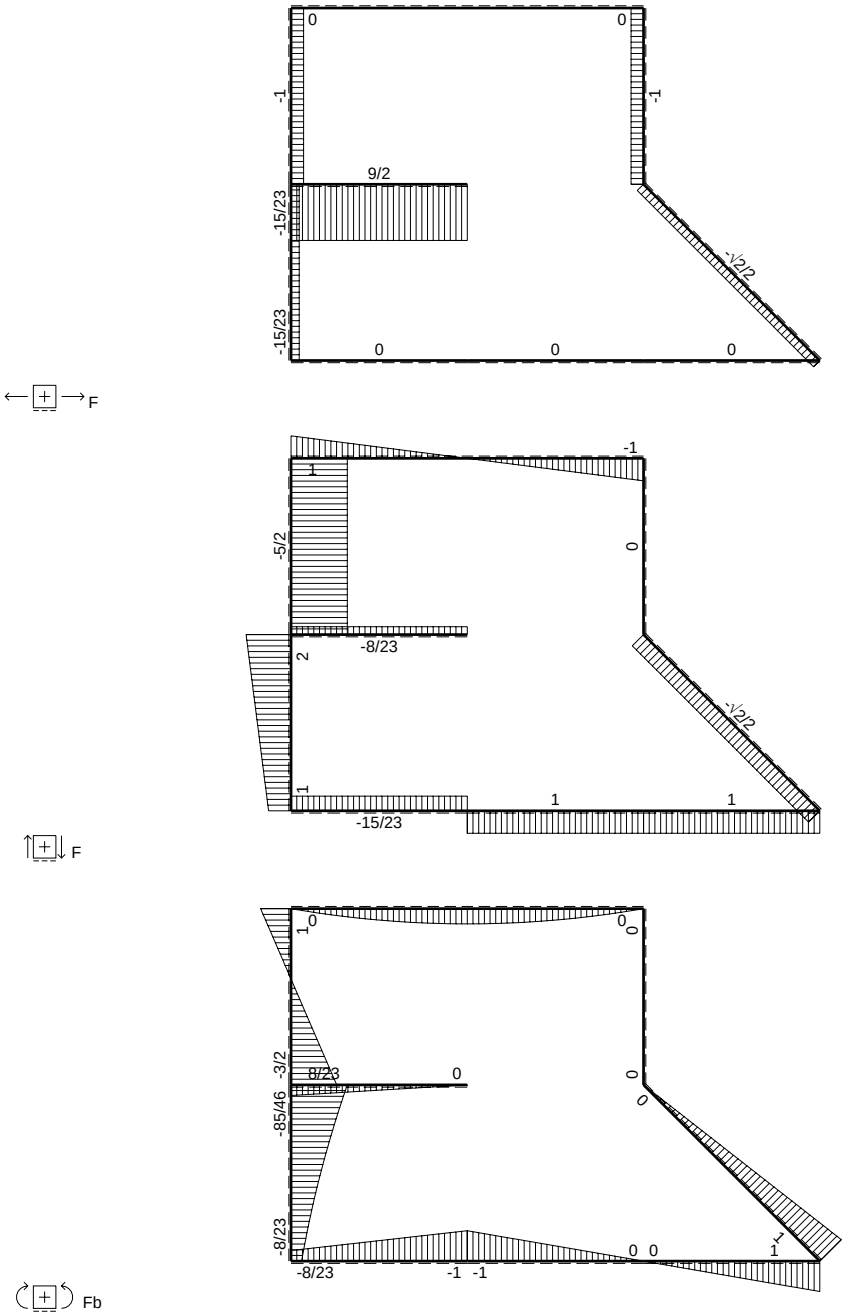
F
0
0
-1
-1
9/2
-15/23
-√2/2
-15/23
0
0
0
F
-1
1
-5/2
0
-8/23
2
-√2/2
1
1
1
-15/23
F
1
0
0
-3/2
8/23
0
-85/46
0
0
-8/23
0 0
1
-8/23
-1 -1
Fb

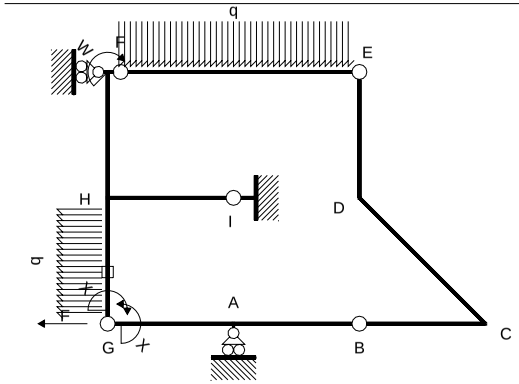

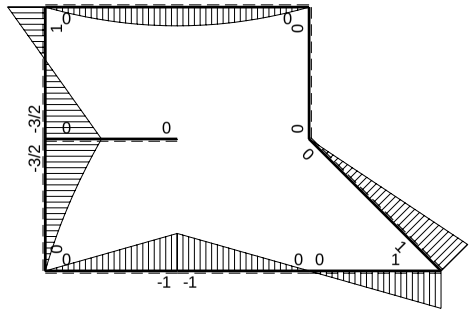

Schema di calcolo iperstatico

M_0 flessione da carichi assegnati

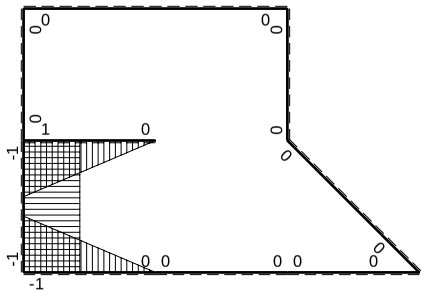

M_x flessione da iperstatica X=1

Quadro contributi PLV per iperstatica $X=W_{GA}$

→	$M_x(x)$	$M_0(x)$	M_xM_0	M_xM_x	$\int M_xM_0/EJdx$	$\int XM_xM_x/EJdx$
AB b	0	-Fb+Fx	0	0	0	0
BA b	0	Fx	0	0		
BC b	0	Fx	0	0	0	0
CB b	0	-Fb+Fx	0	0		
CD √2b	0	Fb-√2/2Fx	0	0	0	0
DE b	0	0	0	0	0	0
ED b	0	0	0	0		
EF 2b	0	$-Fx+1/2qx^2$	0	0	0	0
FE 2b	0	$Fx-1/2qx^2$	0	0		
GA b	-1+x/b	-Fx	$Fx-Fx^2/b$	$1-2x/b+x^2/b^2$	$1/6Fb^2/EJ$	1/3Xb/EJ
AG b	x/b	Fb-Fx	$Fx-Fx^2/b$	x^2/b^2		
FH b	0	Fb-5/2Fx	0	0	0	0
HF b	0	3/2Fb-5/2Fx	0	0		
HI b	1-x/b	0	0	$1-2x/b+x^2/b^2$	0	1/3Xb/EJ
IH b	-x/b	0	0	x^2/b^2		
HG b	-1	$-3/2Fb+2Fx-1/2qx^2$	$3/2Fb-2Fx+1/2Fx^2/b$	1	$2/3Fb^2/EJ$	Xb/EJ
GH b	1	$Fx+1/2qx^2$	$Fx+1/2Fx^2/b$	1		
HG	elongazione asta $N_{1HG}\varepsilon_{HG}L_{HG}$				$-Fb^2/EJ$	
A	molla nodo $-V_{1A}(V_{0A}+XV_{1A})/k_A$				$-1/2Fb^2/EJ$	1/4Xb/EJ
	totali				$-2/3Fb^2/EJ$	23/12Xb/EJ
	iperstatica $X=W_{GA}$				8/23Fb	

Sviluppi di calcolo iperstatica

$L^{XX}_{GA} = \int_o^b (1 - 2\,x/b + x^2/b^2)\ 1/EJ\ dx = [\,x - x^2/b + 1/3\,x^3/b^2\,]_o^b\ 1/EJ$

$= (\,b - b + 1/3\,b\,)\ 1/EJ = 1/3\ b/EJ$

$L^{XX}_{AG} = \int_o^b (\,x^2/b^2\,)\ 1/EJ\ dx = [1/3\,x^3/b^2\,]_o^b\ 1/EJ$

$= (1/3\,b\,)\ 1/EJ = 1/3\ b/EJ$

$L^{XX}_{HI} = \int_o^b (1 - 2\,x/b + x^2/b^2)\ 1/EJ\ dx = [\,x - x^2/b + 1/3\,x^3/b^2\,]_o^b\ 1/EJ$

$= (\,b - b + 1/3\,b\,)\ 1/EJ = 1/3\ b/EJ$

$L^{XX}_{IH} = \int_o^b (\,x^2/b^2\,)\ 1/EJ\ dx = [1/3\,x^3/b^2\,]_o^b\ 1/EJ$

$= (1/3\,b\,)\ 1/EJ = 1/3\ b/EJ$

$L^{XX}_{HG} = \int_o^b (1)\ 1/EJ\ dx = [\,x\,]_o^b\ 1/EJ$

$= (\,b\,)\ 1/EJ = b/EJ$

$L^{XX}_{GH} = \int_o^b (1)\ 1/EJ\ dx = [\,x\,]_o^b\ 1/EJ$

$= (\,b\,)\ 1/EJ = b/EJ$

$L^{Xo}_{GA} = \int_o^b (\,x/b - x^2/b^2\,)\ Fb\ 1/EJ\ dx = [1/2\,x^2/b - 1/3\,x^3/b^2\,]_o^b\ Fb\ 1/EJ$

$= (1/2\,b - 1/3\,b\,)\ Fb\ 1/EJ = 1/6\ Fb^2/EJ$

$L^{Xo}_{AG} = \int_o^b (\,x/b - x^2/b^2\,)\ Fb\ 1/EJ\ dx = [1/2\,x^2/b - 1/3\,x^3/b^2\,]_o^b\ Fb\ 1/EJ$

$= (1/2\,b - 1/3\,b\,)\ Fb\ 1/EJ = 1/6\ Fb^2/EJ$

$L^{Xo}_{HG} = \int_o^b (3/2 - 2\,x/b + 1/2\,x^2/b^2\,)\ Fb\ 1/EJ\ dx - 1\ \ (-1)\ \ (-1)\ \ Fb^2/EJ$

$= [3/2\,x - x^2/b + 1/6\,x^3/b^2\,]_o^b\ Fb\ 1/EJ\ - 1\ \ (-1)\ \ (-1)\ \ Fb^2/EJ$

$= (3/2\,b - b + 1/6\,b\,)\ Fb\ 1/EJ\ - 1\ \ (-1)\ \ (-1)\ \ Fb^2/EJ = -1/3\ \ Fb^2/EJ$

$L^{Xo}_{GH} = \int_o^b (\,x/b + 1/2\,x^2/b^2\,)\ Fb\ 1/EJ\ dx - 1\ \ (-1)\ \ (-1)\ \ Fb^2/EJ$

$= [1/2\,x^2/b + 1/6\,x^3/b^2\,]_o^b\ Fb\ 1/EJ\ - 1\ \ (-1)\ \ (-1)\ \ Fb^2/EJ$

$= (1/2\,b + 1/6\,b\,)\ Fb\ 1/EJ\ - 1\ \ (-1)\ \ (-1)\ \ Fb^2/EJ = -1/3\ \ Fb^2/EJ$

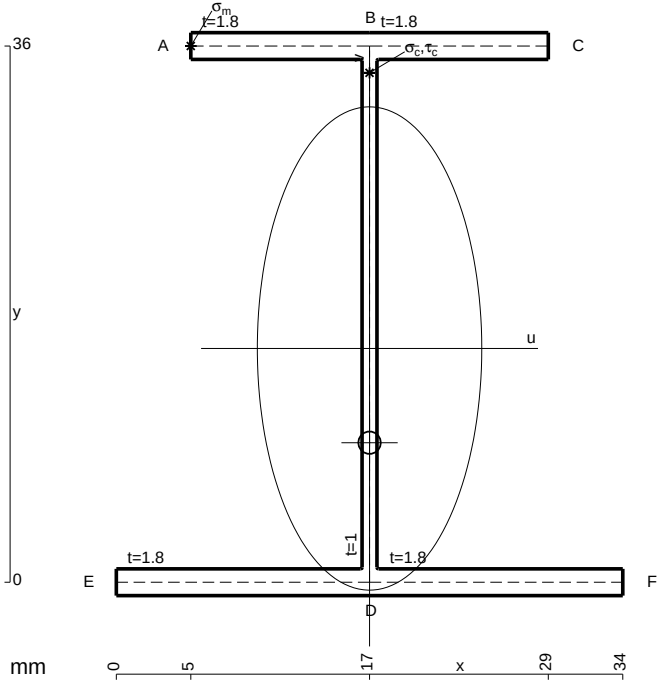

A = 140.4 mm^2
J_u = 36966. mm^4
J_v = 7969. mm^4
J_t = 124.8 mm^4
y_o = -6.325 mm
y_g = 15.69 mm
N = -520. N
T_y = -1300. N
M_x = -382200. Nmm
x_m = 5. mm
y_m = 36. mm
u_m = -12. mm
v_m = 20.31 mm
$\sigma_m = N/A - Mv/J_u$ = 206.3 N/mm^2
x_c = 17. mm
y_c = 36. mm
v_c = 20.31 mm
$\sigma_c = N/A - Mv/J_u$ = 206.3 N/mm^2
$\tau_c = TS^*/tJ_u$ = 30.85 N/mm^2
$\tau_g = TS^*/tJ_u$ = 30.85 N/mm^2
t_c = 520. mm
$\sigma_o = \sqrt{\sigma^2 + 3\tau^2}$ = 213.1 N/mm^2

ESΣ05.xxxx.166

@ Adolfo Zavelani Rossi, Politecnico di Milano, vers.27.03.13 01.12.25

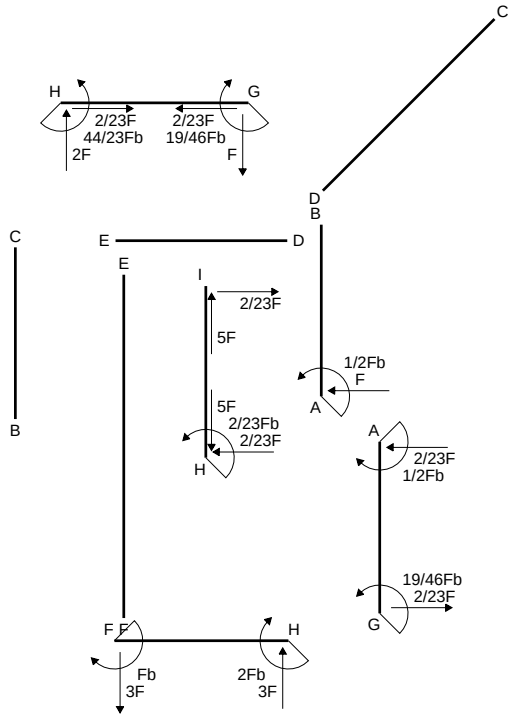
C
H
G
2/23F
44/23Fb
2F
2/23F
19/46Fb
F
D
B
C
E
D
E
I
2/23F
5F
1/2Fb
F
A
B
5F
2/23Fb
2/23F
H
A
2/23F
1/2Fb
19/46Fb
2/23F
G
F F
H
Fb
3F
2Fb
3F

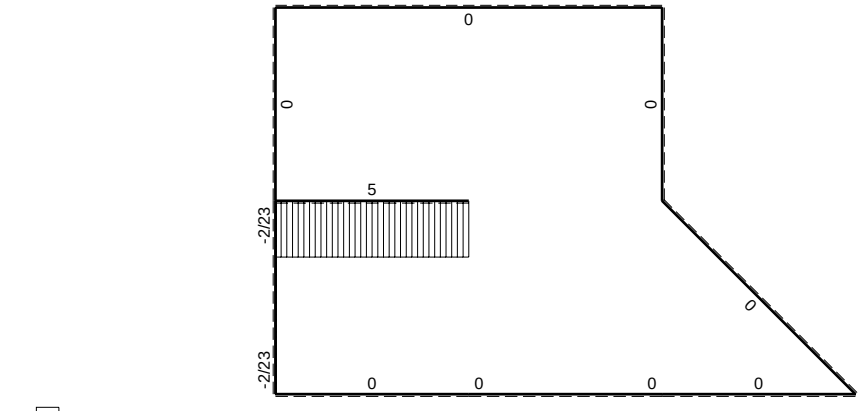
F
0
0
0
5
-2/23
-2/23
0
0
0
0
0

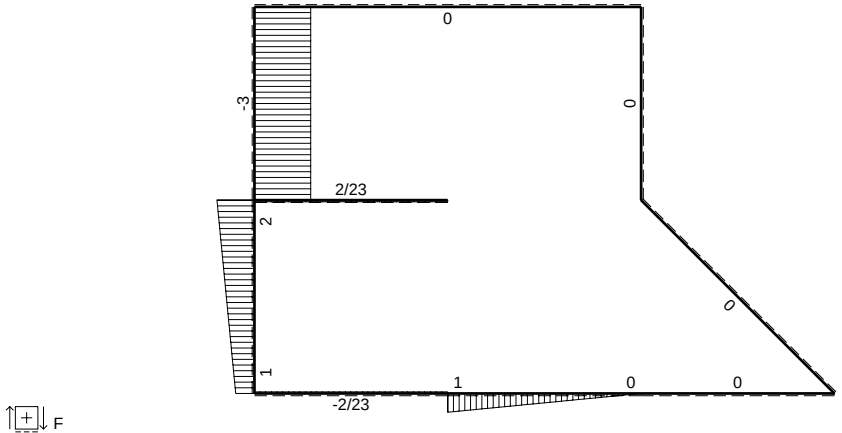
F
0
-3
0
2/23
2
1
0
-2/23
1
0
0

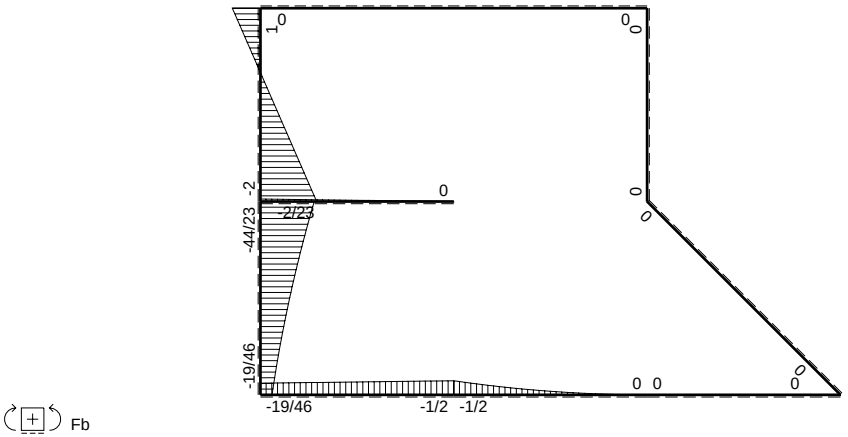
Fb
1
0
0
-2
0
-44/23
-2/23
0
0
-19/46
0 0
0
-19/46
-1/2 -1/2

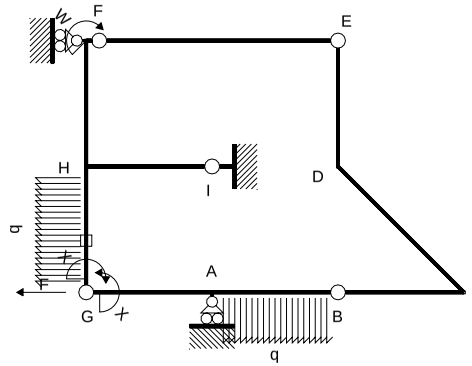

Schema di calcolo iperstatico

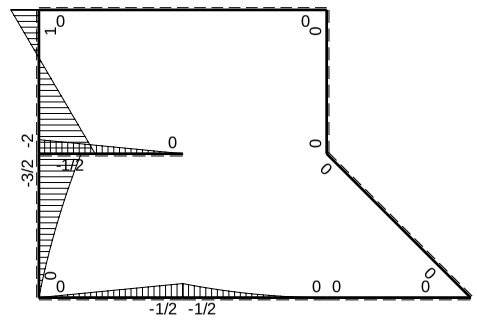

M_0 flessione da carichi assegnati

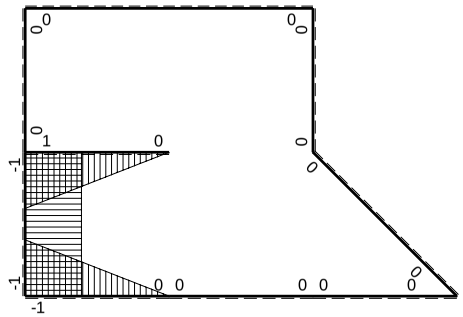

M_x flessione da iperstatica X=1

Quadro contributi PLV per iperstatica $X=W_{GA}$

→	$M_x(x)$	$M_0(x)$	M_xM_0	M_xM_x	$\int M_xM_0/EJdx$	$\int XM_xM_x/EJdx$
AB b	0	$-1/2Fb+Fx-1/2qx^2$	0	0	0	0
BA b	0	$1/2qx^2$	0	0		
BC b	0	0	0	0	0	0
CB b	0	0	0	0		
CD $\sqrt{2}$b	0	0	0	0	0	0
DE b	0	0	0	0	0	0
ED b	0	0	0	0		
EF 2b	0	0	0	0	0	0
FE 2b	0	0	0	0		
GA b	$-1+x/b$	$-1/2Fx$	$1/2Fx-1/2Fx^2/b$	$1-2x/b+x^2/b^2$	$1/12Fb^2/EJ$	$1/3Xb/EJ$
AG b	x/b	$1/2Fb-1/2Fx$	$1/2Fx-1/2Fx^2/b$	x^2/b^2		
FH b	0	$Fb-3Fx$	0	0	0	0
HF b	0	$2Fb-3Fx$	0	0		
HI b	$1-x/b$	$-1/2Fb+1/2Fx$	$-1/2Fb+Fx-1/2Fx^2/b$	$1-2x/b+x^2/b^2$	$-1/6Fb^2/EJ$	$1/3Xb/EJ$
IH b	$-x/b$	$1/2Fx$	$-1/2Fx^2/b$	x^2/b^2		
HG b	-1	$-3/2Fb+2Fx-1/2qx^2$	$3/2Fb-2Fx+1/2Fx^2/b$	1	$2/3Fb^2/EJ$	Xb/EJ
GH b	1	$Fx+1/2qx^2$	$Fx+1/2Fx^2/b$	1		
HG	elongazione asta $N_{1HG}\varepsilon_{HG}L_{HG}$				$-Fb^2/EJ$	
A	molla nodo $-V_{1A}(V_{0A}+XV_{1A})/k_A$				$-3/8Fb^2/EJ$	$1/4Xb/EJ$
	totali				$-19/24Fb^2/EJ$	$23/12Xb/EJ$
	iperstatica $X=W_{GA}$				19/46Fb	

Sviluppi di calcolo iperstatica

$L^{XX}_{GA} = \int_o^b (1 - 2\,x/b + x^2/b^2)\ 1/EJ\ dx = [\ x - x^2/b + 1/3\ x^3/b^2\ ]_o^b\ 1/EJ$

$= (\ b - b + 1/3\ b\ )\ 1/EJ\ = 1/3\ b/EJ$

$L^{XX}_{AG} = \int_o^b (\ x^2/b^2\ )\ 1/EJ\ dx = [1/3\ x^3/b^2\ ]_o^b\ 1/EJ$

$= (1/3\ b\ )\ 1/EJ\ = 1/3\ b/EJ$

$L^{XX}_{HI} = \int_o^b (1 - 2\,x/b + x^2/b^2)\ 1/EJ\ dx = [\ x - x^2/b + 1/3\ x^3/b^2\ ]_o^b\ 1/EJ$

$= (\ b - b + 1/3\ b\ )\ 1/EJ\ = 1/3\ b/EJ$

$L^{XX}_{IH} = \int_o^b (\ x^2/b^2\ )\ 1/EJ\ dx = [1/3\ x^3/b^2\ ]_o^b\ 1/EJ$

$= (1/3\ b\ )\ 1/EJ\ = 1/3\ b/EJ$

$L^{XX}_{HG} = \int_o^b (1\ )\ 1/EJ\ dx = [\ x\ ]_o^b\ 1/EJ$

$= (\ b\ )\ 1/EJ\ =\ b/EJ$

$L^{XX}_{GH} = \int_o^b (1\ )\ 1/EJ\ dx = [\ x\ ]_o^b\ 1/EJ$

$= (\ b\ )\ 1/EJ\ =\ b/EJ$

$L^{Xo}_{GA} = \int_o^b (1/2\ x/b - 1/2\ x^2/b^2\ )\ Fb\ 1/EJ\ dx = [1/4\ x^2/b - 1/6\ x^3/b^2\ ]_o^b\ Fb\ 1/EJ$

$= (1/4\ b - 1/6\ b\ )\ Fb\ 1/EJ\ = 1/12\ \ Fb^2/EJ$

$L^{Xo}_{AG} = \int_o^b (1/2\ x/b - 1/2\ x^2/b^2\ )\ Fb\ 1/EJ\ dx = [1/4\ x^2/b - 1/6\ x^3/b^2\ ]_o^b\ Fb\ 1/EJ$

$= (1/4\ b - 1/6\ b\ )\ Fb\ 1/EJ\ = 1/12\ \ Fb^2/EJ$

$L^{Xo}_{HI} = \int_o^b (-1/2 + x/b - 1/2\ x^2/b^2\ )\ Fb\ 1/EJ\ dx = [-1/2\ x + 1/2\ x^2/b - 1/6\ x^3/b^2\ ]_o^b\ Fb\ 1/EJ$

$= (-1/2\ b + 1/2\ b - 1/6\ b\ )\ Fb\ 1/EJ\ = -1/6\ \ Fb^2/EJ$

$L^{Xo}_{IH} = \int_o^b (-1/2\ x^2/b^2\ )\ Fb\ 1/EJ\ dx = [-1/6\ x^3/b^2\ ]_o^b\ Fb\ 1/EJ$

$= (-1/6\ b\ )\ Fb\ 1/EJ\ = -1/6\ \ Fb^2/EJ$

$L^{Xo}_{HG} = \int_o^b (3/2 - 2\,x/b + 1/2\ x^2/b^2\ )\ Fb\ 1/EJ\ dx - 1\ \ (-1)\ \ (-1)\ \ Fb^2/EJ$

$= [3/2\ x - x^2/b + 1/6\ x^3/b^2\ ]_o^b\ Fb\ 1/EJ\ - 1\ \ (-1)\ \ (-1)\ \ Fb^2/EJ$

$= (3/2\ b - b + 1/6\ b\ )\ Fb\ 1/EJ\ - 1\ \ (-1)\ \ (-1)\ \ Fb^2/EJ = -1/3\ \ Fb^2/EJ$

$L^{Xo}_{GH} = \int_o^b (\ x/b + 1/2\ x^2/b^2\ )\ Fb\ 1/EJ\ dx - 1\ \ (-1)\ \ (-1)\ \ Fb^2/EJ$

$= [1/2\ x^2/b + 1/6\ x^3/b^2\ ]_o^b\ Fb\ 1/EJ\ - 1\ \ (-1)\ \ (-1)\ \ Fb^2/EJ$

$= (1/2\ b + 1/6\ b\ )\ Fb\ 1/EJ\ - 1\ \ (-1)\ \ (-1)\ \ Fb^2/EJ = -1/3\ \ Fb^2/EJ$

PROCEDIMENTO E RISULTATI 238444 ESΣ05.xxxx.167

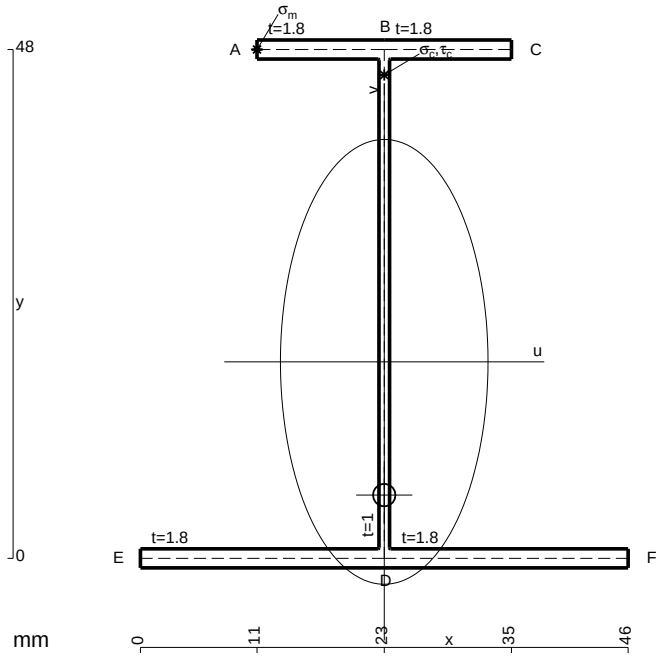

A = 174. mm^2
J_u = 76601. mm^4
J_v = 16674. mm^4
J_t = 152.1 mm^4
y_o = -12.57 mm
y_g = 18.54 mm
T_y = -1230. N
M_x = -565800. Nmm
x_m = 11. mm
y_m = 48. mm
u_m = -12. mm
v_m = 29.46 mm
$\sigma_m = -Mv/J_u$ = 217.6 N/mm^2
x_c = 23. mm
y_c = 48. mm
v_c = 29.46 mm
$\sigma_c = -Mv/J_u$ = 217.6 N/mm^2
$\tau_c = TS^*/tJ_u$ = 20.44 N/mm^2
$\tau_g = TS^*/tJ_u$ = 20.44 N/mm^2
t_c = 410. mm
$\sigma_o = \sqrt{\sigma^2 + 3\tau^2}$ = 220.5 N/mm^2

@ Adolfo Zavelani Rossi, Politecnico di Milano, vers.27.03.13 01.12.25

ESΣ05.xxxx.167

@ Adolfo Zavelani Rossi, Politecnico di Milano, vers.27.03.13 01.12.25

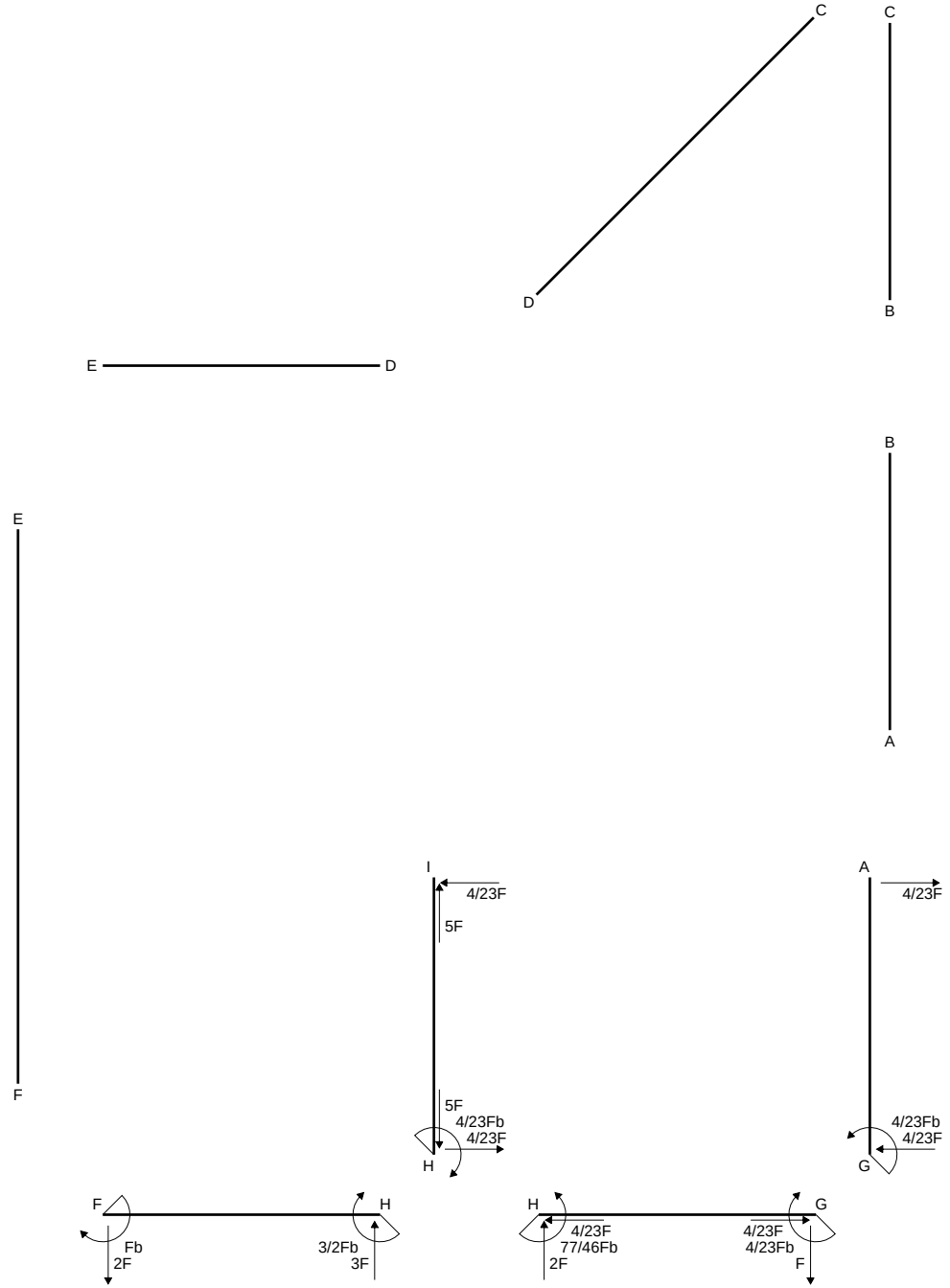
C
C
D
B
E
D
B
E
A
F
I
4/23F
5F
5F
4/23Fb
4/23F
H
A
4/23F
4/23Fb
4/23F
G
F
H
Fb
2F
3/2Fb
3F
H
G
4/23F
77/46Fb
2F
4/23F
4/23Fb
F

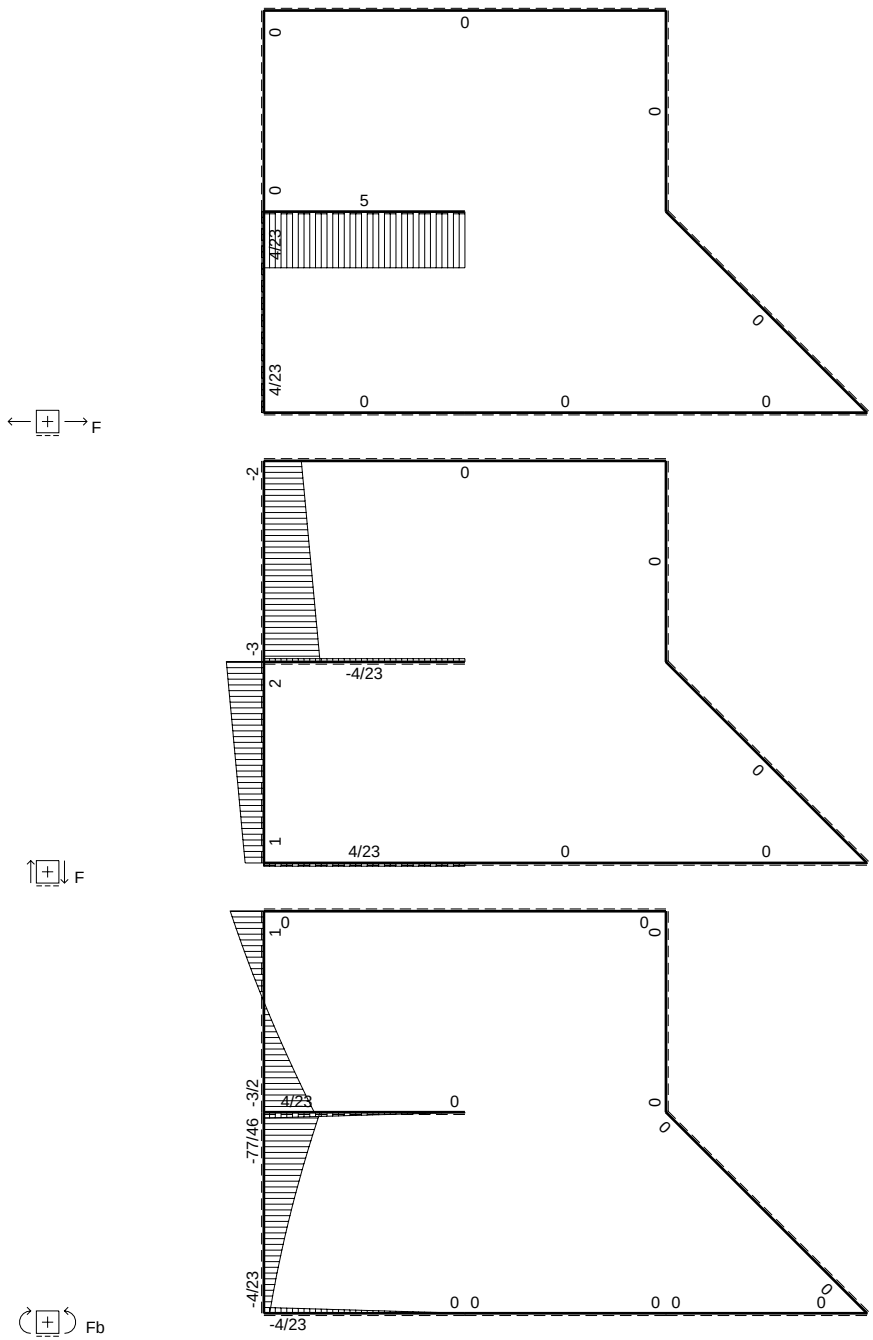
0
0
0
0
5
4/23
0
4/23
0
0
0
F
-2
0
0
-3
-4/23
2
0
1
4/23
0
0
F
1
0
0
-3/2
4/23
0
-77/46
0
0
-4/23
0 0
0 0
0
-4/23
Fb

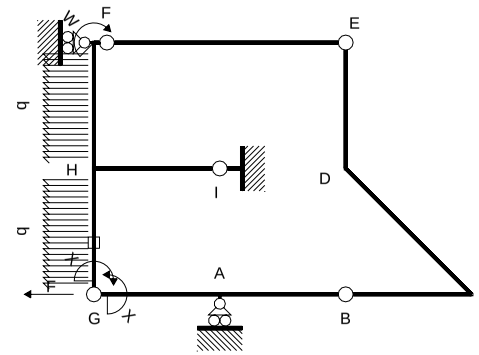

Schema di calcolo iperstatico

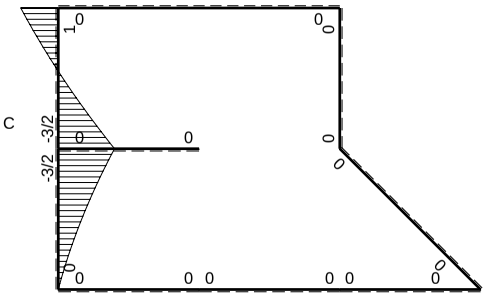

M_0 flessione da carichi assegnati

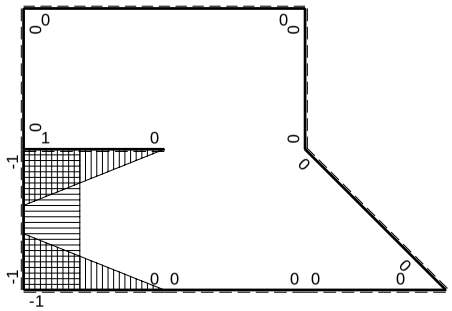

M_x flessione da iperstatica X=1

Quadro contributi PLV per iperstatica $X=W_{GA}$

→	$M_x(x)$	$M_0(x)$	M_xM_0	M_xM_x	$\int M_xM_0/EJdx$	$\int XM_xM_x/EJdx$
AB b	0	0	0	0	0	0
BA b	0	0	0	0		
BC b	0	0	0	0	0	0
CB b	0	0	0	0		
CD √2b	0	0	0	0	0	0
DE b	0	0	0	0	0	0
ED b	0	0	0	0		
EF 2b	0	0	0	0	0	0
FE 2b	0	0	0	0		
GA b	-1+x/b	0	0	$1-2x/b+x^2/b^2$	0	1/3Xb/EJ
AG b	x/b	0	0	x^2/b^2		
FH b	0	$Fb-2Fx-1/2qx^2$	0	0	0	0
HF b	0	$3/2Fb-3Fx+1/2qx^2$	0	0		
HI b	1-x/b	0	0	$1-2x/b+x^2/b^2$	0	1/3Xb/EJ
IH b	-x/b	0	0	x^2/b^2		
HG b	-1	$-3/2Fb+2Fx-1/2qx^2$	$3/2Fb-2Fx+1/2Fx^2/b$	1	$2/3Fb^2/EJ$	Xb/EJ
GH b	1	$Fx+1/2qx^2$	$Fx+1/2Fx^2/b$	1		
HG	elongazione asta $N_{1HG}\varepsilon_{HG}L_{HG}$				$-Fb^2/EJ$	
A	molla nodo $-V_{1A}(V_{0A}+XV_{1A})/k_A$					1/4Xb/EJ
	totali				$-1/3Fb^2/EJ$	23/12Xb/EJ
	iperstatica $X=W_{GA}$				4/23Fb	

Sviluppi di calcolo iperstatica

$L^{XX}_{GA} = \int_o^b (1 - 2\,x/b + x^2/b^2)\ 1/EJ\ dx = [\ x - x^2/b + 1/3\ x^3/b^2\ ]_o^b\ 1/EJ$

$= (\ b - b + 1/3\ b\ )\ 1/EJ\ = 1/3\ b/EJ$

$L^{XX}_{AG} = \int_o^b (\ x^2/b^2\ )\ 1/EJ\ dx = [1/3\ x^3/b^2\ ]_o^b\ 1/EJ$

$= (1/3\ b\ )\ 1/EJ\ = 1/3\ b/EJ$

$L^{XX}_{HI} = \int_o^b (1 - 2\,x/b + x^2/b^2)\ 1/EJ\ dx = [\ x - x^2/b + 1/3\ x^3/b^2\ ]_o^b\ 1/EJ$

$= (\ b - b + 1/3\ b\ )\ 1/EJ\ = 1/3\ b/EJ$

$L^{XX}_{IH} = \int_o^b (\ x^2/b^2\ )\ 1/EJ\ dx = [1/3\ x^3/b^2\ ]_o^b\ 1/EJ$

$= (1/3\ b\ )\ 1/EJ\ = 1/3\ b/EJ$

$L^{XX}_{HG} = \int_o^b (1)\ 1/EJ\ dx = [\ x\ ]_o^b\ 1/EJ$

$= (\ b\ )\ 1/EJ\ =\ b/EJ$

$L^{XX}_{GH} = \int_o^b (1)\ 1/EJ\ dx = [\ x\ ]_o^b\ 1/EJ$

$= (\ b\ )\ 1/EJ\ =\ b/EJ$

$L^{Xo}_{HG} = \int_o^b (3/2 - 2\,x/b + 1/2\ x^2/b^2)\ Fb\ 1/EJ\ dx - 1\ \ (-1)\ \ (-1)\ \ Fb^2/EJ$

$= [3/2\ x - x^2/b + 1/6\ x^3/b^2\ ]_o^b\ Fb\ 1/EJ\ - 1\ \ (-1)\ \ (-1)\ \ Fb^2/EJ$

$= (3/2\ b - b + 1/6\ b\ )\ Fb\ 1/EJ\ - 1\ \ (-1)\ \ (-1)\ \ Fb^2/EJ = -1/3\ \ Fb^2/EJ$

$L^{Xo}_{GH} = \int_o^b (\ x/b + 1/2\ x^2/b^2\ )\ Fb\ 1/EJ\ dx - 1\ \ (-1)\ \ (-1)\ \ Fb^2/EJ$

$= [1/2\ x^2/b + 1/6\ x^3/b^2\ ]_o^b\ Fb\ 1/EJ\ - 1\ \ (-1)\ \ (-1)\ \ Fb^2/EJ$

$= (1/2\ b + 1/6\ b\ )\ Fb\ 1/EJ\ - 1\ \ (-1)\ \ (-1)\ \ Fb^2/EJ = -1/3\ \ Fb^2/EJ$

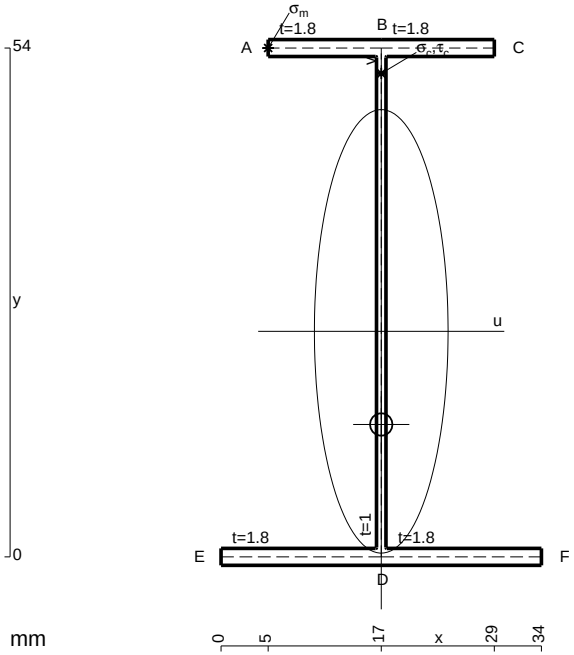

A = 158.4 mm^2
J_u = 87739. mm^4
J_v = 7969. mm^4
J_t = 130.8 mm^4
y_o = -9.881 mm
y_g = 23.93 mm
T_y = -1620. N
M_x = -664200. Nmm
x_m = 5. mm
y_m = 54. mm
u_m = -12. mm
v_m = 30.07 mm
$\sigma_m = -Mv/J_u$ = 227.6 N/mm^2
x_c = 17. mm
y_c = 54. mm
v_c = 30.07 mm
$\sigma_c = -Mv/J_u$ = 227.6 N/mm^2
$\tau_c = TS^*/tJ_u$ = 23.98 N/mm^2
$\tau_g = TS^*/tJ_u$ = 23.98 N/mm^2
t_c = 540. mm
$\sigma_o = \sqrt{\sigma^2 + 3\tau^2}$ = 231.4 N/mm^2

ESΣ05.xxxx.168

@ Adolfo Zavelani Rossi, Politecnico di Milano, vers.27.03.13 01.12.25

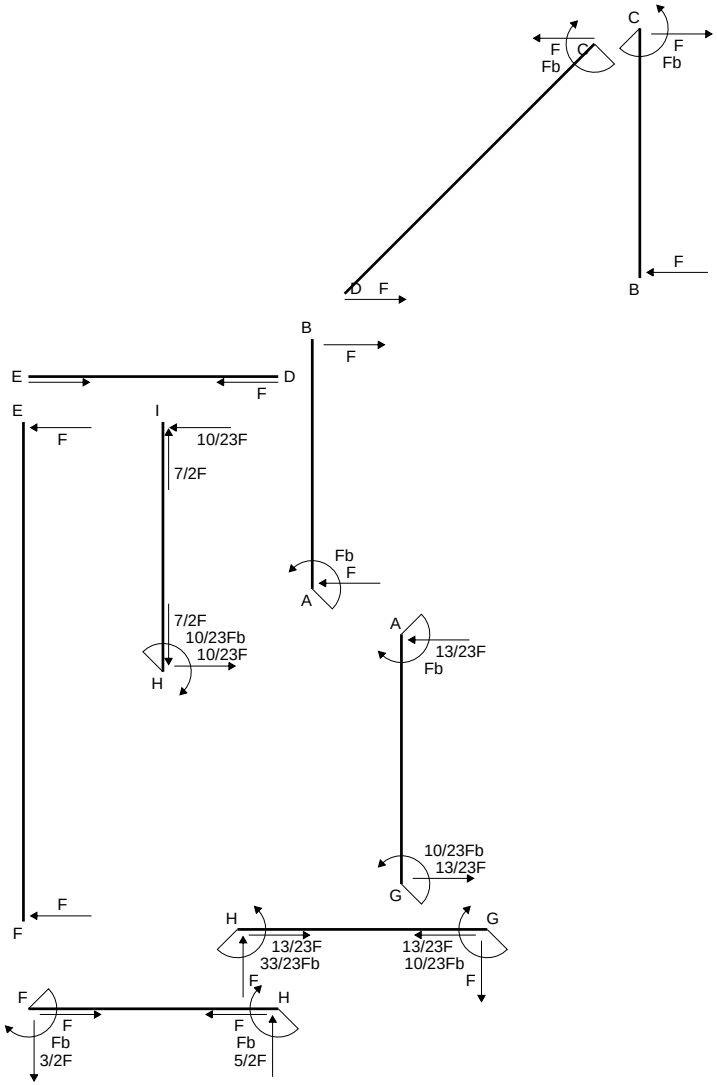
C
F
Fb
C
F
Fb
F
D
F
B
F
B
E
D
F
E
F
I
10/23F
7/2F
Fb
F
A
7/2F
10/23Fb
10/23F
H
A
13/23F
Fb
10/23Fb
13/23F
G
F
F
H
G
13/23F
33/23Fb
13/23F
10/23Fb
F
F
H
F
F
Fb
3/2F
F
Fb
5/2F

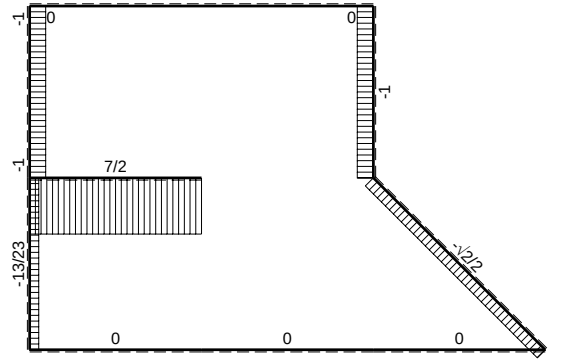
-1
0
0
-1
-1
7/2
-13/23
-√2/2
0
0
0

F

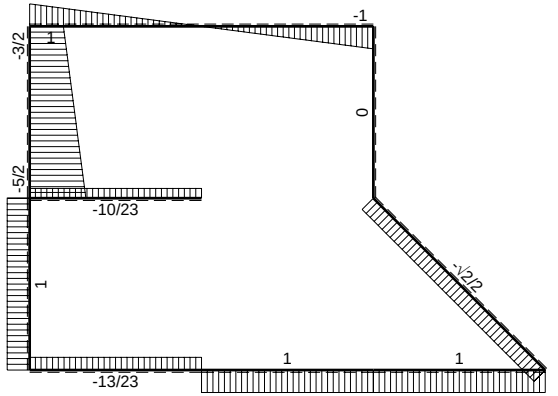
-1
-3/2
1
0
-5/2
-10/23
-√2/2
1
1
1
-13/23

F

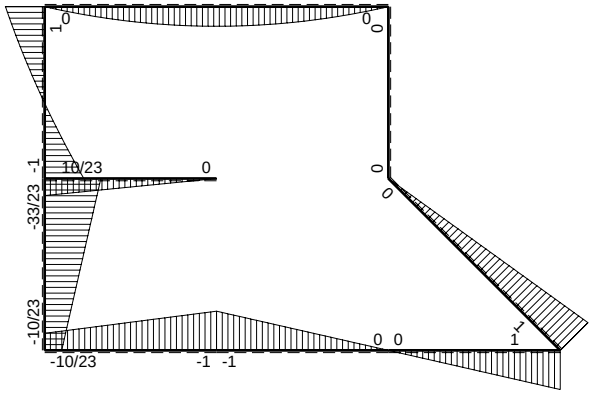
1
0
0
0
-1
-33/23
10/23
0
0
-10/23
0 0
1
-10/23
-1 -1

Fb

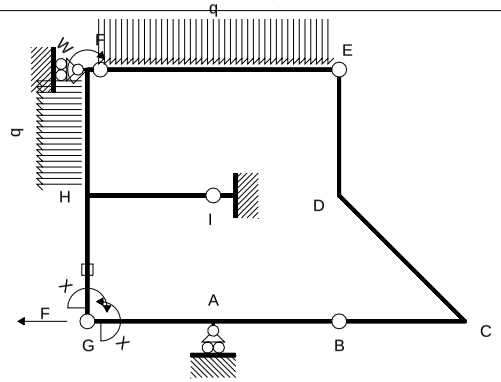

Schema di calcolo iperstatico

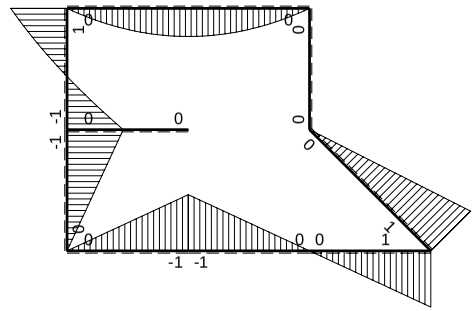

M_0 flessione da carichi assegnati

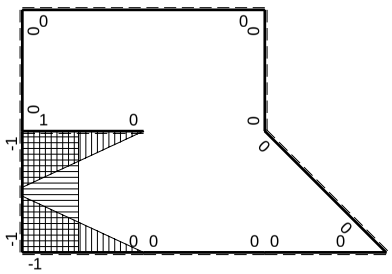

M_x flessione da iperstatica X=1

Quadro contributi PLV per iperstatica $X=W_{GA}$

→	$M_x(x)$	$M_o(x)$	M_xM_o	M_xM_x	$\int M_xM_o/EJdx$	$\int XM_xM_x/EJdx$
AB b	0	-Fb+Fx	0	0	0	0
BA b	0	Fx	0	0		
BC b	0	Fx	0	0	0	0
CB b	0	-Fb+Fx	0	0		
CD √2b	0	Fb-√2/2Fx	0	0	0	0
DE b	0	0	0	0	0	0
ED b	0	0	0	0		
EF 2b	0	$-Fx+1/2qx^2$	0	0	0	0
FE 2b	0	$Fx-1/2qx^2$	0	0		
GA b	-1+x/b	-Fx	$Fx-Fx^2/b$	$1-2x/b+x^2/b^2$	$1/6Fb^2/EJ$	$1/3Xb/EJ$
AG b	x/b	Fb-Fx	$Fx-Fx^2/b$	x^2/b^2		
FH b	0	$Fb-3/2Fx-1/2qx^2$	0	0	0	0
HF b	0	$Fb-5/2Fx+1/2qx^2$	0	0		
HI b	1-x/b	0	0	$1-2x/b+x^2/b^2$	0	$1/3Xb/EJ$
IH b	-x/b	0	0	x^2/b^2		
HG b	-1	-Fb+Fx	Fb-Fx	1	$1/2Fb^2/EJ$	Xb/EJ
GH b	1	Fx	Fx	1		
HG	elongazione asta $N_{1HG}\varepsilon_{HG}L_{HG}$				$-Fb^2/EJ$	
A	molla nodo $-V_{1A}(V_{0A}+XV_{1A})/k_A$				$-1/2Fb^2/EJ$	$1/4Xb/EJ$
	totali				$-5/6Fb^2/EJ$	$23/12Xb/EJ$
	iperstatica $X=W_{GA}$				10/23Fb	

Sviluppi di calcolo iperstatica

$L^{XX}_{GA} = \int_o^b (1 - 2\,x/b + x^2/b^2)\ 1/EJ\ dx = [\,x - x^2/b + 1/3\,x^3/b^2\,]_o^b\ 1/EJ$

$= (\,b - b + 1/3\,b\,)\ 1/EJ\ = 1/3\ b/EJ$

$L^{XX}_{AG} = \int_o^b (\,x^2/b^2\,)\ 1/EJ\ dx = [1/3\,x^3/b^2\,]_o^b\ 1/EJ$

$= (1/3\,b\,)\ 1/EJ\ = 1/3\ b/EJ$

$L^{XX}_{HI} = \int_o^b (1 - 2\,x/b + x^2/b^2)\ 1/EJ\ dx = [\,x - x^2/b + 1/3\,x^3/b^2\,]_o^b\ 1/EJ$

$= (\,b - b + 1/3\,b\,)\ 1/EJ\ = 1/3\ b/EJ$

$L^{XX}_{IH} = \int_o^b (\,x^2/b^2\,)\ 1/EJ\ dx = [1/3\,x^3/b^2\,]_o^b\ 1/EJ$

$= (1/3\,b\,)\ 1/EJ\ = 1/3\ b/EJ$

$L^{XX}_{HG} = \int_o^b (1)\ 1/EJ\ dx = [\,x\,]_o^b\ 1/EJ$

$= (\,b\,)\ 1/EJ\ = b/EJ$

$L^{XX}_{GH} = \int_o^b (1)\ 1/EJ\ dx = [\,x\,]_o^b\ 1/EJ$

$= (\,b\,)\ 1/EJ\ = b/EJ$

$L^{Xo}_{GA} = \int_o^b (\,x/b - x^2/b^2\,)\ Fb\ 1/EJ\ dx = [1/2\,x^2/b - 1/3\,x^3/b^2\,]_o^b\ Fb\ 1/EJ$

$= (1/2\,b - 1/3\,b\,)\ Fb\ 1/EJ\ = 1/6\ Fb^2/EJ$

$L^{Xo}_{AG} = \int_o^b (\,x/b - x^2/b^2\,)\ Fb\ 1/EJ\ dx = [1/2\,x^2/b - 1/3\,x^3/b^2\,]_o^b\ Fb\ 1/EJ$

$= (1/2\,b - 1/3\,b\,)\ Fb\ 1/EJ\ = 1/6\ Fb^2/EJ$

$L^{Xo}_{HG} = \int_o^b (1 - x/b)\ Fb\ 1/EJ\ dx - 1\ \ (-1)\ \ (-1)\ \ Fb^2/EJ = [\,x - 1/2\,x^2/b\,]_o^b\ Fb\ 1/EJ\ - 1\ \ (-1)\ \ (-1)\ \ Fb^2/EJ$

$= (\,b - 1/2\,b\,)\ Fb\ 1/EJ\ - 1\ \ (-1)\ \ (-1)\ \ Fb^2/EJ = -1/2\ \ Fb^2/EJ$

$L^{Xo}_{GH} = \int_o^b (\,x/b\,)\ Fb\ 1/EJ\ dx - 1\ \ (-1)\ \ (-1)\ \ Fb^2/EJ = [1/2\,x^2/b\,]_o^b\ Fb\ 1/EJ\ - 1\ \ (-1)\ \ (-1)\ \ Fb^2/EJ$

$= (1/2\,b\,)\ Fb\ 1/EJ\ - 1\ \ (-1)\ \ (-1)\ \ Fb^2/EJ = -1/2\ \ Fb^2/EJ$

PROCEDIMENTO E RISULTATI 238214 ESΣ05.xxxx.169

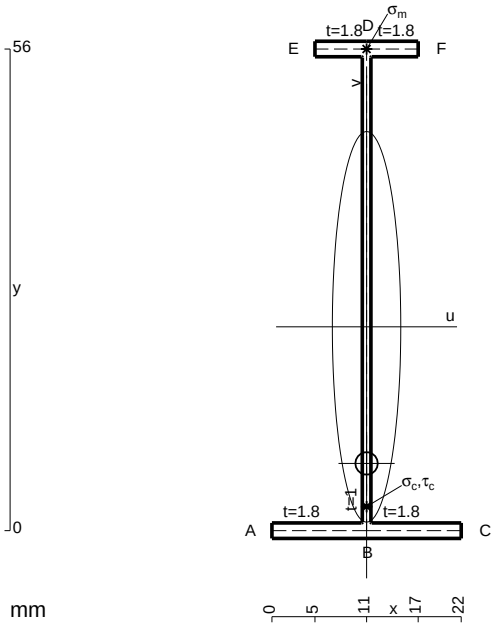

A = 117.2 mm^2
J_u = 60448. mm^4
J_v = 1856. mm^4
J_t = 84.76 mm^4
y_o = -15.88 mm
y_g = 23.7 mm
N = -500. N
T_y = -1250. N
M_x = -455000. Nmm
x_m = 11. mm
y_m = 56. mm
v_m = 32.3 mm
$\sigma_m = N/A - Mv/J_u$ = 238.9 N/mm^2
x_c = 11. mm
v_c = -23.7 mm
$\sigma_c = N/A - Mv/J_u$ = -182.7 N/mm^2
$\tau_c = TS^*/tJ_u$ = 19.41 N/mm^2
$\tau_g = TS^*/tJ_u$ = 19.41 N/mm^2
t_c = 500. mm
$\sigma_o = \sqrt{\sigma^2 + 3\tau^2}$ = 185.7 N/mm^2

@ Adolfo Zavelani Rossi, Politecnico di Milano, vers.27.03.13 01.12.25

ESΣ05.xxxx.169

@ Adolfo Zavelani Rossi, Politecnico di Milano, vers.27.03.13 01.12.25

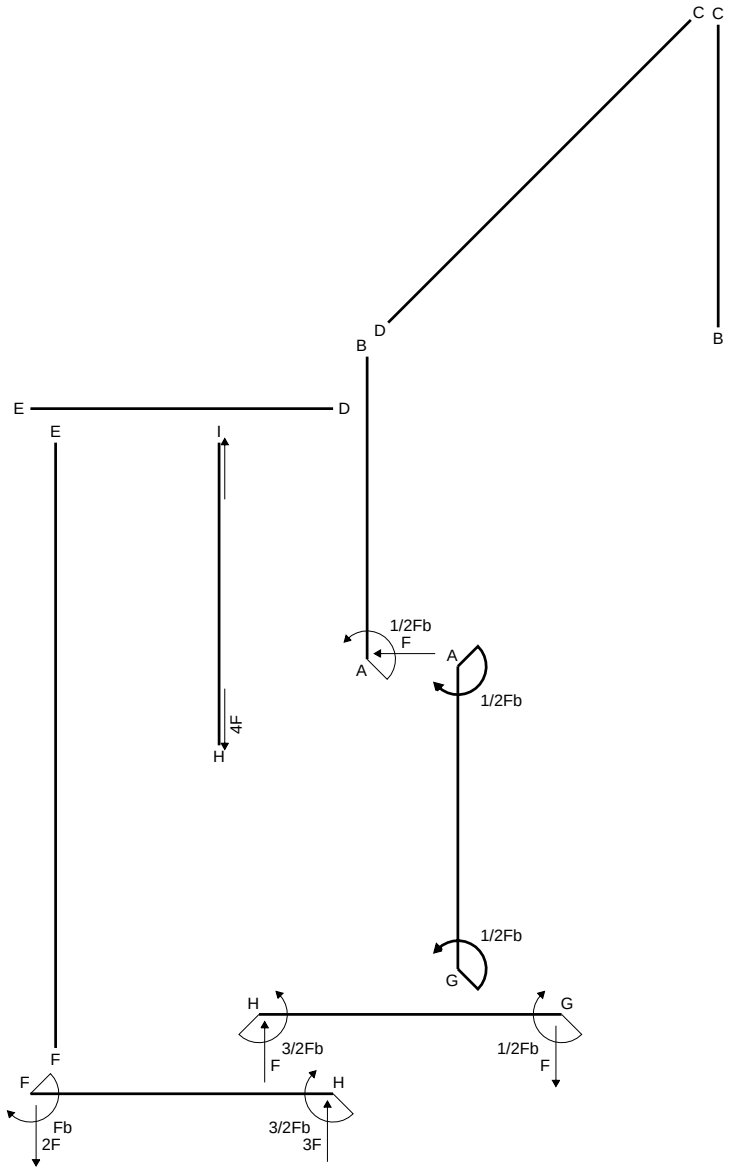
C C
D
B
B
E
D
E
I
4F
H
1/2Fb
F
A
A
1/2Fb
1/2Fb
G
H
G
3/2Fb
F
1/2Fb
F
F
F
H
Fb
2F
3/2Fb
3F

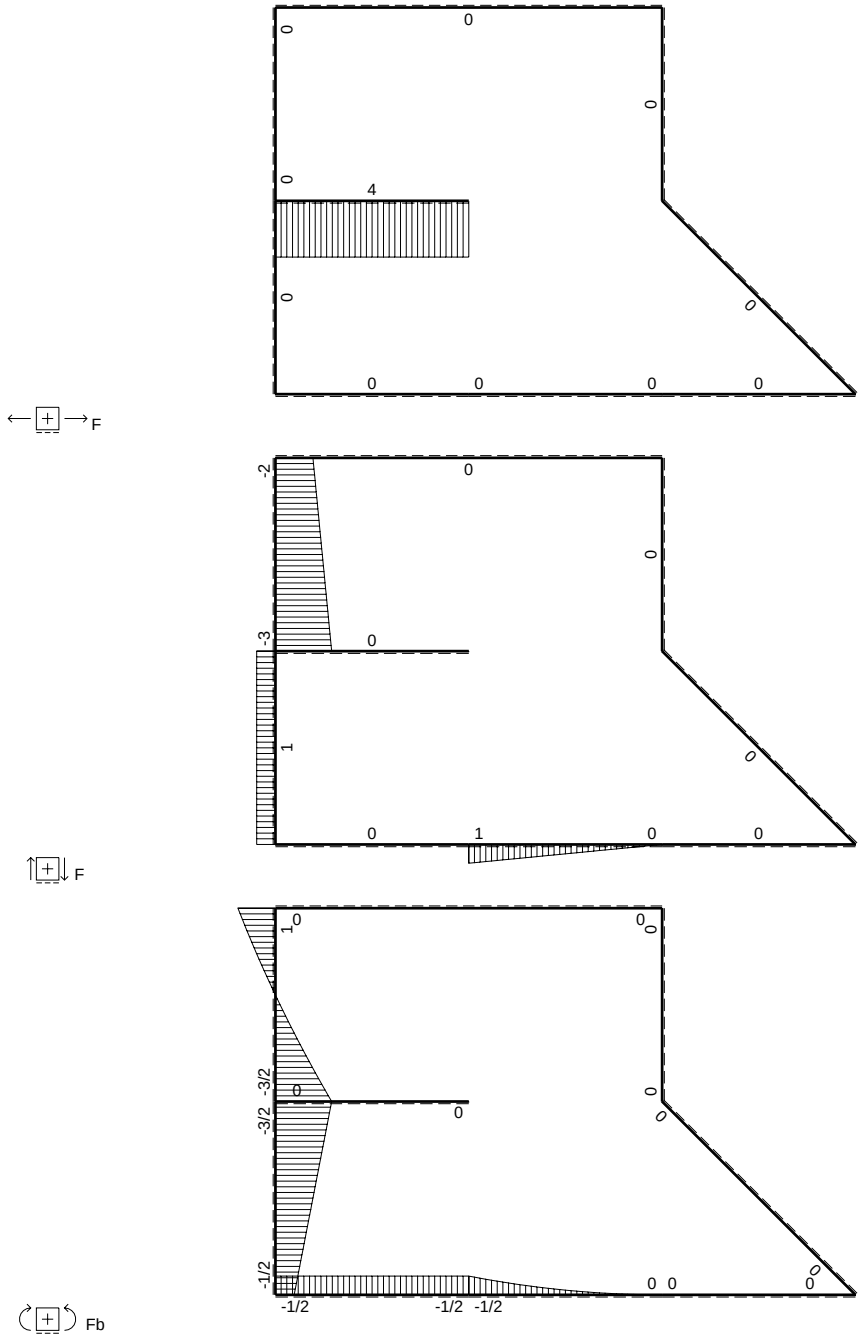
F
F
Fb

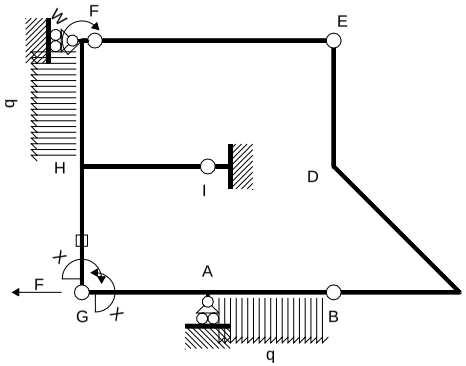

Schema di calcolo iperstatico

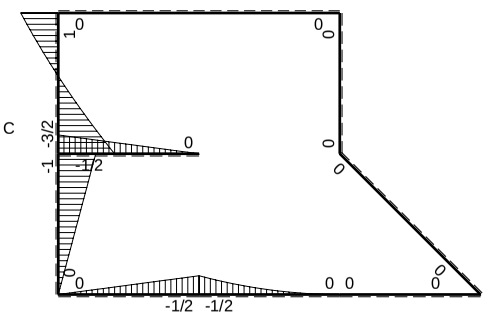

M_0 flessione da carichi assegnati

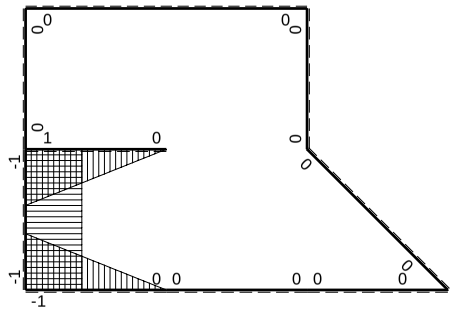

M_x flessione da iperstatica X=1

Quadro contributi PLV per iperstatica $X=W_{GA}$

→	$M_x(x)$	$M_0(x)$	M_xM_0	M_xM_x	$\int M_xM_0/EJdx$	$\int XM_xM_x/EJdx$
AB b	0	$-1/2Fb+Fx-1/2qx^2$	0	0	0	0
BA b	0	$1/2qx^2$	0	0		
BC b	0	0	0	0	0	0
CB b	0	0	0	0		
CD √2b	0	0	0	0	0	0
DE b	0	0	0	0	0	0
ED b	0	0	0	0		
EF 2b	0	0	0	0	0	0
FE 2b	0	0	0	0		
GA b	$-1+x/b$	$-1/2Fx$	$1/2Fx-1/2Fx^2/b$	$1-2x/b+x^2/b^2$	$1/12Fb^2/EJ$	$1/3Xb/EJ$
AG b	x/b	$1/2Fb-1/2Fx$	$1/2Fx-1/2Fx^2/b$	x^2/b^2		
FH b	0	$Fb-2Fx-1/2qx^2$	0	0	0	0
HF b	0	$3/2Fb-3Fx+1/2qx^2$	0	0		
HI b	$1-x/b$	$-1/2Fb+1/2Fx$	$-1/2Fb+Fx-1/2Fx^2/b$	$1-2x/b+x^2/b^2$	$-1/6Fb^2/EJ$	$1/3Xb/EJ$
IH b	$-x/b$	$1/2Fx$	$-1/2Fx^2/b$	x^2/b^2		
HG b	-1	$-Fb+Fx$	$Fb-Fx$	1	$1/2Fb^2/EJ$	Xb/EJ
GH b	1	Fx	Fx	1		
HG	elongazione asta $N_{1HG}\varepsilon_{HG}L_{HG}$				$-Fb^2/EJ$	
A	molla nodo $-V_{1A}(V_{0A}+XV_{1A})/k_A$				$-3/8Fb^2/EJ$	$1/4Xb/EJ$
	totali				$-23/24Fb^2/EJ$	$23/12Xb/EJ$
	iperstatica $X=W_{GA}$				$1/2Fb$	

Sviluppi di calcolo iperstatica

$L^{XX}_{GA} = \int_o^b (1 - 2\,x/b + x^2/b^2)\ 1/EJ\ dx = [\ x - x^2/b + 1/3\ x^3/b^2\ ]_o^b\ 1/EJ$

$= (\ b - b + 1/3\ b\ )\ 1/EJ\ = 1/3\ b/EJ$

$L^{XX}_{AG} = \int_o^b (\ x^2/b^2\ )\ 1/EJ\ dx = [1/3\ x^3/b^2\ ]_o^b\ 1/EJ$

$= (1/3\ b\ )\ 1/EJ\ = 1/3\ b/EJ$

$L^{XX}_{HI} = \int_o^b (1 - 2\,x/b + x^2/b^2)\ 1/EJ\ dx = [\ x - x^2/b + 1/3\ x^3/b^2\ ]_o^b\ 1/EJ$

$= (\ b - b + 1/3\ b\ )\ 1/EJ\ = 1/3\ b/EJ$

$L^{XX}_{IH} = \int_o^b (\ x^2/b^2\ )\ 1/EJ\ dx = [1/3\ x^3/b^2\ ]_o^b\ 1/EJ$

$= (1/3\ b\ )\ 1/EJ\ = 1/3\ b/EJ$

$L^{XX}_{HG} = \int_o^b (1\ )\ 1/EJ\ dx = [\ x\ ]_o^b\ 1/EJ$

$= (\ b\ )\ 1/EJ\ =\ b/EJ$

$L^{XX}_{GH} = \int_o^b (1\ )\ 1/EJ\ dx = [\ x\ ]_o^b\ 1/EJ$

$= (\ b\ )\ 1/EJ\ =\ b/EJ$

$L^{Xo}_{GA} = \int_o^b (1/2\ x/b - 1/2\ x^2/b^2\ )\ Fb\ 1/EJ\ dx = [1/4\ x^2/b - 1/6\ x^3/b^2\ ]_o^b\ Fb\ 1/EJ$

$= (1/4\ b - 1/6\ b\ )\ Fb\ 1/EJ\ = 1/12\ Fb^2/EJ$

$L^{Xo}_{AG} = \int_o^b (1/2\ x/b - 1/2\ x^2/b^2\ )\ Fb\ 1/EJ\ dx = [1/4\ x^2/b - 1/6\ x^3/b^2\ ]_o^b\ Fb\ 1/EJ$

$= (1/4\ b - 1/6\ b\ )\ Fb\ 1/EJ\ = 1/12\ Fb^2/EJ$

$L^{Xo}_{HI} = \int_o^b (-1/2 + x/b - 1/2\ x^2/b^2\ )\ Fb\ 1/EJ\ dx = [-1/2\ x + 1/2\ x^2/b - 1/6\ x^3/b^2\ ]_o^b\ Fb\ 1/EJ$

$= (-1/2\ b + 1/2\ b - 1/6\ b\ )\ Fb\ 1/EJ\ = -1/6\ Fb^2/EJ$

$L^{Xo}_{IH} = \int_o^b (-1/2\ x^2/b^2\ )\ Fb\ 1/EJ\ dx = [-1/6\ x^3/b^2\ ]_o^b\ Fb\ 1/EJ$

$= (-1/6\ b\ )\ Fb\ 1/EJ\ = -1/6\ Fb^2/EJ$

$L^{Xo}_{HG} = \int_o^b (1 - x/b\ )\ Fb\ 1/EJ\ dx - 1\ \ (-1)\ \ (-1)\ \ Fb^2/EJ = [\ x - 1/2\ x^2/b\ ]_o^b\ Fb\ 1/EJ\ \ - 1\ \ (-1)\ \ (-1)\ \ Fb^2/EJ$

$= (\ b - 1/2\ b\ )\ Fb\ 1/EJ\ \ - 1\ \ (-1)\ \ (-1)\ \ Fb^2/EJ = -1/2\ \ Fb^2/EJ$

$L^{Xo}_{GH} = \int_o^b (\ x/b\ )\ Fb\ 1/EJ\ dx - 1\ \ (-1)\ \ (-1)\ \ Fb^2/EJ = [1/2\ x^2/b\ ]_o^b\ Fb\ 1/EJ\ \ - 1\ \ (-1)\ \ (-1)\ \ Fb^2/EJ$

$= (1/2\ b\ )\ Fb\ 1/EJ\ \ - 1\ \ (-1)\ \ (-1)\ \ Fb^2/EJ = -1/2\ \ Fb^2/EJ$

PROCEDIMENTO E RISULTATI 955642 ESΣ05.xxxx.170

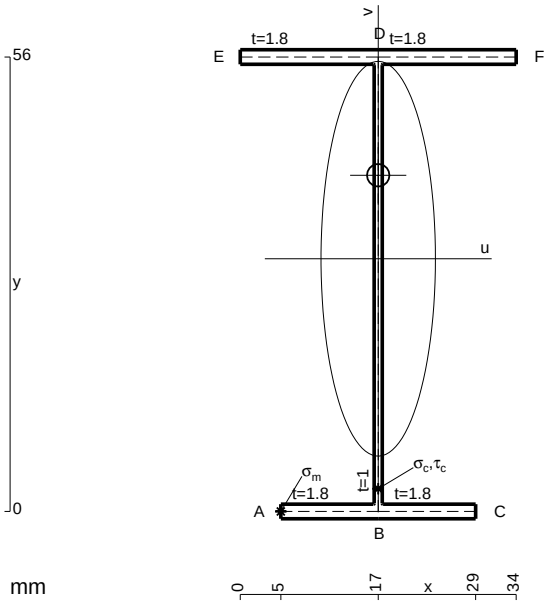

A = 160.4 mm^2
J_u = 94901. mm^4
J_v = 7969. mm^4
J_t = 131.4 mm^4
y_o = 10.29 mm
y_g = 31.14 mm
T_y = -2520. N
M_x = -604800. Nmm
x_m = 5. mm
u_m = -12. mm
v_m = -31.14 mm
$\sigma_m = -Mv/J_u$ = -198.5 N/mm^2
x_c = 17. mm
v_c = -31.14 mm
$\sigma_c = -Mv/J_u$ = -198.5 N/mm^2
$\tau_c = TS^*/tJ_u$ = 35.72 N/mm^2
$\tau_g = TS^*/tJ_u$ = 35.72 N/mm^2
t_c = 840. mm
$\sigma_o = \sqrt{\sigma^2 + 3\tau^2}$ = 207.9 N/mm^2

@ Adolfo Zavelani Rossi, Politecnico di Milano, vers.27.03.13 01.12.25

ESΣ05.xxxx.170

@ Adolfo Zavelani Rossi, Politecnico di Milano, vers.27.03.13 01.12.25

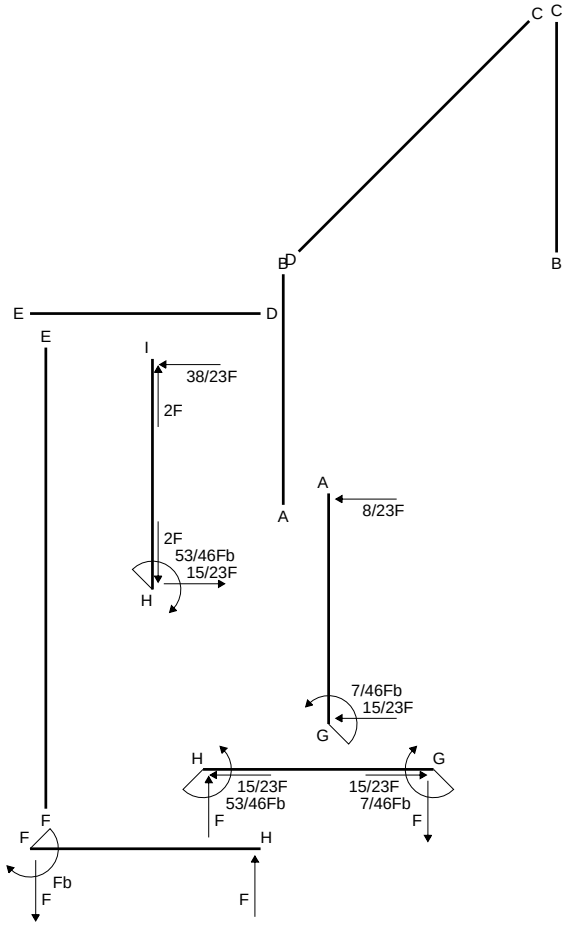
C C
B D
B
E D
E
I
38/23F
2F
A
A
8/23F
2F
53/46Fb
15/23F
H
7/46Fb
15/23F
G
H
G
15/23F
53/46Fb
15/23F
7/46Fb
F
F
H
F
Fb
F
F

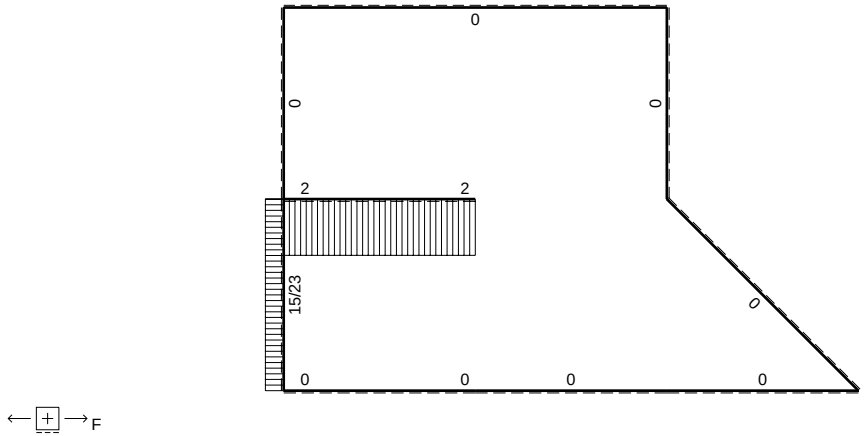
0
0
0
2
2
15/23
0
0
0
0
0
F

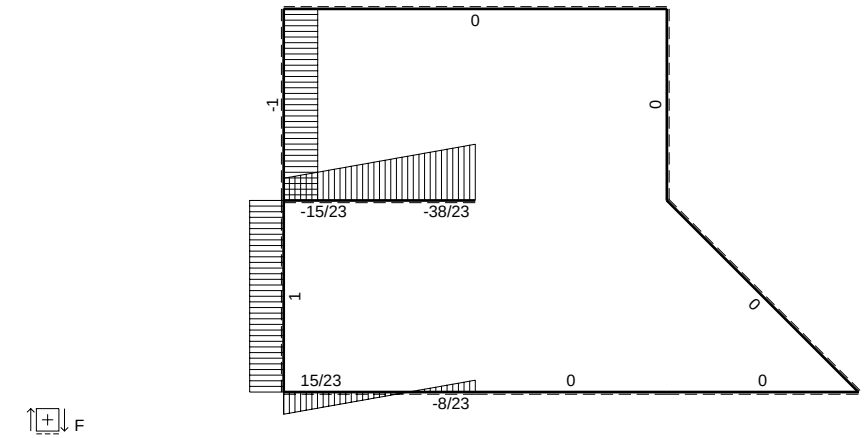
0
-1
0
-15/23
-38/23
1
0
15/23
0
0
-8/23
F

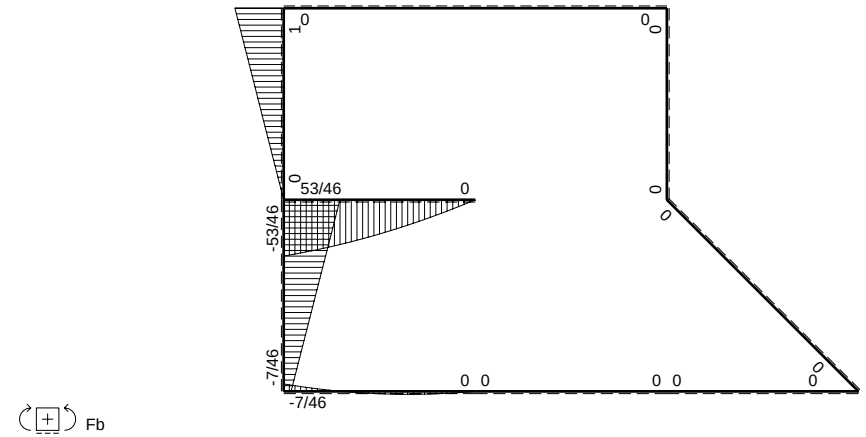
1
0
0
0
0
53/46
0
-53/46
0
0
0
-7/46
0 0
0 0
0
-7/46
Fb

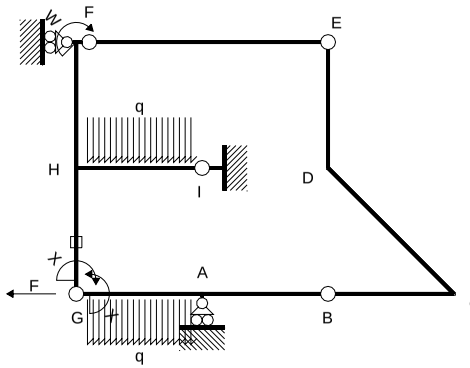

Schema di calcolo iperstatico

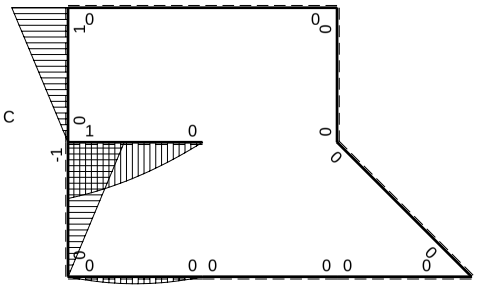

M_0 flessione da carichi assegnati

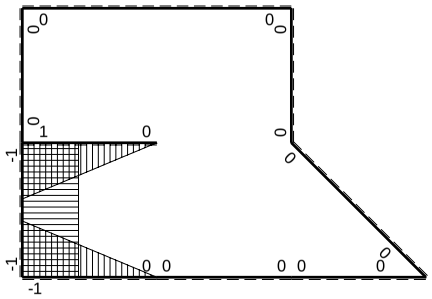

M_x flessione da iperstatica X=1

Quadro contributi PLV per iperstatica $X=W_{GA}$

→	$M_x(x)$	$M_0(x)$	M_xM_0	M_xM_x	$\int M_xM_0/EJdx$	$\int XM_xM_x/EJdx$
AB b	0	0	0	0	0	0
BA b	0	0	0	0		
BC b	0	0	0	0	0	0
CB b	0	0	0	0		
CD √2b	0	0	0	0	0	0
DE b	0	0	0	0	0	0
ED b	0	0	0	0		
EF 2b	0	0	0	0	0	0
FE 2b	0	0	0	0		
GA b	-1+x/b	$1/2Fx-1/2qx^2$	$-1/2Fx+Fx^2/b-1/2qx^3/b$	$1-2x/b+x^2/b^2$	$-1/24Fb^2/EJ$	$1/3Xb/EJ$
AG b	x/b	$-1/2Fx+1/2qx^2$	$-1/2Fx^2/b+1/2qx^3/b$	x^2/b^2		
FH b	0	Fb-Fx	0	0	0	0
HF b	0	-Fx	0	0		
HI b	1-x/b	$Fb-1/2Fx-1/2qx^2$	$Fb-3/2Fx+1/2qx^3/b$	$1-2x/b+x^2/b^2$	$3/8Fb^2/EJ$	$1/3Xb/EJ$
IH b	-x/b	$-3/2Fx+1/2qx^2$	$3/2Fx^2/b-1/2qx^3/b$	x^2/b^2		
HG b	-1	-Fb+Fx	Fb-Fx	1	$1/2Fb^2/EJ$	Xb/EJ
GH b	1	Fx	Fx	1		
HG	elongazione asta $N_{1HG}\varepsilon_{HG}L_{HG}$				$-Fb^2/EJ$	
A	molla nodo $-V_{1A}(V_{0A}+XV_{1A})/k_A$				$-1/8Fb^2/EJ$	$1/4Xb/EJ$
	totali				$-7/24Fb^2/EJ$	$23/12Xb/EJ$
	iperstatica $X=W_{GA}$				7/46Fb	

Sviluppi di calcolo iperstatica

$L^{XX}_{GA} = \int_o^b (1 - 2\,x/b + x^2/b^2)\ 1/EJ\ dx = [\ x - x^2/b + 1/3\ x^3/b^2\ ]_o^b\ 1/EJ$

$= (\ b - b + 1/3\ b\ )\ 1/EJ\ = 1/3\ b/EJ$

$L^{XX}_{AG} = \int_o^b (\ x^2/b^2\ )\ 1/EJ\ dx = [1/3\ x^3/b^2\ ]_o^b\ 1/EJ$

$= (1/3\ b\ )\ 1/EJ\ = 1/3\ b/EJ$

$L^{XX}_{HI} = \int_o^b (1 - 2\,x/b + x^2/b^2)\ 1/EJ\ dx = [\ x - x^2/b + 1/3\ x^3/b^2\ ]_o^b\ 1/EJ$

$= (\ b - b + 1/3\ b\ )\ 1/EJ\ = 1/3\ b/EJ$

$L^{XX}_{IH} = \int_o^b (\ x^2/b^2\ )\ 1/EJ\ dx = [1/3\ x^3/b^2\ ]_o^b\ 1/EJ$

$= (1/3\ b\ )\ 1/EJ\ = 1/3\ b/EJ$

$L^{XX}_{HG} = \int_o^b (1\ )\ 1/EJ\ dx = [\ x\ ]_o^b\ 1/EJ$

$= (\ b\ )\ 1/EJ\ =\ b/EJ$

$L^{XX}_{GH} = \int_o^b (1\ )\ 1/EJ\ dx = [\ x\ ]_o^b\ 1/EJ$

$= (\ b\ )\ 1/EJ\ =\ b/EJ$

$L^{Xo}_{GA} = \int_o^b (-1/2\ x/b + x^2/b^2 - 1/2\ x^3/b^3\ )\ Fb\ 1/EJ\ dx = [-1/4\ x^2/b + 1/3\ x^3/b^2 - 1/8\ x^4/b^3\ ]_o^b\ Fb\ 1/EJ$

$= (-1/4\ b + 1/3\ b - 1/8\ b\ )\ Fb\ 1/EJ\ = -1/24\ Fb^2/EJ$

$L^{Xo}_{AG} = \int_o^b (-1/2\ x^2/b^2 + 1/2\ x^3/b^3\ )\ Fb\ 1/EJ\ dx = [-1/6\ x^3/b^2 + 1/8\ x^4/b^3\ ]_o^b\ Fb\ 1/EJ$

$= (-1/6\ b + 1/8\ b\ )\ Fb\ 1/EJ\ = -1/24\ Fb^2/EJ$

$L^{Xo}_{HI} = \int_o^b (1 - 3/2\ x/b + 1/2\ x^3/b^3\ )\ Fb\ 1/EJ\ dx = [\ x - 3/4\ x^2/b + 1/8\ x^4/b^3\ ]_o^b\ Fb\ 1/EJ$

$= (\ b - 3/4\ b + 1/8\ b\ )\ Fb\ 1/EJ\ = 3/8\ Fb^2/EJ$

$L^{Xo}_{IH} = \int_o^b (3/2\ x^2/b^2 - 1/2\ x^3/b^3\ )\ Fb\ 1/EJ\ dx = [1/2\ x^3/b^2 - 1/8\ x^4/b^3\ ]_o^b\ Fb\ 1/EJ$

$= (1/2\ b - 1/8\ b\ )\ Fb\ 1/EJ\ = 3/8\ Fb^2/EJ$

$L^{Xo}_{HG} = \int_o^b (1 - x/b\ )\ Fb\ 1/EJ\ dx - 1\ \ (-1)\ \ (-1)\ \ Fb^2/EJ = [\ x - 1/2\ x^2/b\ ]_o^b\ Fb\ 1/EJ\ - 1\ \ (-1)\ \ (-1)\ \ Fb^2/EJ$

$= (\ b - 1/2\ b\ )\ Fb\ 1/EJ\ - 1\ \ (-1)\ \ (-1)\ \ Fb^2/EJ = -1/2\ \ Fb^2/EJ$

$L^{Xo}_{GH} = \int_o^b (\ x/b\ )\ Fb\ 1/EJ\ dx - 1\ \ (-1)\ \ (-1)\ \ Fb^2/EJ = [1/2\ x^2/b\ ]_o^b\ Fb\ 1/EJ\ - 1\ \ (-1)\ \ (-1)\ \ Fb^2/EJ$

$= (1/2\ b\ )\ Fb\ 1/EJ\ - 1\ \ (-1)\ \ (-1)\ \ Fb^2/EJ = -1/2\ \ Fb^2/EJ$

PROCEDIMENTO E RISULTATI 238383 ESΣ05.xxxx.171

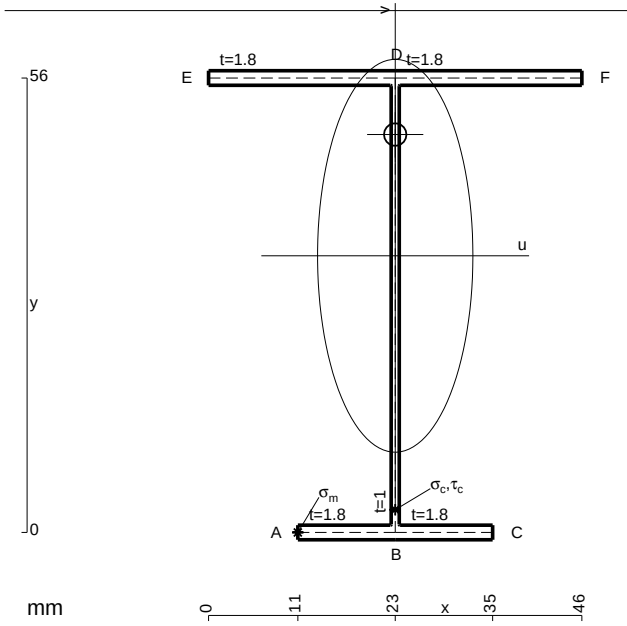

A = 182. mm^2
J_u = 106664. mm^4
J_v = 16674. mm^4
J_t = 154.7 mm^4
y_o = 14.94 mm
y_g = 34.09 mm
T_y = -1260. N
M_x = 655200. Nmm
x_m = 11. mm
u_m = -12. mm
v_m = -34.09 mm
$\sigma_m = -Mv/J_u$ = 209.4 N/mm^2
x_c = 23. mm
v_c = -34.09 mm
$\sigma_c = -Mv/J_u$ = 209.4 N/mm^2
$\tau_c = TS^*/tJ_u$ = 17.4 N/mm^2
$\tau_g = TS^*/tJ_u$ = 17.4 N/mm^2
t_c = 1260. mm
$\sigma_o = \sqrt{\sigma^2 + 3\tau^2}$ = 211.6 N/mm^2

@ Adolfo Zavelani Rossi, Politecnico di Milano, vers.27.03.13 01.12.25

ESΣ05.xxxx.171

@ Adolfo Zavelani Rossi, Politecnico di Milano, vers.27.03.13 01.12.25

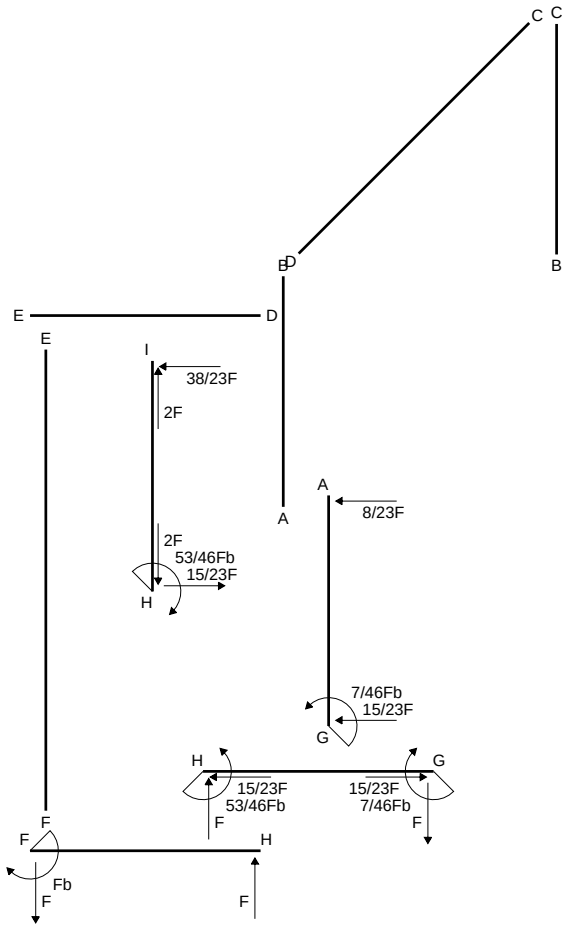
C C
B D
B
E D
E
I
38/23F
2F
A
A
8/23F
2F
53/46Fb
15/23F
H
7/46Fb
15/23F
G
H
G
15/23F
53/46Fb
15/23F
7/46Fb
F
F
H
F
F
Fb
F
F

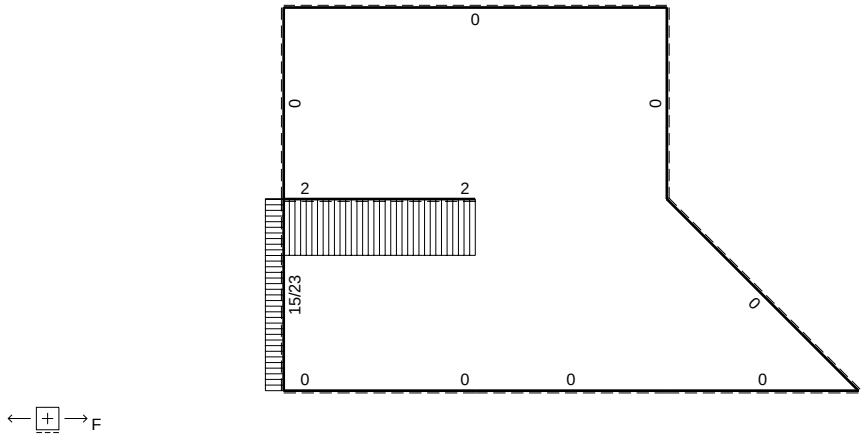
0
0
0
2
2
15/23
0
0
0
0
0
F

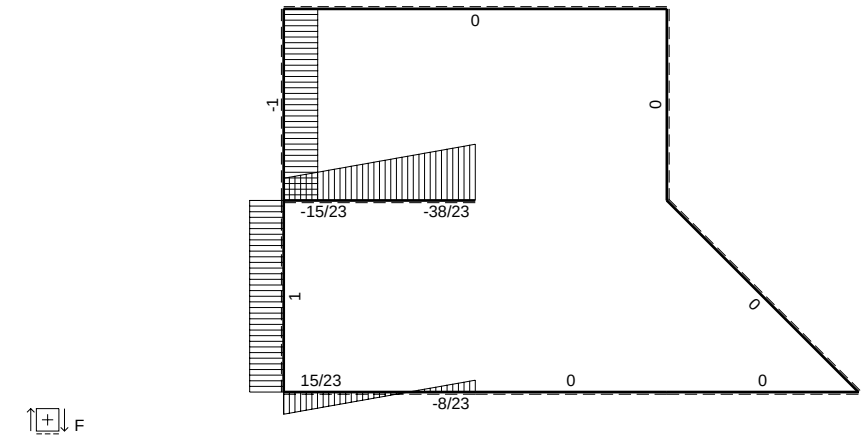
0
-1
0
-15/23
-38/23
1
0
15/23
0
0
-8/23
F

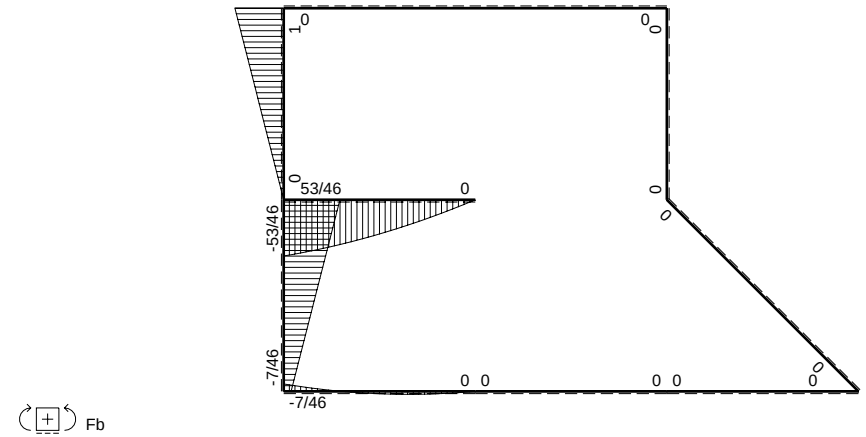
1
0
0
0
53/46
0
-53/46
0
0
0
0 0
0 0
0
-7/46
-7/46
Fb

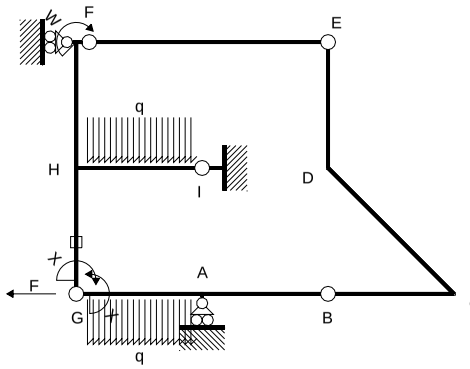

Schema di calcolo iperstatico

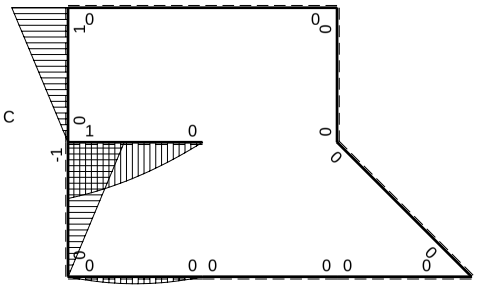

M_0 flessione da carichi assegnati

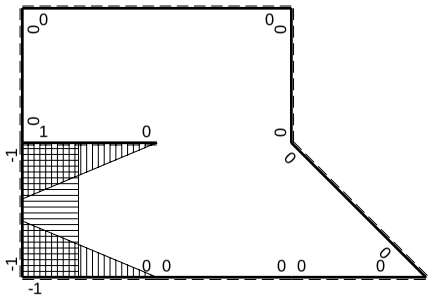

M_x flessione da iperstatica X=1

Quadro contributi PLV per iperstatica $X=W_{GA}$

→	$M_x(x)$	$M_0(x)$	M_xM_0	M_xM_x	$\int M_xM_0/EJdx$	$\int XM_xM_x/EJdx$
AB b	0	0	0	0	0	0
BA b	0	0	0	0		
BC b	0	0	0	0	0	0
CB b	0	0	0	0		
CD √2b	0	0	0	0	0	0
DE b	0	0	0	0	0	0
ED b	0	0	0	0		
EF 2b	0	0	0	0	0	0
FE 2b	0	0	0	0		
GA b	-1+x/b	$1/2Fx-1/2qx^2$	$-1/2Fx+Fx^2/b-1/2qx^3/b$	$1-2x/b+x^2/b^2$	$-1/24Fb^2/EJ$	$1/3Xb/EJ$
AG b	x/b	$-1/2Fx+1/2qx^2$	$-1/2Fx^2/b+1/2qx^3/b$	x^2/b^2		
FH b	0	Fb-Fx	0	0	0	0
HF b	0	-Fx	0	0		
HI b	1-x/b	$Fb-1/2Fx-1/2qx^2$	$Fb-3/2Fx+1/2qx^3/b$	$1-2x/b+x^2/b^2$	$3/8Fb^2/EJ$	$1/3Xb/EJ$
IH b	-x/b	$-3/2Fx+1/2qx^2$	$3/2Fx^2/b-1/2qx^3/b$	x^2/b^2		
HG b	-1	-Fb+Fx	Fb-Fx	1	$1/2Fb^2/EJ$	Xb/EJ
GH b	1	Fx	Fx	1		
HG	elongazione asta $N_{1HG}\varepsilon_{HG}L_{HG}$				$-Fb^2/EJ$	
A	molla nodo $-V_{1A}(V_{0A}+XV_{1A})/k_A$				$-1/8Fb^2/EJ$	$1/4Xb/EJ$
	totali				$-7/24Fb^2/EJ$	$23/12Xb/EJ$
	iperstatica $X=W_{GA}$				7/46Fb	

Sviluppi di calcolo iperstatica

$L^{XX}_{GA} = \int_o^b (1 - 2\,x/b + x^2/b^2)\ 1/EJ\ dx = [\,x - x^2/b + 1/3\,x^3/b^2\,]_o^b\ 1/EJ$

$= (\,b - b + 1/3\,b\,)\ 1/EJ = 1/3\ b/EJ$

$L^{XX}_{AG} = \int_o^b (\,x^2/b^2\,)\ 1/EJ\ dx = [1/3\,x^3/b^2\,]_o^b\ 1/EJ$

$= (1/3\,b\,)\ 1/EJ = 1/3\ b/EJ$

$L^{XX}_{HI} = \int_o^b (1 - 2\,x/b + x^2/b^2)\ 1/EJ\ dx = [\,x - x^2/b + 1/3\,x^3/b^2\,]_o^b\ 1/EJ$

$= (\,b - b + 1/3\,b\,)\ 1/EJ = 1/3\ b/EJ$

$L^{XX}_{IH} = \int_o^b (\,x^2/b^2\,)\ 1/EJ\ dx = [1/3\,x^3/b^2\,]_o^b\ 1/EJ$

$= (1/3\,b\,)\ 1/EJ = 1/3\ b/EJ$

$L^{XX}_{HG} = \int_o^b (1)\ 1/EJ\ dx = [\,x\,]_o^b\ 1/EJ$

$= (\,b\,)\ 1/EJ = b/EJ$

$L^{XX}_{GH} = \int_o^b (1)\ 1/EJ\ dx = [\,x\,]_o^b\ 1/EJ$

$= (\,b\,)\ 1/EJ = b/EJ$

$L^{Xo}_{GA} = \int_o^b (-1/2\,x/b + x^2/b^2 - 1/2\,x^3/b^3)\ Fb\ 1/EJ\ dx = [-1/4\,x^2/b + 1/3\,x^3/b^2 - 1/8\,x^4/b^3\,]_o^b\ Fb\ 1/EJ$

$= (-1/4\,b + 1/3\,b - 1/8\,b)\ Fb\ 1/EJ = -1/24\ Fb^2/EJ$

$L^{Xo}_{AG} = \int_o^b (-1/2\,x^2/b^2 + 1/2\,x^3/b^3)\ Fb\ 1/EJ\ dx = [-1/6\,x^3/b^2 + 1/8\,x^4/b^3\,]_o^b\ Fb\ 1/EJ$

$= (-1/6\,b + 1/8\,b)\ Fb\ 1/EJ = -1/24\ Fb^2/EJ$

$L^{Xo}_{HI} = \int_o^b (1 - 3/2\,x/b + 1/2\,x^3/b^3)\ Fb\ 1/EJ\ dx = [\,x - 3/4\,x^2/b + 1/8\,x^4/b^3\,]_o^b\ Fb\ 1/EJ$

$= (\,b - 3/4\,b + 1/8\,b\,)\ Fb\ 1/EJ = 3/8\ Fb^2/EJ$

$L^{Xo}_{IH} = \int_o^b (3/2\,x^2/b^2 - 1/2\,x^3/b^3)\ Fb\ 1/EJ\ dx = [1/2\,x^3/b^2 - 1/8\,x^4/b^3\,]_o^b\ Fb\ 1/EJ$

$= (1/2\,b - 1/8\,b)\ Fb\ 1/EJ = 3/8\ Fb^2/EJ$

$L^{Xo}_{HG} = \int_o^b (1 - x/b)\ Fb\ 1/EJ\ dx - 1\ \ (-1)\ \ (-1)\ \ Fb^2/EJ = [\,x - 1/2\,x^2/b\,]_o^b\ Fb\ 1/EJ\ \ - 1\ \ (-1)\ \ (-1)\ \ Fb^2/EJ$

$= (\,b - 1/2\,b\,)\ Fb\ 1/EJ\ \ - 1\ \ (-1)\ \ (-1)\ \ Fb^2/EJ = -1/2\ \ Fb^2/EJ$

$L^{Xo}_{GH} = \int_o^b (\,x/b\,)\ Fb\ 1/EJ\ dx - 1\ \ (-1)\ \ (-1)\ \ Fb^2/EJ = [1/2\,x^2/b\,]_o^b\ Fb\ 1/EJ\ \ - 1\ \ (-1)\ \ (-1)\ \ Fb^2/EJ$

$= (1/2\,b\,)\ Fb\ 1/EJ\ \ - 1\ \ (-1)\ \ (-1)\ \ Fb^2/EJ = -1/2\ \ Fb^2/EJ$

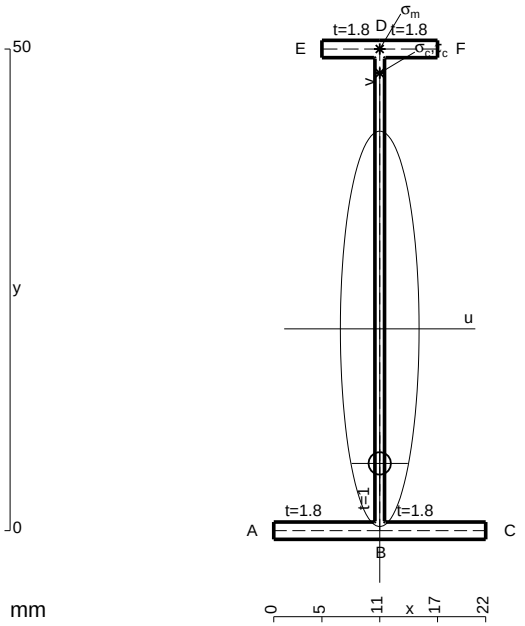

A = 111.2 mm^2
J_u = 46846. mm^4
J_v = 1856. mm^4
J_t = 82.76 mm^4
y_o = -13.97 mm
y_g = 20.95 mm
T_y = -690. N
M_x = 351900. Nmm
x_m = 11. mm
y_m = 50. mm
v_m = 29.05 mm
$\sigma_m = -Mv/J_u$ = -218.2 N/mm^2
y_c = 2. mm
u_c = -11. mm
v_c = -18.95 mm
$\sigma_c = -Mv/J_u$ = -218.2 N/mm^2
$\tau_c = TS^*/tJ_u$ = 9.241 N/mm^2
$\tau_g = TS^*/tJ_u$ = 9.241 N/mm^2
t_c = 690. mm
$\sigma_o = \sqrt{\sigma^2 + 3\tau^2}$ = 218.8 N/mm^2

ESΣ05.xxxx.172

@ Adolfo Zavelani Rossi, Politecnico di Milano, vers.27.03.13 01.12.25

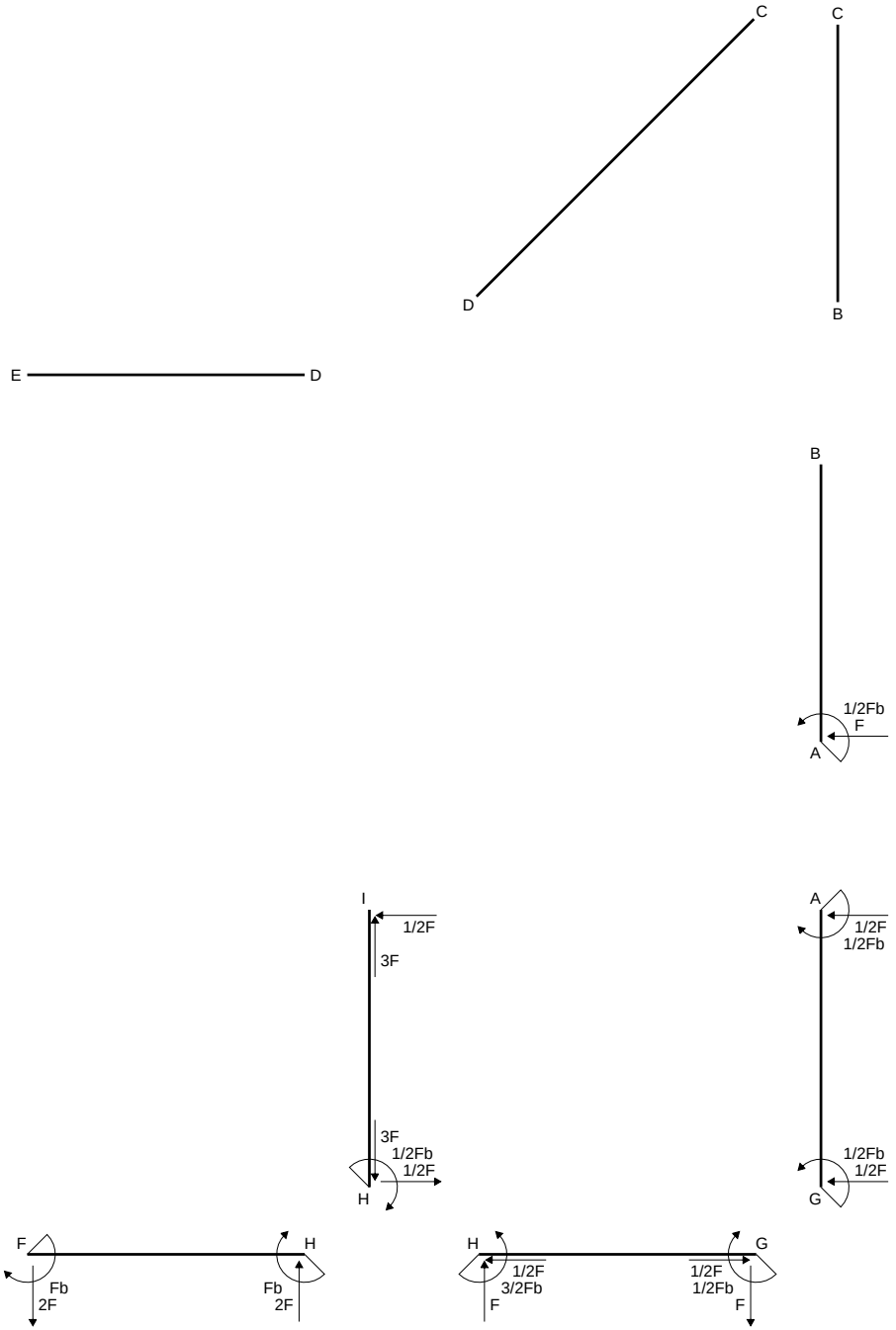
C
C
D
B
E
D
B
E
1/2Fb
F
A
F
I
1/2F
3F
A
1/2F
1/2Fb
3F
1/2Fb
1/2F
H
1/2Fb
1/2F
G
F
H
Fb
2F
Fb
2F
H
G
1/2F
3/2Fb
F
1/2F
1/2Fb
F

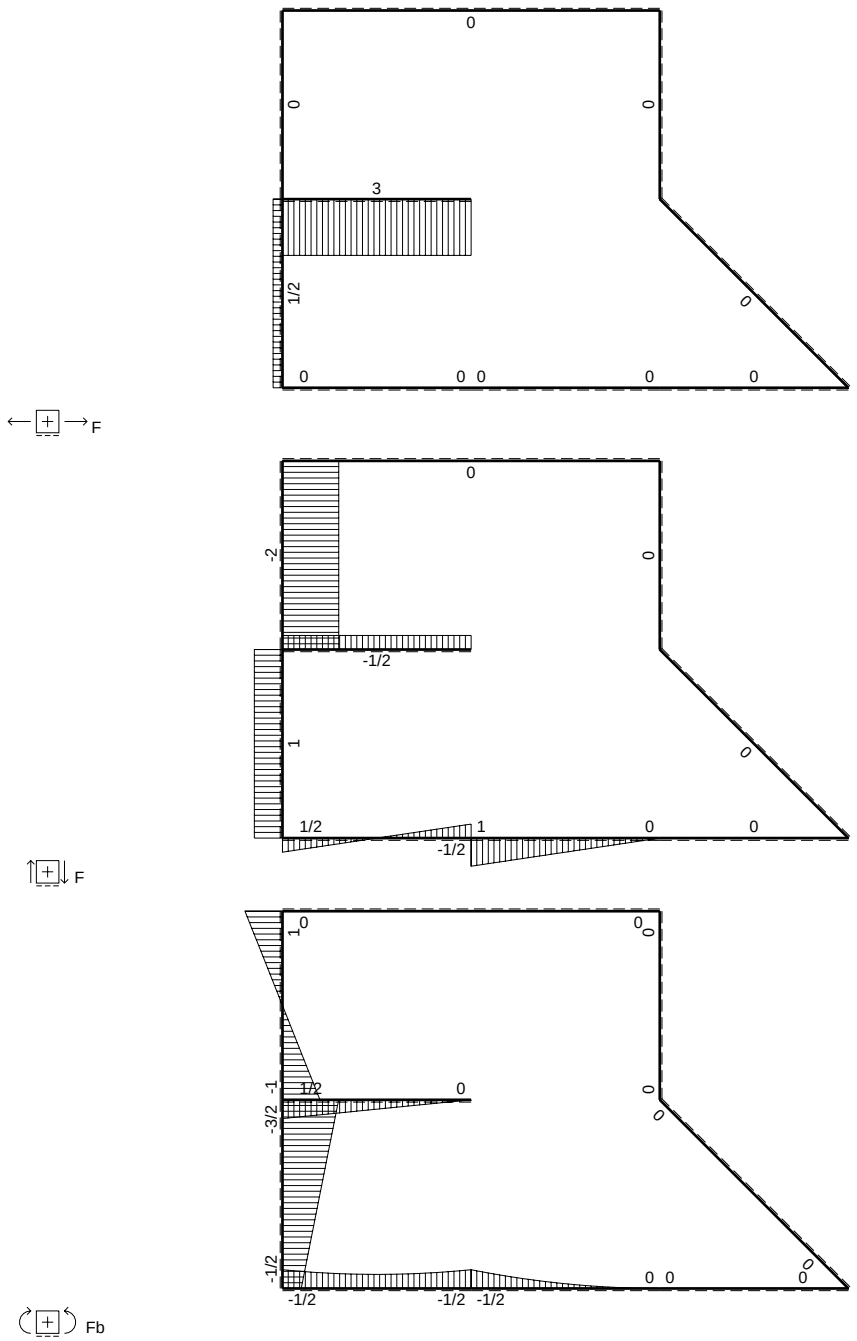
0
0
0
3
1/2
0
0 0
0
0
F
0
-2
0
-1/2
1
0
1/2
1
0
0
-1/2
F
1
0
0
0
-1
-3/2
1/2
0
0
0
-1/2
0 0
0
-1/2
-1/2 -1/2
Fb

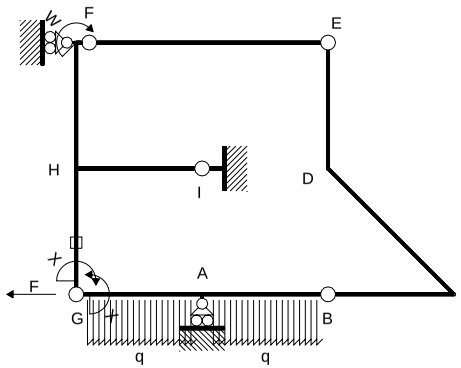

Schema di calcolo iperstatico

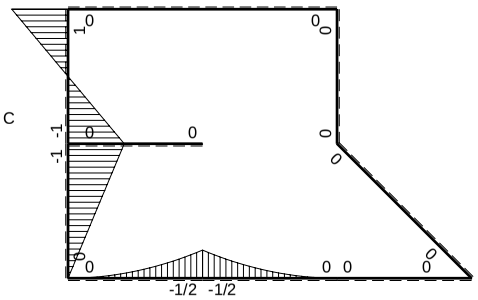

M_0 flessione da carichi assegnati

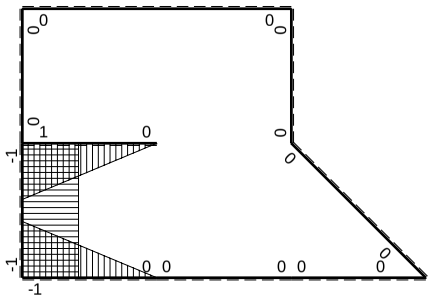

M_x flessione da iperstatica X=1

PROCEDIMENTO E RISULTATI 238219 ESΣ05.xxxx.173

Quadro contributi PLV per iperstatica $X=W_{GA}$

→	$M_x(x)$	$M_o(x)$	M_xM_o	M_xM_x	$\int M_xM_o/EJdx$	$\int XM_xM_x/EJdx$
AB b	0	$-1/2Fb+Fx-1/2qx^2$	0	0	0	0
BA b	0	$1/2qx^2$	0	0		
BC b	0	0	0	0	0	0
CB b	0	0	0	0		
CD $\sqrt{2}b$	0	0	0	0	0	0
DE b	0	0	0	0	0	0
ED b	0	0	0	0		
EF 2b	0	0	0	0	0	0
FE 2b	0	0	0	0		
GA b	$-1+x/b$	$-1/2qx^2$	$1/2Fx^2/b-1/2qx^3/b$	$1-2x/b+x^2/b^2$	$1/24Fb^2/EJ$	$1/3Xb/EJ$
AG b	x/b	$1/2Fb-Fx+1/2qx^2$	$1/2Fx-Fx^2/b+1/2qx^3/b$	x^2/b^2		
FH b	0	$Fb-2Fx$	0	0	0	0
HF b	0	$Fb-2Fx$	0	0		
HI b	$1-x/b$	0	0	$1-2x/b+x^2/b^2$	0	$1/3Xb/EJ$
IH b	$-x/b$	0	0	x^2/b^2		
HG b	-1	$-Fb+Fx$	$Fb-Fx$	1	$1/2Fb^2/EJ$	Xb/EJ
GH b	1	Fx	Fx	1		
HG	elongazione asta $N_{1HG}\varepsilon_{HG}L_{HG}$				$-Fb^2/EJ$	
A	molla nodo $-V_{1A}(V_{0A}+XV_{1A})/k_A$				$-1/2Fb^2/EJ$	$1/4Xb/EJ$
	totali				$-23/24Fb^2/EJ$	$23/12Xb/EJ$
	iperstatica $X=W_{GA}$				$1/2Fb$	

Sviluppi di calcolo iperstatica

@ Adolfo Zavelani Rossi, Politecnico di Milano, vers.27.03.13 01.12.25

$L^{XX}_{GA} = \int_o^b (1 - 2\,x/b + x^2/b^2)\ 1/EJ\ dx = [\ x - x^2/b + 1/3\ x^3/b^2\ ]_o^b\ 1/EJ$

$= (\ b - b + 1/3\ b\ )\ 1/EJ\ = 1/3\ b/EJ$

$L^{XX}_{AG} = \int_o^b (\ x^2/b^2\ )\ 1/EJ\ dx = [1/3\ x^3/b^2\ ]_o^b\ 1/EJ$

$= (1/3\ b\ )\ 1/EJ\ = 1/3\ b/EJ$

$L^{XX}_{HI} = \int_o^b (1 - 2\,x/b + x^2/b^2)\ 1/EJ\ dx = [\ x - x^2/b + 1/3\ x^3/b^2\ ]_o^b\ 1/EJ$

$= (\ b - b + 1/3\ b\ )\ 1/EJ\ = 1/3\ b/EJ$

$L^{XX}_{IH} = \int_o^b (\ x^2/b^2\ )\ 1/EJ\ dx = [1/3\ x^3/b^2\ ]_o^b\ 1/EJ$

$= (1/3\ b\ )\ 1/EJ\ = 1/3\ b/EJ$

$L^{XX}_{HG} = \int_o^b (1)\ 1/EJ\ dx = [\ x\ ]_o^b\ 1/EJ$

$= (\ b\ )\ 1/EJ\ =\ b/EJ$

$L^{XX}_{GH} = \int_o^b (1)\ 1/EJ\ dx = [\ x\ ]_o^b\ 1/EJ$

$= (\ b\ )\ 1/EJ\ =\ b/EJ$

$L^{Xo}_{GA} = \int_o^b (1/2\ x^2/b^2 - 1/2\ x^3/b^3)\ Fb\ 1/EJ\ dx = [1/6\ x^3/b^2 - 1/8\ x^4/b^3\ ]_o^b\ Fb\ 1/EJ$

$= (1/6\ b - 1/8\ b\ )\ Fb\ 1/EJ\ = 1/24\ \ Fb^2/EJ$

$L^{Xo}_{AG} = \int_o^b (1/2\ x/b - x^2/b^2 + 1/2\ x^3/b^3)\ Fb\ 1/EJ\ dx = [1/4\ x^2/b - 1/3\ x^3/b^2 + 1/8\ x^4/b^3\ ]_o^b\ Fb\ 1/EJ$

$= (1/4\ b - 1/3\ b + 1/8\ b\ )\ Fb\ 1/EJ\ = 1/24\ \ Fb^2/EJ$

$L^{Xo}_{HG} = \int_o^b (1 - x/b\ )\ Fb\ 1/EJ\ dx - 1\ \ (-1)\ \ (-1)\ \ Fb^2/EJ = [\ x - 1/2\ x^2/b\ ]_o^b\ Fb\ 1/EJ\ - 1\ \ (-1)\ \ (-1)\ \ Fb^2/EJ$

$= (\ b - 1/2\ b\ )\ Fb\ 1/EJ\ - 1\ \ (-1)\ \ (-1)\ \ Fb^2/EJ = -1/2\ \ Fb^2/EJ$

$L^{Xo}_{GH} = \int_o^b (\ x/b\ )\ Fb\ 1/EJ\ dx - 1\ \ (-1)\ \ (-1)\ \ Fb^2/EJ = [1/2\ x^2/b\ ]_o^b\ Fb\ 1/EJ\ - 1\ \ (-1)\ \ (-1)\ \ Fb^2/EJ$

$= (1/2\ b\ )\ Fb\ 1/EJ\ - 1\ \ (-1)\ \ (-1)\ \ Fb^2/EJ = -1/2\ \ Fb^2/EJ$

PROCEDIMENTO E RISULTATI 238219 ESΣ05.xxxx.173

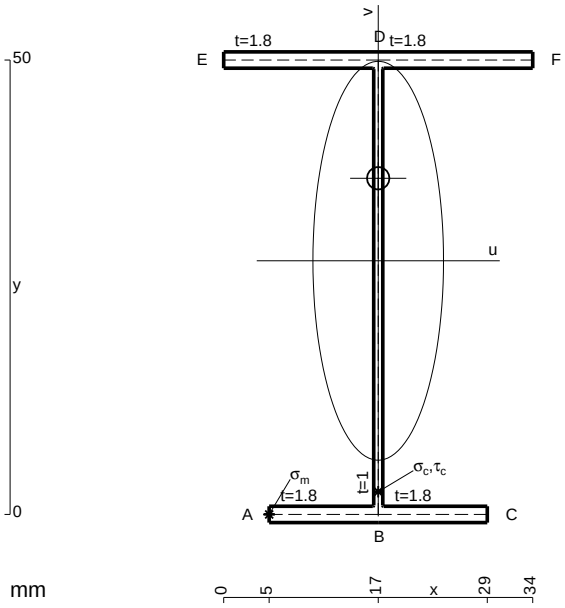

A = 154.4 mm^2
J_u = 74355. mm^4
J_v = 7969. mm^4
J_t = 129.4 mm^4
y_o = 9.075 mm
y_g = 27.91 mm
T_y = -2220. N
M_x = 610500. Nmm
x_m = 5. mm
u_m = -12. mm
v_m = -27.91 mm
$\sigma_m = -Mv/J_u$ = 229.2 N/mm^2
x_c = 17. mm
v_c = -27.91 mm
$\sigma_c = -Mv/J_u$ = 229.2 N/mm^2
$\tau_c = TS^*/tJ_u$ = 36. N/mm^2
$\tau_g = TS^*/tJ_u$ = 36. N/mm^2
t_c = 1110. mm
$\sigma_o = \sqrt{\sigma^2 + 3\tau^2}$ = 237.5 N/mm^2

@ Adolfo Zavelani Rossi, Politecnico di Milano, vers.27.03.13 01.12.25

ESΣ05.xxxx.173

@ Adolfo Zavelani Rossi, Politecnico di Milano, vers.27.03.13 01.12.25

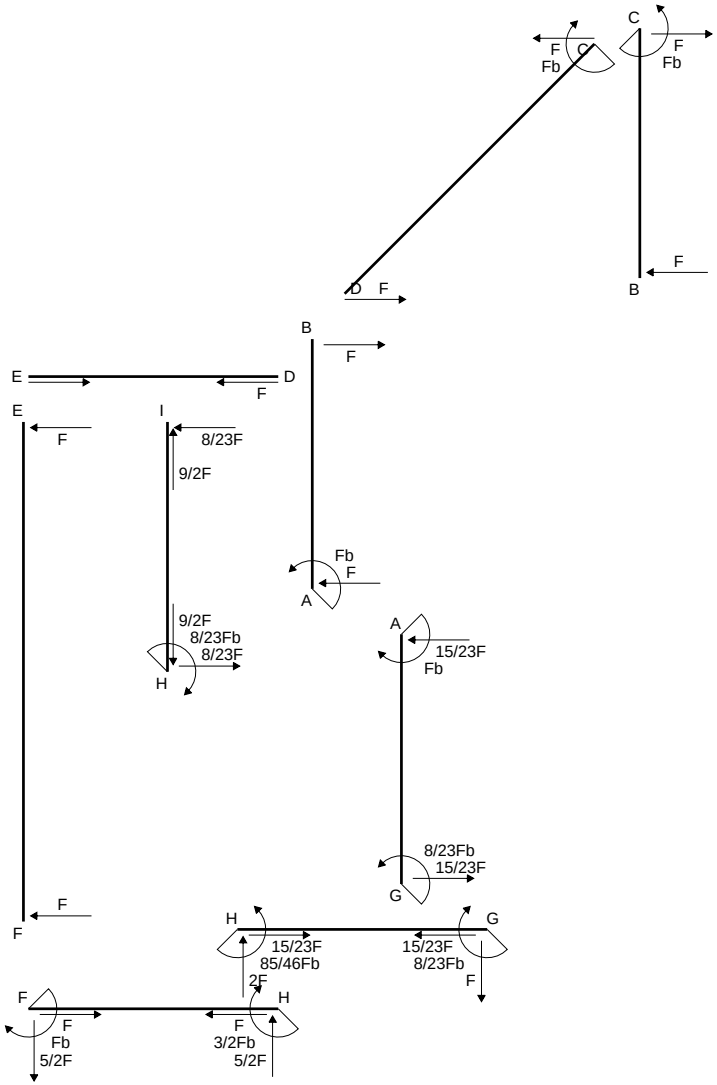
C
F
Fb
C
F
Fb
D
F
B
F
B
F
E
D
F
E
F
I
8/23F
9/2F
Fb
F
A
9/2F
8/23Fb
8/23F
H
A
15/23F
Fb
8/23Fb
15/23F
G
F
F
H
G
15/23F
85/46Fb
2F
15/23F
8/23Fb
F
F
H
F
Fb
5/2F
F
3/2Fb
5/2F

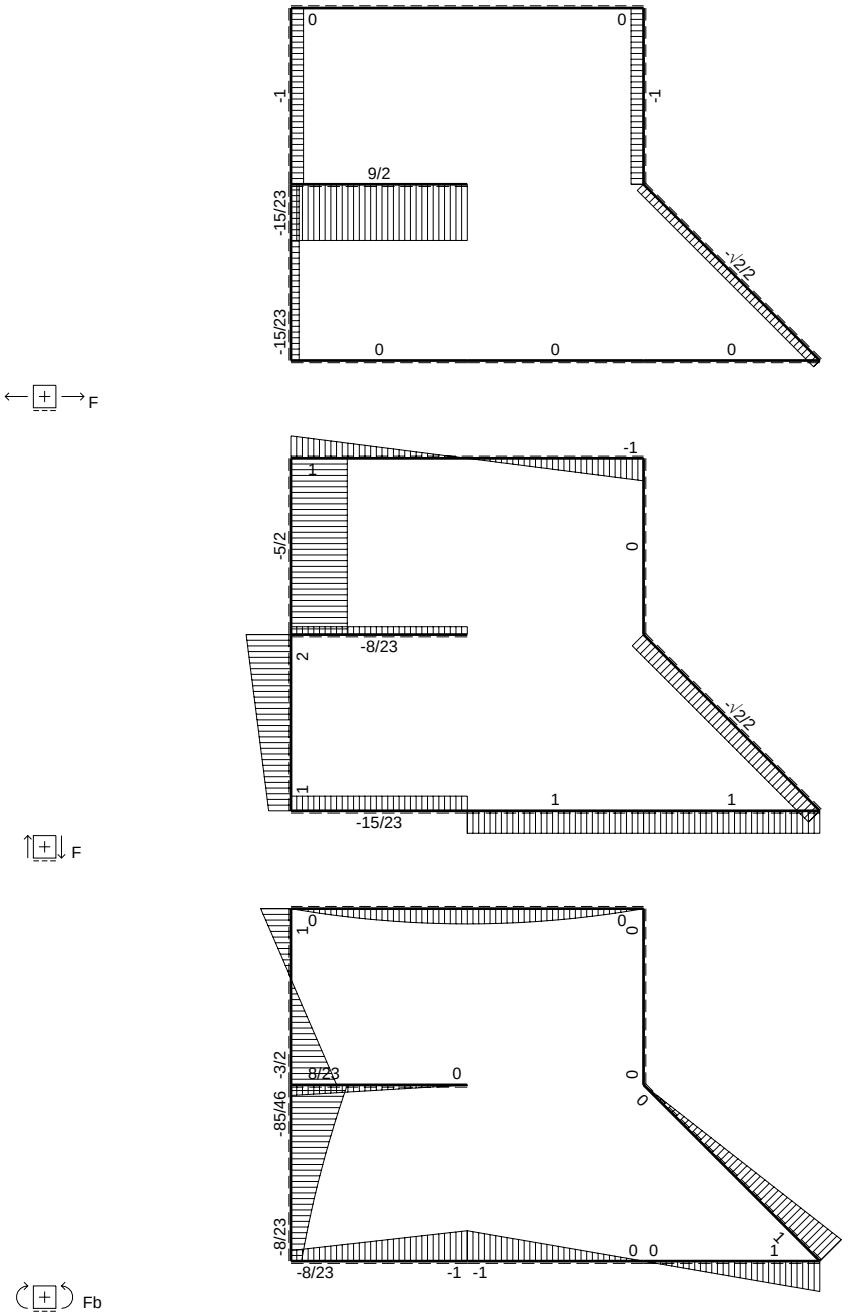
F
0
0
-1
-1
9/2
-15/23
-√2/2
-15/23
0
0
0
F
-1
1
-5/2
0
-8/23
2
-√2/2
1
1
1
-15/23
F
1
0
0
-3/2
8/23
0
-85/46
0
0
-8/23
0 0
1
-8/23
-1 -1
Fb

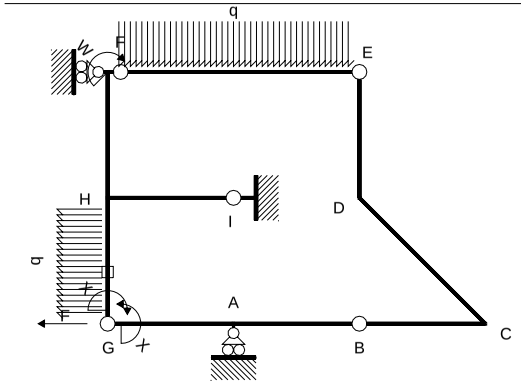

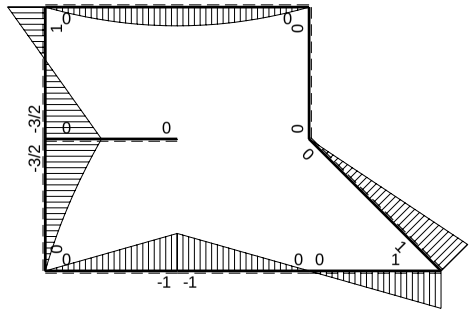

Schema di calcolo iperstatico

M_0 flessione da carichi assegnati

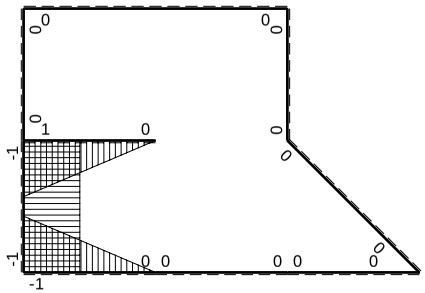

M_x flessione da iperstatica X=1

Quadro contributi PLV per iperstatica $X=W_{GA}$

→	$M_x(x)$	$M_0(x)$	M_xM_0	M_xM_x	$\int M_xM_0/EJdx$	$\int XM_xM_x/EJdx$
AB b	0	-Fb+Fx	0	0	0	0
BA b	0	Fx	0	0		
BC b	0	Fx	0	0	0	0
CB b	0	-Fb+Fx	0	0		
CD √2b	0	Fb-√2/2Fx	0	0	0	0
DE b	0	0	0	0	0	0
ED b	0	0	0	0		
EF 2b	0	$-Fx+1/2qx^2$	0	0	0	0
FE 2b	0	$Fx-1/2qx^2$	0	0		
GA b	-1+x/b	-Fx	$Fx-Fx^2/b$	$1-2x/b+x^2/b^2$	$1/6Fb^2/EJ$	1/3Xb/EJ
AG b	x/b	Fb-Fx	$Fx-Fx^2/b$	x^2/b^2		
FH b	0	Fb-5/2Fx	0	0	0	0
HF b	0	3/2Fb-5/2Fx	0	0		
HI b	1-x/b	0	0	$1-2x/b+x^2/b^2$	0	1/3Xb/EJ
IH b	-x/b	0	0	x^2/b^2		
HG b	-1	$-3/2Fb+2Fx-1/2qx^2$	$3/2Fb-2Fx+1/2Fx^2/b$	1	$2/3Fb^2/EJ$	Xb/EJ
GH b	1	$Fx+1/2qx^2$	$Fx+1/2Fx^2/b$	1		
HG	elongazione asta $N_{1HG}\varepsilon_{HG}L_{HG}$				$-Fb^2/EJ$	
A	molla nodo $-V_{1A}(V_{0A}+XV_{1A})/k_A$				$-1/2Fb^2/EJ$	1/4Xb/EJ
	totali				$-2/3Fb^2/EJ$	23/12Xb/EJ
	iperstatica $X=W_{GA}$				8/23Fb	

Sviluppi di calcolo iperstatica

$L^{XX}_{GA} = \int_o^b (1 - 2\,x/b + x^2/b^2)\ 1/EJ\ dx = [\ x - x^2/b + 1/3\ x^3/b^2\ ]_o^b\ 1/EJ$

$= (\ b - b + 1/3\ b\ )\ 1/EJ\ = 1/3\ b/EJ$

$L^{XX}_{AG} = \int_o^b (\ x^2/b^2\ )\ 1/EJ\ dx = [1/3\ x^3/b^2\ ]_o^b\ 1/EJ$

$= (1/3\ b\ )\ 1/EJ\ = 1/3\ b/EJ$

$L^{XX}_{HI} = \int_o^b (1 - 2\,x/b + x^2/b^2)\ 1/EJ\ dx = [\ x - x^2/b + 1/3\ x^3/b^2\ ]_o^b\ 1/EJ$

$= (\ b - b + 1/3\ b\ )\ 1/EJ\ = 1/3\ b/EJ$

$L^{XX}_{IH} = \int_o^b (\ x^2/b^2\ )\ 1/EJ\ dx = [1/3\ x^3/b^2\ ]_o^b\ 1/EJ$

$= (1/3\ b\ )\ 1/EJ\ = 1/3\ b/EJ$

$L^{XX}_{HG} = \int_o^b (1)\ 1/EJ\ dx = [\ x\ ]_o^b\ 1/EJ$

$= (\ b\ )\ 1/EJ\ =\ b/EJ$

$L^{XX}_{GH} = \int_o^b (1)\ 1/EJ\ dx = [\ x\ ]_o^b\ 1/EJ$

$= (\ b\ )\ 1/EJ\ =\ b/EJ$

$L^{Xo}_{GA} = \int_o^b (\ x/b - x^2/b^2\ )\ Fb\ 1/EJ\ dx = [1/2\ x^2/b - 1/3\ x^3/b^2\ ]_o^b\ Fb\ 1/EJ$

$= (1/2\ b - 1/3\ b\ )\ Fb\ 1/EJ\ = 1/6\ Fb^2/EJ$

$L^{Xo}_{AG} = \int_o^b (\ x/b - x^2/b^2\ )\ Fb\ 1/EJ\ dx = [1/2\ x^2/b - 1/3\ x^3/b^2\ ]_o^b\ Fb\ 1/EJ$

$= (1/2\ b - 1/3\ b\ )\ Fb\ 1/EJ\ = 1/6\ Fb^2/EJ$

$L^{Xo}_{HG} = \int_o^b (3/2 - 2\,x/b + 1/2\ x^2/b^2\ )\ Fb\ 1/EJ\ dx - 1\ \ (-1)\ \ (-1)\ \ Fb^2/EJ$

$= [3/2\ x - x^2/b + 1/6\ x^3/b^2\ ]_o^b\ Fb\ 1/EJ\ - 1\ \ (-1)\ \ (-1)\ \ Fb^2/EJ$

$= (3/2\ b - b + 1/6\ b\ )\ Fb\ 1/EJ\ - 1\ \ (-1)\ \ (-1)\ \ Fb^2/EJ = -1/3\ \ Fb^2/EJ$

$L^{Xo}_{GH} = \int_o^b (\ x/b + 1/2\ x^2/b^2\ )\ Fb\ 1/EJ\ dx - 1\ \ (-1)\ \ (-1)\ \ Fb^2/EJ$

$= [1/2\ x^2/b + 1/6\ x^3/b^2\ ]_o^b\ Fb\ 1/EJ\ - 1\ \ (-1)\ \ (-1)\ \ Fb^2/EJ$

$= (1/2\ b + 1/6\ b\ )\ Fb\ 1/EJ\ - 1\ \ (-1)\ \ (-1)\ \ Fb^2/EJ = -1/3\ \ Fb^2/EJ$

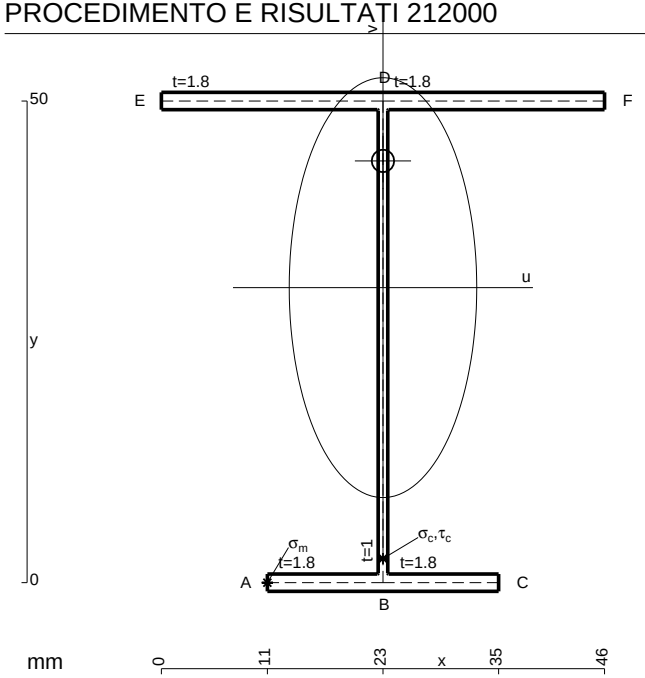

A = 176. mm^2
J_u = 83598. mm^4
J_v = 16674. mm^4
J_t = 152.7 mm^4
y_o = 13.16 mm
y_g = 30.63 mm
N = -710. N
T_y = -1775. N
M_x = -639000. Nmm
x_m = 11. mm
u_m = -12. mm
v_m = -30.63 mm
$\sigma_m = N/A - Mv/J_u$ = -238.1 N/mm^2
x_c = 23. mm
v_c = -30.63 mm
$\sigma_c = N/A - Mv/J_u$ = -238.1 N/mm^2
$\tau_c = TS^*/tJ_u$ = 28.09 N/mm^2
$\tau_g = TS^*/tJ_u$ = 28.09 N/mm^2
t_c = 710. mm
$\sigma_o = \sqrt{\sigma^2 + 3\tau^2}$ = 243. N/mm^2

ESΣ05.xxxx.174

@ Adolfo Zavelani Rossi, Politecnico di Milano, vers.27.03.13 01.12.25

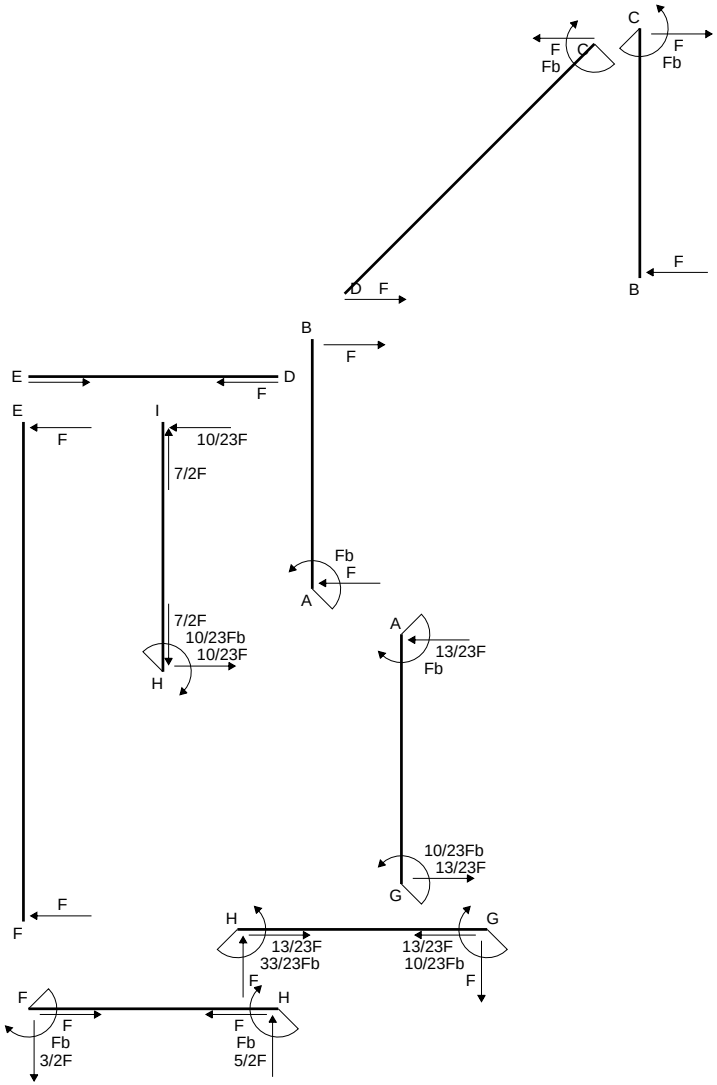
C
F
Fb
C
F
Fb
F
D
F
B
F
B
E
D
F
E
F
I
10/23F
7/2F
Fb
F
A
7/2F
10/23Fb
10/23F
H
A
13/23F
Fb
10/23Fb
13/23F
G
F
F
H
G
13/23F
33/23Fb
13/23F
10/23Fb
F
F
H
F
F
Fb
3/2F
F
Fb
5/2F

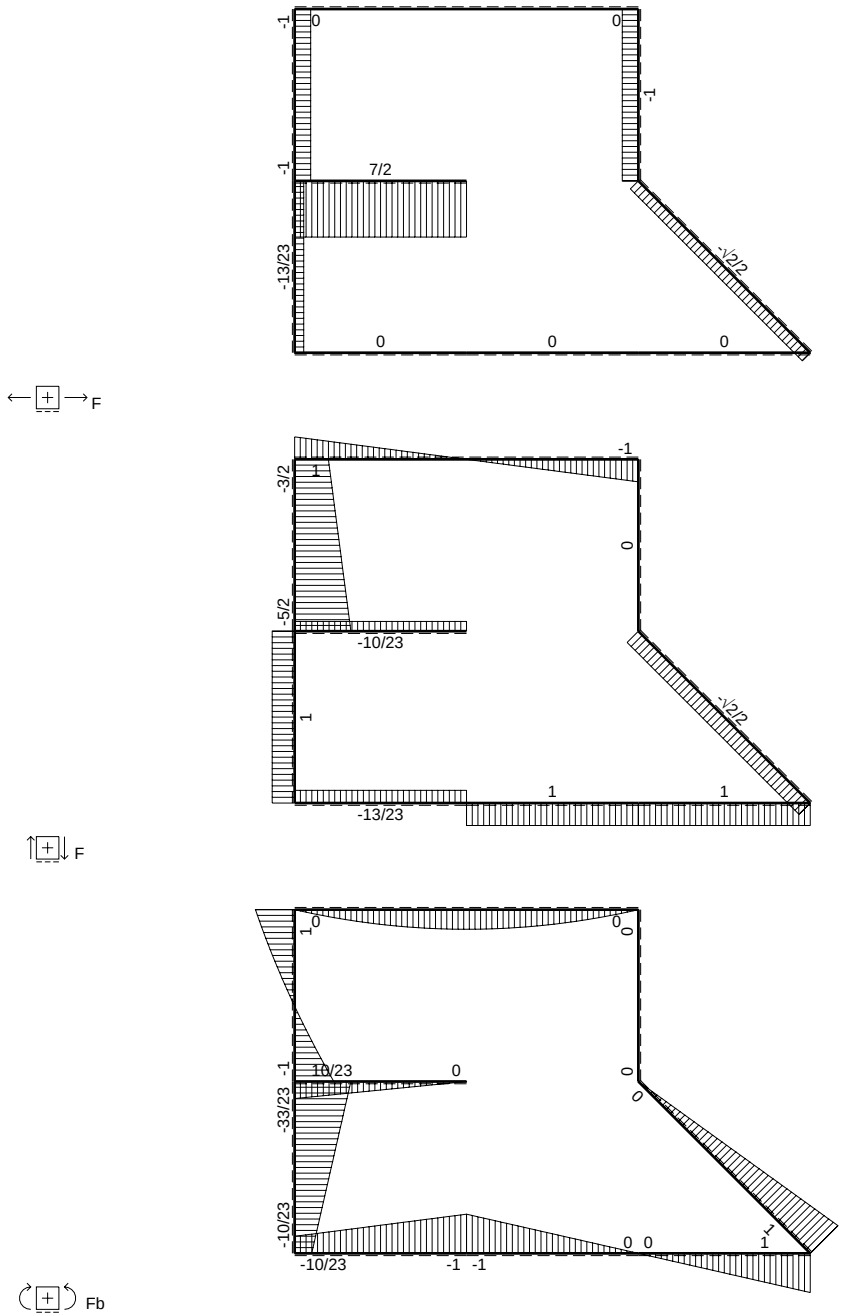
-1
0
0
-1
-1
7/2
-13/23
-√2/2
0
0
0
F
-1
-3/2
1
0
-5/2
-10/23
-√2/2
1
1
1
-13/23
F
1
0
0
-1
10/23
0
0
-33/23
-10/23
0 0
1
-10/23
-1 -1
Fb

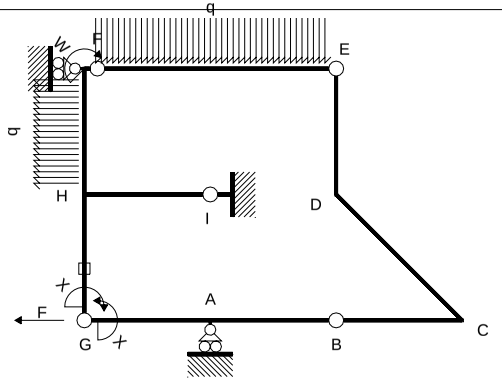

Schema di calcolo iperstatico

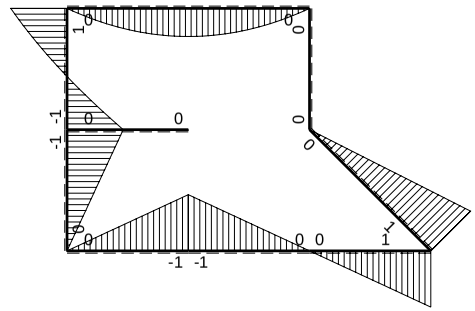

M_0 flessione da carichi assegnati

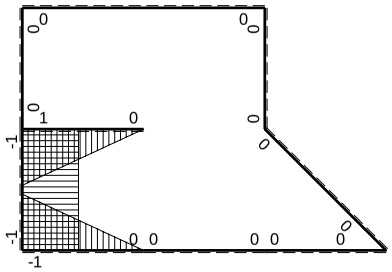

M_x flessione da iperstatica X=1

Quadro contributi PLV per iperstatica $X=W_{GA}$

→	$M_x(x)$	$M_o(x)$	M_xM_o	M_xM_x	$\int M_xM_o/EJdx$	$\int XM_xM_x/EJdx$
AB b	0	-Fb+Fx	0	0	0	0
BA b	0	Fx	0	0		
BC b	0	Fx	0	0	0	0
CB b	0	-Fb+Fx	0	0		
CD √2b	0	Fb-√2/2Fx	0	0	0	0
DE b	0	0	0	0	0	0
ED b	0	0	0	0		
EF 2b	0	$-Fx+1/2qx^2$	0	0	0	0
FE 2b	0	$Fx-1/2qx^2$	0	0		
GA b	-1+x/b	-Fx	$Fx-Fx^2/b$	$1-2x/b+x^2/b^2$	$1/6Fb^2/EJ$	$1/3Xb/EJ$
AG b	x/b	Fb-Fx	$Fx-Fx^2/b$	x^2/b^2		
FH b	0	$Fb-3/2Fx-1/2qx^2$	0	0	0	0
HF b	0	$Fb-5/2Fx+1/2qx^2$	0	0		
HI b	1-x/b	0	0	$1-2x/b+x^2/b^2$	0	$1/3Xb/EJ$
IH b	-x/b	0	0	x^2/b^2		
HG b	-1	-Fb+Fx	Fb-Fx	1	$1/2Fb^2/EJ$	Xb/EJ
GH b	1	Fx	Fx	1		
HG	elongazione asta $N_{1HG}\varepsilon_{HG}L_{HG}$				$-Fb^2/EJ$	
A	molla nodo $-V_{1A}(V_{0A}+XV_{1A})/k_A$				$-1/2Fb^2/EJ$	$1/4Xb/EJ$
	totali				$-5/6Fb^2/EJ$	$23/12Xb/EJ$
	iperstatica $X=W_{GA}$				10/23Fb	

Sviluppi di calcolo iperstatica

$L^{XX}_{GA} = \int_o^b (1 - 2\,x/b + x^2/b^2)\ 1/EJ\ dx = [\,x - x^2/b + 1/3\,x^3/b^2\,]_o^b\ 1/EJ$

$= (\,b - b + 1/3\,b\,)\ 1/EJ = 1/3\ b/EJ$

$L^{XX}_{AG} = \int_o^b (\,x^2/b^2\,)\ 1/EJ\ dx = [1/3\,x^3/b^2\,]_o^b\ 1/EJ$

$= (1/3\,b\,)\ 1/EJ = 1/3\ b/EJ$

$L^{XX}_{HI} = \int_o^b (1 - 2\,x/b + x^2/b^2)\ 1/EJ\ dx = [\,x - x^2/b + 1/3\,x^3/b^2\,]_o^b\ 1/EJ$

$= (\,b - b + 1/3\,b\,)\ 1/EJ = 1/3\ b/EJ$

$L^{XX}_{IH} = \int_o^b (\,x^2/b^2\,)\ 1/EJ\ dx = [1/3\,x^3/b^2\,]_o^b\ 1/EJ$

$= (1/3\,b\,)\ 1/EJ = 1/3\ b/EJ$

$L^{XX}_{HG} = \int_o^b (1)\ 1/EJ\ dx = [\,x\,]_o^b\ 1/EJ$

$= (\,b\,)\ 1/EJ = b/EJ$

$L^{XX}_{GH} = \int_o^b (1)\ 1/EJ\ dx = [\,x\,]_o^b\ 1/EJ$

$= (\,b\,)\ 1/EJ = b/EJ$

$L^{Xo}_{GA} = \int_o^b (\,x/b - x^2/b^2\,)\ Fb\ 1/EJ\ dx = [1/2\,x^2/b - 1/3\,x^3/b^2\,]_o^b\ Fb\ 1/EJ$

$= (1/2\,b - 1/3\,b\,)\ Fb\ 1/EJ = 1/6\ Fb^2/EJ$

$L^{Xo}_{AG} = \int_o^b (\,x/b - x^2/b^2\,)\ Fb\ 1/EJ\ dx = [1/2\,x^2/b - 1/3\,x^3/b^2\,]_o^b\ Fb\ 1/EJ$

$= (1/2\,b - 1/3\,b\,)\ Fb\ 1/EJ = 1/6\ Fb^2/EJ$

$L^{Xo}_{HG} = \int_o^b (1 - x/b\,)\ Fb\ 1/EJ\ dx - 1\ \ (-1)\ \ (-1)\ \ Fb^2/EJ = [\,x - 1/2\,x^2/b\,]_o^b\ Fb\ 1/EJ\ - 1\ \ (-1)\ \ (-1)\ \ Fb^2/EJ$

$= (\,b - 1/2\,b\,)\ Fb\ 1/EJ\ - 1\ \ (-1)\ \ (-1)\ \ Fb^2/EJ = -1/2\ \ Fb^2/EJ$

$L^{Xo}_{GH} = \int_o^b (\,x/b\,)\ Fb\ 1/EJ\ dx - 1\ \ (-1)\ \ (-1)\ \ Fb^2/EJ = [1/2\,x^2/b\,]_o^b\ Fb\ 1/EJ\ - 1\ \ (-1)\ \ (-1)\ \ Fb^2/EJ$

$= (1/2\,b\,)\ Fb\ 1/EJ\ - 1\ \ (-1)\ \ (-1)\ \ Fb^2/EJ = -1/2\ \ Fb^2/EJ$

PROCEDIMENTO E RISULTATI 237690 ESΣ05.xxxx.175

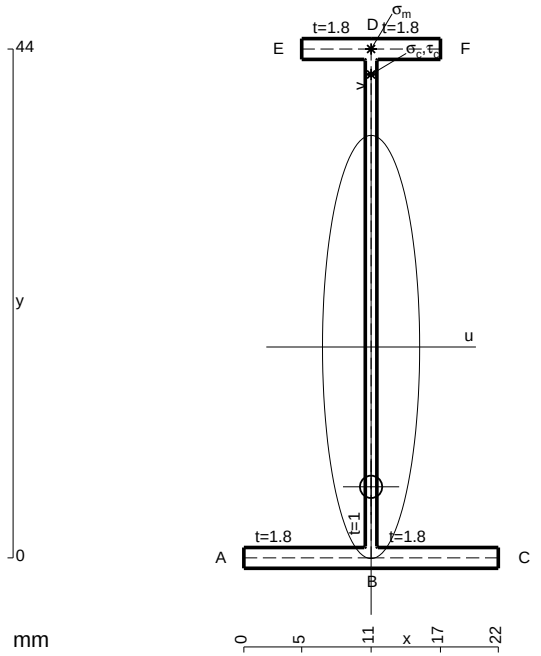

A = 105.2 mm^2
J_u = 35229. mm^4
J_v = 1856. mm^4
J_t = 80.76 mm^4
y_o = -12.09 mm
y_g = 18.24 mm
N = -490. N
T_y = -1225. N
M_x = -279300. Nmm
x_m = 11. mm
y_m = 44. mm
v_m = 25.76 mm
$\sigma_m = N/A - Mv/J_u$ = 199.6 N/mm^2
y_c = 2. mm
u_c = -11. mm
v_c = -16.24 mm
$\sigma_c = N/A - Mv/J_u$ = 199.6 N/mm^2
$\tau_c = TS^*/tJ_u$ = 19.35 N/mm^2
$\tau_g = TS^*/tJ_u$ = 19.35 N/mm^2
t_c = 490. mm
$\sigma_o = \sqrt{\sigma^2 + 3\tau^2}$ = 202.4 N/mm^2

@ Adolfo Zavelani Rossi, Politecnico di Milano, vers.27.03.13 01.12.25

ESΣ05.xxxx.175

@ Adolfo Zavelani Rossi, Politecnico di Milano, vers.27.03.13 01.12.25

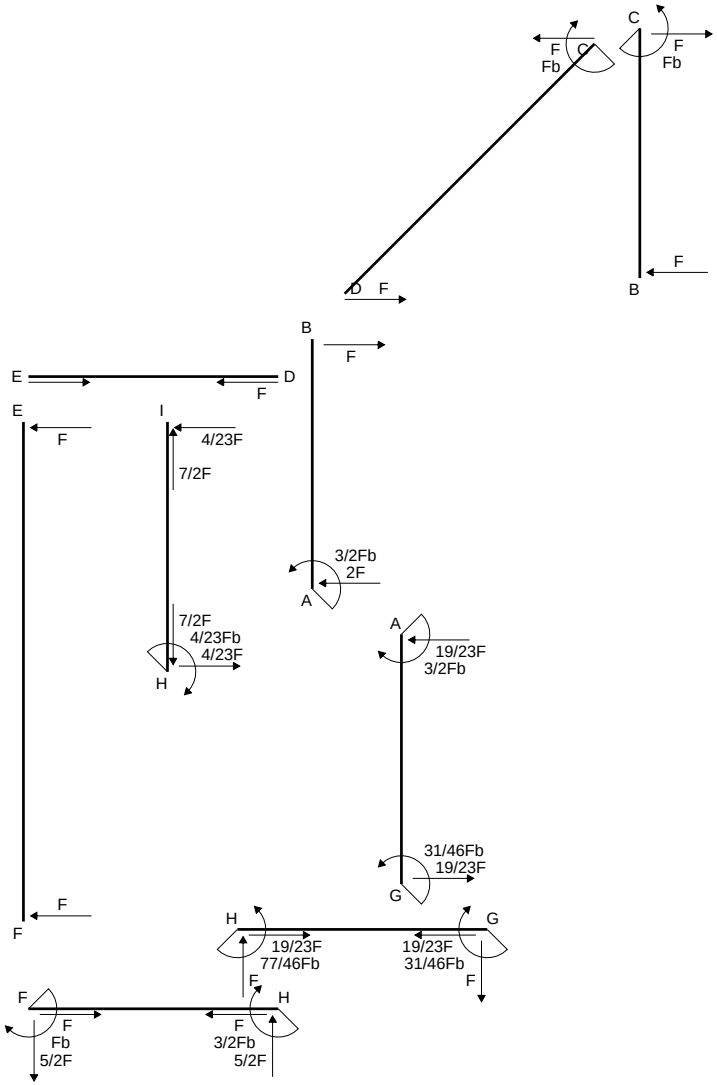
C
F
Fb
C
F
Fb
F
D
F
B
B
F
E
D
F
E
F
I
4/23F
7/2F
3/2Fb
2F
A
7/2F
4/23Fb
4/23F
H
A
19/23F
3/2Fb
31/46Fb
19/23F
G
F
F
H
G
19/23F
77/46Fb
19/23F
31/46Fb
F
F
H
F
Fb
5/2F
F
3/2Fb
5/2F

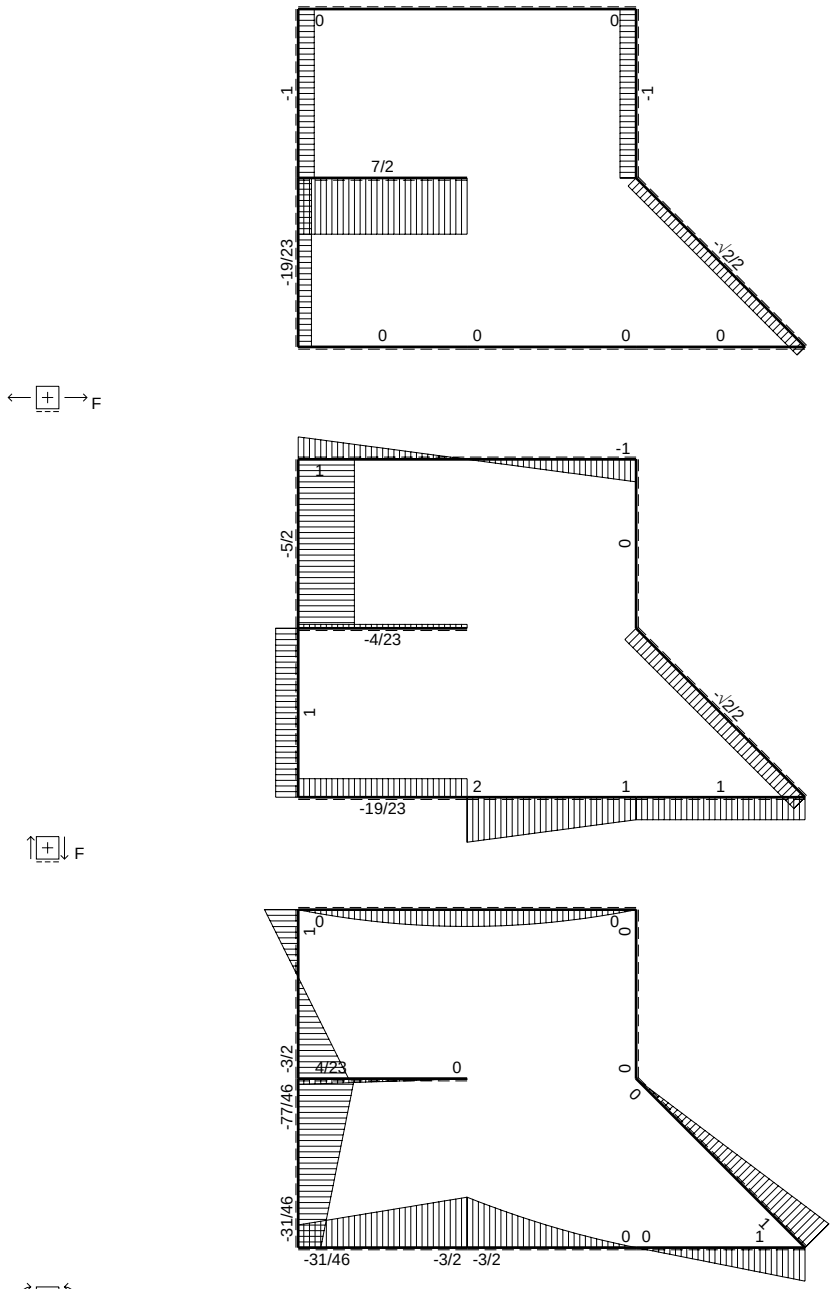
F
0
0
-1
-1
7/2
-19/23
-1/2/2
0
0
0
0
F
-1
1
-5/2
0
-4/23
1
-1/2/2
2
1
1
-19/23
F
1
0
0
-3/2
4/23
0
0
0
-77/46
-31/46
0 0
1
-31/46
-3/2
-3/2
Fb

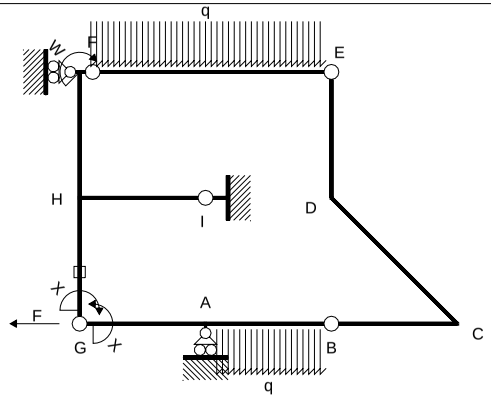

Schema di calcolo iperstatico

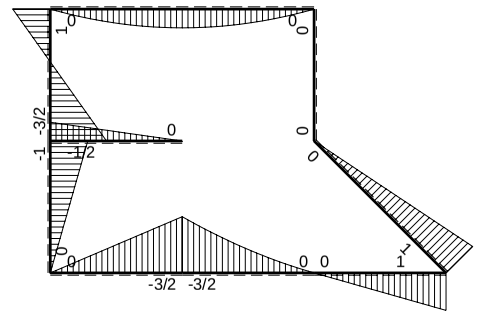

M_0 flessione da carichi assegnati

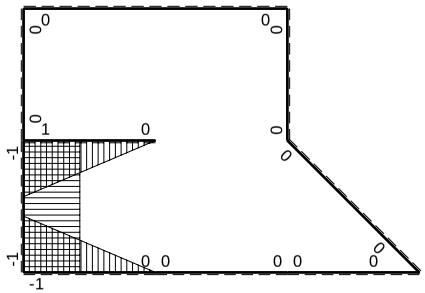

M_x flessione da iperstatica X=1

Quadro contributi PLV per iperstatica $X=W_{GA}$

→	$M_x(x)$	$M_0(x)$	M_xM_0	M_xM_x	$\int M_xM_0/EJdx$	$\int XM_xM_x/EJdx$
AB b	0	$-3/2Fb+2Fx-1/2qx^2$	0	0	0	0
BA b	0	$Fx+1/2qx^2$	0	0		
BC b	0	Fx	0	0	0	0
CB b	0	$-Fb+Fx$	0	0		
CD $\sqrt{2}b$	0	$Fb-\sqrt{2}/2Fx$	0	0	0	0
DE b	0	0	0	0	0	0
ED b	0	0	0	0		
EF 2b	0	$-Fx+1/2qx^2$	0	0	0	0
FE 2b	0	$Fx-1/2qx^2$	0	0		
GA b	$-1+x/b$	$-3/2Fx$	$3/2Fx-3/2Fx^2/b$	$1-2x/b+x^2/b^2$	$1/4Fb^2/EJ$	$1/3Xb/EJ$
AG b	x/b	$3/2Fb-3/2Fx$	$3/2Fx-3/2Fx^2/b$	x^2/b^2		
FH b	0	$Fb-5/2Fx$	0	0	0	0
HF b	0	$3/2Fb-5/2Fx$	0	0		
HI b	$1-x/b$	$-1/2Fb+1/2Fx$	$-1/2Fb+Fx-1/2Fx^2/b$	$1-2x/b+x^2/b^2$	$-1/6Fb^2/EJ$	$1/3Xb/EJ$
IH b	$-x/b$	$1/2Fx$	$-1/2Fx^2/b$	x^2/b^2		
HG b	-1	$-Fb+Fx$	$Fb-Fx$	1	$1/2Fb^2/EJ$	Xb/EJ
GH b	1	Fx	Fx	1		
HG	elongazione asta $N_{1HG}\varepsilon_{HG}L_{HG}$				$-Fb^2/EJ$	
A	molla nodo $-V_{1A}(V_{0A}+XV_{1A})/k_A$				$-7/8Fb^2/EJ$	$1/4Xb/EJ$
	totali				$-31/24Fb^2/EJ$	$23/12Xb/EJ$
	iperstatica $X=W_{GA}$				31/46Fb	

Sviluppi di calcolo iperstatica

$L^{XX}_{GA} = \int_o^b (1 - 2\,x/b + x^2/b^2)\ 1/EJ\ dx = [\ x - x^2/b + 1/3\ x^3/b^2\ ]_o^b\ 1/EJ$

$= (\ b - b + 1/3\ b\ )\ 1/EJ\ = 1/3\ b/EJ$

$L^{XX}_{AG} = \int_o^b (\ x^2/b^2\ )\ 1/EJ\ dx = [1/3\ x^3/b^2\ ]_o^b\ 1/EJ$

$= (1/3\ b\ )\ 1/EJ\ = 1/3\ b/EJ$

$L^{XX}_{HI} = \int_o^b (1 - 2\,x/b + x^2/b^2)\ 1/EJ\ dx = [\ x - x^2/b + 1/3\ x^3/b^2\ ]_o^b\ 1/EJ$

$= (\ b - b + 1/3\ b\ )\ 1/EJ\ = 1/3\ b/EJ$

$L^{XX}_{IH} = \int_o^b (\ x^2/b^2\ )\ 1/EJ\ dx = [1/3\ x^3/b^2\ ]_o^b\ 1/EJ$

$= (1/3\ b\ )\ 1/EJ\ = 1/3\ b/EJ$

$L^{XX}_{HG} = \int_o^b (1\ )\ 1/EJ\ dx = [\ x\ ]_o^b\ 1/EJ$

$= (\ b\ )\ 1/EJ\ =\ b/EJ$

$L^{XX}_{GH} = \int_o^b (1\ )\ 1/EJ\ dx = [\ x\ ]_o^b\ 1/EJ$

$= (\ b\ )\ 1/EJ\ =\ b/EJ$

$L^{Xo}_{GA} = \int_o^b (3/2\ x/b - 3/2\ x^2/b^2\ )\ Fb\ 1/EJ\ dx = [3/4\ x^2/b - 1/2\ x^3/b^2\ ]_o^b\ Fb\ 1/EJ$

$= (3/4\ b - 1/2\ b\ )\ Fb\ 1/EJ\ = 1/4\ \ Fb^2/EJ$

$L^{Xo}_{AG} = \int_o^b (3/2\ x/b - 3/2\ x^2/b^2\ )\ Fb\ 1/EJ\ dx = [3/4\ x^2/b - 1/2\ x^3/b^2\ ]_o^b\ Fb\ 1/EJ$

$= (3/4\ b - 1/2\ b\ )\ Fb\ 1/EJ\ = 1/4\ \ Fb^2/EJ$

$L^{Xo}_{HI} = \int_o^b (-1/2 + x/b - 1/2\ x^2/b^2\ )\ Fb\ 1/EJ\ dx = [-1/2\ x + 1/2\ x^2/b - 1/6\ x^3/b^2\ ]_o^b\ Fb\ 1/EJ$

$= (-1/2\ b + 1/2\ b - 1/6\ b\ )\ Fb\ 1/EJ\ = -1/6\ \ Fb^2/EJ$

$L^{Xo}_{IH} = \int_o^b (-1/2\ x^2/b^2\ )\ Fb\ 1/EJ\ dx = [-1/6\ x^3/b^2\ ]_o^b\ Fb\ 1/EJ$

$= (-1/6\ b\ )\ Fb\ 1/EJ\ = -1/6\ \ Fb^2/EJ$

$L^{Xo}_{HG} = \int_o^b (1 - x/b\ )\ Fb\ 1/EJ\ dx - 1\ \ (-1)\ \ (-1)\ \ Fb^2/EJ = [\ x - 1/2\ x^2/b\ ]_o^b\ Fb\ 1/EJ\ \ - 1\ \ (-1)\ \ (-1)\ \ Fb^2/EJ$

$= (\ b - 1/2\ b\ )\ Fb\ 1/EJ\ \ - 1\ \ (-1)\ \ (-1)\ \ Fb^2/EJ = -1/2\ \ Fb^2/EJ$

$L^{Xo}_{GH} = \int_o^b (\ x/b\ )\ Fb\ 1/EJ\ dx - 1\ \ (-1)\ \ (-1)\ \ Fb^2/EJ = [1/2\ x^2/b\ ]_o^b\ Fb\ 1/EJ\ \ - 1\ \ (-1)\ \ (-1)\ \ Fb^2/EJ$

$= (1/2\ b\ )\ Fb\ 1/EJ\ \ - 1\ \ (-1)\ \ (-1)\ \ Fb^2/EJ = -1/2\ \ Fb^2/EJ$

PROCEDIMENTO E RISULTATI Nome: ESΣ05.xxxx.176

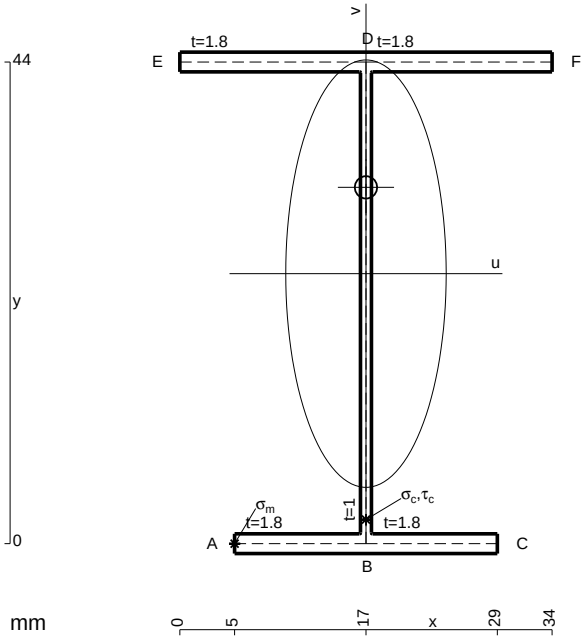

A = 148.4 mm^2
J_u = 56572. mm^4
J_v = 7969. mm^4
J_t = 127.4 mm^4
y_o = 7.883 mm
y_g = 24.67 mm
N = -520. N
T_y = -1300. N
M_x = -468000. Nmm
x_m = 5. mm
u_m = -12. mm
v_m = -24.67 mm
$\sigma_m = N/A - Mv/J_u$ = -207.6 N/mm^2
x_c = 17. mm
v_c = -24.67 mm
$\sigma_c = N/A - Mv/J_u$ = -207.6 N/mm^2
$\tau_c = TS^*/tJ_u$ = 24.49 N/mm^2
$\tau_g = TS^*/tJ_u$ = 24.49 N/mm^2
t_c = 520. mm
$\sigma_o = \sqrt{\sigma^2 + 3\tau^2}$ = 211.9 N/mm^2

@ Adolfo Zavelani Rossi, Politecnico di Milano, vers.27.03.13 01.12.25

ESΣ05.xxxx.176

@ Adolfo Zavelani Rossi, Politecnico di Milano, vers.27.03.13 01.12.25

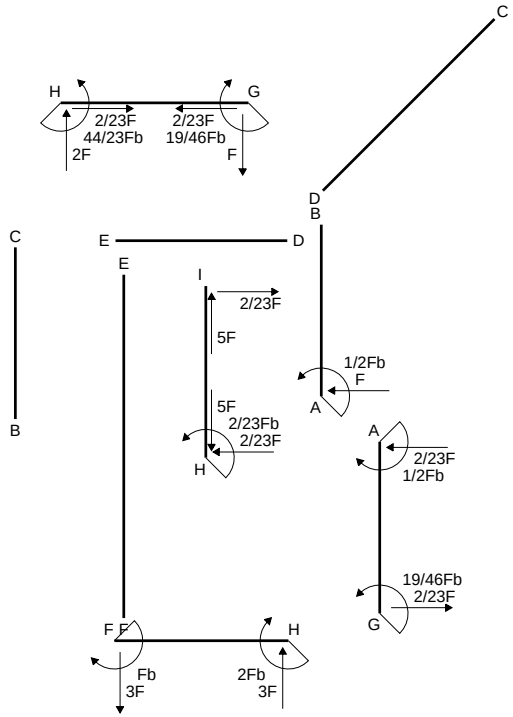
H
G
2/23F
44/23Fb
2F
2/23F
19/46Fb
F
C
D
B
C
E
D
B
E
I
2/23F
5F
1/2Fb
F
A
5F
2/23Fb
2/23F
H
A
2/23F
1/2Fb
19/46Fb
2/23F
G
F F
H
Fb
3F
2Fb
3F

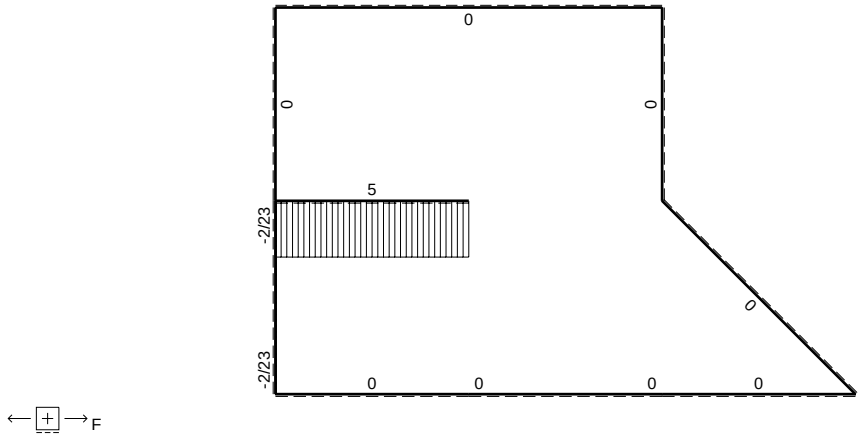
F
0
0
0
5
-2/23
-2/23
0
0
0
0
0

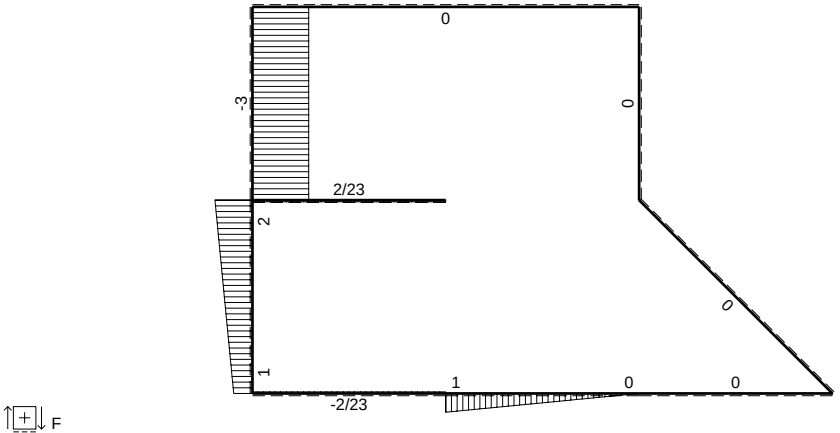
F
0
-3
0
2/23
2
0
1
-2/23
1
0
0

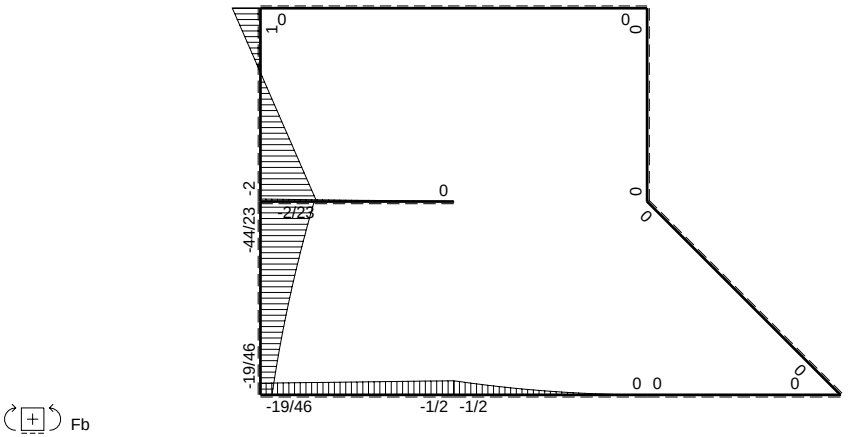
Fb
1
0
0
0
-2
0
-2/23
-44/23
0
0
-19/46
0 0
0
-19/46
-1/2 -1/2

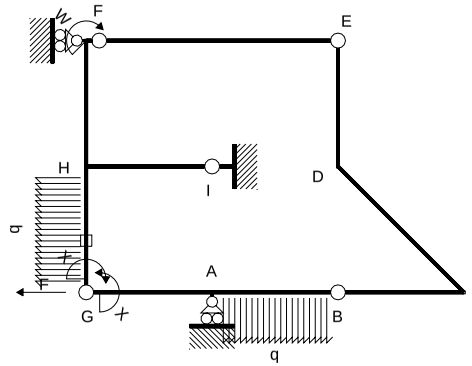

Schema di calcolo iperstatico

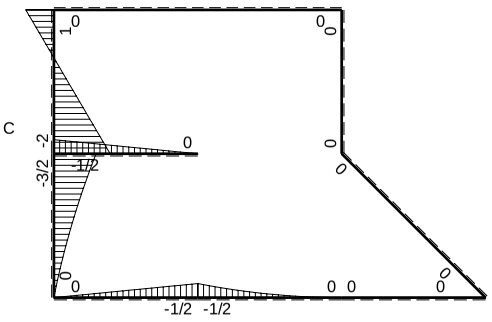

M_0 flessione da carichi assegnati

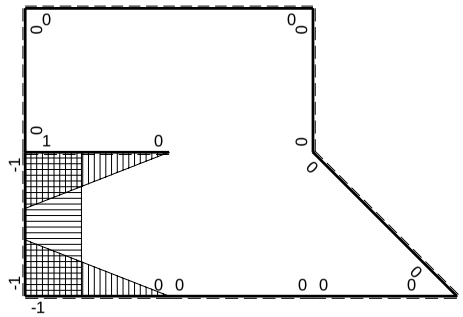

M_x flessione da iperstatica X=1

Quadro contributi PLV per iperstatica $X=W_{GA}$

→	$M_x(x)$	$M_0(x)$	M_xM_0	M_xM_x	$\int M_xM_0/EJdx$	$\int XM_xM_x/EJdx$
AB b	0	$-1/2Fb+Fx-1/2qx^2$	0	0	0	0
BA b	0	$1/2qx^2$	0	0		
BC b	0	0	0	0	0	0
CB b	0	0	0	0		
CD $\sqrt{2}$b	0	0	0	0	0	0
DE b	0	0	0	0	0	0
ED b	0	0	0	0		
EF 2b	0	0	0	0	0	0
FE 2b	0	0	0	0		
GA b	-1+x/b	$-1/2Fx$	$1/2Fx-1/2Fx^2/b$	$1-2x/b+x^2/b^2$	$1/12Fb^2/EJ$	1/3Xb/EJ
AG b	x/b	$1/2Fb-1/2Fx$	$1/2Fx-1/2Fx^2/b$	x^2/b^2		
FH b	0	Fb-3Fx	0	0	0	0
HF b	0	2Fb-3Fx	0	0		
HI b	1-x/b	$-1/2Fb+1/2Fx$	$-1/2Fb+Fx-1/2Fx^2/b$	$1-2x/b+x^2/b^2$	$-1/6Fb^2/EJ$	1/3Xb/EJ
IH b	-x/b	$1/2Fx$	$-1/2Fx^2/b$	x^2/b^2		
HG b	-1	$-3/2Fb+2Fx-1/2qx^2$	$3/2Fb-2Fx+1/2Fx^2/b$	1	$2/3Fb^2/EJ$	Xb/EJ
GH b	1	$Fx+1/2qx^2$	$Fx+1/2Fx^2/b$	1		
HG	elongazione asta $N_{1HG}\varepsilon_{HG}L_{HG}$				$-Fb^2/EJ$	
A	molla nodo $-V_{1A}(V_{0A}+XV_{1A})/k_A$				$-3/8Fb^2/EJ$	1/4Xb/EJ
	totali				$-19/24Fb^2/EJ$	23/12Xb/EJ
	iperstatica $X=W_{GA}$				19/46Fb	

Sviluppi di calcolo iperstatica

$L^{XX}_{GA} = \int_o^b (1 - 2\,x/b + x^2/b^2)\ 1/EJ\ dx = [\ x - x^2/b + 1/3\ x^3/b^2\ ]_o^b\ 1/EJ$

$= (\ b - b + 1/3\ b\ )\ 1/EJ\ = 1/3\ b/EJ$

$L^{XX}_{AG} = \int_o^b (\ x^2/b^2\ )\ 1/EJ\ dx = [1/3\ x^3/b^2\ ]_o^b\ 1/EJ$

$= (1/3\ b\ )\ 1/EJ\ = 1/3\ b/EJ$

$L^{XX}_{HI} = \int_o^b (1 - 2\,x/b + x^2/b^2)\ 1/EJ\ dx = [\ x - x^2/b + 1/3\ x^3/b^2\ ]_o^b\ 1/EJ$

$= (\ b - b + 1/3\ b\ )\ 1/EJ\ = 1/3\ b/EJ$

$L^{XX}_{IH} = \int_o^b (\ x^2/b^2\ )\ 1/EJ\ dx = [1/3\ x^3/b^2\ ]_o^b\ 1/EJ$

$= (1/3\ b\ )\ 1/EJ\ = 1/3\ b/EJ$

$L^{XX}_{HG} = \int_o^b (1\ )\ 1/EJ\ dx = [\ x\ ]_o^b\ 1/EJ$

$= (\ b\ )\ 1/EJ\ =\ b/EJ$

$L^{XX}_{GH} = \int_o^b (1\ )\ 1/EJ\ dx = [\ x\ ]_o^b\ 1/EJ$

$= (\ b\ )\ 1/EJ\ =\ b/EJ$

$L^{Xo}_{GA} = \int_o^b (1/2\ x/b - 1/2\ x^2/b^2\ )\ Fb\ 1/EJ\ dx = [1/4\ x^2/b - 1/6\ x^3/b^2\ ]_o^b\ Fb\ 1/EJ$

$= (1/4\ b - 1/6\ b\ )\ Fb\ 1/EJ\ = 1/12\ \ Fb^2/EJ$

$L^{Xo}_{AG} = \int_o^b (1/2\ x/b - 1/2\ x^2/b^2\ )\ Fb\ 1/EJ\ dx = [1/4\ x^2/b - 1/6\ x^3/b^2\ ]_o^b\ Fb\ 1/EJ$

$= (1/4\ b - 1/6\ b\ )\ Fb\ 1/EJ\ = 1/12\ \ Fb^2/EJ$

$L^{Xo}_{HI} = \int_o^b (-1/2 + x/b - 1/2\ x^2/b^2\ )\ Fb\ 1/EJ\ dx = [-1/2\ x + 1/2\ x^2/b - 1/6\ x^3/b^2\ ]_o^b\ Fb\ 1/EJ$

$= (-1/2\ b + 1/2\ b - 1/6\ b\ )\ Fb\ 1/EJ\ = -1/6\ \ Fb^2/EJ$

$L^{Xo}_{IH} = \int_o^b (-1/2\ x^2/b^2\ )\ Fb\ 1/EJ\ dx = [-1/6\ x^3/b^2\ ]_o^b\ Fb\ 1/EJ$

$= (-1/6\ b\ )\ Fb\ 1/EJ\ = -1/6\ \ Fb^2/EJ$

$L^{Xo}_{HG} = \int_o^b (3/2 - 2\,x/b + 1/2\ x^2/b^2\ )\ Fb\ 1/EJ\ dx - 1\ \ (-1)\ \ (-1)\ \ Fb^2/EJ$

$= [3/2\ x - x^2/b + 1/6\ x^3/b^2\ ]_o^b\ Fb\ 1/EJ\ - 1\ \ (-1)\ \ (-1)\ \ Fb^2/EJ$

$= (3/2\ b - b + 1/6\ b\ )\ Fb\ 1/EJ\ - 1\ \ (-1)\ \ (-1)\ \ Fb^2/EJ = -1/3\ \ Fb^2/EJ$

$L^{Xo}_{GH} = \int_o^b (\ x/b + 1/2\ x^2/b^2\ )\ Fb\ 1/EJ\ dx - 1\ \ (-1)\ \ (-1)\ \ Fb^2/EJ$

$= [1/2\ x^2/b + 1/6\ x^3/b^2\ ]_o^b\ Fb\ 1/EJ\ - 1\ \ (-1)\ \ (-1)\ \ Fb^2/EJ$

$= (1/2\ b + 1/6\ b\ )\ Fb\ 1/EJ\ - 1\ \ (-1)\ \ (-1)\ \ Fb^2/EJ = -1/3\ \ Fb^2/EJ$

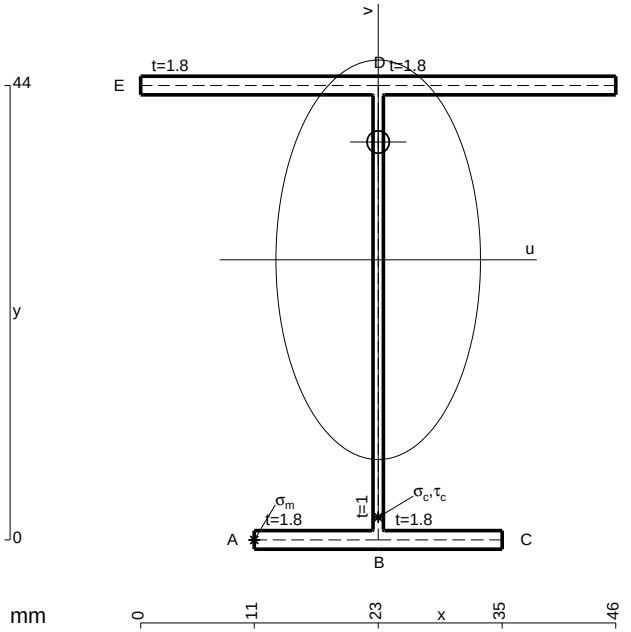

A = 170. mm^2
J_u = 63618. mm^4
J_v = 16674. mm^4
J_t = 150.7 mm^4
y_o = 11.4 mm
y_g = 27.12 mm
T_y = -1200. N
M_x = -512000. Nmm
x_m = 11. mm
u_m = -12. mm
v_m = -27.12 mm
$\sigma_m = -Mv/J_u$ = -218.3 N/mm^2
x_c = 23. mm
v_c = -27.12 mm
$\sigma_c = -Mv/J_u$ = -218.3 N/mm^2
$\tau_c = TS^*/tJ_u$ = 22.1 N/mm^2
$\tau_g = TS^*/tJ_u$ = 22.1 N/mm^2
t_c = 400. mm
$\sigma_o = \sqrt{\sigma^2 + 3\tau^2}$ = 221.6 N/mm^2

ESΣ05.xxxx.177

@ Adolfo Zavelani Rossi, Politecnico di Milano, vers.27.03.13 01.12.25

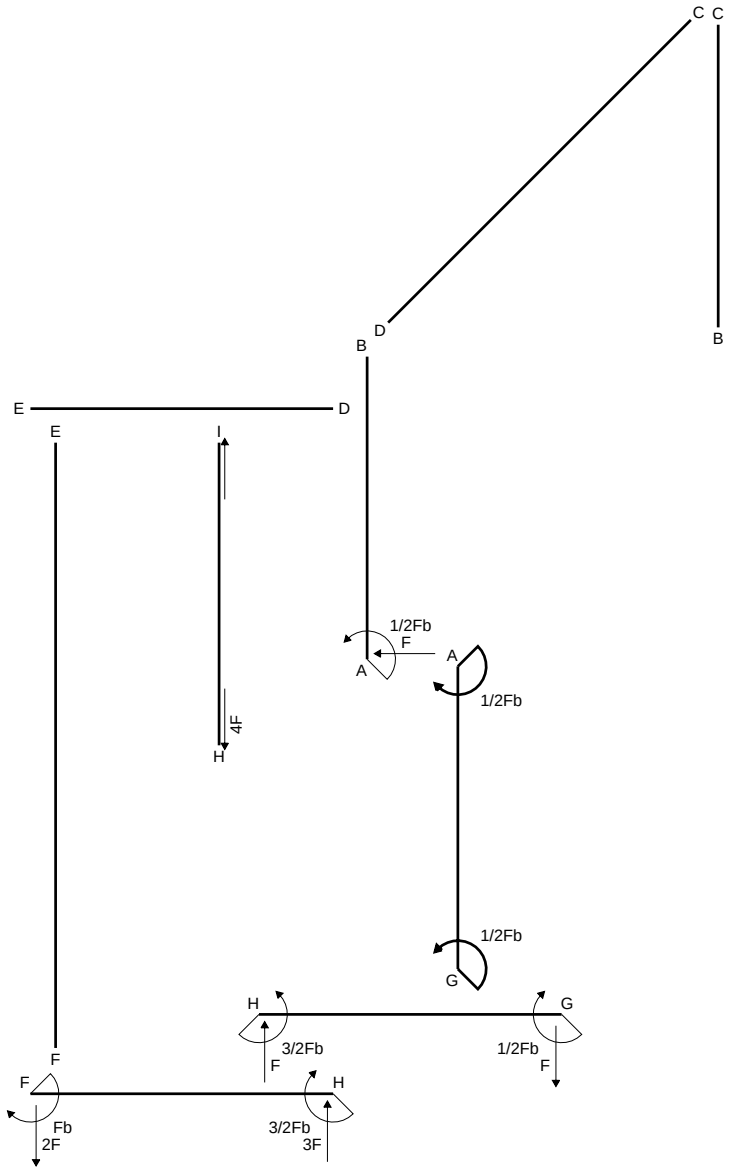
C C
D
B
B
E
D
E
I
4F
H
1/2Fb
F
A
A
1/2Fb
1/2Fb
G
H
G
3/2Fb
F
1/2Fb
F
F
F
H
Fb
2F
3/2Fb
3F

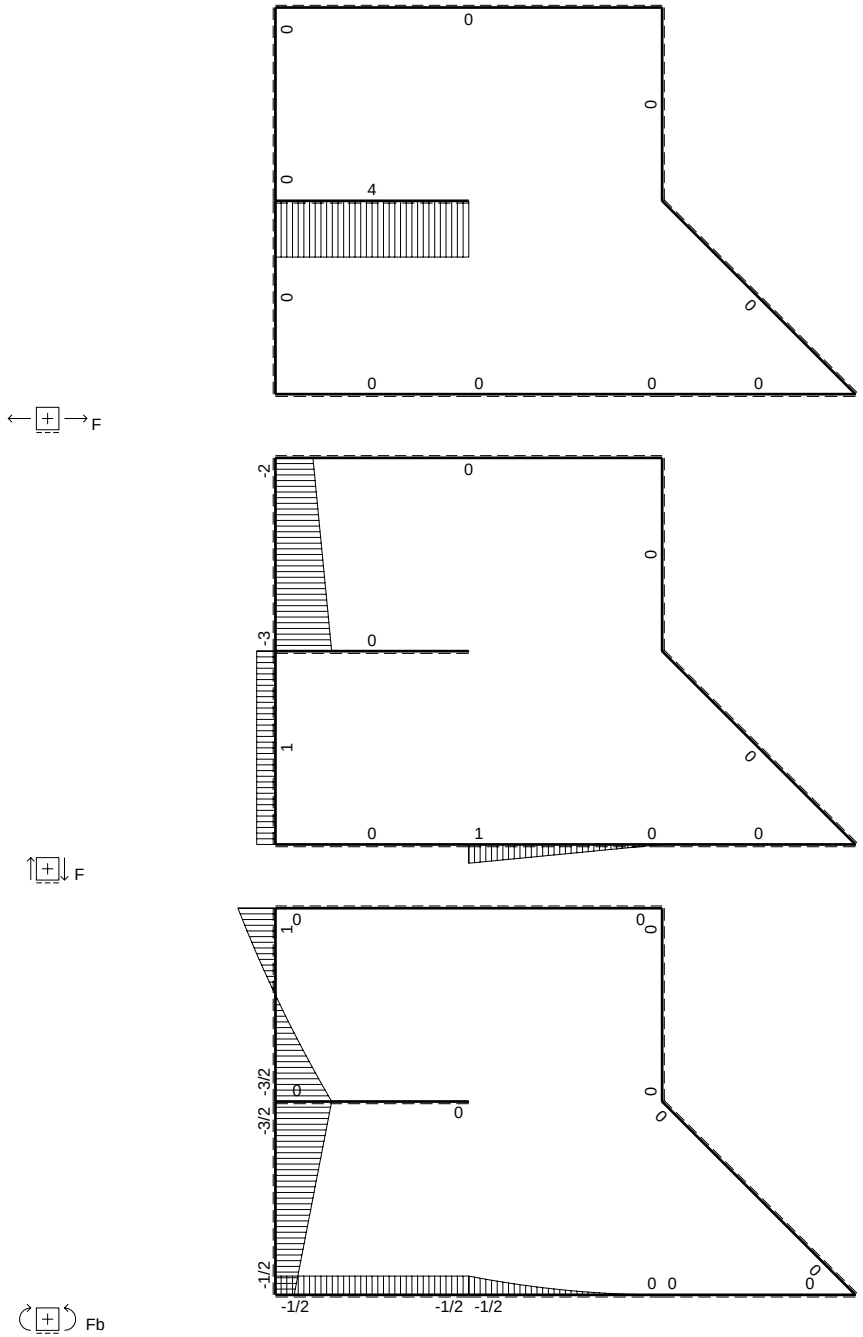
F
F
Fb

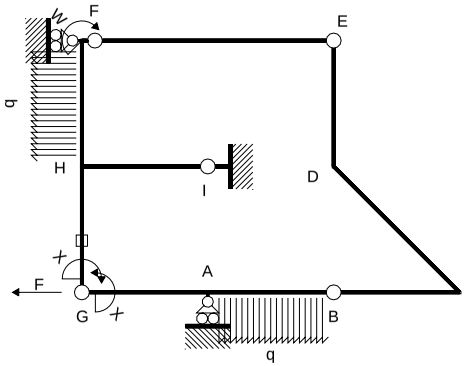

Schema di calcolo iperstatico

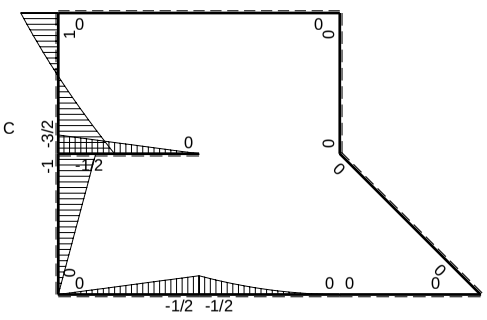

M_0 flessione da carichi assegnati

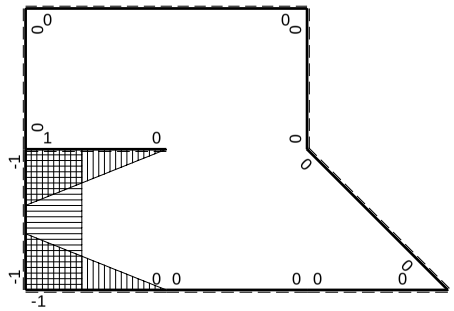

M_x flessione da iperstatica X=1

Quadro contributi PLV per iperstatica $X=W_{GA}$

→	$M_x(x)$	$M_0(x)$	M_xM_0	M_xM_x	$\int M_xM_0/EJdx$	$\int XM_xM_x/EJdx$
AB b	0	$-1/2Fb+Fx-1/2qx^2$	0	0	0	0
BA b	0	$1/2qx^2$	0	0		
BC b	0	0	0	0	0	0
CB b	0	0	0	0		
CD √2b	0	0	0	0	0	0
DE b	0	0	0	0	0	0
ED b	0	0	0	0		
EF 2b	0	0	0	0	0	0
FE 2b	0	0	0	0		
GA b	-1+x/b	-1/2Fx	$1/2Fx-1/2Fx^2/b$	$1-2x/b+x^2/b^2$	$1/12Fb^2/EJ$	1/3Xb/EJ
AG b	x/b	1/2Fb-1/2Fx	$1/2Fx-1/2Fx^2/b$	x^2/b^2		
FH b	0	$Fb-2Fx-1/2qx^2$	0	0	0	0
HF b	0	$3/2Fb-3Fx+1/2qx^2$	0	0		
HI b	1-x/b	$-1/2Fb+1/2Fx$	$-1/2Fb+Fx-1/2Fx^2/b$	$1-2x/b+x^2/b^2$	$-1/6Fb^2/EJ$	1/3Xb/EJ
IH b	-x/b	1/2Fx	$-1/2Fx^2/b$	x^2/b^2		
HG b	-1	-Fb+Fx	Fb-Fx	1	$1/2Fb^2/EJ$	Xb/EJ
GH b	1	Fx	Fx	1		
HG	elongazione asta $N_{1HG}\varepsilon_{HG}L_{HG}$				$-Fb^2/EJ$	
A	molla nodo $-V_{1A}(V_{0A}+XV_{1A})/k_A$				$-3/8Fb^2/EJ$	1/4Xb/EJ
	totali				$-23/24Fb^2/EJ$	23/12Xb/EJ
	iperstatica $X=W_{GA}$				1/2Fb	

Sviluppi di calcolo iperstatica

$L^{XX}_{GA} = \int_o^b (1 - 2\,x/b + x^2/b^2)\ 1/EJ\ dx = [\ x - x^2/b + 1/3\ x^3/b^2\ ]_o^b\ 1/EJ$

$= (\ b - b + 1/3\ b\ )\ 1/EJ\ = 1/3\ b/EJ$

$L^{XX}_{AG} = \int_o^b (\ x^2/b^2\ )\ 1/EJ\ dx = [1/3\ x^3/b^2\ ]_o^b\ 1/EJ$

$= (1/3\ b\ )\ 1/EJ\ = 1/3\ b/EJ$

$L^{XX}_{HI} = \int_o^b (1 - 2\,x/b + x^2/b^2)\ 1/EJ\ dx = [\ x - x^2/b + 1/3\ x^3/b^2\ ]_o^b\ 1/EJ$

$= (\ b - b + 1/3\ b\ )\ 1/EJ\ = 1/3\ b/EJ$

$L^{XX}_{IH} = \int_o^b (\ x^2/b^2\ )\ 1/EJ\ dx = [1/3\ x^3/b^2\ ]_o^b\ 1/EJ$

$= (1/3\ b\ )\ 1/EJ\ = 1/3\ b/EJ$

$L^{XX}_{HG} = \int_o^b (1\ )\ 1/EJ\ dx = [\ x\ ]_o^b\ 1/EJ$

$= (\ b\ )\ 1/EJ\ =\ b/EJ$

$L^{XX}_{GH} = \int_o^b (1\ )\ 1/EJ\ dx = [\ x\ ]_o^b\ 1/EJ$

$= (\ b\ )\ 1/EJ\ =\ b/EJ$

$L^{Xo}_{GA} = \int_o^b (1/2\ x/b - 1/2\ x^2/b^2\ )\ Fb\ 1/EJ\ dx = [1/4\ x^2/b - 1/6\ x^3/b^2\ ]_o^b\ Fb\ 1/EJ$

$= (1/4\ b - 1/6\ b\ )\ Fb\ 1/EJ\ = 1/12\ \ Fb^2/EJ$

$L^{Xo}_{AG} = \int_o^b (1/2\ x/b - 1/2\ x^2/b^2\ )\ Fb\ 1/EJ\ dx = [1/4\ x^2/b - 1/6\ x^3/b^2\ ]_o^b\ Fb\ 1/EJ$

$= (1/4\ b - 1/6\ b\ )\ Fb\ 1/EJ\ = 1/12\ \ Fb^2/EJ$

$L^{Xo}_{HI} = \int_o^b (-1/2 + x/b - 1/2\ x^2/b^2\ )\ Fb\ 1/EJ\ dx = [-1/2\ x + 1/2\ x^2/b - 1/6\ x^3/b^2\ ]_o^b\ Fb\ 1/EJ$

$= (-1/2\ b + 1/2\ b - 1/6\ b\ )\ Fb\ 1/EJ\ = -1/6\ \ Fb^2/EJ$

$L^{Xo}_{IH} = \int_o^b (-1/2\ x^2/b^2\ )\ Fb\ 1/EJ\ dx = [-1/6\ x^3/b^2\ ]_o^b\ Fb\ 1/EJ$

$= (-1/6\ b\ )\ Fb\ 1/EJ\ = -1/6\ \ Fb^2/EJ$

$L^{Xo}_{HG} = \int_o^b (1 - x/b\ )\ Fb\ 1/EJ\ dx - 1\ \ (-1)\ \ (-1)\ \ Fb^2/EJ = [\ x - 1/2\ x^2/b\ ]_o^b\ Fb\ 1/EJ\ \ - 1\ \ (-1)\ \ (-1)\ \ Fb^2/EJ$

$= (\ b - 1/2\ b\ )\ Fb\ 1/EJ\ \ - 1\ \ (-1)\ \ (-1)\ \ Fb^2/EJ = -1/2\ \ Fb^2/EJ$

$L^{Xo}_{GH} = \int_o^b (\ x/b\ )\ Fb\ 1/EJ\ dx - 1\ \ (-1)\ \ (-1)\ \ Fb^2/EJ = [1/2\ x^2/b\ ]_o^b\ Fb\ 1/EJ\ \ - 1\ \ (-1)\ \ (-1)\ \ Fb^2/EJ$

$= (1/2\ b\ )\ Fb\ 1/EJ\ \ - 1\ \ (-1)\ \ (-1)\ \ Fb^2/EJ = -1/2\ \ Fb^2/EJ$

PROCEDIMENTO E RISULTATI Nome: ESΣ05.xxxx.178

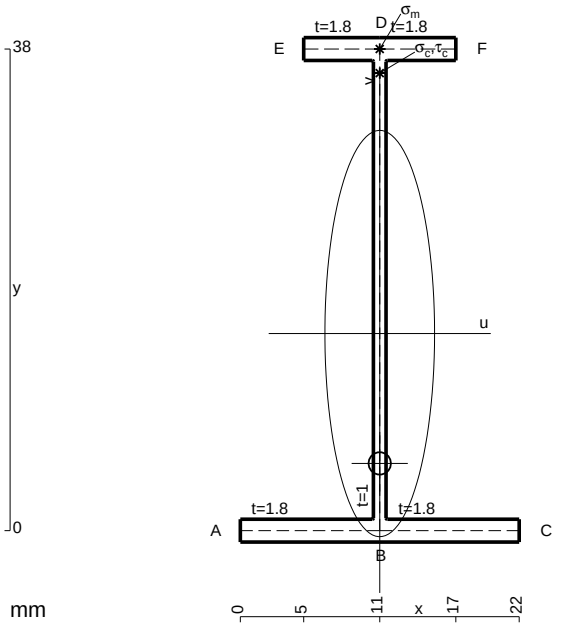

A = 99.2 mm^2
J_u = 25487. mm^4
J_v = 1856. mm^4
J_t = 78.76 mm^4
y_o = -10.25 mm
y_g = 15.55 mm
T_y = -900. N
M_x = -256500. Nmm
x_m = 11. mm
y_m = 38. mm
v_m = 22.45 mm
$\sigma_m = -Mv/J_u$ = 225.9 N/mm^2
y_c = 2. mm
u_c = -11. mm
v_c = -13.55 mm
$\sigma_c = -Mv/J_u$ = 225.9 N/mm^2
$\tau_c = TS^*/tJ_u$ = 17.12 N/mm^2
$\tau_g = TS^*/tJ_u$ = 17.12 N/mm^2
t_c = 300. mm
$\sigma_o = \sqrt{\sigma^2 + 3\tau^2}$ = 227.9 N/mm^2

@ Adolfo Zavelani Rossi, Politecnico di Milano, vers.27.03.13 01.12.25

ESΣ05.xxxx.178

@ Adolfo Zavelani Rossi, Politecnico di Milano, vers.27.03.13 01.12.25

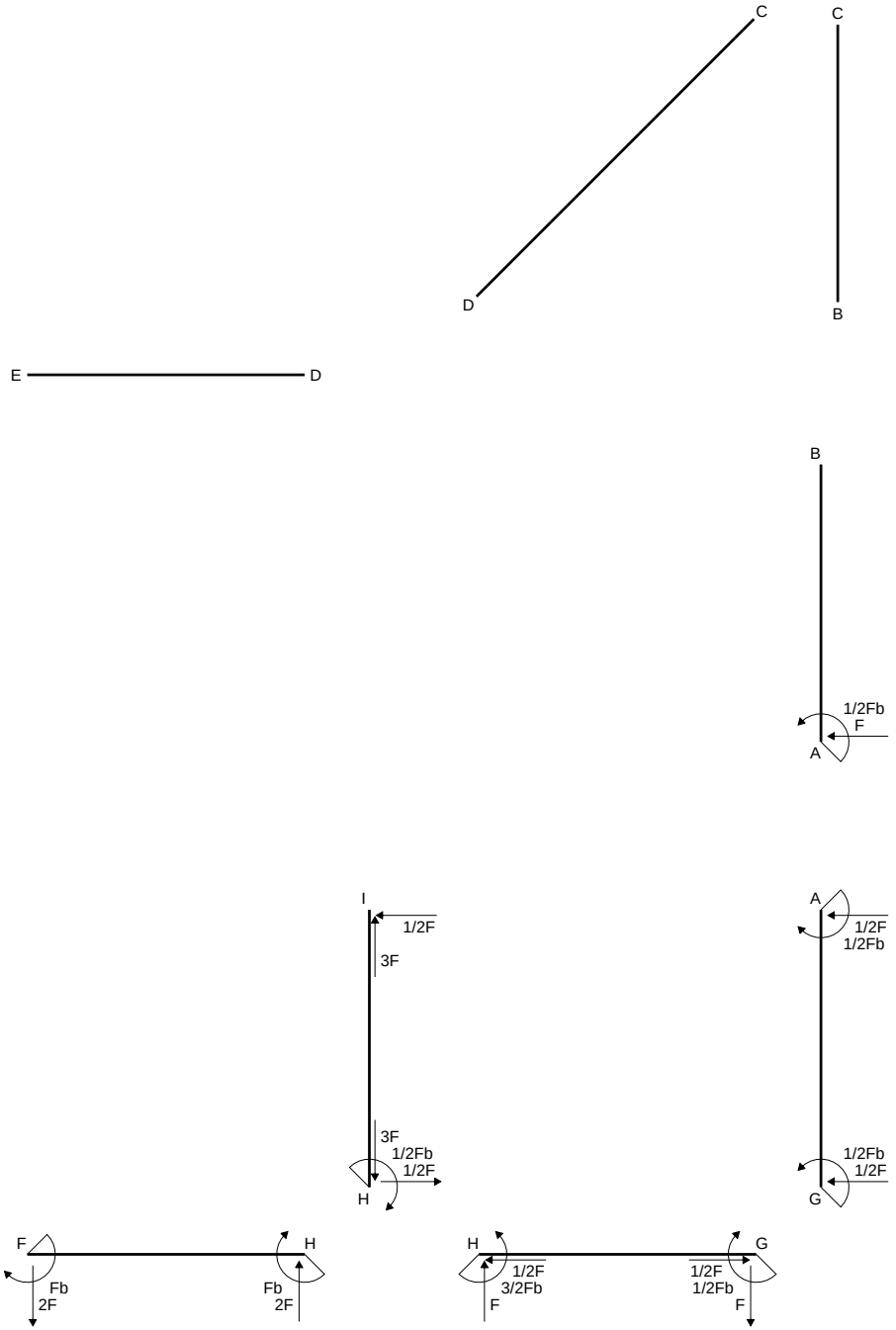
C
C
D
B
E
D
B
1/2Fb
F
A
E
F
I
1/2F
3F
3F
1/2Fb
1/2F
H
A
1/2F
1/2Fb
1/2Fb
1/2F
G
F
H
Fb
2F
Fb
2F
H
G
1/2F
3/2Fb
F
1/2F
1/2Fb
F

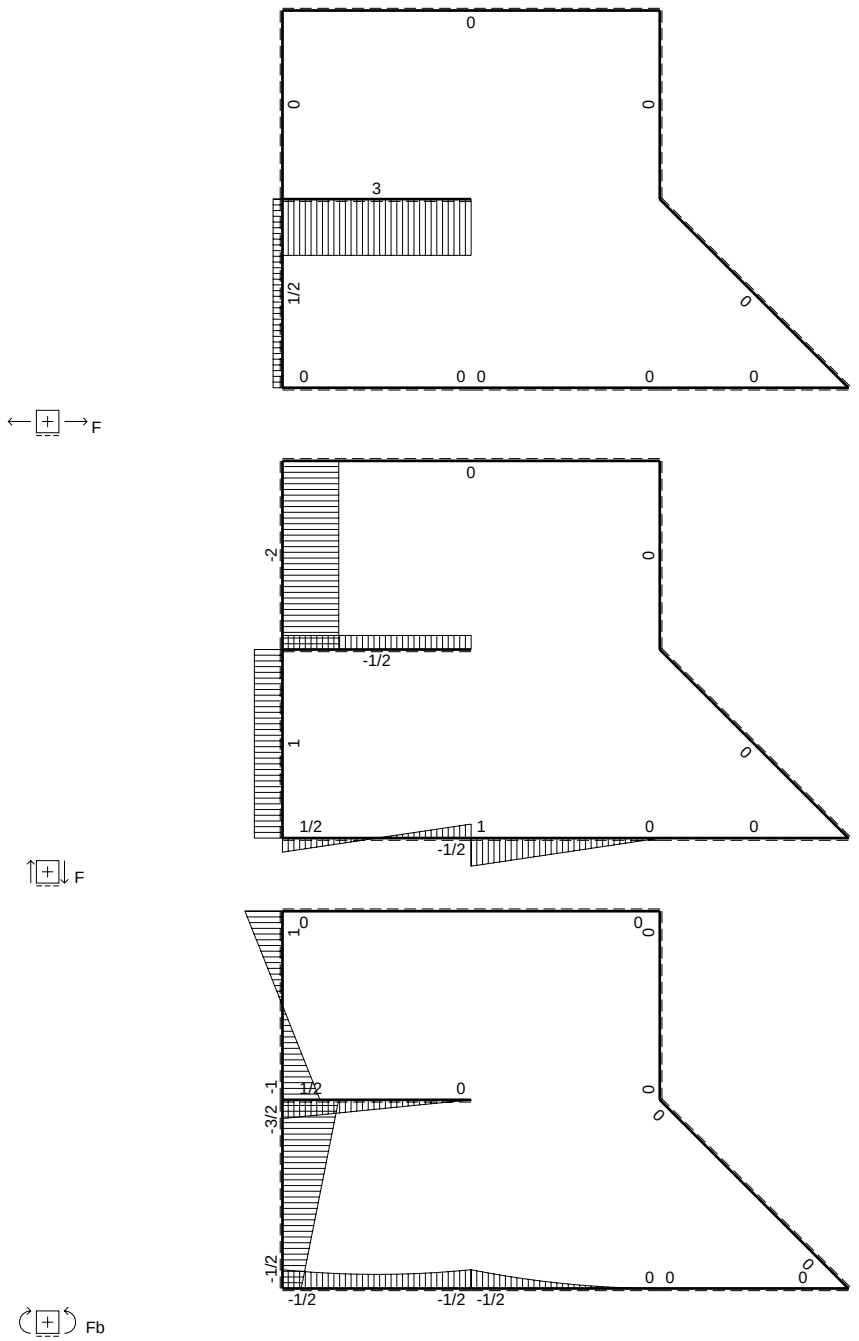
0
0
0
3
1/2
0
0
0 0
0
0
F
0
-2
0
-1/2
1
0
1/2
1
0
0
-1/2
F
1
0
0
0
-3/2
-1
1/2
0
0
0
-1/2
0 0
0
-1/2
-1/2 -1/2
Fb

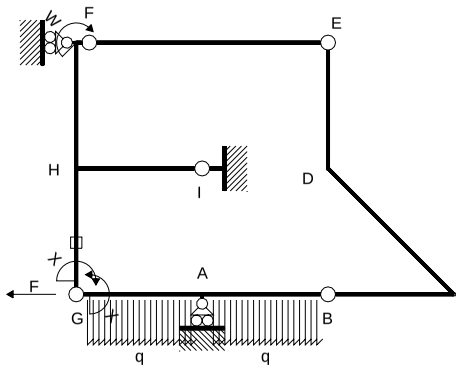

Schema di calcolo iperstatico

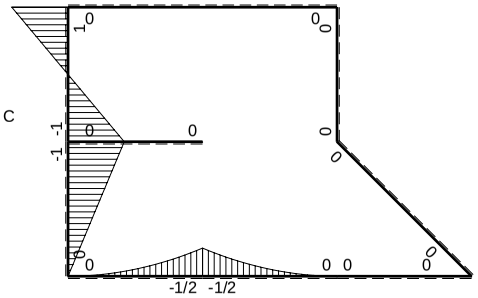

M_0 flessione da carichi assegnati

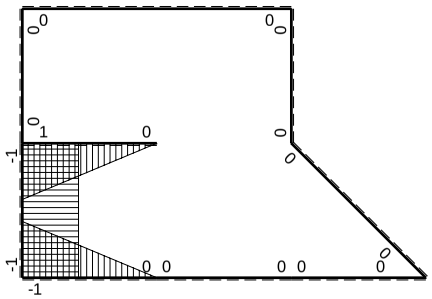

M_x flessione da iperstatica X=1

PROCEDIMENTO E RISULTATI Nome: ESΣ05.xxxx.179

Quadro contributi PLV per iperstatica $X=W_{GA}$

→	$M_x(x)$	$M_o(x)$	M_xM_o	M_xM_x	$\int M_xM_o/EJdx$	$\int XM_xM_x/EJdx$
AB b	0	$-1/2Fb+Fx-1/2qx^2$	0	0	0	0
BA b	0	$1/2qx^2$	0	0		
BC b	0	0	0	0	0	0
CB b	0	0	0	0		
CD √2b	0	0	0	0	0	0
DE b	0	0	0	0	0	0
ED b	0	0	0	0		
EF 2b	0	0	0	0	0	0
FE 2b	0	0	0	0		
GA b	-1+x/b	$-1/2qx^2$	$1/2Fx^2/b-1/2qx^3/b$	$1-2x/b+x^2/b^2$	$1/24Fb^2/EJ$	$1/3Xb/EJ$
AG b	x/b	$1/2Fb-Fx+1/2qx^2$	$1/2Fx-Fx^2/b+1/2qx^3/b$	x^2/b^2		
FH b	0	Fb-2Fx	0	0	0	0
HF b	0	Fb-2Fx	0	0		
HI b	1-x/b	0	0	$1-2x/b+x^2/b^2$	0	$1/3Xb/EJ$
IH b	-x/b	0	0	x^2/b^2		
HG b	-1	-Fb+Fx	Fb-Fx	1	$1/2Fb^2/EJ$	Xb/EJ
GH b	1	Fx	Fx	1		
HG	elongazione asta $N_{1HG}\varepsilon_{HG}L_{HG}$				$-Fb^2/EJ$	
A	molla nodo $-V_{1A}(V_{0A}+XV_{1A})/k_A$				$-1/2Fb^2/EJ$	$1/4Xb/EJ$
	totali				$-23/24Fb^2/EJ$	$23/12Xb/EJ$
	iperstatica $X=W_{GA}$				$1/2Fb$	

Sviluppi di calcolo iperstatica

@ Adolfo Zavelani Rossi, Politecnico di Milano, vers.27.03.13 01.12.25

$L^{XX}_{GA} = \int_o^b (1 - 2\,x/b + x^2/b^2)\ 1/EJ\ dx = [\ x - x^2/b + 1/3\ x^3/b^2\ ]_o^b\ 1/EJ$

$= (\ b - b + 1/3\ b\ )\ 1/EJ\ = 1/3\ b/EJ$

$L^{XX}_{AG} = \int_o^b (\ x^2/b^2\ )\ 1/EJ\ dx = [1/3\ x^3/b^2\ ]_o^b\ 1/EJ$

$= (1/3\ b\ )\ 1/EJ\ = 1/3\ b/EJ$

$L^{XX}_{HI} = \int_o^b (1 - 2\,x/b + x^2/b^2)\ 1/EJ\ dx = [\ x - x^2/b + 1/3\ x^3/b^2\ ]_o^b\ 1/EJ$

$= (\ b - b + 1/3\ b\ )\ 1/EJ\ = 1/3\ b/EJ$

$L^{XX}_{IH} = \int_o^b (\ x^2/b^2\ )\ 1/EJ\ dx = [1/3\ x^3/b^2\ ]_o^b\ 1/EJ$

$= (1/3\ b\ )\ 1/EJ\ = 1/3\ b/EJ$

$L^{XX}_{HG} = \int_o^b (1)\ 1/EJ\ dx = [\ x\ ]_o^b\ 1/EJ$

$= (\ b\ )\ 1/EJ\ =\ b/EJ$

$L^{XX}_{GH} = \int_o^b (1)\ 1/EJ\ dx = [\ x\ ]_o^b\ 1/EJ$

$= (\ b\ )\ 1/EJ\ =\ b/EJ$

$L^{Xo}_{GA} = \int_o^b (1/2\ x^2/b^2 - 1/2\ x^3/b^3)\ Fb\ 1/EJ\ dx = [1/6\ x^3/b^2 - 1/8\ x^4/b^3\ ]_o^b\ Fb\ 1/EJ$

$= (1/6\ b - 1/8\ b\ )\ Fb\ 1/EJ\ = 1/24\ \ Fb^2/EJ$

$L^{Xo}_{AG} = \int_o^b (1/2\ x/b - x^2/b^2 + 1/2\ x^3/b^3)\ Fb\ 1/EJ\ dx = [1/4\ x^2/b - 1/3\ x^3/b^2 + 1/8\ x^4/b^3\ ]_o^b\ Fb\ 1/EJ$

$= (1/4\ b - 1/3\ b + 1/8\ b\ )\ Fb\ 1/EJ\ = 1/24\ \ Fb^2/EJ$

$L^{Xo}_{HG} = \int_o^b (1 - x/b\ )\ Fb\ 1/EJ\ dx - 1\ \ (-1)\ \ (-1)\ \ Fb^2/EJ = [\ x - 1/2\ x^2/b\ ]_o^b\ Fb\ 1/EJ\ - 1\ \ (-1)\ \ (-1)\ \ Fb^2/EJ$

$= (\ b - 1/2\ b\ )\ Fb\ 1/EJ\ - 1\ \ (-1)\ \ (-1)\ \ Fb^2/EJ = -1/2\ \ Fb^2/EJ$

$L^{Xo}_{GH} = \int_o^b (\ x/b\ )\ Fb\ 1/EJ\ dx - 1\ \ (-1)\ \ (-1)\ \ Fb^2/EJ = [1/2\ x^2/b\ ]_o^b\ Fb\ 1/EJ\ - 1\ \ (-1)\ \ (-1)\ \ Fb^2/EJ$

$= (1/2\ b\ )\ Fb\ 1/EJ\ - 1\ \ (-1)\ \ (-1)\ \ Fb^2/EJ = -1/2\ \ Fb^2/EJ$

PROCEDIMENTO E RISULTATI Nome: ESΣ05.xxxx.179

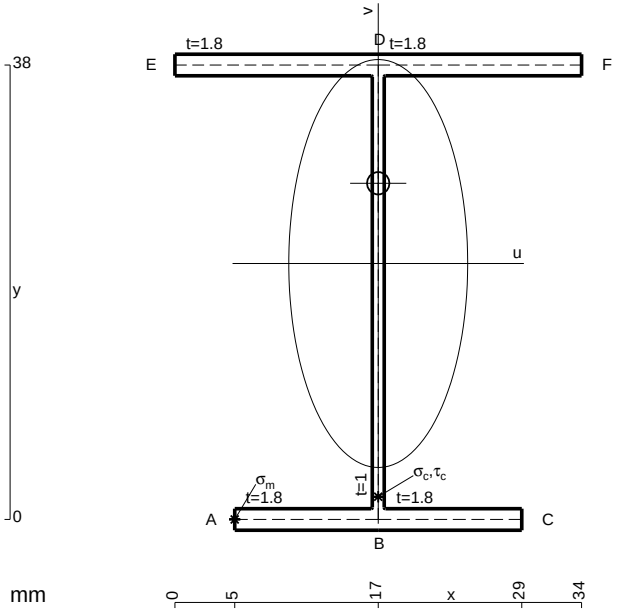

A = 142.4 mm^2
J_u = 41440. mm^4
J_v = 7969. mm^4
J_t = 125.4 mm^4
y_o = 6.711 mm
y_g = 21.4 mm
T_y = -1540. N
M_x = 462000. Nmm
x_m = 5. mm
u_m = -12. mm
v_m = -21.4 mm
$\sigma_m = -Mv/J_u$ = 238.6 N/mm^2
x_c = 17. mm
v_c = -21.4 mm
$\sigma_c = -Mv/J_u$ = 238.6 N/mm^2
$\tau_c = TS^*/tJ_u$ = 34.36 N/mm^2
$\tau_g = TS^*/tJ_u$ = 34.36 N/mm^2
t_c = 770. mm
$\sigma_o = \sqrt{\sigma^2 + 3\tau^2}$ = 245.9 N/mm^2

@ Adolfo Zavelani Rossi, Politecnico di Milano, vers.27.03.13 01.12.25

ESΣ05.xxxx.179

@ Adolfo Zavelani Rossi, Politecnico di Milano, vers.27.03.13 01.12.25

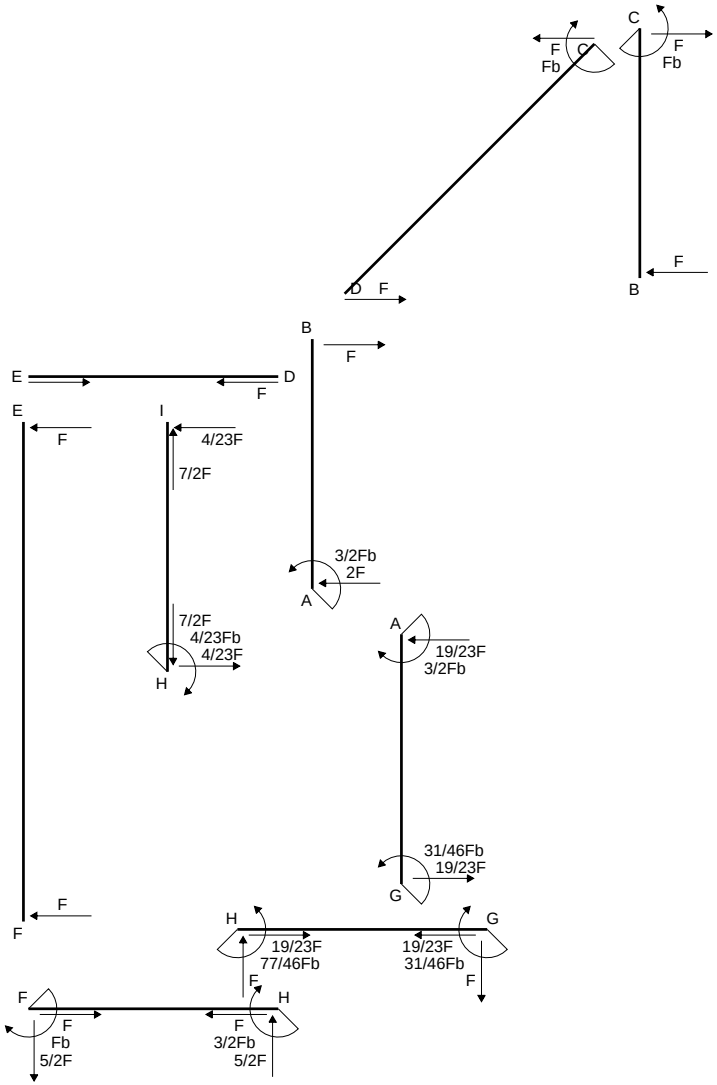
C
F
Fb
C
F
Fb
F
D
F
B
B
F
E
D
F
E
F
I
4/23F
7/2F
3/2Fb
2F
A
7/2F
4/23Fb
4/23F
H
A
19/23F
3/2Fb
31/46Fb
19/23F
G
F
F
H
G
19/23F
77/46Fb
19/23F
31/46Fb
F
F
H
F
Fb
5/2F
F
3/2Fb
5/2F

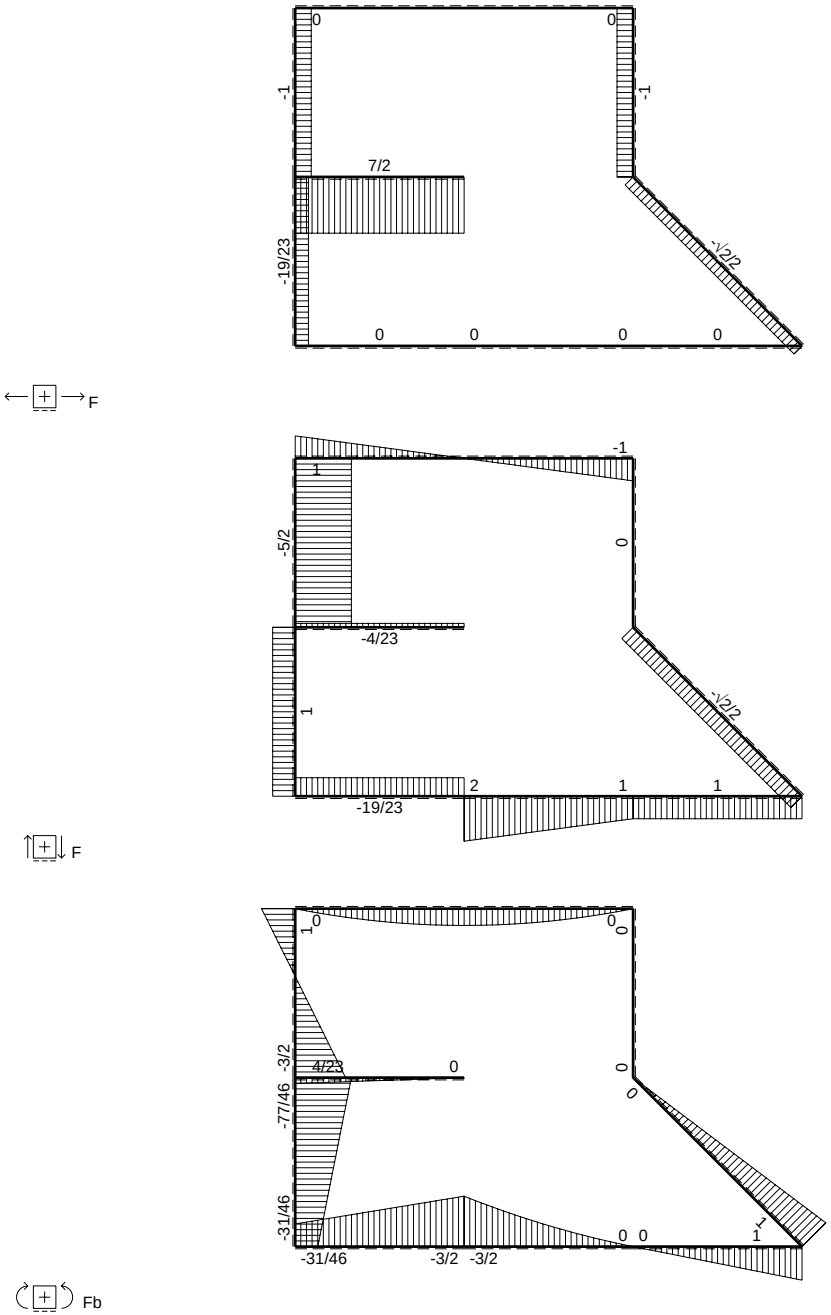
F
0
0
-1
-1
7/2
-19/23
-1/2/2
0
0
0
0
F
-1
1
-5/2
0
-4/23
1
-1/2/2
2
1
1
-19/23
F
1
0
0
-3/2
4/23
0
0
0
-77/46
-31/46
0 0
1
-31/46
-3/2 -3/2
Fb

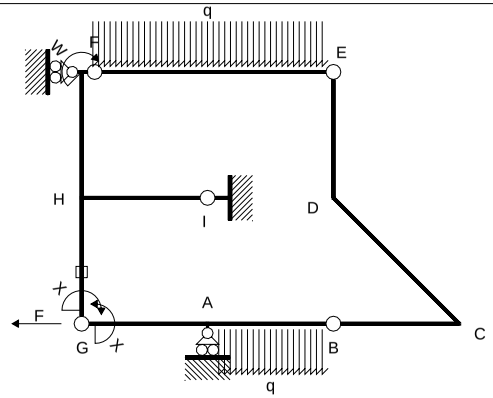

Schema di calcolo iperstatico

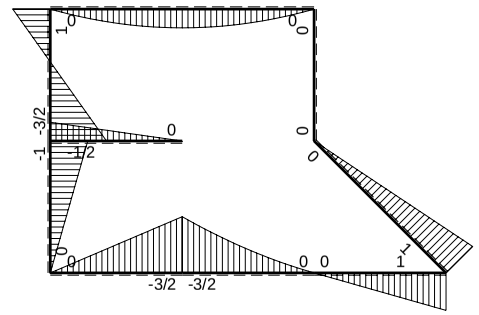

M_0 flessione da carichi assegnati

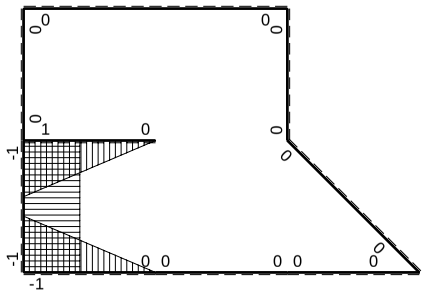

M_x flessione da iperstatica X=1

Quadro contributi PLV per iperstatica $X=W_{GA}$

→	$M_x(x)$	$M_0(x)$	M_xM_0	M_xM_x	$\int M_xM_0/EJdx$	$\int XM_xM_x/EJdx$
AB b	0	$-3/2Fb+2Fx-1/2qx^2$	0	0	0	0
BA b	0	$Fx+1/2qx^2$	0	0		
BC b	0	Fx	0	0	0	0
CB b	0	-Fb+Fx	0	0		
CD $\sqrt{2}$b	0	$Fb-\sqrt{2}/2Fx$	0	0	0	0
DE b	0	0	0	0	0	0
ED b	0	0	0	0		
EF 2b	0	$-Fx+1/2qx^2$	0	0	0	0
FE 2b	0	$Fx-1/2qx^2$	0	0		
GA b	-1+x/b	-3/2Fx	$3/2Fx-3/2Fx^2/b$	$1-2x/b+x^2/b^2$	$1/4Fb^2/EJ$	1/3Xb/EJ
AG b	x/b	3/2Fb-3/2Fx	$3/2Fx-3/2Fx^2/b$	x^2/b^2		
FH b	0	Fb-5/2Fx	0	0	0	0
HF b	0	3/2Fb-5/2Fx	0	0		
HI b	1-x/b	-1/2Fb+1/2Fx	$-1/2Fb+Fx-1/2Fx^2/b$	$1-2x/b+x^2/b^2$	$-1/6Fb^2/EJ$	1/3Xb/EJ
IH b	-x/b	1/2Fx	$-1/2Fx^2/b$	x^2/b^2		
HG b	-1	-Fb+Fx	Fb-Fx	1	$1/2Fb^2/EJ$	Xb/EJ
GH b	1	Fx	Fx	1		
HG	elongazione asta $N_{1HG}\varepsilon_{HG}L_{HG}$				$-Fb^2/EJ$	
A	molla nodo $-V_{1A}(V_{0A}+XV_{1A})/k_A$				$-7/8Fb^2/EJ$	1/4Xb/EJ
	totali				$-31/24Fb^2/EJ$	23/12Xb/EJ
	iperstatica $X=W_{GA}$				31/46Fb	

Sviluppi di calcolo iperstatica

$L^{XX}_{GA} = \int_o^b (1 - 2\,x/b + x^2/b^2)\ 1/EJ\ dx = [\,x - x^2/b + 1/3\,x^3/b^2\,]_o^b\ 1/EJ$

$= (\,b - b + 1/3\,b\,)\ 1/EJ = 1/3\ b/EJ$

$L^{XX}_{AG} = \int_o^b (\,x^2/b^2\,)\ 1/EJ\ dx = [1/3\,x^3/b^2\,]_o^b\ 1/EJ$

$= (1/3\,b)\ 1/EJ = 1/3\ b/EJ$

$L^{XX}_{HI} = \int_o^b (1 - 2\,x/b + x^2/b^2)\ 1/EJ\ dx = [\,x - x^2/b + 1/3\,x^3/b^2\,]_o^b\ 1/EJ$

$= (\,b - b + 1/3\,b\,)\ 1/EJ = 1/3\ b/EJ$

$L^{XX}_{IH} = \int_o^b (\,x^2/b^2\,)\ 1/EJ\ dx = [1/3\,x^3/b^2\,]_o^b\ 1/EJ$

$= (1/3\,b)\ 1/EJ = 1/3\ b/EJ$

$L^{XX}_{HG} = \int_o^b (1)\ 1/EJ\ dx = [\,x\,]_o^b\ 1/EJ$

$= (\,b\,)\ 1/EJ = b/EJ$

$L^{XX}_{GH} = \int_o^b (1)\ 1/EJ\ dx = [\,x\,]_o^b\ 1/EJ$

$= (\,b\,)\ 1/EJ = b/EJ$

$L^{Xo}_{GA} = \int_o^b (3/2\,x/b - 3/2\,x^2/b^2)\ Fb\ 1/EJ\ dx = [3/4\,x^2/b - 1/2\,x^3/b^2\,]_o^b\ Fb\ 1/EJ$

$= (3/4\,b - 1/2\,b\,)\ Fb\ 1/EJ = 1/4\ Fb^2/EJ$

$L^{Xo}_{AG} = \int_o^b (3/2\,x/b - 3/2\,x^2/b^2\,)\ Fb\ 1/EJ\ dx = [3/4\,x^2/b - 1/2\,x^3/b^2\,]_o^b\ Fb\ 1/EJ$

$= (3/4\,b - 1/2\,b\,)\ Fb\ 1/EJ = 1/4\ Fb^2/EJ$

$L^{Xo}_{HI} = \int_o^b (-1/2 + x/b - 1/2\,x^2/b^2\,)\ Fb\ 1/EJ\ dx = [-1/2\,x + 1/2\,x^2/b - 1/6\,x^3/b^2\,]_o^b\ Fb\ 1/EJ$

$= (-1/2\,b + 1/2\,b - 1/6\,b\,)\ Fb\ 1/EJ = -1/6\ Fb^2/EJ$

$L^{Xo}_{IH} = \int_o^b (-1/2\,x^2/b^2\,)\ Fb\ 1/EJ\ dx = [-1/6\,x^3/b^2\,]_o^b\ Fb\ 1/EJ$

$= (-1/6\,b\,)\ Fb\ 1/EJ = -1/6\ Fb^2/EJ$

$L^{Xo}_{HG} = \int_o^b (1 - x/b\,)\ Fb\ 1/EJ\ dx - 1\ \ (-1)\ \ (-1)\ Fb^2/EJ = [\,x - 1/2\,x^2/b\,]_o^b\ Fb\ 1/EJ\ -\ 1\ \ (-1)\ \ (-1)\ Fb^2/EJ$

$= (\,b - 1/2\,b\,)\ Fb\ 1/EJ\ -\ 1\ \ (-1)\ \ (-1)\ Fb^2/EJ = -1/2\ Fb^2/EJ$

$L^{Xo}_{GH} = \int_o^b (\,x/b\,)\ Fb\ 1/EJ\ dx - 1\ \ (-1)\ \ (-1)\ Fb^2/EJ = [1/2\,x^2/b\,]_o^b\ Fb\ 1/EJ\ -\ 1\ \ (-1)\ \ (-1)\ Fb^2/EJ$

$= (1/2\,b\,)\ Fb\ 1/EJ\ -\ 1\ \ (-1)\ \ (-1)\ Fb^2/EJ = -1/2\ Fb^2/EJ$

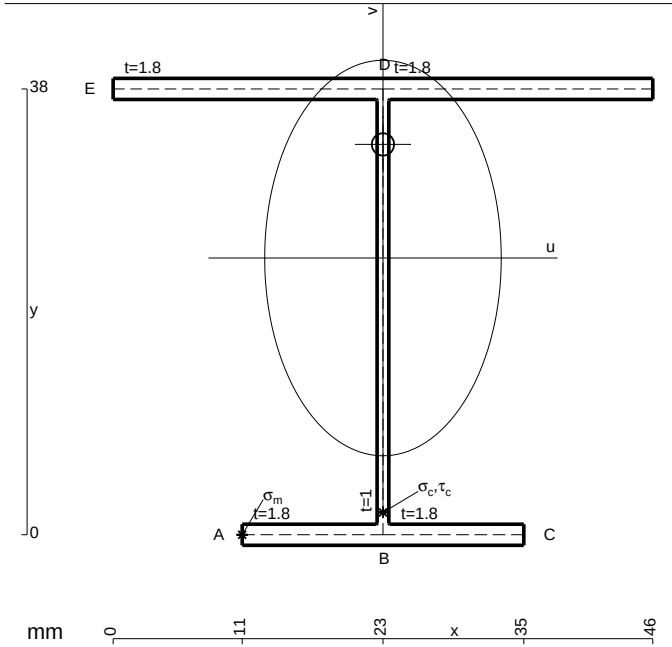

A = 164. mm^2
J_u = 46607. mm^4
J_v = 16674. mm^4
J_t = 148.7 mm^4
y_o = 9.686 mm
y_g = 23.59 mm
N = -800. N
T_y = -2000. N
M_x = -384000. Nmm
x_m = 11. mm
u_m = -12. mm
v_m = -23.59 mm
$\sigma_m = N/A - Mv/J_u$ = -199.2 N/mm^2
x_c = 23. mm
v_c = -23.59 mm
$\sigma_c = N/A - Mv/J_u$ = -199.2 N/mm^2
$\tau_c = TS^*/tJ_u$ = 43.73 N/mm^2
$\tau_g = TS^*/tJ_u$ = 43.73 N/mm^2
t_c = 800. mm
$\sigma_o = \sqrt{\sigma^2 + 3\tau^2}$ = 213.1 N/mm^2

ESΣ05.xxxx.180

@ Adolfo Zavelani Rossi, Politecnico di Milano, vers.27.03.13 01.12.25

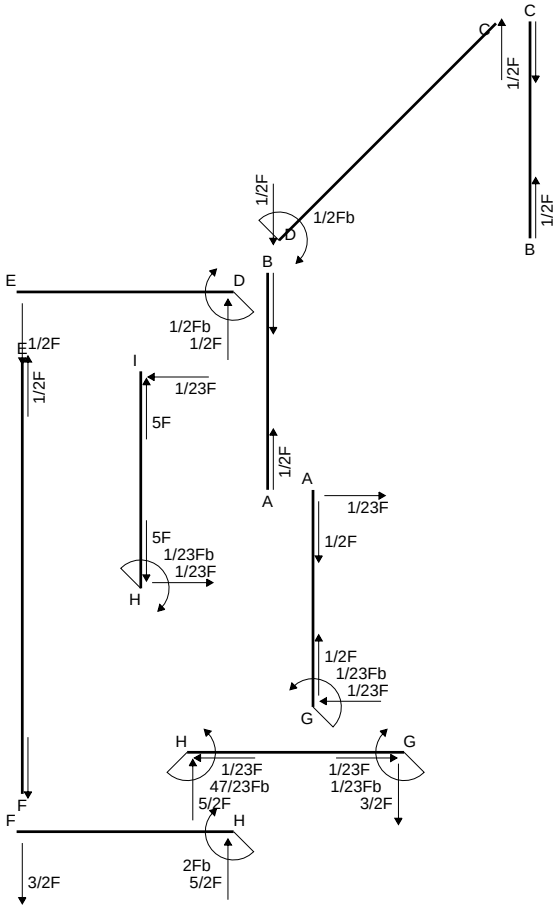
C
C
1/2F
1/2F
1/2Fb
D
B
B
E
D
1/2Fb
1/2F
E
1/2F
1/2F
I
1/23F
5F
1/2F
A
A
1/23F
1/2F
5F
1/23Fb
1/23F
H
1/2F
1/23Fb
1/23F
G
H
G
1/23F
47/23Fb
5/2F
1/23F
1/23Fb
3/2F
F
H
F
2Fb
5/2F
3/2F

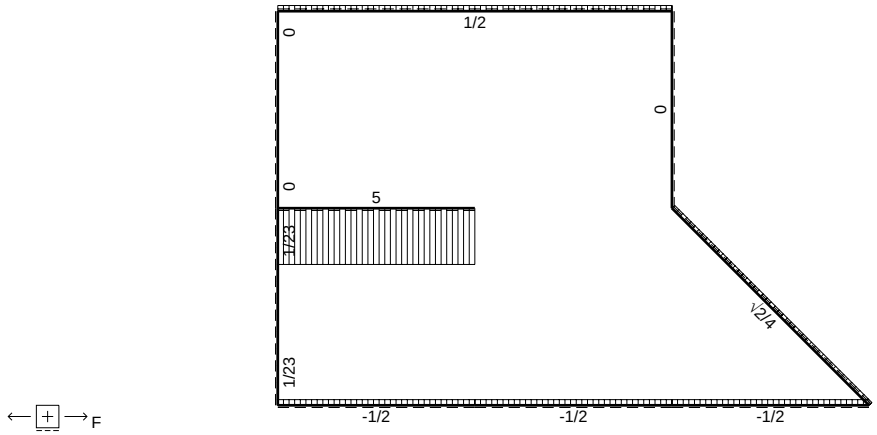
F
1/2
0
0
0
5
1/23
√2/4
1/23
-1/2
-1/2
-1/2

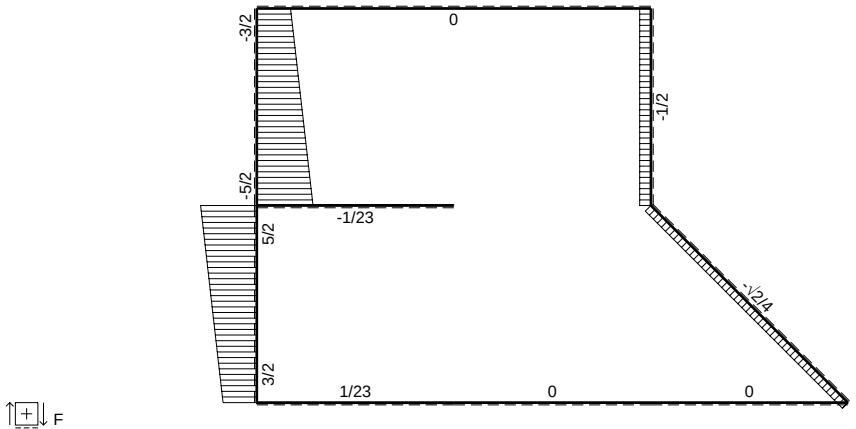
F
-3/2
0
-1/2
-5/2
-1/23
5/2
-√2/4
3/2
1/23
0
0

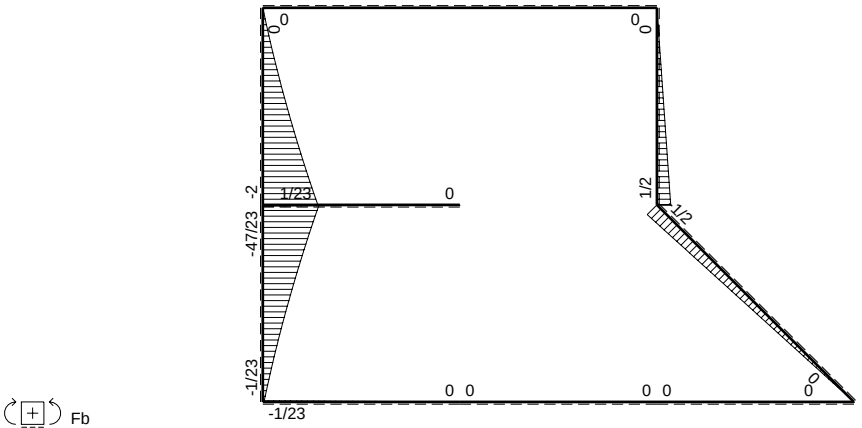
Fb
0
0
0
-2
1/23
0
1/2
1/2
-47/23
-1/23
0 0
0 0
0
-1/23

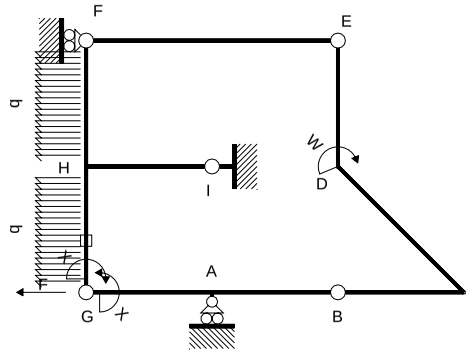

Schema di calcolo iperstatico

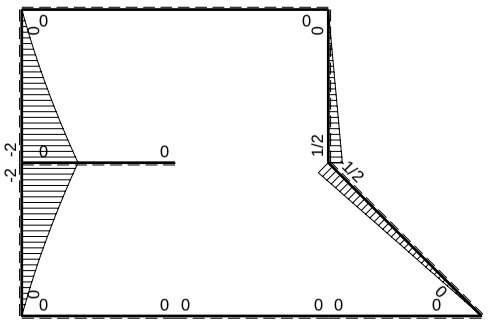

M_0 flessione da carichi assegnati

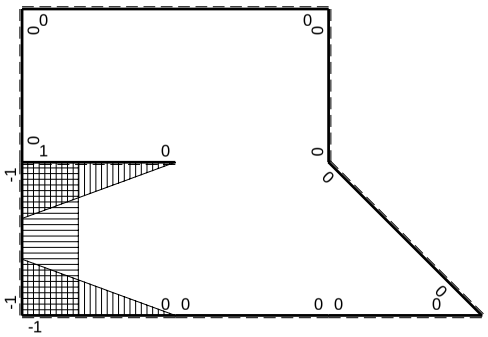

M_x flessione da iperstatica X=1

Quadro contributi PLV per iperstatica $X=W_{GA}$

→	$M_x(x)$	$M_0(x)$	M_xM_0	M_xM_x	$\int M_xM_0/EJdx$	$\int XM_xM_x/EJdx$
AB b	0	0	0	0	0	0
BA b	0	0	0	0		
BC b	0	0	0	0	0	0
CB b	0	0	0	0		
CD $\sqrt{2}$b	0	$-\sqrt{2}/4Fx$	0	0	0	0
DE b	0	1/2Fb-1/2Fx	0	0	0	0
ED b	0	-1/2Fx	0	0		
EF 2b	0	0	0	0	0	0
FE 2b	0	0	0	0		
GA b	-1+x/b	0	0	$1-2x/b+x^2/b^2$	0	1/3Xb/EJ
AG b	x/b	0	0	x^2/b^2		
FH b	0	$-3/2Fx-1/2qx^2$	0	0	0	0
HF b	0	$2Fb-5/2Fx+1/2qx^2$	0	0		
HI b	1-x/b	0	0	$1-2x/b+x^2/b^2$	0	1/3Xb/EJ
IH b	-x/b	0	0	x^2/b^2		
HG b	-1	$-2Fb+5/2Fx-1/2qx^2$	$2Fb-5/2Fx+1/2Fx^2/b$	1	$11/12Fb^2/EJ$	Xb/EJ
GH b	1	$3/2Fx+1/2qx^2$	$3/2Fx+1/2Fx^2/b$	1		
HG	elongazione asta $N_{1HG}\varepsilon_{HG}L_{HG}$				$-Fb^2/EJ$	
A	molla nodo $-V_{1A}(V_{0A}+XV_{1A})/k_A$					1/4Xb/EJ
	totali				$-1/12Fb^2/EJ$	23/12Xb/EJ
	iperstatica $X=W_{GA}$				1/23Fb	

Sviluppi di calcolo iperstatica

$L^{XX}_{GA} = \int_o^b (1 - 2\,x/b + x^2/b^2)\ 1/EJ\ dx = [\ x - x^2/b + 1/3\ x^3/b^2\ ]_o^b\ 1/EJ$

$= (\ b - b + 1/3\ b\ )\ 1/EJ\ = 1/3\ b/EJ$

$L^{XX}_{AG} = \int_o^b (\ x^2/b^2\ )\ 1/EJ\ dx = [1/3\ x^3/b^2\ ]_o^b\ 1/EJ$

$= (1/3\ b\ )\ 1/EJ\ = 1/3\ b/EJ$

$L^{XX}_{HI} = \int_o^b (1 - 2\,x/b + x^2/b^2)\ 1/EJ\ dx = [\ x - x^2/b + 1/3\ x^3/b^2\ ]_o^b\ 1/EJ$

$= (\ b - b + 1/3\ b\ )\ 1/EJ\ = 1/3\ b/EJ$

$L^{XX}_{IH} = \int_o^b (\ x^2/b^2\ )\ 1/EJ\ dx = [1/3\ x^3/b^2\ ]_o^b\ 1/EJ$

$= (1/3\ b\ )\ 1/EJ\ = 1/3\ b/EJ$

$L^{XX}_{HG} = \int_o^b (1\ )\ 1/EJ\ dx = [\ x\ ]_o^b\ 1/EJ$

$= (\ b\ )\ 1/EJ\ =\ b/EJ$

$L^{XX}_{GH} = \int_o^b (1\ )\ 1/EJ\ dx = [\ x\ ]_o^b\ 1/EJ$

$= (\ b\ )\ 1/EJ\ =\ b/EJ$

$L^{Xo}_{HG} = \int_o^b (2 - 5/2\ x/b + 1/2\ x^2/b^2\ )\ Fb\ 1/EJ\ dx - 1\ \ (-1)\ \ (-1)\ \ Fb^2/EJ$

$= [2\ x - 5/4\ x^2/b + 1/6\ x^3/b^2\ ]_o^b\ Fb\ 1/EJ\ - 1\ \ (-1)\ \ (-1)\ \ Fb^2/EJ$

$= (2\ b - 5/4\ b + 1/6\ b\ )\ Fb\ 1/EJ\ - 1\ \ (-1)\ \ (-1)\ \ Fb^2/EJ = -1/12\ \ Fb^2/EJ$

$L^{Xo}_{GH} = \int_o^b (3/2\ x/b + 1/2\ x^2/b^2\ )\ Fb\ 1/EJ\ dx - 1\ \ (-1)\ \ (-1)\ \ Fb^2/EJ$

$= [3/4\ x^2/b + 1/6\ x^3/b^2\ ]_o^b\ Fb\ 1/EJ\ - 1\ \ (-1)\ \ (-1)\ \ Fb^2/EJ$

$= (3/4\ b + 1/6\ b\ )\ Fb\ 1/EJ\ - 1\ \ (-1)\ \ (-1)\ \ Fb^2/EJ = -1/12\ \ Fb^2/EJ$

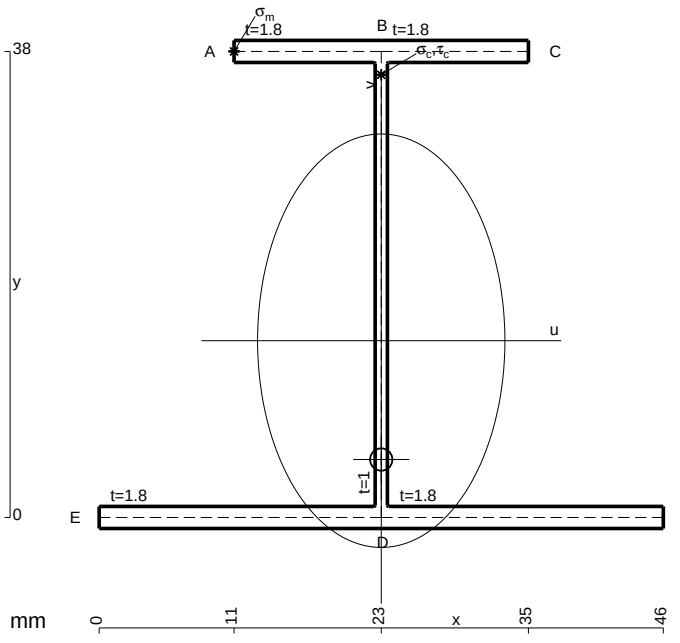

A = 164. mm^2
J_u = 46607. mm^4
J_v = 16674. mm^4
J_t = 148.7 mm^4
y_o = -9.686 mm
y_g = 14.41 mm
T_y = -1475. N
M_x = -413000. Nmm
x_m = 11. mm
y_m = 38. mm
u_m = -12. mm
v_m = 23.59 mm
$\sigma_m = -Mv/J_u$ = 209. N/mm^2
x_c = 23. mm
y_c = 38. mm
v_c = 23.59 mm
$\sigma_c = -Mv/J_u$ = 209. N/mm^2
$\tau_c = TS^*/tJ_u$ = 32.25 N/mm^2
$\tau_g = TS^*/tJ_u$ = 32.25 N/mm^2
t_c = 590. mm
$\sigma_o = \sqrt{\sigma^2 + 3\tau^2}$ = 216.4 N/mm^2

ESΣ05.xxxx.181

@ Adolfo Zavelani Rossi, Politecnico di Milano, vers.27.03.13 01.12.25

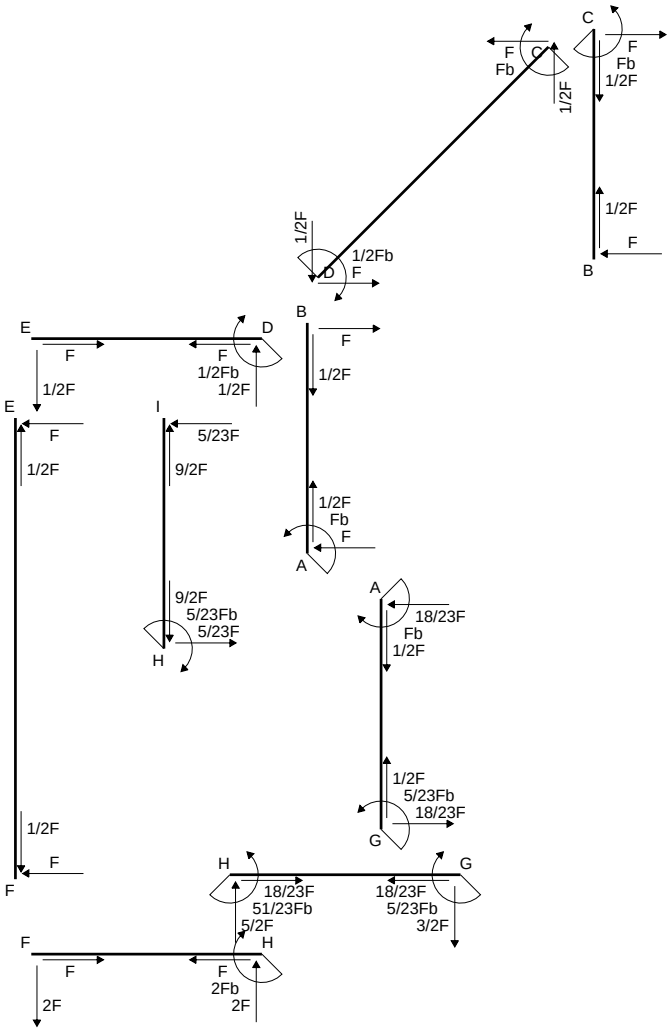
C
F
Fb
C
1/2F
F
Fb
1/2F
1/2F
1/2F
F
B
1/2F
1/2Fb
D
F
E
D
F
F
1/2Fb
1/2F
B
F
1/2F
E
F
1/2F
I
5/23F
9/2F
1/2F
Fb
F
A
9/2F
5/23Fb
5/23F
H
A
18/23F
Fb
1/2F
1/2F
5/23Fb
18/23F
G
1/2F
F
F
H
18/23F
51/23Fb
5/2F
H
G
18/23F
5/23Fb
3/2F
F
F
F
2Fb
2F
2F

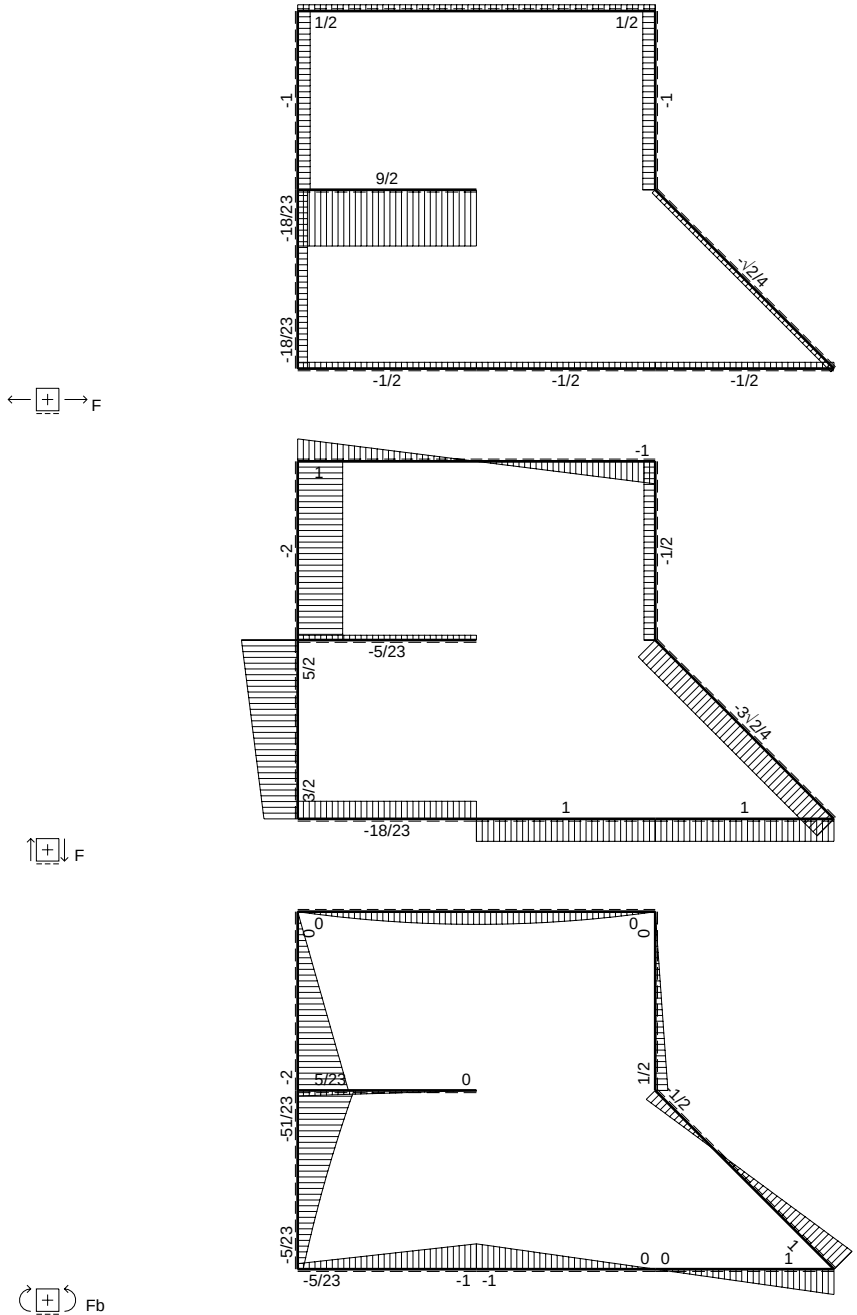
F
1/2
1/2
-1
-1
9/2
-18/23
-1/2
-18/23
-1/2
-1/2
-1/2
F
-1
1
-2
-1/2
-5/23
5/2
-3/2
3/2
1
1
-18/23
F
0
0
0
0
-2
5/23
0
1/2
1/2
-51/23
-5/23
0 0
1
1
-5/23
-1 -1
Fb

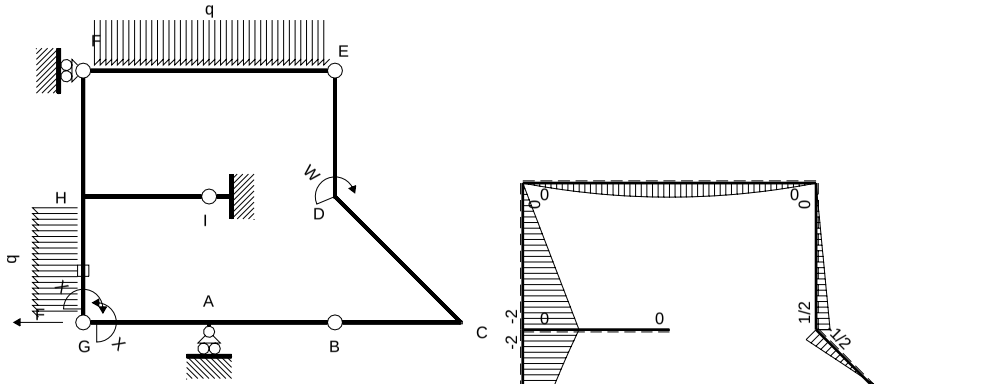

M_0 flessione da carichi assegnati

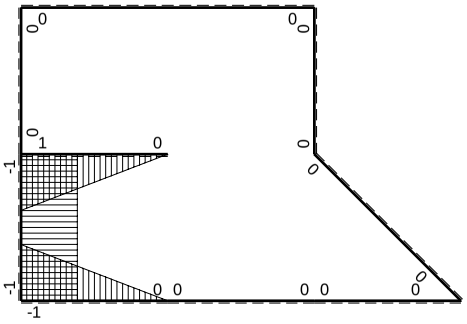

M_x flessione da iperstatica X=1

Quadro contributi PLV per iperstatica $X=W_{GA}$

→	$M_x(x)$	$M_0(x)$	M_xM_0	M_xM_x	$\int M_xM_0/EJdx$	$\int XM_xM_x/EJdx$
AB b	0	-Fb+Fx	0	0	0	0
BA b	0	Fx	0	0		
BC b	0	Fx	0	0	0	0
CB b	0	-Fb+Fx	0	0		
CD √2b	0	Fb-3√2/4Fx	0	0	0	0
DE b	0	1/2Fb-1/2Fx	0	0	0	0
ED b	0	-1/2Fx	0	0		
EF 2b	0	$-Fx+1/2qx^2$	0	0	0	0
FE 2b	0	$Fx-1/2qx^2$	0	0		
GA b	-1+x/b	-Fx	$Fx-Fx^2/b$	$1-2x/b+x^2/b^2$	$1/6Fb^2/EJ$	1/3Xb/EJ
AG b	x/b	Fb-Fx	$Fx-Fx^2/b$	x^2/b^2		
FH b	0	-2Fx	0	0	0	0
HF b	0	2Fb-2Fx	0	0		
HI b	1-x/b	0	0	$1-2x/b+x^2/b^2$	0	1/3Xb/EJ
IH b	-x/b	0	0	x^2/b^2		
HG b	-1	$-2Fb+5/2Fx-1/2qx^2$	$2Fb-5/2Fx+1/2Fx^2/b$	1	$11/12Fb^2/EJ$	Xb/EJ
GH b	1	$3/2Fx+1/2qx^2$	$3/2Fx+1/2Fx^2/b$	1		
HG	elongazione asta $N_{1HG}\varepsilon_{HG}L_{HG}$				$-Fb^2/EJ$	
A	molla nodo $-V_{1A}(V_{0A}+XV_{1A})/k_A$				$-1/2Fb^2/EJ$	1/4Xb/EJ
	totali				$-5/12Fb^2/EJ$	23/12Xb/EJ
	iperstatica $X=W_{GA}$				5/23Fb	

Sviluppi di calcolo iperstatica

$L^{XX}_{GA} = \int_o^b (1 - 2\,x/b + x^2/b^2)\ 1/EJ\ dx = [\,x - x^2/b + 1/3\,x^3/b^2\,]_o^b\ 1/EJ$

$= (\,b - b + 1/3\,b\,)\ 1/EJ = 1/3\ b/EJ$

$L^{XX}_{AG} = \int_o^b (\,x^2/b^2\,)\ 1/EJ\ dx = [1/3\,x^3/b^2\,]_o^b\ 1/EJ$

$= (1/3\,b\,)\ 1/EJ = 1/3\ b/EJ$

$L^{XX}_{HI} = \int_o^b (1 - 2\,x/b + x^2/b^2)\ 1/EJ\ dx = [\,x - x^2/b + 1/3\,x^3/b^2\,]_o^b\ 1/EJ$

$= (\,b - b + 1/3\,b\,)\ 1/EJ = 1/3\ b/EJ$

$L^{XX}_{IH} = \int_o^b (\,x^2/b^2\,)\ 1/EJ\ dx = [1/3\,x^3/b^2\,]_o^b\ 1/EJ$

$= (1/3\,b\,)\ 1/EJ = 1/3\ b/EJ$

$L^{XX}_{HG} = \int_o^b (1)\ 1/EJ\ dx = [\,x\,]_o^b\ 1/EJ$

$= (\,b\,)\ 1/EJ = b/EJ$

$L^{XX}_{GH} = \int_o^b (1)\ 1/EJ\ dx = [\,x\,]_o^b\ 1/EJ$

$= (\,b\,)\ 1/EJ = b/EJ$

$L^{Xo}_{GA} = \int_o^b (\,x/b - x^2/b^2\,)\ Fb\ 1/EJ\ dx = [1/2\,x^2/b - 1/3\,x^3/b^2\,]_o^b\ Fb\ 1/EJ$

$= (1/2\,b - 1/3\,b\,)\ Fb\ 1/EJ = 1/6\ Fb^2/EJ$

$L^{Xo}_{AG} = \int_o^b (\,x/b - x^2/b^2\,)\ Fb\ 1/EJ\ dx = [1/2\,x^2/b - 1/3\,x^3/b^2\,]_o^b\ Fb\ 1/EJ$

$= (1/2\,b - 1/3\,b\,)\ Fb\ 1/EJ = 1/6\ Fb^2/EJ$

$L^{Xo}_{HG} = \int_o^b (2 - 5/2\,x/b + 1/2\,x^2/b^2\,)\ Fb\ 1/EJ\ dx - 1\ \ (-1)\ \ (-1)\ \ Fb^2/EJ$

$= [\,2\,x - 5/4\,x^2/b + 1/6\,x^3/b^2\,]_o^b\ Fb\ 1/EJ\ - 1\ \ (-1)\ \ (-1)\ \ Fb^2/EJ$

$= (\,2\,b - 5/4\,b + 1/6\,b\,)\ Fb\ 1/EJ\ - 1\ \ (-1)\ \ (-1)\ \ Fb^2/EJ = -1/12\ \ Fb^2/EJ$

$L^{Xo}_{GH} = \int_o^b (3/2\,x/b + 1/2\,x^2/b^2\,)\ Fb\ 1/EJ\ dx - 1\ \ (-1)\ \ (-1)\ \ Fb^2/EJ$

$= [\,3/4\,x^2/b + 1/6\,x^3/b^2\,]_o^b\ Fb\ 1/EJ\ - 1\ \ (-1)\ \ (-1)\ \ Fb^2/EJ$

$= (\,3/4\,b + 1/6\,b\,)\ Fb\ 1/EJ\ - 1\ \ (-1)\ \ (-1)\ \ Fb^2/EJ = -1/12\ \ Fb^2/EJ$

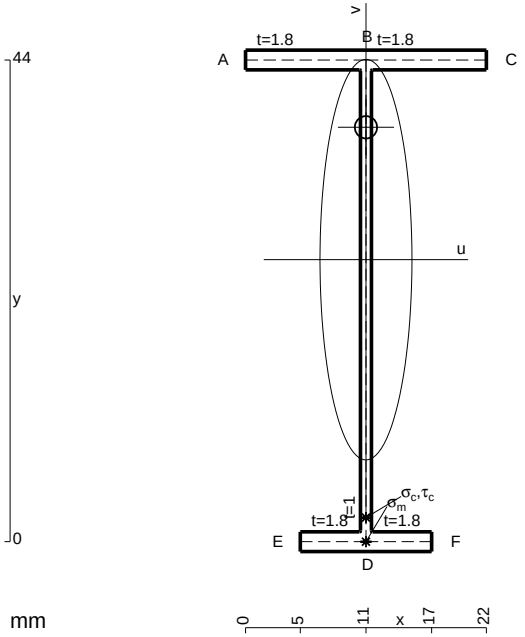

A = 105.2 mm^2
J_u = 35229. mm^4
J_v = 1856. mm^4
J_t = 80.76 mm^4
y_o = 12.09 mm
y_g = 25.76 mm
N = -320. N
T_y = -640. N
M_x = -288000. Nmm
x_m = 11. mm
v_m = -25.76 mm
$\sigma_m = N/A - Mv/J_u$ = -213.7 N/mm^2
y_c = 3. mm
u_c = -11. mm
v_c = -22.76 mm
$\sigma_c = N/A - Mv/J_u$ = -213.7 N/mm^2
$\tau_c = TS^*/tJ_u$ = 10.11 N/mm^2
$\tau_g = TS^*/tJ_u$ = 10.11 N/mm^2
t_c = 320. mm
$\sigma_o = \sqrt{\sigma^2 + 3\tau^2}$ = 214.4 N/mm^2

ESΣ05.xxxx.182

@ Adolfo Zavelani Rossi, Politecnico di Milano, vers.27.03.13 01.12.25

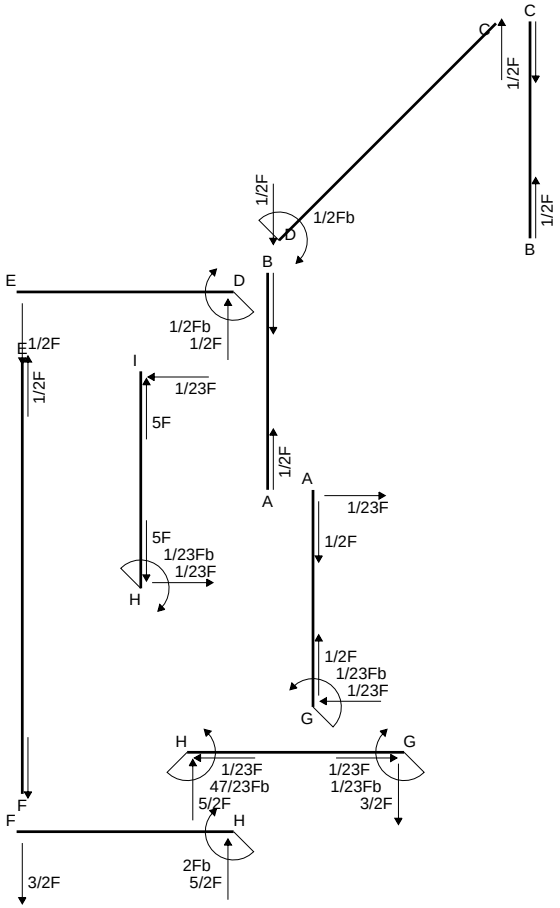
C
C
1/2F
1/2F
1/2Fb
D
B
B
E
D
1/2Fb
1/2F
E
1/2F
1/2F
I
1/23F
5F
1/2F
A
A
1/23F
1/2F
5F
1/23Fb
1/23F
H
1/2F
1/23Fb
1/23F
G
H
G
1/23F
47/23Fb
5/2F
1/23F
1/23Fb
3/2F
F
H
F
2Fb
5/2F
3/2F

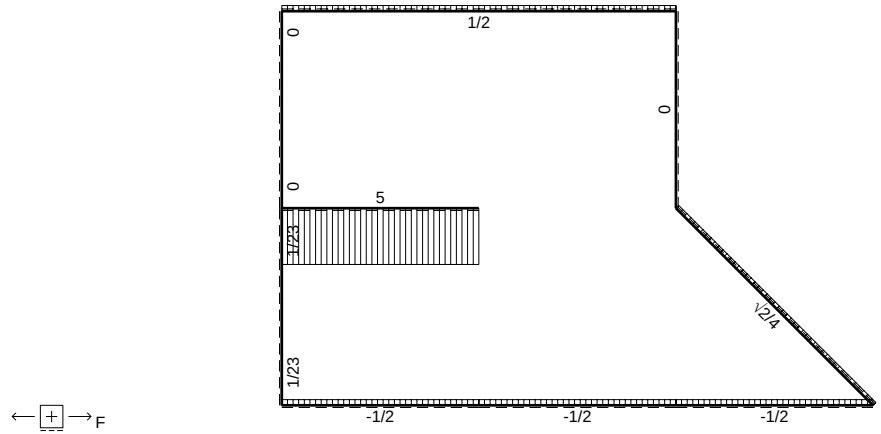
F
1/2
0
0
0
5
1/23
√2/4
1/23
-1/2
-1/2
-1/2

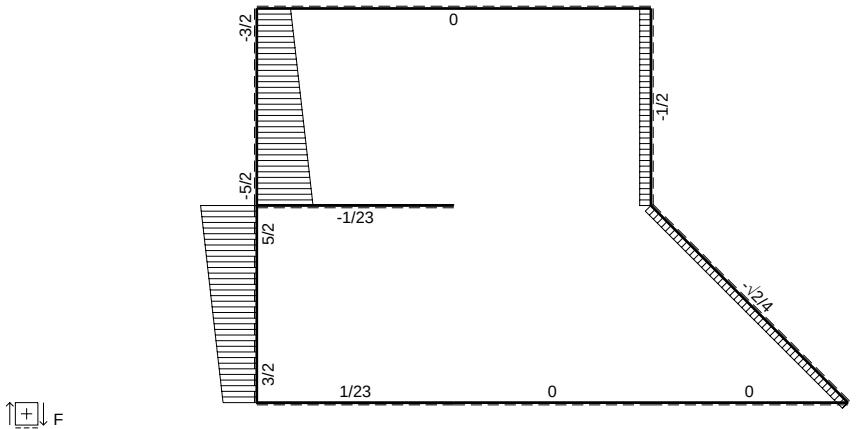
F
-3/2
0
-1/2
-5/2
-1/23
5/2
-√2/4
3/2
1/23
0
0

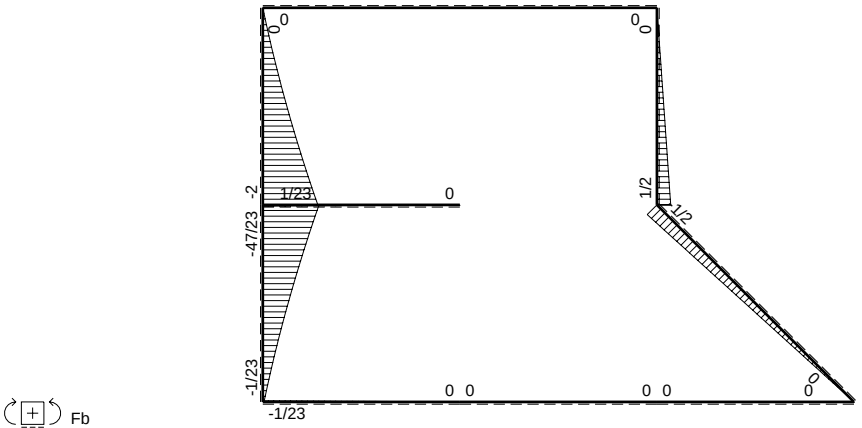
Fb
0
0
0
1/23
0
1/2
1/2
-2
-47/23
-1/23
0 0
0 0
0
-1/23

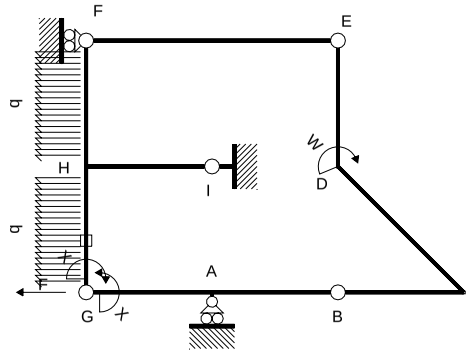

Schema di calcolo iperstatico

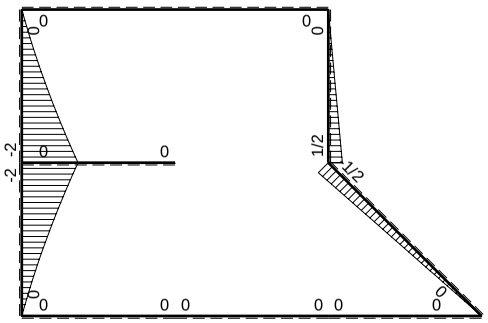

M_0 flessione da carichi assegnati

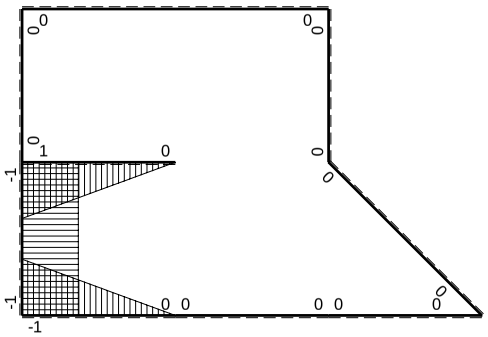

M_x flessione da iperstatica X=1

Quadro contributi PLV per iperstatica $X=W_{GA}$

→	$M_x(x)$	$M_0(x)$	M_xM_0	M_xM_x	$\int M_xM_0/EJdx$	$\int XM_xM_x/EJdx$
AB b	0	0	0	0	0	0
BA b	0	0	0	0		
BC b	0	0	0	0	0	0
CB b	0	0	0	0		
CD $\sqrt{2}$b	0	$-\sqrt{2}/4Fx$	0	0	0	0
DE b	0	1/2Fb-1/2Fx	0	0	0	0
ED b	0	-1/2Fx	0	0		
EF 2b	0	0	0	0	0	0
FE 2b	0	0	0	0		
GA b	-1+x/b	0	0	$1-2x/b+x^2/b^2$	0	1/3Xb/EJ
AG b	x/b	0	0	x^2/b^2		
FH b	0	$-3/2Fx-1/2qx^2$	0	0	0	0
HF b	0	$2Fb-5/2Fx+1/2qx^2$	0	0		
HI b	1-x/b	0	0	$1-2x/b+x^2/b^2$	0	1/3Xb/EJ
IH b	-x/b	0	0	x^2/b^2		
HG b	-1	$-2Fb+5/2Fx-1/2qx^2$	$2Fb-5/2Fx+1/2Fx^2/b$	1	$11/12Fb^2/EJ$	Xb/EJ
GH b	1	$3/2Fx+1/2qx^2$	$3/2Fx+1/2Fx^2/b$	1		
HG	elongazione asta $N_{1HG}\varepsilon_{HG}L_{HG}$				$-Fb^2/EJ$	
A	molla nodo $-V_{1A}(V_{0A}+XV_{1A})/k_A$					1/4Xb/EJ
	totali				$-1/12Fb^2/EJ$	23/12Xb/EJ
	iperstatica $X=W_{GA}$				1/23Fb	

Sviluppi di calcolo iperstatica

$L^{XX}_{GA} = \int_o^b (1 - 2\,x/b + x^2/b^2)\ 1/EJ\ dx = [\ x - x^2/b + 1/3\ x^3/b^2\ ]_o^b\ 1/EJ$

$= (\ b - b + 1/3\ b\ )\ 1/EJ\ = 1/3\ b/EJ$

$L^{XX}_{AG} = \int_o^b (\ x^2/b^2\ )\ 1/EJ\ dx = [1/3\ x^3/b^2\ ]_o^b\ 1/EJ$

$= (1/3\ b\ )\ 1/EJ\ = 1/3\ b/EJ$

$L^{XX}_{HI} = \int_o^b (1 - 2\,x/b + x^2/b^2)\ 1/EJ\ dx = [\ x - x^2/b + 1/3\ x^3/b^2\ ]_o^b\ 1/EJ$

$= (\ b - b + 1/3\ b\ )\ 1/EJ\ = 1/3\ b/EJ$

$L^{XX}_{IH} = \int_o^b (\ x^2/b^2\ )\ 1/EJ\ dx = [1/3\ x^3/b^2\ ]_o^b\ 1/EJ$

$= (1/3\ b\ )\ 1/EJ\ = 1/3\ b/EJ$

$L^{XX}_{HG} = \int_o^b (1)\ 1/EJ\ dx = [\ x\ ]_o^b\ 1/EJ$

$= (\ b\ )\ 1/EJ\ =\ b/EJ$

$L^{XX}_{GH} = \int_o^b (1)\ 1/EJ\ dx = [\ x\ ]_o^b\ 1/EJ$

$= (\ b\ )\ 1/EJ\ =\ b/EJ$

$L^{Xo}_{HG} = \int_o^b (2 - 5/2\ x/b + 1/2\ x^2/b^2)\ Fb\ 1/EJ\ dx - 1\ \ (-1)\ \ (-1)\ \ Fb^2/EJ$

$= [2\,x - 5/4\ x^2/b + 1/6\ x^3/b^2\ ]_o^b\ Fb\ 1/EJ\ - 1\ \ (-1)\ \ (-1)\ \ Fb^2/EJ$

$= (2\,b - 5/4\ b + 1/6\ b\ )\ Fb\ 1/EJ\ - 1\ \ (-1)\ \ (-1)\ \ Fb^2/EJ = -1/12\ \ Fb^2/EJ$

$L^{Xo}_{GH} = \int_o^b (3/2\ x/b + 1/2\ x^2/b^2)\ Fb\ 1/EJ\ dx - 1\ \ (-1)\ \ (-1)\ \ Fb^2/EJ$

$= [3/4\ x^2/b + 1/6\ x^3/b^2\ ]_o^b\ Fb\ 1/EJ\ - 1\ \ (-1)\ \ (-1)\ \ Fb^2/EJ$

$= (3/4\ b + 1/6\ b\ )\ Fb\ 1/EJ\ - 1\ \ (-1)\ \ (-1)\ \ Fb^2/EJ = -1/12\ \ Fb^2/EJ$

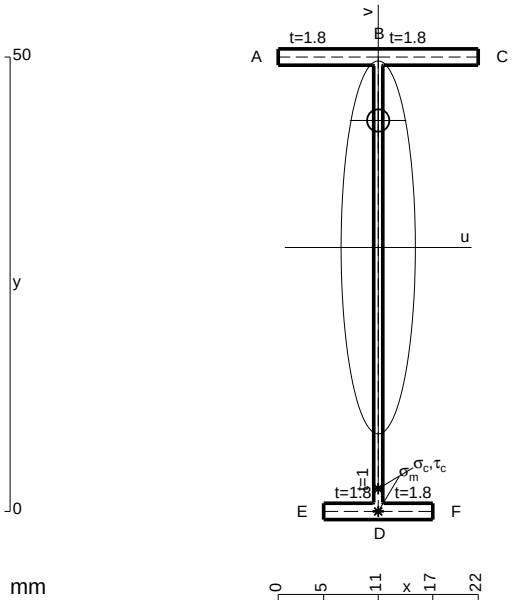

A = 111.2 mm^2
J_u = 46846. mm^4
J_v = 1856. mm^4
J_t = 82.76 mm^4
y_o = 13.97 mm
y_g = 29.05 mm
T_y = -825. N
M_x = -363000. Nmm
x_m = 11. mm
v_m = -29.05 mm
$\sigma_m = -Mv/J_u$ = -225.1 N/mm^2
y_c = 3. mm
u_c = -11. mm
v_c = -26.05 mm
$\sigma_c = -Mv/J_u$ = -225.1 N/mm^2
$\tau_c = TS^*/tJ_u$ = 11.05 N/mm^2
$\tau_g = TS^*/tJ_u$ = 11.05 N/mm^2
t_c = 330. mm
$\sigma_o = \sqrt{\sigma^2 + 3\tau^2}$ = 225.9 N/mm^2

ESΣ05.xxxx.183

@ Adolfo Zavelani Rossi, Politecnico di Milano, vers.27.03.13 01.12.25

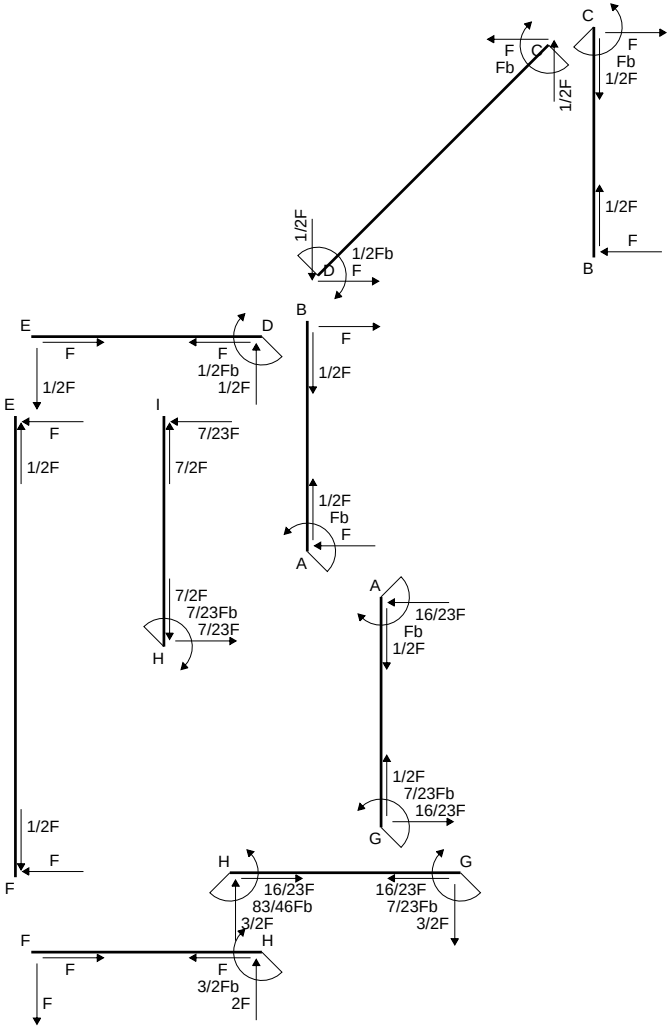
C
F
Fb
C
1/2F
F
Fb
1/2F
1/2F
F
B
1/2F
1/2Fb
D
F
E
D
F
F
1/2Fb
1/2F
B
F
1/2F
E
F
1/2F
I
7/23F
7/2F
1/2F
Fb
F
A
7/2F
7/23Fb
7/23F
H
A
16/23F
Fb
1/2F
1/2F
7/23Fb
16/23F
G
1/2F
F
F
H
16/23F
83/46Fb
3/2F
G
16/23F
7/23Fb
3/2F
F
F
F
H
F
3/2Fb
2F
F

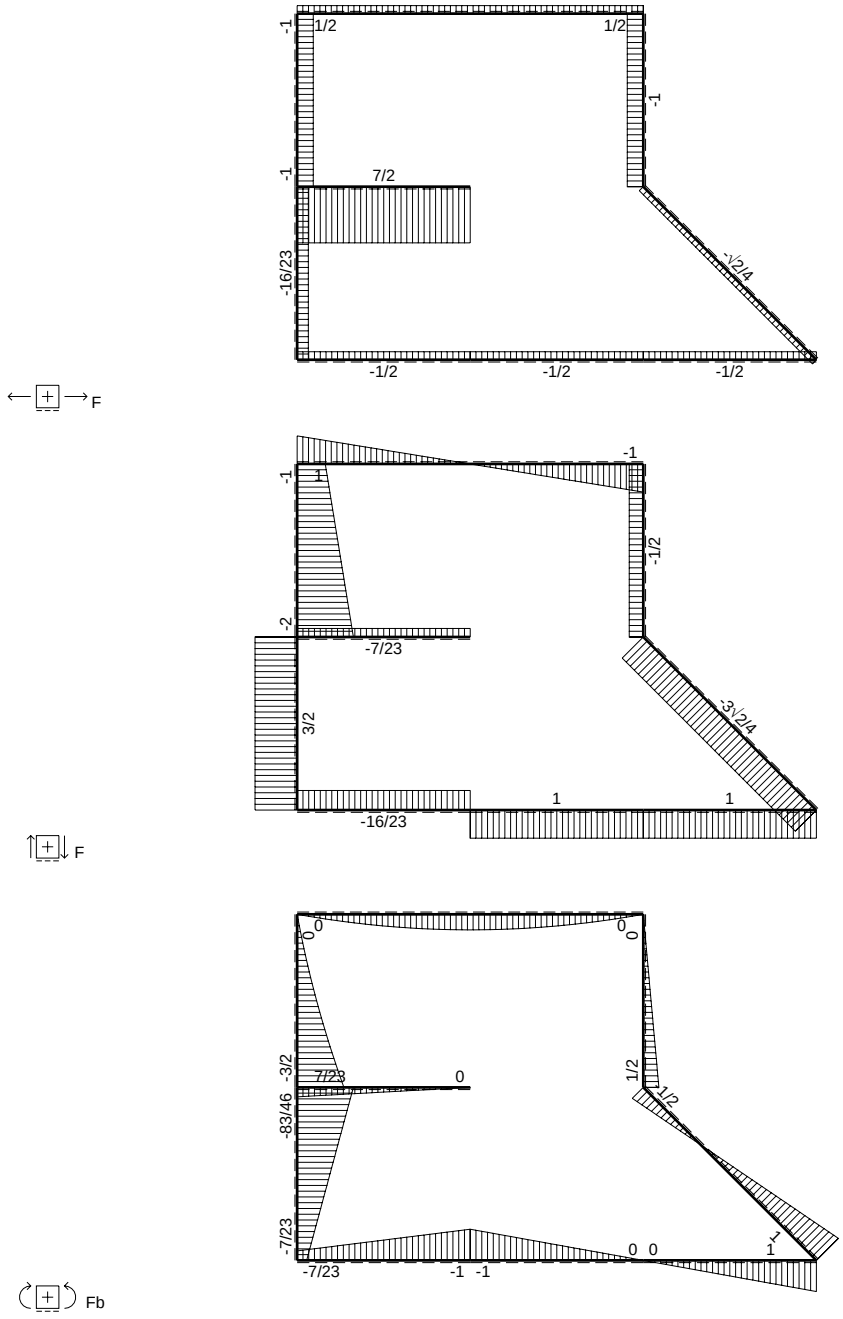
F
-1
1/2
1/2
-1
-1
7/2
-16/23
-√2/4
-1/2
-1/2
-1/2
F
-1
-1
1
-1/2
-2
-7/23
3/2
-3√2/4
1
1
-16/23
Fb
0
0
0
-3/2
7/23
0
1/2
1/2
-83/46
-7/23
0 0
1
-7/23
-1 -1

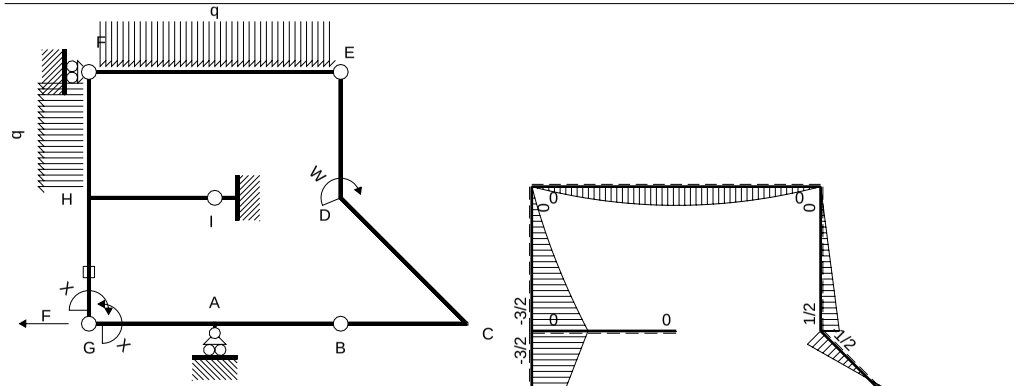

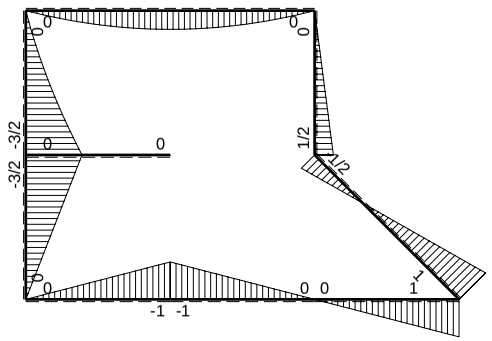

M_0 flessione da carichi assegnati

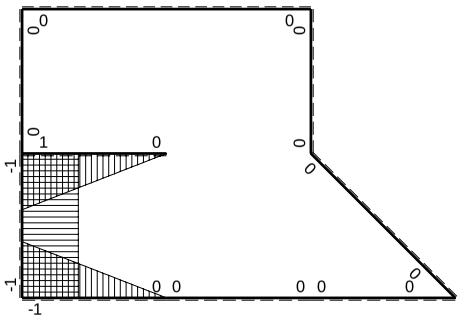

M_x flessione da iperstatica X=1

Quadro contributi PLV per iperstatica $X=W_{GA}$

→	$M_x(x)$	$M_0(x)$	M_xM_0	M_xM_x	$\int M_xM_0/EJdx$	$\int XM_xM_x/EJdx$
AB b	0	-Fb+Fx	0	0	0	0
BA b	0	Fx	0	0		
BC b	0	Fx	0	0	0	0
CB b	0	-Fb+Fx	0	0		
CD √2b	0	Fb-3√2/4Fx	0	0	0	0
DE b	0	1/2Fb-1/2Fx	0	0	0	0
ED b	0	-1/2Fx	0	0		
EF 2b	0	$-Fx+1/2qx^2$	0	0	0	0
FE 2b	0	$Fx-1/2qx^2$	0	0		
GA b	-1+x/b	-Fx	$Fx-Fx^2/b$	$1-2x/b+x^2/b^2$	$1/6Fb^2/EJ$	1/3Xb/EJ
AG b	x/b	Fb-Fx	$Fx-Fx^2/b$	x^2/b^2		
FH b	0	$-Fx-1/2qx^2$	0	0	0	0
HF b	0	$3/2Fb-2Fx+1/2qx^2$	0	0		
HI b	1-x/b	0	0	$1-2x/b+x^2/b^2$	0	1/3Xb/EJ
IH b	-x/b	0	0	x^2/b^2		
HG b	-1	-3/2Fb+3/2Fx	3/2Fb-3/2Fx	1	$3/4Fb^2/EJ$	Xb/EJ
GH b	1	3/2Fx	3/2Fx	1		
HG	elongazione asta $N_{1HG}\varepsilon_{HG}L_{HG}$				$-Fb^2/EJ$	
A	molla nodo $-V_{1A}(V_{0A}+XV_{1A})/k_A$				$-1/2Fb^2/EJ$	1/4Xb/EJ
	totali				$-7/12Fb^2/EJ$	23/12Xb/EJ
	iperstatica $X=W_{GA}$				7/23Fb	

Sviluppi di calcolo iperstatica

$L^{XX}_{GA} = \int_o^b (1 - 2\,x/b + x^2/b^2)\ 1/EJ\ dx = [\,x - x^2/b + 1/3\,x^3/b^2\,]_o^b\ 1/EJ$

$= (\,b - b + 1/3\,b\,)\ 1/EJ\ = 1/3\ b/EJ$

$L^{XX}_{AG} = \int_o^b (\,x^2/b^2\,)\ 1/EJ\ dx = [1/3\,x^3/b^2\,]_o^b\ 1/EJ$

$= (1/3\,b\,)\ 1/EJ\ = 1/3\ b/EJ$

$L^{XX}_{HI} = \int_o^b (1 - 2\,x/b + x^2/b^2)\ 1/EJ\ dx = [\,x - x^2/b + 1/3\,x^3/b^2\,]_o^b\ 1/EJ$

$= (\,b - b + 1/3\,b\,)\ 1/EJ\ = 1/3\ b/EJ$

$L^{XX}_{IH} = \int_o^b (\,x^2/b^2\,)\ 1/EJ\ dx = [1/3\,x^3/b^2\,]_o^b\ 1/EJ$

$= (1/3\,b\,)\ 1/EJ\ = 1/3\ b/EJ$

$L^{XX}_{HG} = \int_o^b (1)\ 1/EJ\ dx = [\,x\,]_o^b\ 1/EJ$

$= (\,b\,)\ 1/EJ\ =\ b/EJ$

$L^{XX}_{GH} = \int_o^b (1)\ 1/EJ\ dx = [\,x\,]_o^b\ 1/EJ$

$= (\,b\,)\ 1/EJ\ =\ b/EJ$

$L^{Xo}_{GA} = \int_o^b (\,x/b - x^2/b^2\,)\ Fb\ 1/EJ\ dx = [1/2\,x^2/b - 1/3\,x^3/b^2\,]_o^b\ Fb\ 1/EJ$

$= (1/2\,b - 1/3\,b\,)\ Fb\ 1/EJ\ = 1/6\ Fb^2/EJ$

$L^{Xo}_{AG} = \int_o^b (\,x/b - x^2/b^2\,)\ Fb\ 1/EJ\ dx = [1/2\,x^2/b - 1/3\,x^3/b^2\,]_o^b\ Fb\ 1/EJ$

$= (1/2\,b - 1/3\,b\,)\ Fb\ 1/EJ\ = 1/6\ Fb^2/EJ$

$L^{Xo}_{HG} = \int_o^b (3/2 - 3/2\,x/b\,)\ Fb\ 1/EJ\ dx - 1\ \ (-1)\ \ (-1)\ \ Fb^2/EJ$

$= [3/2\,x - 3/4\,x^2/b\,]_o^b\ Fb\ 1/EJ\ -\ 1\ \ (-1)\ \ (-1)\ \ Fb^2/EJ$

$= (3/2\,b - 3/4\,b\,)\ Fb\ 1/EJ\ -\ 1\ \ (-1)\ \ (-1)\ \ Fb^2/EJ = -1/4\ \ Fb^2/EJ$

$L^{Xo}_{GH} = \int_o^b (3/2\,x/b\,)\ Fb\ 1/EJ\ dx - 1\ \ (-1)\ \ (-1)\ \ Fb^2/EJ = [3/4\,x^2/b\,]_o^b\ Fb\ 1/EJ\ -\ 1\ \ (-1)\ \ (-1)\ \ Fb^2/EJ$

$= (3/4\,b\,)\ Fb\ 1/EJ\ -\ 1\ \ (-1)\ \ (-1)\ \ Fb^2/EJ = -1/4\ \ Fb^2/EJ$

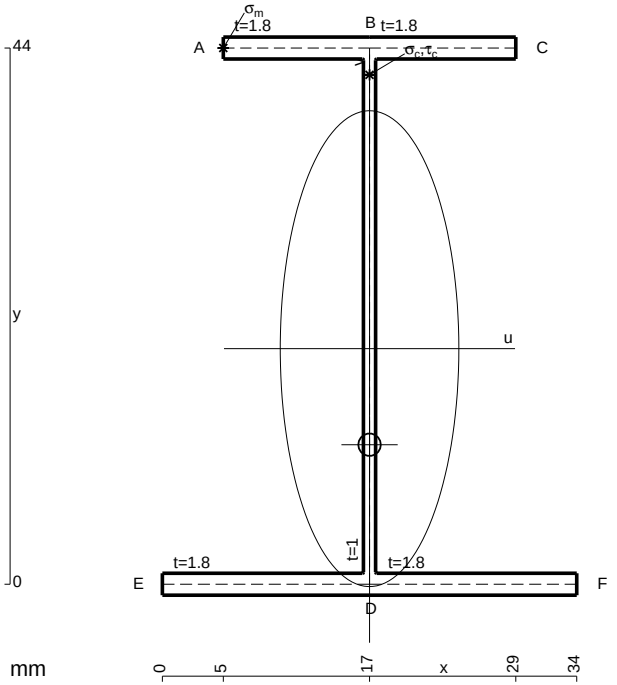

A = 148.4 mm^2
J_u = 56572. mm^4
J_v = 7969. mm^4
J_t = 127.4 mm^4
y_o = -7.883 mm
y_g = 19.33 mm
N = -700. N
T_y = -1400. N
M_x = -556500. Nmm
x_m = 5. mm
y_m = 44. mm
u_m = -12. mm
v_m = 24.67 mm
$\sigma_m = N/A - Mv/J_u$ = 237.9 N/mm^2
x_c = 17. mm
y_c = 44. mm
v_c = 24.67 mm
$\sigma_c = N/A - Mv/J_u$ = 237.9 N/mm^2
$\tau_c = TS^*/tJ_u$ = 26.37 N/mm^2
$\tau_g = TS^*/tJ_u$ = 26.37 N/mm^2
t_c = 700. mm
$\sigma_o = \sqrt{\sigma^2 + 3\tau^2}$ = 242.3 N/mm^2

ESΣ05.xxxx.184

@ Adolfo Zavelani Rossi, Politecnico di Milano, vers.27.03.13 01.12.25

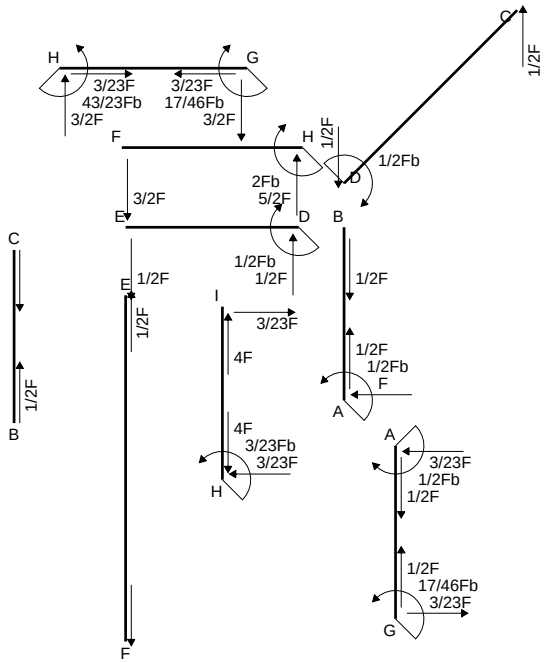
H
G
3/23F
43/23Fb
3/2F
3/23F
17/46Fb
3/2F
F
H
1/2F
C
1/2F
1/2Fb
D
2Fb
5/2F
3/2F
E
D
B
1/2Fb
1/2F
1/2F
E
1/2F
I
3/23F
4F
1/2F
1/2Fb
F
A
C
1/2F
B
4F
3/23Fb
3/23F
H
A
3/23F
1/2Fb
1/2F
1/2F
17/46Fb
3/23F
G
F

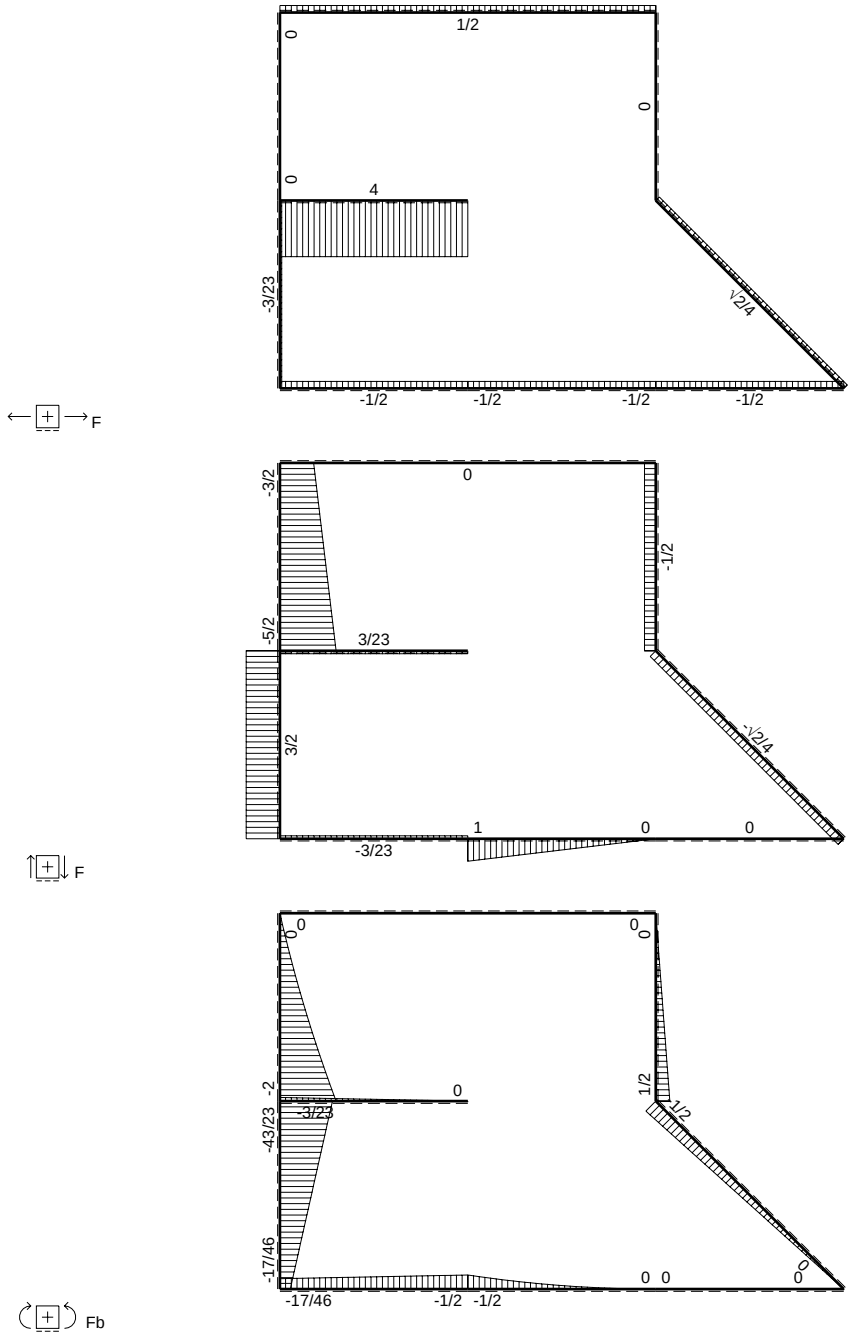
F
1/2
0
0
0
4
-3/23
√2/4
-1/2
-1/2
-1/2
-1/2
F
-3/2
0
-1/2
-5/2
3/23
3/2
-√2/4
1
0
0
-3/23
F
0
0
0
0
-2
0
1/2
-43/23
3/23
-1/2
-17/46
0 0
0
-17/46
-1/2 -1/2
Fb

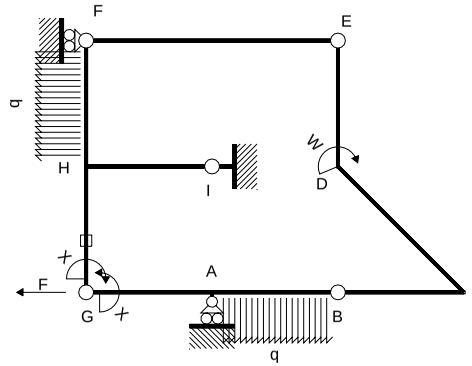

Schema di calcolo iperstatico

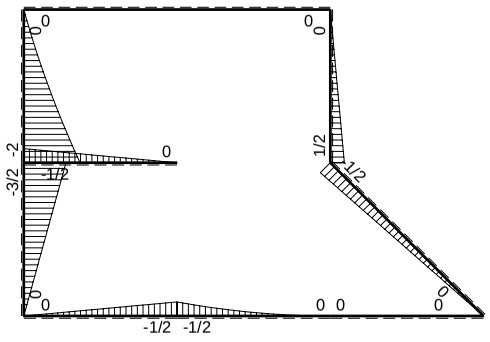

M_0 flessione da carichi assegnati

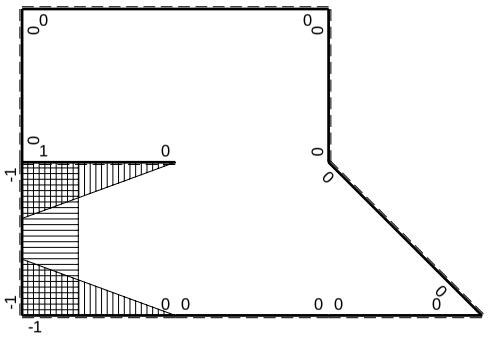

M_x flessione da iperstatica X=1

Quadro contributi PLV per iperstatica $X=W_{GA}$

→	$M_x(x)$	$M_0(x)$	M_xM_0	M_xM_x	$\int M_xM_0/EJdx$	$\int XM_xM_x/EJdx$
AB b	0	$-1/2Fb+Fx-1/2qx^2$	0	0	0	0
BA b	0	$1/2qx^2$	0	0		
BC b	0	0	0	0	0	0
CB b	0	0	0	0		
CD $\sqrt{2}$b	0	$-\sqrt{2}/4Fx$	0	0	0	0
DE b	0	1/2Fb-1/2Fx	0	0	0	0
ED b	0	-1/2Fx	0	0		
EF 2b	0	0	0	0	0	0
FE 2b	0	0	0	0		
GA b	-1+x/b	-1/2Fx	$1/2Fx-1/2Fx^2/b$	$1-2x/b+x^2/b^2$	$1/12Fb^2/EJ$	1/3Xb/EJ
AG b	x/b	1/2Fb-1/2Fx	$1/2Fx-1/2Fx^2/b$	x^2/b^2		
FH b	0	$-3/2Fx-1/2qx^2$	0	0	0	0
HF b	0	$2Fb-5/2Fx+1/2qx^2$	0	0		
HI b	1-x/b	-1/2Fb+1/2Fx	$-1/2Fb+Fx-1/2Fx^2/b$	$1-2x/b+x^2/b^2$	$-1/6Fb^2/EJ$	1/3Xb/EJ
IH b	-x/b	1/2Fx	$-1/2Fx^2/b$	x^2/b^2		
HG b	-1	-3/2Fb+3/2Fx	3/2Fb-3/2Fx	1	$3/4Fb^2/EJ$	Xb/EJ
GH b	1	3/2Fx	3/2Fx	1		
HG	elongazione asta $N_{1HG}\varepsilon_{HG}L_{HG}$				$-Fb^2/EJ$	
A	molla nodo $-V_{1A}(V_{0A}+XV_{1A})/k_A$				$-3/8Fb^2/EJ$	1/4Xb/EJ
	totali				$-17/24Fb^2/EJ$	23/12Xb/EJ
	iperstatica $X=W_{GA}$				17/46Fb	

Sviluppi di calcolo iperstatica

$L^{XX}_{GA} = \int_o^b (1 - 2\,x/b + x^2/b^2)\ 1/EJ\ dx = [\,x - x^2/b + 1/3\,x^3/b^2\,]_o^b\ 1/EJ$

$= (\,b - b + 1/3\,b\,)\ 1/EJ = 1/3\ b/EJ$

$L^{XX}_{AG} = \int_o^b (\,x^2/b^2\,)\ 1/EJ\ dx = [1/3\,x^3/b^2\,]_o^b\ 1/EJ$

$= (1/3\,b\,)\ 1/EJ = 1/3\ b/EJ$

$L^{XX}_{HI} = \int_o^b (1 - 2\,x/b + x^2/b^2)\ 1/EJ\ dx = [\,x - x^2/b + 1/3\,x^3/b^2\,]_o^b\ 1/EJ$

$= (\,b - b + 1/3\,b\,)\ 1/EJ = 1/3\ b/EJ$

$L^{XX}_{IH} = \int_o^b (\,x^2/b^2\,)\ 1/EJ\ dx = [1/3\,x^3/b^2\,]_o^b\ 1/EJ$

$= (1/3\,b\,)\ 1/EJ = 1/3\ b/EJ$

$L^{XX}_{HG} = \int_o^b (1)\ 1/EJ\ dx = [\,x\,]_o^b\ 1/EJ$

$= (\,b\,)\ 1/EJ = b/EJ$

$L^{XX}_{GH} = \int_o^b (1)\ 1/EJ\ dx = [\,x\,]_o^b\ 1/EJ$

$= (\,b\,)\ 1/EJ = b/EJ$

$L^{Xo}_{GA} = \int_o^b (1/2\,x/b - 1/2\,x^2/b^2)\ Fb\ 1/EJ\ dx = [1/4\,x^2/b - 1/6\,x^3/b^2\,]_o^b\ Fb\ 1/EJ$

$= (1/4\,b - 1/6\,b\,)\ Fb\ 1/EJ = 1/12\ Fb^2/EJ$

$L^{Xo}_{AG} = \int_o^b (1/2\,x/b - 1/2\,x^2/b^2)\ Fb\ 1/EJ\ dx = [1/4\,x^2/b - 1/6\,x^3/b^2\,]_o^b\ Fb\ 1/EJ$

$= (1/4\,b - 1/6\,b\,)\ Fb\ 1/EJ = 1/12\ Fb^2/EJ$

$L^{Xo}_{HI} = \int_o^b (-1/2 + x/b - 1/2\,x^2/b^2)\ Fb\ 1/EJ\ dx = [-1/2\,x + 1/2\,x^2/b - 1/6\,x^3/b^2\,]_o^b\ Fb\ 1/EJ$

$= (-1/2\,b + 1/2\,b - 1/6\,b\,)\ Fb\ 1/EJ = -1/6\ Fb^2/EJ$

$L^{Xo}_{IH} = \int_o^b (-1/2\,x^2/b^2)\ Fb\ 1/EJ\ dx = [-1/6\,x^3/b^2\,]_o^b\ Fb\ 1/EJ$

$= (-1/6\,b\,)\ Fb\ 1/EJ = -1/6\ Fb^2/EJ$

$L^{Xo}_{HG} = \int_o^b (3/2 - 3/2\,x/b\,)\ Fb\ 1/EJ\ dx - 1\ \ (-1)\ \ (-1)\ \ Fb^2/EJ$

$= [3/2\,x - 3/4\,x^2/b\,]_o^b\ Fb\ 1/EJ\ - 1\ \ (-1)\ \ (-1)\ \ Fb^2/EJ$

$= (3/2\,b - 3/4\,b\,)\ Fb\ 1/EJ\ - 1\ \ (-1)\ \ (-1)\ \ Fb^2/EJ = -1/4\ \ Fb^2/EJ$

$L^{Xo}_{GH} = \int_o^b (3/2\,x/b\,)\ Fb\ 1/EJ\ dx - 1\ \ (-1)\ \ (-1)\ \ Fb^2/EJ = [3/4\,x^2/b\,]_o^b\ Fb\ 1/EJ\ - 1\ \ (-1)\ \ (-1)\ \ Fb^2/EJ$

$= (3/4\,b\,)\ Fb\ 1/EJ\ - 1\ \ (-1)\ \ (-1)\ \ Fb^2/EJ = -1/4\ \ Fb^2/EJ$

PROCEDIMENTO E RISULTATI Nome: ESΣ05.xxxx.185

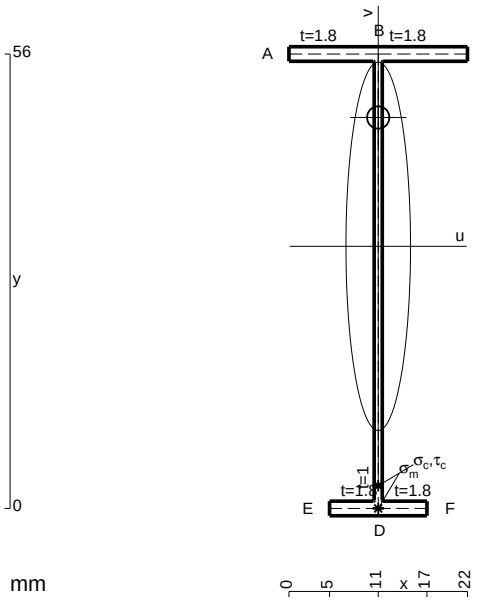

A = 117.2 mm^2
J_u = 60448. mm^4
J_v = 1856. mm^4
J_t = 84.76 mm^4
y_o = 15.88 mm
y_g = 32.3 mm
T_y = -625. N
M_x = -360000. Nmm
x_m = 11. mm
v_m = -32.3 mm
$\sigma_m = -Mv/J_u$ = -192.4 N/mm^2
y_c = 3. mm
u_c = -11. mm
v_c = -29.3 mm
$\sigma_c = -Mv/J_u$ = -192.4 N/mm^2
$\tau_c = TS^*/tJ_u$ = 7.214 N/mm^2
$\tau_g = TS^*/tJ_u$ = 7.214 N/mm^2
t_c = 250. mm
$\sigma_o = \sqrt{\sigma^2 + 3\tau^2}$ = 192.8 N/mm^2

ESΣ05.xxxx.185

@ Adolfo Zavelani Rossi, Politecnico di Milano, vers.27.03.13 01.12.25

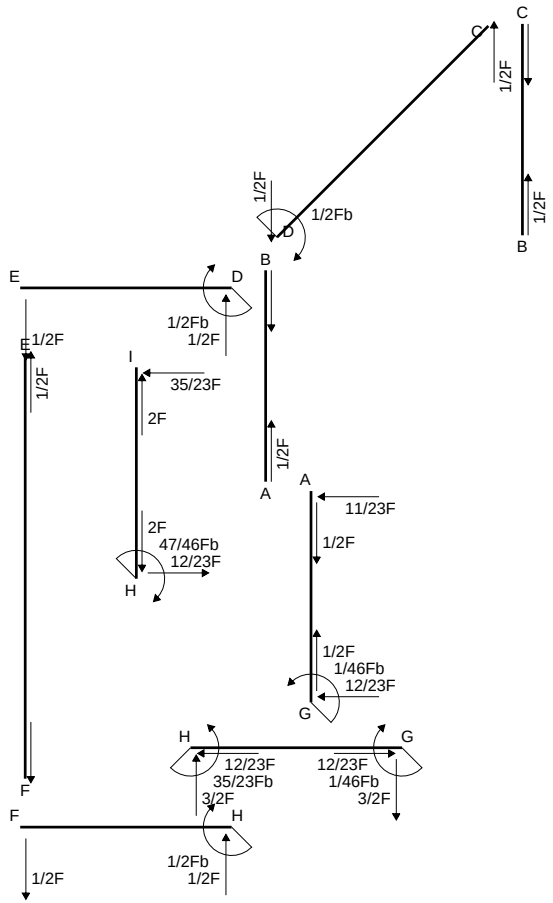
C
C
1/2F
1/2F
B
1/2Fb
D
B
E
D
1/2Fb
1/2F
E
1/2F
1/2F
I
35/23F
2F
1/2F
A
A
11/23F
2F
47/46Fb
12/23F
H
1/2F
1/46Fb
12/23F
G
H
G
12/23F
35/23Fb
3/2F
12/23F
1/46Fb
3/2F
F
H
F
1/2Fb
1/2F
1/2F

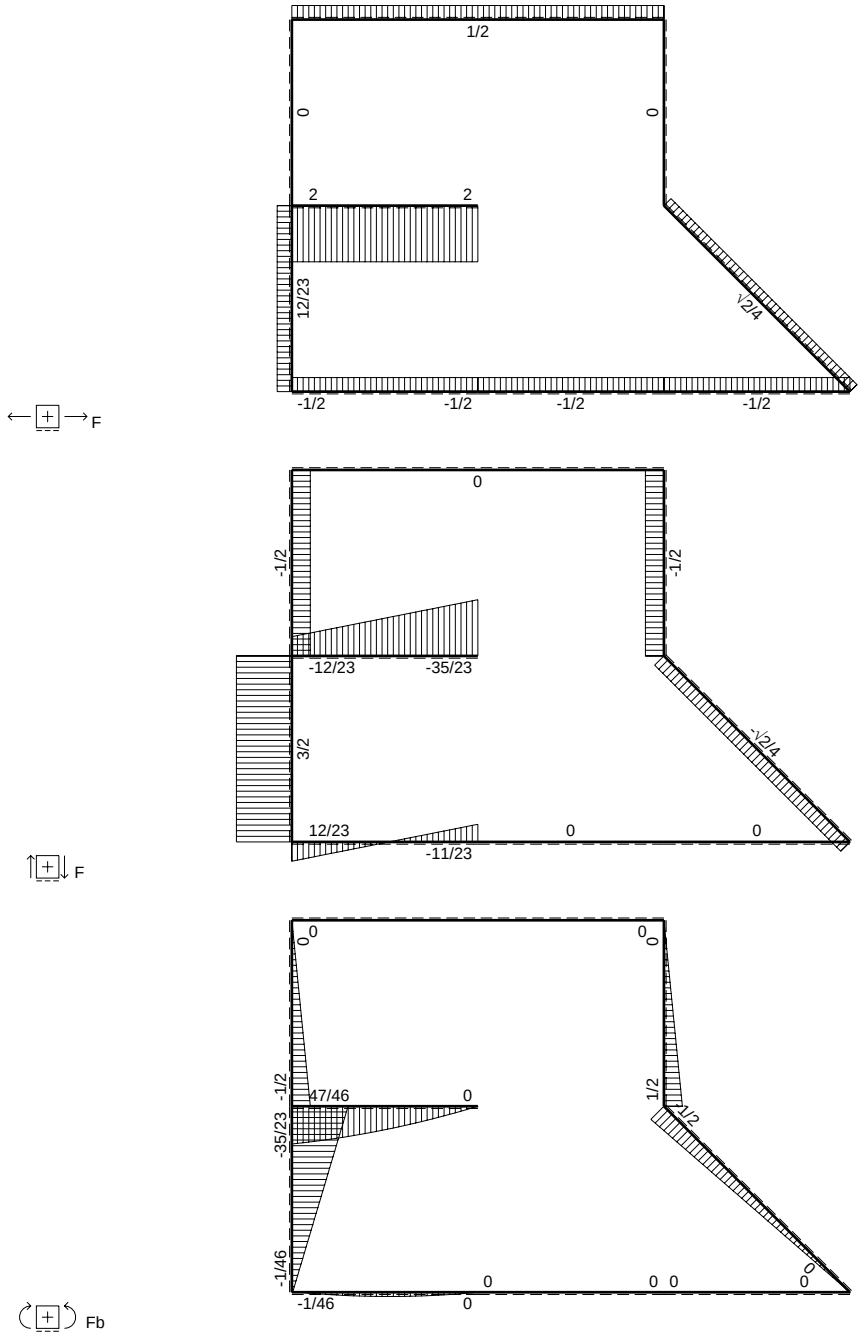
F
1/2
0
0
2
2
12/23
√2/4
-1/2
-1/2
-1/2
-1/2
F
0
-1/2
-1/2
-12/23
-35/23
3/2
-√2/4
12/23
0
0
-11/23
Fb
0
0
0
0
-1/2
47/46
0
1/2
1/2
-35/23
-1/46
0
0
0 0
0
-1/46
0

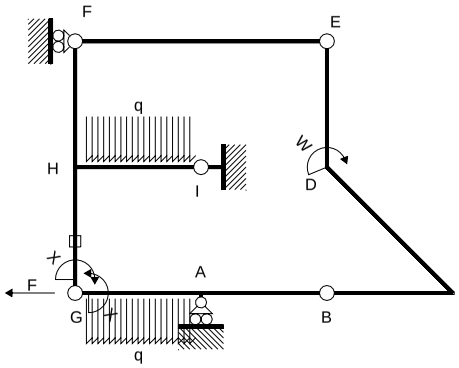

Schema di calcolo iperstatico

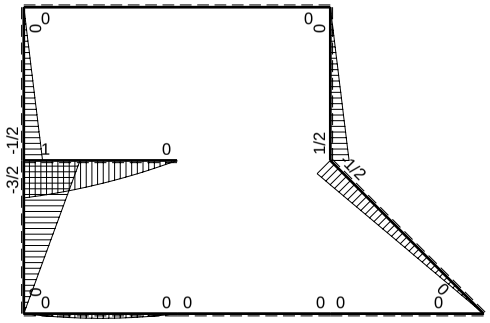

M_0 flessione da carichi assegnati

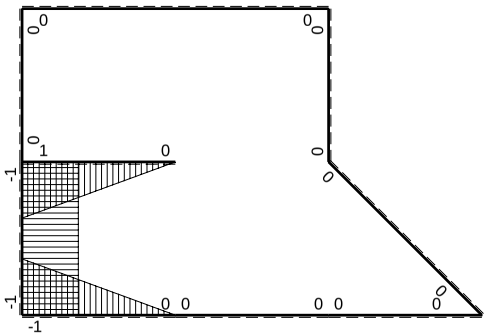

M_x flessione da iperstatica X=1

Quadro contributi PLV per iperstatica $X=W_{GA}$

→	$M_x(x)$	$M_0(x)$	M_xM_0	M_xM_x	$\int M_xM_0/EJdx$	$\int XM_xM_x/EJdx$
AB b	0	0	0	0	0	0
BA b	0	0	0	0		
BC b	0	0	0	0	0	0
CB b	0	0	0	0		
CD √2b	0	-√2/4Fx	0	0	0	0
DE b	0	1/2Fb-1/2Fx	0	0	0	0
ED b	0	-1/2Fx	0	0		
EF 2b	0	0	0	0	0	0
FE 2b	0	0	0	0		
GA b	-1+x/b	$1/2Fx-1/2qx^2$	$-1/2Fx+Fx^2/b-1/2qx^3/b$	$1-2x/b+x^2/b^2$	$-1/24Fb^2/EJ$	1/3Xb/EJ
AG b	x/b	$-1/2Fx+1/2qx^2$	$-1/2Fx^2/b+1/2qx^3/b$	x^2/b^2		
FH b	0	-1/2Fx	0	0	0	0
HF b	0	1/2Fb-1/2Fx	0	0		
HI b	1-x/b	$Fb-1/2Fx-1/2qx^2$	$Fb-3/2Fx+1/2qx^3/b$	$1-2x/b+x^2/b^2$	$3/8Fb^2/EJ$	1/3Xb/EJ
IH b	-x/b	$-3/2Fx+1/2qx^2$	$3/2Fx^2/b-1/2qx^3/b$	x^2/b^2		
HG b	-1	-3/2Fb+3/2Fx	3/2Fb-3/2Fx	1	$3/4Fb^2/EJ$	Xb/EJ
GH b	1	3/2Fx	3/2Fx	1		
HG	elongazione asta $N_{1HG}\varepsilon_{HG}L_{HG}$				$-Fb^2/EJ$	
A	molla nodo $-V_{1A}(V_{0A}+XV_{1A})/k_A$				$-1/8Fb^2/EJ$	1/4Xb/EJ
	totali				$-1/24Fb^2/EJ$	23/12Xb/EJ
	iperstatica $X=W_{GA}$				1/46Fb	

Sviluppi di calcolo iperstatica

$L^{XX}_{GA} = \int_o^b (1 - 2\,x/b + x^2/b^2)\ 1/EJ\ dx = [\,x - x^2/b + 1/3\,x^3/b^2\,]_o^b\ 1/EJ$

$= (\,b - b + 1/3\,b\,)\ 1/EJ = 1/3\ b/EJ$

$L^{XX}_{AG} = \int_o^b (\,x^2/b^2\,)\ 1/EJ\ dx = [1/3\,x^3/b^2\,]_o^b\ 1/EJ$

$= (1/3\,b\,)\ 1/EJ = 1/3\ b/EJ$

$L^{XX}_{HI} = \int_o^b (1 - 2\,x/b + x^2/b^2)\ 1/EJ\ dx = [\,x - x^2/b + 1/3\,x^3/b^2\,]_o^b\ 1/EJ$

$= (\,b - b + 1/3\,b\,)\ 1/EJ = 1/3\ b/EJ$

$L^{XX}_{IH} = \int_o^b (\,x^2/b^2\,)\ 1/EJ\ dx = [1/3\,x^3/b^2\,]_o^b\ 1/EJ$

$= (1/3\,b\,)\ 1/EJ = 1/3\ b/EJ$

$L^{XX}_{HG} = \int_o^b (1)\ 1/EJ\ dx = [\,x\,]_o^b\ 1/EJ$

$= (\,b\,)\ 1/EJ = b/EJ$

$L^{XX}_{GH} = \int_o^b (1)\ 1/EJ\ dx = [\,x\,]_o^b\ 1/EJ$

$= (\,b\,)\ 1/EJ = b/EJ$

$L^{Xo}_{GA} = \int_o^b (-1/2\,x/b + x^2/b^2 - 1/2\,x^3/b^3)\ Fb\ 1/EJ\ dx = [-1/4\,x^2/b + 1/3\,x^3/b^2 - 1/8\,x^4/b^3\,]_o^b\ Fb\ 1/EJ$

$= (-1/4\,b + 1/3\,b - 1/8\,b\,)\ Fb\ 1/EJ = -1/24\ Fb^2/EJ$

$L^{Xo}_{AG} = \int_o^b (-1/2\,x^2/b^2 + 1/2\,x^3/b^3)\ Fb\ 1/EJ\ dx = [-1/6\,x^3/b^2 + 1/8\,x^4/b^3\,]_o^b\ Fb\ 1/EJ$

$= (-1/6\,b + 1/8\,b\,)\ Fb\ 1/EJ = -1/24\ Fb^2/EJ$

$L^{Xo}_{HI} = \int_o^b (1 - 3/2\,x/b + 1/2\,x^3/b^3)\ Fb\ 1/EJ\ dx = [\,x - 3/4\,x^2/b + 1/8\,x^4/b^3\,]_o^b\ Fb\ 1/EJ$

$= (\,b - 3/4\,b + 1/8\,b\,)\ Fb\ 1/EJ = 3/8\ Fb^2/EJ$

$L^{Xo}_{IH} = \int_o^b (3/2\,x^2/b^2 - 1/2\,x^3/b^3)\ Fb\ 1/EJ\ dx = [1/2\,x^3/b^2 - 1/8\,x^4/b^3\,]_o^b\ Fb\ 1/EJ$

$= (1/2\,b - 1/8\,b\,)\ Fb\ 1/EJ = 3/8\ Fb^2/EJ$

$L^{Xo}_{HG} = \int_o^b (3/2 - 3/2\,x/b\,)\ Fb\ 1/EJ\ dx - 1\ \ (-1)\ \ (-1)\ \ Fb^2/EJ$

$= [3/2\,x - 3/4\,x^2/b\,]_o^b\ Fb\ 1/EJ\ - 1\ \ (-1)\ \ (-1)\ \ Fb^2/EJ$

$= (3/2\,b - 3/4\,b\,)\ Fb\ 1/EJ\ - 1\ \ (-1)\ \ (-1)\ \ Fb^2/EJ = -1/4\ \ Fb^2/EJ$

$L^{Xo}_{GH} = \int_o^b (3/2\,x/b\,)\ Fb\ 1/EJ\ dx - 1\ \ (-1)\ \ (-1)\ \ Fb^2/EJ = [3/4\,x^2/b\,]_o^b\ Fb\ 1/EJ\ - 1\ \ (-1)\ \ (-1)\ \ Fb^2/EJ$

$= (3/4\,b\,)\ Fb\ 1/EJ\ - 1\ \ (-1)\ \ (-1)\ \ Fb^2/EJ = -1/4\ \ Fb^2/EJ$

PROCEDIMENTO E RISULTATI Nome: ESΣ05.xxxx.186

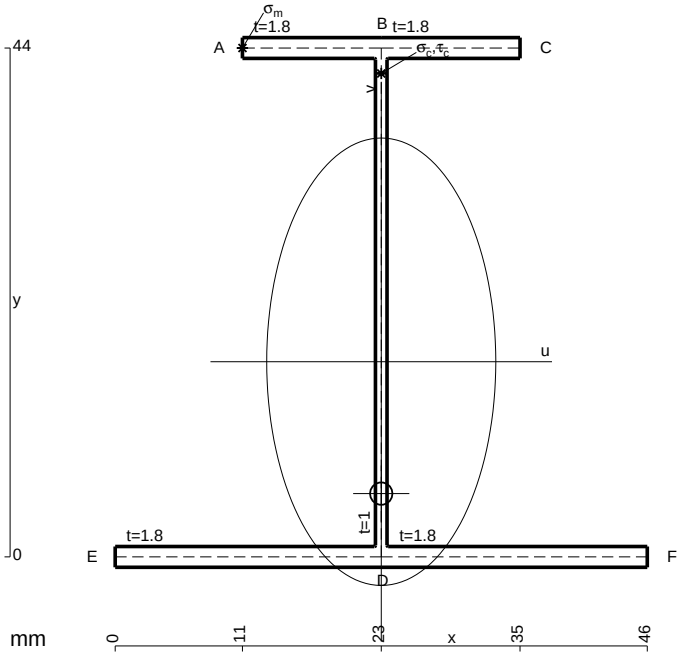

A = 170. mm^2
J_u = 63618. mm^4
J_v = 16674. mm^4
J_t = 150.7 mm^4
y_o = -11.4 mm
y_g = 16.88 mm
T_y = -820. N
M_x = 492000. Nmm
x_m = 11. mm
y_m = 44. mm
u_m = -12. mm
v_m = 27.12 mm
$\sigma_m = -Mv/J_u = -209.8\ N/mm^2$
x_c = 23. mm
y_c = 44. mm
v_c = 27.12 mm
$\sigma_c = -Mv/J_u = -209.8\ N/mm^2$
$\tau_c = TS^*/tJ_u = 15.1\ N/mm^2$
$\tau_g = TS^*/tJ_u = 15.1\ N/mm^2$
t_c = 1640. mm
$\sigma_o = \sqrt{\sigma^2 + 3\tau^2} = 211.4\ N/mm^2$

@ Adolfo Zavelani Rossi, Politecnico di Milano, vers.27.03.13 01.12.25

ESΣ05.xxxx.186

@ Adolfo Zavelani Rossi, Politecnico di Milano, vers.27.03.13 01.12.25

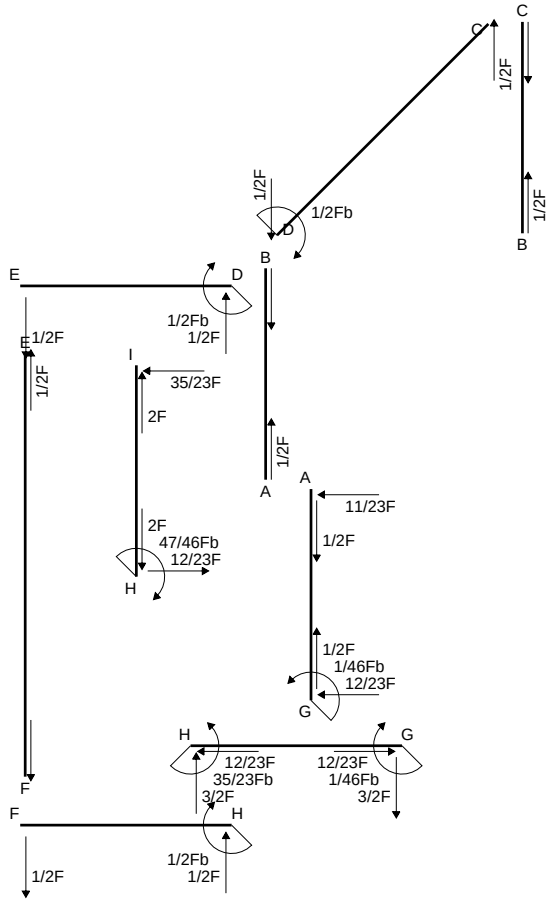
C
C
1/2F
1/2F
B
1/2Fb
D
B
E
D
1/2Fb
1/2F
E
1/2F
1/2F
I
35/23F
2F
1/2F
A
A
11/23F
2F
47/46Fb
12/23F
H
1/2F
1/46Fb
12/23F
G
H
G
12/23F
35/23Fb
3/2F
12/23F
1/46Fb
3/2F
F
H
F
1/2Fb
1/2F
1/2F

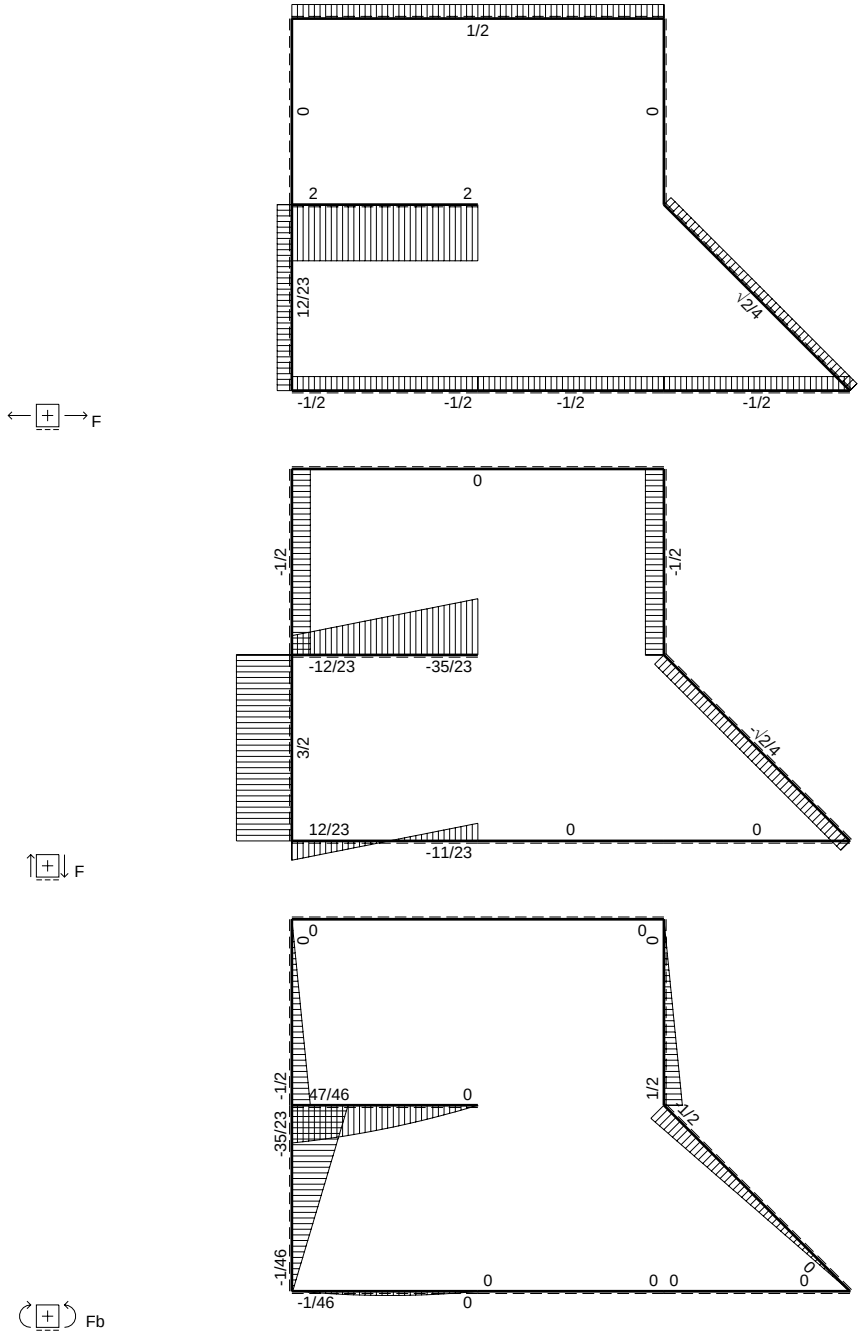
F
1/2
0
0
2
2
12/23
√2/4
-1/2
-1/2
-1/2
-1/2
F
0
-1/2
-1/2
-12/23
-35/23
3/2
-√2/4
12/23
0
0
-11/23
Fb
0
0
0
0
-1/2
47/46
0
1/2
1/2
-35/23
-1/46
0
0
0 0
0
-1/46
0

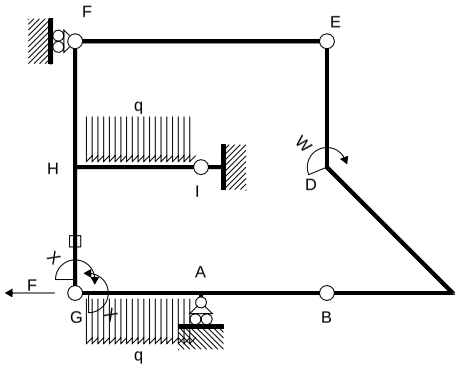

Schema di calcolo iperstatico

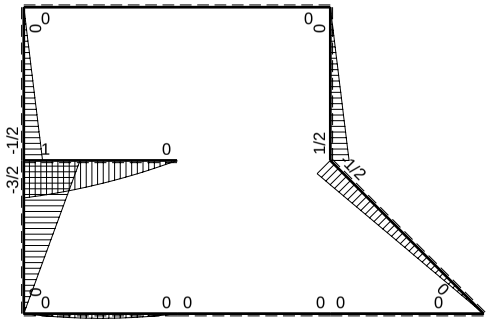

M_0 flessione da carichi assegnati

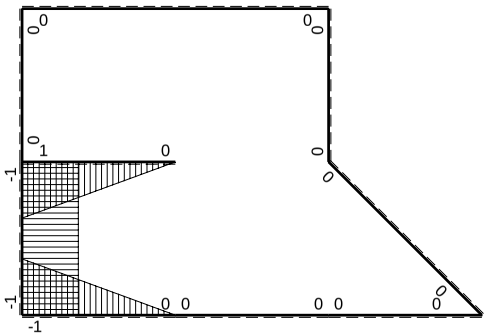

M_x flessione da iperstatica X=1

Quadro contributi PLV per iperstatica $X=W_{GA}$

→	$M_x(x)$	$M_0(x)$	M_xM_0	M_xM_x	$\int M_xM_0/EJdx$	$\int XM_xM_x/EJdx$
AB b	0	0	0	0	0	0
BA b	0	0	0	0		
BC b	0	0	0	0	0	0
CB b	0	0	0	0		
CD √2b	0	-√2/4Fx	0	0	0	0
DE b	0	1/2Fb-1/2Fx	0	0	0	0
ED b	0	-1/2Fx	0	0		
EF 2b	0	0	0	0	0	0
FE 2b	0	0	0	0		
GA b	-1+x/b	$1/2Fx-1/2qx^2$	$-1/2Fx+Fx^2/b-1/2qx^3/b$	$1-2x/b+x^2/b^2$	$-1/24Fb^2/EJ$	1/3Xb/EJ
AG b	x/b	$-1/2Fx+1/2qx^2$	$-1/2Fx^2/b+1/2qx^3/b$	x^2/b^2		
FH b	0	-1/2Fx	0	0	0	0
HF b	0	1/2Fb-1/2Fx	0	0		
HI b	1-x/b	$Fb-1/2Fx-1/2qx^2$	$Fb-3/2Fx+1/2qx^3/b$	$1-2x/b+x^2/b^2$	$3/8Fb^2/EJ$	1/3Xb/EJ
IH b	-x/b	$-3/2Fx+1/2qx^2$	$3/2Fx^2/b-1/2qx^3/b$	x^2/b^2		
HG b	-1	-3/2Fb+3/2Fx	3/2Fb-3/2Fx	1	$3/4Fb^2/EJ$	Xb/EJ
GH b	1	3/2Fx	3/2Fx	1		
HG	elongazione asta $N_{1HG}\varepsilon_{HG}L_{HG}$				$-Fb^2/EJ$	
A	molla nodo $-V_{1A}(V_{0A}+XV_{1A})/k_A$				$-1/8Fb^2/EJ$	1/4Xb/EJ
	totali				$-1/24Fb^2/EJ$	23/12Xb/EJ
	iperstatica $X=W_{GA}$				1/46Fb	

Sviluppi di calcolo iperstatica

$L^{XX}_{GA} = \int_o^b (1 - 2\,x/b + x^2/b^2)\ 1/EJ\ dx = [\,x - x^2/b + 1/3\,x^3/b^2\,]_o^b\ 1/EJ$

$= (\,b - b + 1/3\,b\,)\ 1/EJ = 1/3\ b/EJ$

$L^{XX}_{AG} = \int_o^b (\,x^2/b^2\,)\ 1/EJ\ dx = [1/3\,x^3/b^2\,]_o^b\ 1/EJ$

$= (1/3\,b\,)\ 1/EJ = 1/3\ b/EJ$

$L^{XX}_{HI} = \int_o^b (1 - 2\,x/b + x^2/b^2)\ 1/EJ\ dx = [\,x - x^2/b + 1/3\,x^3/b^2\,]_o^b\ 1/EJ$

$= (\,b - b + 1/3\,b\,)\ 1/EJ = 1/3\ b/EJ$

$L^{XX}_{IH} = \int_o^b (\,x^2/b^2\,)\ 1/EJ\ dx = [1/3\,x^3/b^2\,]_o^b\ 1/EJ$

$= (1/3\,b\,)\ 1/EJ = 1/3\ b/EJ$

$L^{XX}_{HG} = \int_o^b (1)\ 1/EJ\ dx = [\,x\,]_o^b\ 1/EJ$

$= (\,b\,)\ 1/EJ = b/EJ$

$L^{XX}_{GH} = \int_o^b (1)\ 1/EJ\ dx = [\,x\,]_o^b\ 1/EJ$

$= (\,b\,)\ 1/EJ = b/EJ$

$L^{Xo}_{GA} = \int_o^b (-1/2\,x/b + x^2/b^2 - 1/2\,x^3/b^3)\ Fb\ 1/EJ\ dx = [-1/4\,x^2/b + 1/3\,x^3/b^2 - 1/8\,x^4/b^3\,]_o^b\ Fb\ 1/EJ$

$= (-1/4\,b + 1/3\,b - 1/8\,b\,)\ Fb\ 1/EJ = -1/24\ Fb^2/EJ$

$L^{Xo}_{AG} = \int_o^b (-1/2\,x^2/b^2 + 1/2\,x^3/b^3)\ Fb\ 1/EJ\ dx = [-1/6\,x^3/b^2 + 1/8\,x^4/b^3\,]_o^b\ Fb\ 1/EJ$

$= (-1/6\,b + 1/8\,b\,)\ Fb\ 1/EJ = -1/24\ Fb^2/EJ$

$L^{Xo}_{HI} = \int_o^b (1 - 3/2\,x/b + 1/2\,x^3/b^3)\ Fb\ 1/EJ\ dx = [\,x - 3/4\,x^2/b + 1/8\,x^4/b^3\,]_o^b\ Fb\ 1/EJ$

$= (\,b - 3/4\,b + 1/8\,b\,)\ Fb\ 1/EJ = 3/8\ Fb^2/EJ$

$L^{Xo}_{IH} = \int_o^b (3/2\,x^2/b^2 - 1/2\,x^3/b^3)\ Fb\ 1/EJ\ dx = [1/2\,x^3/b^2 - 1/8\,x^4/b^3\,]_o^b\ Fb\ 1/EJ$

$= (1/2\,b - 1/8\,b\,)\ Fb\ 1/EJ = 3/8\ Fb^2/EJ$

$L^{Xo}_{HG} = \int_o^b (3/2 - 3/2\,x/b\,)\ Fb\ 1/EJ\ dx - 1\ \ (-1)\ \ (-1)\ \ Fb^2/EJ$

$= [3/2\,x - 3/4\,x^2/b\,]_o^b\ Fb\ 1/EJ\ - 1\ \ (-1)\ \ (-1)\ \ Fb^2/EJ$

$= (3/2\,b - 3/4\,b\,)\ Fb\ 1/EJ\ - 1\ \ (-1)\ \ (-1)\ \ Fb^2/EJ = -1/4\ \ Fb^2/EJ$

$L^{Xo}_{GH} = \int_o^b (3/2\,x/b\,)\ Fb\ 1/EJ\ dx - 1\ \ (-1)\ \ (-1)\ \ Fb^2/EJ = [3/4\,x^2/b\,]_o^b\ Fb\ 1/EJ\ - 1\ \ (-1)\ \ (-1)\ \ Fb^2/EJ$

$= (3/4\,b\,)\ Fb\ 1/EJ\ - 1\ \ (-1)\ \ (-1)\ \ Fb^2/EJ = -1/4\ \ Fb^2/EJ$

PROCEDIMENTO E RISULTATI Nome: ESΣ05.xxxx.187

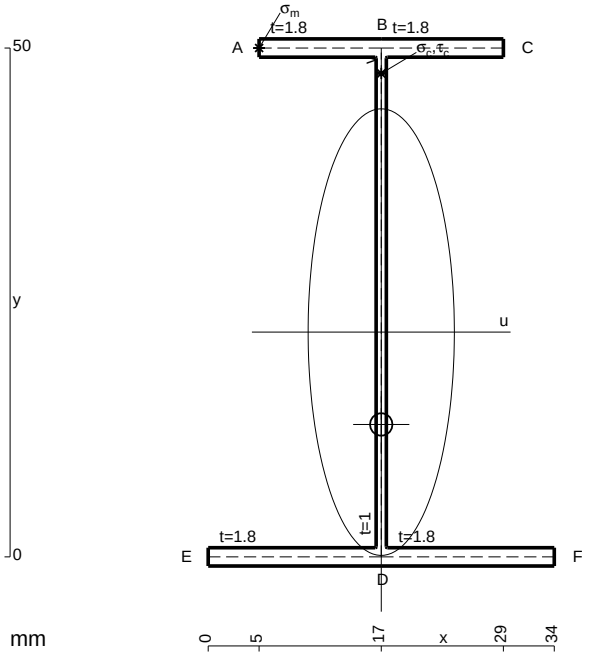

A = 154.4 mm^2
J_u = 74355. mm^4
J_v = 7969. mm^4
J_t = 129.4 mm^4
y_o = -9.075 mm
y_g = 22.09 mm
T_y = -800. N
M_x = 584000. Nmm
x_m = 5. mm
y_m = 50. mm
u_m = -12. mm
v_m = 27.91 mm
$\sigma_m = -Mv/J_u$ = -219.2 N/mm^2
x_c = 17. mm
y_c = 50. mm
v_c = 27.91 mm
$\sigma_c = -Mv/J_u$ = -219.2 N/mm^2
$\tau_c = TS^*/tJ_u$ = 12.97 N/mm^2
$\tau_g = TS^*/tJ_u$ = 12.97 N/mm^2
t_c = 1600. mm
$\sigma_o = \sqrt{\sigma^2 + 3\tau^2}$ = 220.4 N/mm^2

@ Adolfo Zavelani Rossi, Politecnico di Milano, vers.27.03.13 01.12.25

ESΣ05.xxxx.187

@ Adolfo Zavelani Rossi, Politecnico di Milano, vers.27.03.13 01.12.25

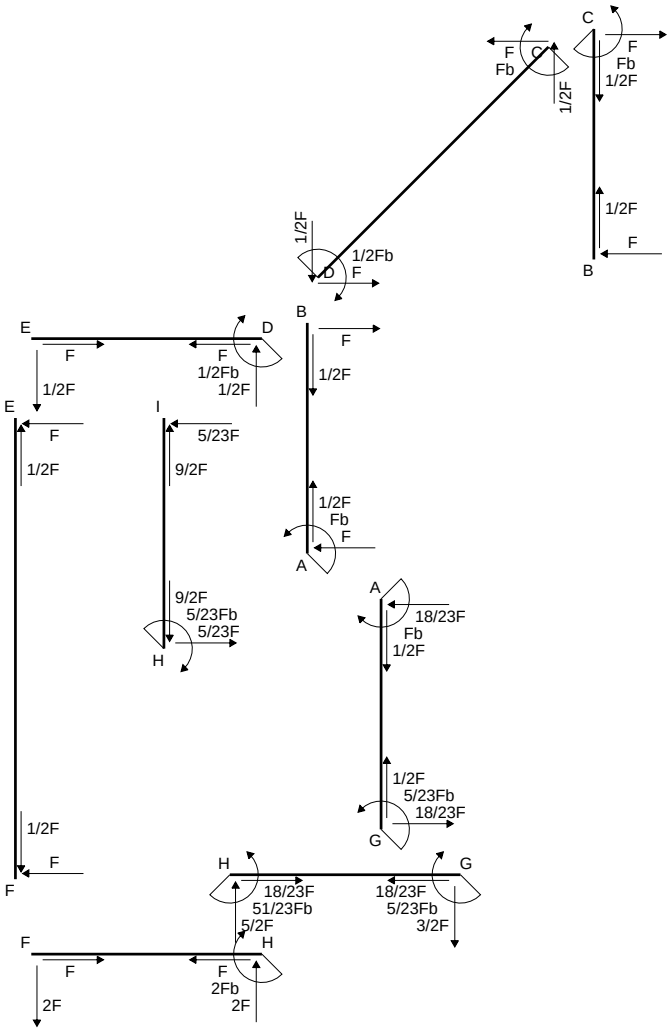
C
F
Fb
C
F
1/2F
F
Fb
1/2F
1/2F
1/2F
F
B
1/2F
1/2Fb
F
D
E
F
D
F
1/2Fb
1/2F
B
F
1/2F
E
F
1/2F
I
5/23F
9/2F
1/2F
Fb
F
A
9/2F
5/23Fb
5/23F
H
A
18/23F
Fb
1/2F
1/2F
5/23Fb
18/23F
G
1/2F
F
F
H
18/23F
51/23Fb
5/2F
H
G
18/23F
5/23Fb
3/2F
F
F
F
2Fb
2F
2F

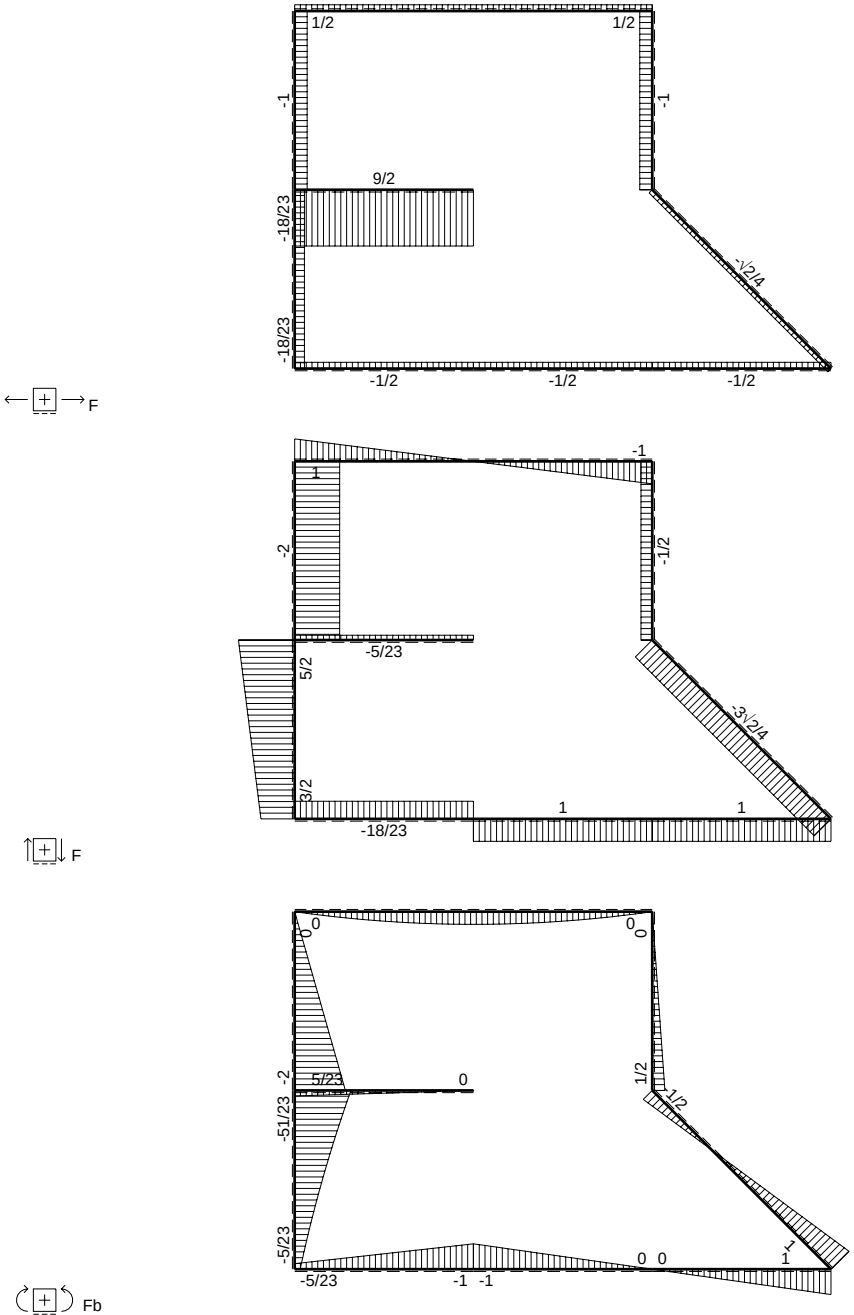
F
1/2
1/2
-1
-1
9/2
-18/23
-1/2
-18/23
-1/2
-1/2
-1/2
F
-1
1
-2
-1/2
-5/23
5/2
-3/2
3/2
1
1
-18/23
F
0
0
0
0
-2
5/23
0
1/2
1/2
-51/23
-5/23
0 0
1
1
-5/23
-1 -1
Fb

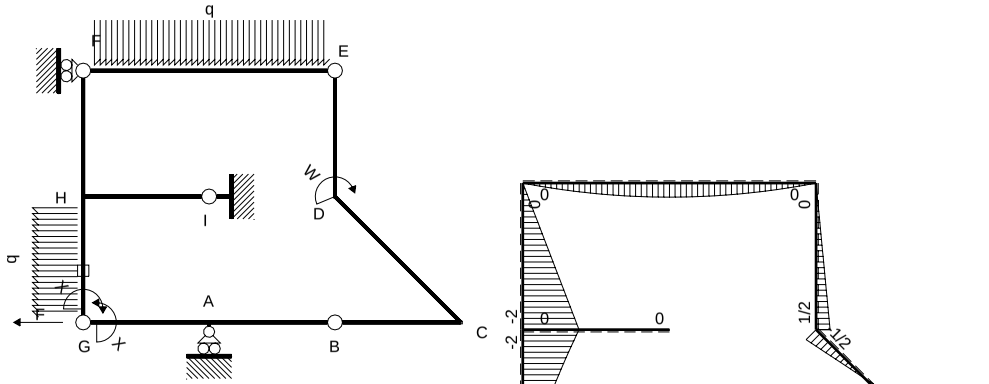

M_0 flessione da carichi assegnati

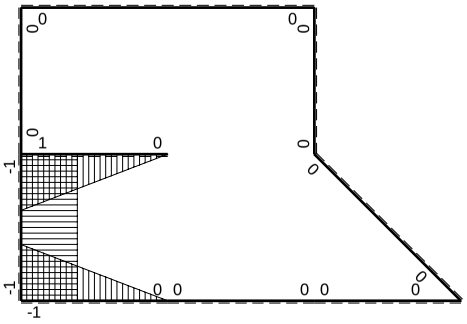

M_x flessione da iperstatica X=1

Quadro contributi PLV per iperstatica $X=W_{GA}$

→	$M_x(x)$	$M_0(x)$	M_xM_0	M_xM_x	$\int M_xM_0/EJdx$	$\int XM_xM_x/EJdx$
AB b	0	-Fb+Fx	0	0	0	0
BA b	0	Fx	0	0		
BC b	0	Fx	0	0	0	0
CB b	0	-Fb+Fx	0	0		
CD √2b	0	Fb-3√2/4Fx	0	0	0	0
DE b	0	1/2Fb-1/2Fx	0	0	0	0
ED b	0	-1/2Fx	0	0		
EF 2b	0	$-Fx+1/2qx^2$	0	0	0	0
FE 2b	0	$Fx-1/2qx^2$	0	0		
GA b	-1+x/b	-Fx	$Fx-Fx^2/b$	$1-2x/b+x^2/b^2$	$1/6Fb^2/EJ$	1/3Xb/EJ
AG b	x/b	Fb-Fx	$Fx-Fx^2/b$	x^2/b^2		
FH b	0	-2Fx	0	0	0	0
HF b	0	2Fb-2Fx	0	0		
HI b	1-x/b	0	0	$1-2x/b+x^2/b^2$	0	1/3Xb/EJ
IH b	-x/b	0	0	x^2/b^2		
HG b	-1	$-2Fb+5/2Fx-1/2qx^2$	$2Fb-5/2Fx+1/2Fx^2/b$	1	$11/12Fb^2/EJ$	Xb/EJ
GH b	1	$3/2Fx+1/2qx^2$	$3/2Fx+1/2Fx^2/b$	1		
HG	elongazione asta $N_{1HG}\varepsilon_{HG}L_{HG}$				$-Fb^2/EJ$	
A	molla nodo $-V_{1A}(V_{0A}+XV_{1A})/k_A$				$-1/2Fb^2/EJ$	1/4Xb/EJ
	totali				$-5/12Fb^2/EJ$	23/12Xb/EJ
	iperstatica $X=W_{GA}$				5/23Fb	

Sviluppi di calcolo iperstatica

$L^{XX}_{GA} = \int_o^b (1 - 2\,x/b + x^2/b^2)\ 1/EJ\ dx = [\,x - x^2/b + 1/3\,x^3/b^2\,]_o^b\ 1/EJ$

$= (\,b - b + 1/3\,b\,)\ 1/EJ = 1/3\ b/EJ$

$L^{XX}_{AG} = \int_o^b (\,x^2/b^2\,)\ 1/EJ\ dx = [1/3\,x^3/b^2\,]_o^b\ 1/EJ$

$= (1/3\,b\,)\ 1/EJ = 1/3\ b/EJ$

$L^{XX}_{HI} = \int_o^b (1 - 2\,x/b + x^2/b^2)\ 1/EJ\ dx = [\,x - x^2/b + 1/3\,x^3/b^2\,]_o^b\ 1/EJ$

$= (\,b - b + 1/3\,b\,)\ 1/EJ = 1/3\ b/EJ$

$L^{XX}_{IH} = \int_o^b (\,x^2/b^2\,)\ 1/EJ\ dx = [1/3\,x^3/b^2\,]_o^b\ 1/EJ$

$= (1/3\,b\,)\ 1/EJ = 1/3\ b/EJ$

$L^{XX}_{HG} = \int_o^b (1)\ 1/EJ\ dx = [\,x\,]_o^b\ 1/EJ$

$= (\,b\,)\ 1/EJ = b/EJ$

$L^{XX}_{GH} = \int_o^b (1)\ 1/EJ\ dx = [\,x\,]_o^b\ 1/EJ$

$= (\,b\,)\ 1/EJ = b/EJ$

$L^{Xo}_{GA} = \int_o^b (\,x/b - x^2/b^2\,)\ Fb\ 1/EJ\ dx = [1/2\,x^2/b - 1/3\,x^3/b^2\,]_o^b\ Fb\ 1/EJ$

$= (1/2\,b - 1/3\,b\,)\ Fb\ 1/EJ = 1/6\ Fb^2/EJ$

$L^{Xo}_{AG} = \int_o^b (\,x/b - x^2/b^2\,)\ Fb\ 1/EJ\ dx = [1/2\,x^2/b - 1/3\,x^3/b^2\,]_o^b\ Fb\ 1/EJ$

$= (1/2\,b - 1/3\,b\,)\ Fb\ 1/EJ = 1/6\ Fb^2/EJ$

$L^{Xo}_{HG} = \int_o^b (2 - 5/2\,x/b + 1/2\,x^2/b^2\,)\ Fb\ 1/EJ\ dx - 1\ \ (-1)\ \ (-1)\ \ Fb^2/EJ$

$= [\,2\,x - 5/4\,x^2/b + 1/6\,x^3/b^2\,]_o^b\ Fb\ 1/EJ\ - 1\ \ (-1)\ \ (-1)\ \ Fb^2/EJ$

$= (\,2\,b - 5/4\,b + 1/6\,b\,)\ Fb\ 1/EJ\ - 1\ \ (-1)\ \ (-1)\ \ Fb^2/EJ = -1/12\ \ Fb^2/EJ$

$L^{Xo}_{GH} = \int_o^b (3/2\,x/b + 1/2\,x^2/b^2\,)\ Fb\ 1/EJ\ dx - 1\ \ (-1)\ \ (-1)\ \ Fb^2/EJ$

$= [\,3/4\,x^2/b + 1/6\,x^3/b^2\,]_o^b\ Fb\ 1/EJ\ - 1\ \ (-1)\ \ (-1)\ \ Fb^2/EJ$

$= (\,3/4\,b + 1/6\,b\,)\ Fb\ 1/EJ\ - 1\ \ (-1)\ \ (-1)\ \ Fb^2/EJ = -1/12\ \ Fb^2/EJ$

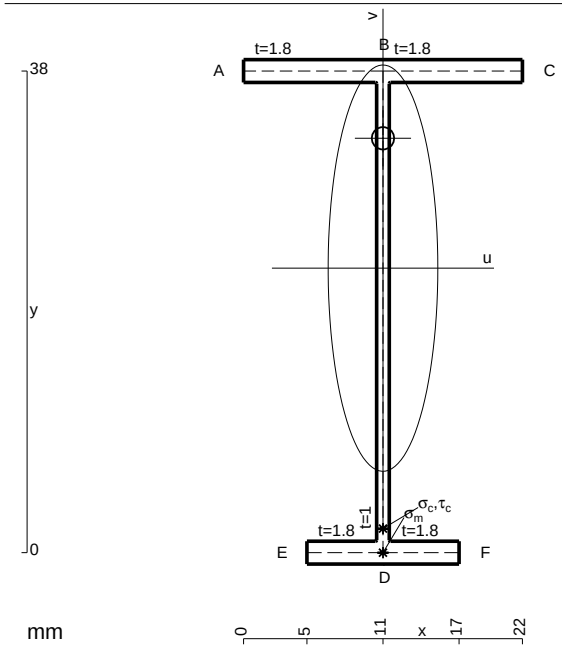

A = 99.2 mm^2
J_u = 25487. mm^4
J_v = 1856. mm^4
J_t = 78.76 mm^4
y_o = 10.25 mm
y_g = 22.45 mm
N = -220. N
T_y = -440. N
M_x = -250800. Nmm
x_m = 11. mm
v_m = -22.45 mm
$\sigma_m = N/A - Mv/J_u$ = -223.1 N/mm^2
y_c = 3. mm
u_c = -11. mm
v_c = -19.45 mm
$\sigma_c = N/A - Mv/J_u$ = -223.1 N/mm^2
$\tau_c = TS^*/tJ_u$ = 8.371 N/mm^2
$\tau_g = TS^*/tJ_u$ = 8.371 N/mm^2
t_c = 220. mm
$\sigma_o = \sqrt{\sigma^2 + 3\tau^2}$ = 223.6 N/mm^2

ESΣ05.xxxx.188

@ Adolfo Zavelani Rossi, Politecnico di Milano, vers.27.03.13 01.12.25

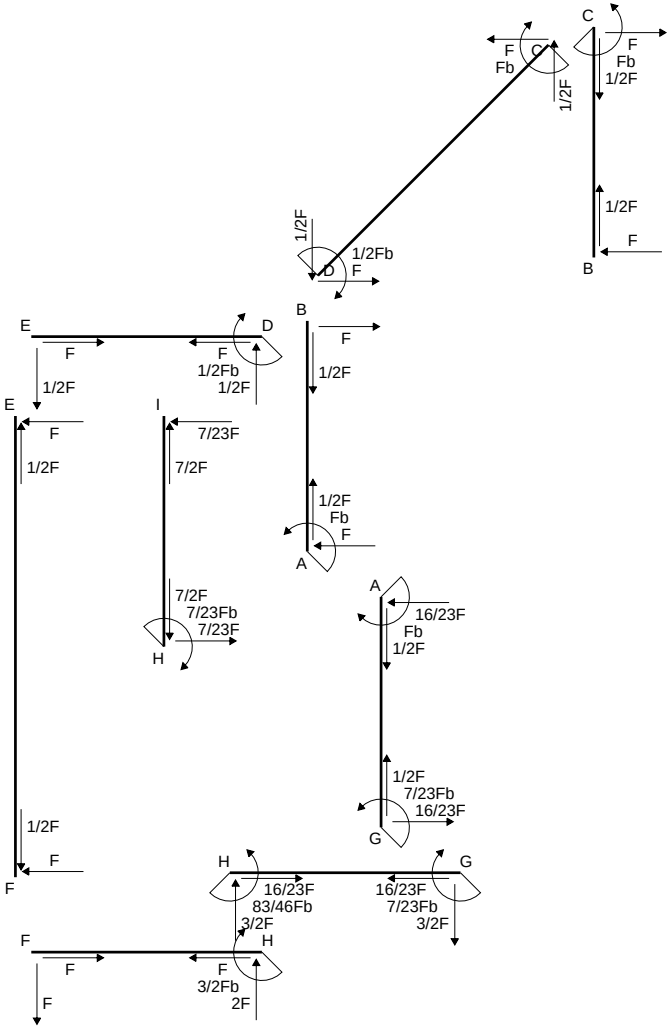
C
F
Fb
C
1/2F
F
Fb
1/2F
1/2F
F
B
1/2F
1/2Fb
D
F
E
D
F
F
1/2Fb
1/2F
B
F
1/2F
E
F
1/2F
I
7/23F
7/2F
1/2F
Fb
F
A
7/2F
7/23Fb
7/23F
H
A
16/23F
Fb
1/2F
1/2F
7/23Fb
16/23F
G
1/2F
F
F
H
G
16/23F
83/46Fb
3/2F
16/23F
7/23Fb
3/2F
F
H
F
F
3/2Fb
2F
F

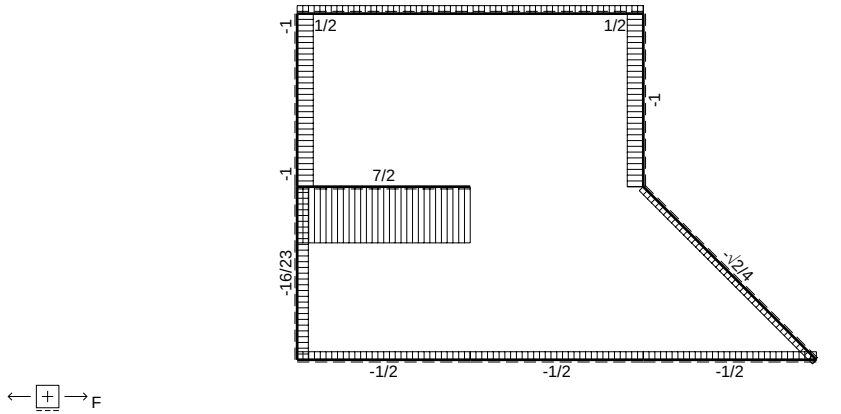
F
-1
1/2
1/2
-1
-1
7/2
-16/23
-√2/4
-1/2
-1/2
-1/2

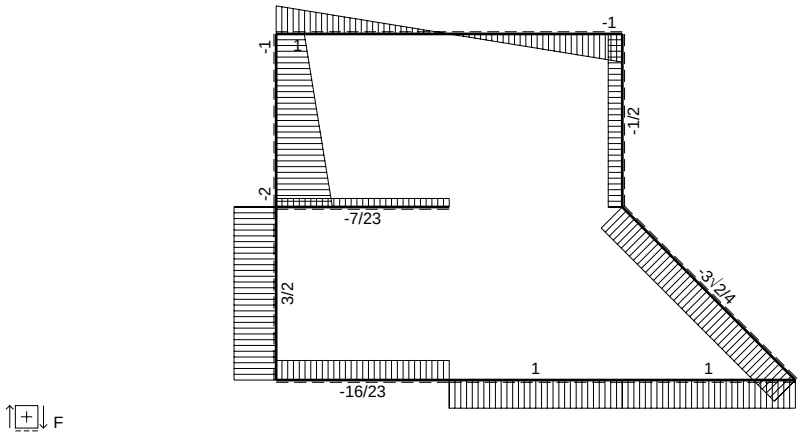
F
-1
-1
1
-1/2
-2
-7/23
3/2
-3√2/4
1
1
-16/23

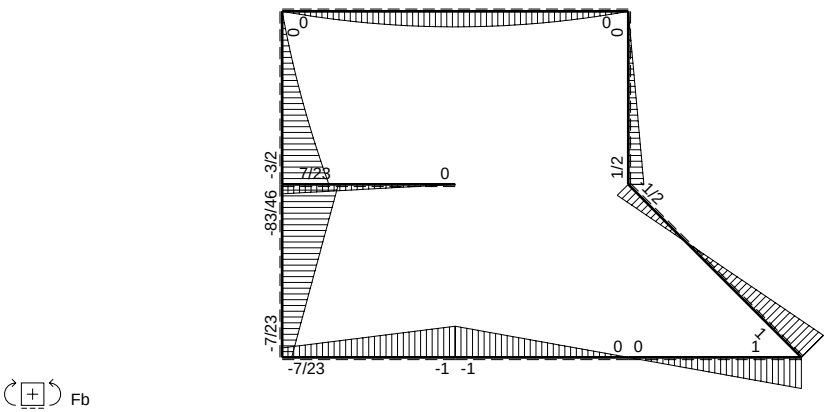
Fb
0
0
0
-3/2
7/23
0
1/2
1/2
-83/46
-7/23
0 0
-1
1
-7/23
-1 -1

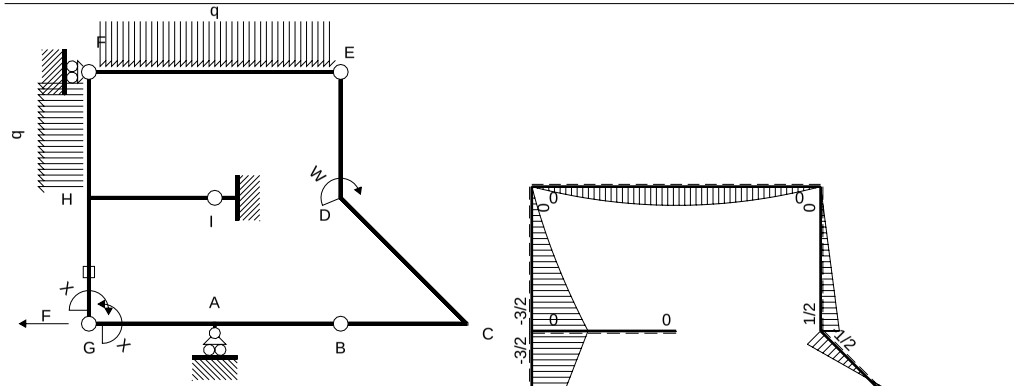

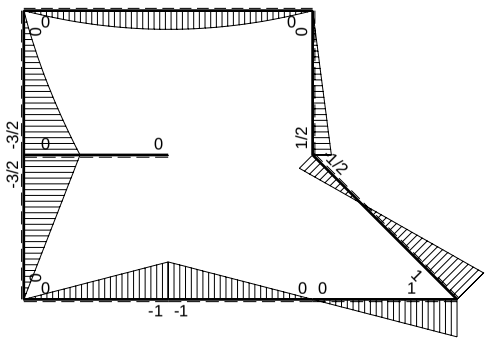

M_0 flessione da carichi assegnati

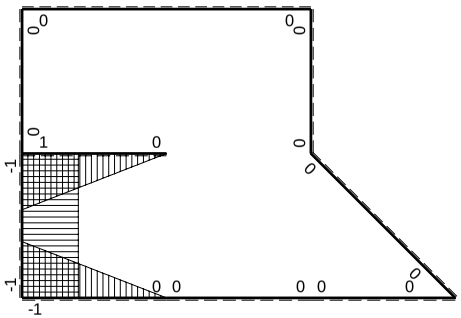

M_x flessione da iperstatica X=1

Quadro contributi PLV per iperstatica $X=W_{GA}$

→	$M_x(x)$	$M_0(x)$	M_xM_0	M_xM_x	$\int M_xM_0/EJdx$	$\int XM_xM_x/EJdx$
AB b	0	-Fb+Fx	0	0	0	0
BA b	0	Fx	0	0		
BC b	0	Fx	0	0	0	0
CB b	0	-Fb+Fx	0	0		
CD √2b	0	Fb-3√2/4Fx	0	0	0	0
DE b	0	1/2Fb-1/2Fx	0	0	0	0
ED b	0	-1/2Fx	0	0		
EF 2b	0	$-Fx+1/2qx^2$	0	0	0	0
FE 2b	0	$Fx-1/2qx^2$	0	0		
GA b	-1+x/b	-Fx	$Fx-Fx^2/b$	$1-2x/b+x^2/b^2$	$1/6Fb^2/EJ$	1/3Xb/EJ
AG b	x/b	Fb-Fx	$Fx-Fx^2/b$	x^2/b^2		
FH b	0	$-Fx-1/2qx^2$	0	0	0	0
HF b	0	$3/2Fb-2Fx+1/2qx^2$	0	0		
HI b	1-x/b	0	0	$1-2x/b+x^2/b^2$	0	1/3Xb/EJ
IH b	-x/b	0	0	x^2/b^2		
HG b	-1	-3/2Fb+3/2Fx	3/2Fb-3/2Fx	1	$3/4Fb^2/EJ$	Xb/EJ
GH b	1	3/2Fx	3/2Fx	1		
HG	elongazione asta $N_{1HG}\varepsilon_{HG}L_{HG}$				$-Fb^2/EJ$	
A	molla nodo $-V_{1A}(V_{0A}+XV_{1A})/k_A$				$-1/2Fb^2/EJ$	1/4Xb/EJ
	totali				$-7/12Fb^2/EJ$	23/12Xb/EJ
	iperstatica $X=W_{GA}$				7/23Fb	

Sviluppi di calcolo iperstatica

$L^{XX}_{GA} = \int_o^b (1 - 2\,x/b + x^2/b^2)\ 1/EJ\ dx = [\,x - x^2/b + 1/3\,x^3/b^2\,]_o^b\ 1/EJ$

$= (\,b - b + 1/3\,b\,)\ 1/EJ = 1/3\ b/EJ$

$L^{XX}_{AG} = \int_o^b (\,x^2/b^2\,)\ 1/EJ\ dx = [1/3\,x^3/b^2\,]_o^b\ 1/EJ$

$= (1/3\,b\,)\ 1/EJ = 1/3\ b/EJ$

$L^{XX}_{HI} = \int_o^b (1 - 2\,x/b + x^2/b^2)\ 1/EJ\ dx = [\,x - x^2/b + 1/3\,x^3/b^2\,]_o^b\ 1/EJ$

$= (\,b - b + 1/3\,b\,)\ 1/EJ = 1/3\ b/EJ$

$L^{XX}_{IH} = \int_o^b (\,x^2/b^2\,)\ 1/EJ\ dx = [1/3\,x^3/b^2\,]_o^b\ 1/EJ$

$= (1/3\,b\,)\ 1/EJ = 1/3\ b/EJ$

$L^{XX}_{HG} = \int_o^b (1)\ 1/EJ\ dx = [\,x\,]_o^b\ 1/EJ$

$= (\,b\,)\ 1/EJ = b/EJ$

$L^{XX}_{GH} = \int_o^b (1)\ 1/EJ\ dx = [\,x\,]_o^b\ 1/EJ$

$= (\,b\,)\ 1/EJ = b/EJ$

$L^{Xo}_{GA} = \int_o^b (\,x/b - x^2/b^2\,)\ Fb\ 1/EJ\ dx = [1/2\,x^2/b - 1/3\,x^3/b^2\,]_o^b\ Fb\ 1/EJ$

$= (1/2\,b - 1/3\,b\,)\ Fb\ 1/EJ = 1/6\ Fb^2/EJ$

$L^{Xo}_{AG} = \int_o^b (\,x/b - x^2/b^2\,)\ Fb\ 1/EJ\ dx = [1/2\,x^2/b - 1/3\,x^3/b^2\,]_o^b\ Fb\ 1/EJ$

$= (1/2\,b - 1/3\,b\,)\ Fb\ 1/EJ = 1/6\ Fb^2/EJ$

$L^{Xo}_{HG} = \int_o^b (3/2 - 3/2\,x/b\,)\ Fb\ 1/EJ\ dx - 1\ \ (-1)\ \ (-1)\ \ Fb^2/EJ$

$= [3/2\,x - 3/4\,x^2/b\,]_o^b\ Fb\ 1/EJ\ -\ 1\ \ (-1)\ \ (-1)\ \ Fb^2/EJ$

$= (3/2\,b - 3/4\,b\,)\ Fb\ 1/EJ\ -\ 1\ \ (-1)\ \ (-1)\ \ Fb^2/EJ = -1/4\ \ Fb^2/EJ$

$L^{Xo}_{GH} = \int_o^b (3/2\,x/b\,)\ Fb\ 1/EJ\ dx - 1\ \ (-1)\ \ (-1)\ \ Fb^2/EJ = [3/4\,x^2/b\,]_o^b\ Fb\ 1/EJ\ -\ 1\ \ (-1)\ \ (-1)\ \ Fb^2/EJ$

$= (3/4\,b\,)\ Fb\ 1/EJ\ -\ 1\ \ (-1)\ \ (-1)\ \ Fb^2/EJ = -1/4\ \ Fb^2/EJ$

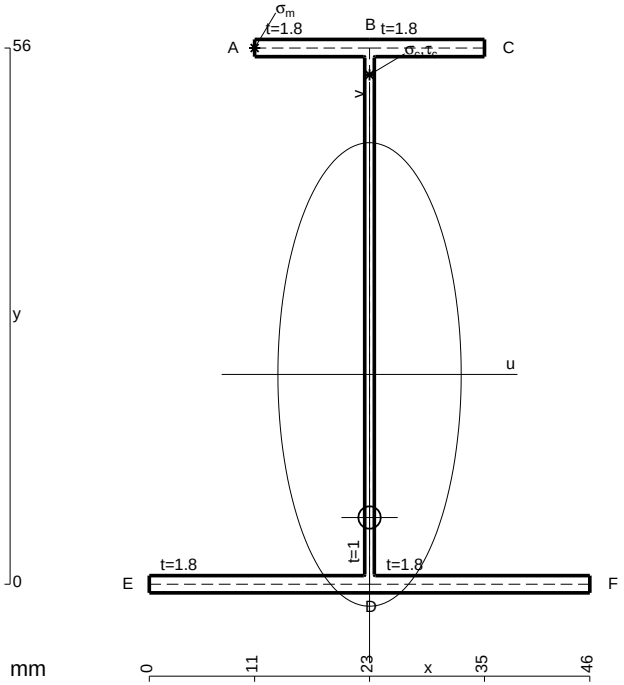

A = 182. mm^2
J_u = 106664. mm^4
J_v = 16674. mm^4
J_t = 154.7 mm^4
y_o = -14.94 mm
y_g = 21.91 mm
N = -550. N
T_y = -1100. N
M_x = -750750. Nmm
x_m = 11. mm
y_m = 56. mm
u_m = -12. mm
v_m = 34.09 mm
$\sigma_m = N/A - Mv/J_u$ = 236.9 N/mm^2
x_c = 23. mm
y_c = 56. mm
v_c = 34.09 mm
$\sigma_c = N/A - Mv/J_u$ = 236.9 N/mm^2
$\tau_c = TS^*/tJ_u$ = 15.19 N/mm^2
$\tau_g = TS^*/tJ_u$ = 15.19 N/mm^2
t_c = 550. mm
$\sigma_o = \sqrt{\sigma^2 + 3\tau^2}$ = 238.4 N/mm^2

ESΣ05.xxxx.189

@ Adolfo Zavelani Rossi, Politecnico di Milano, vers.27.03.13 01.12.25

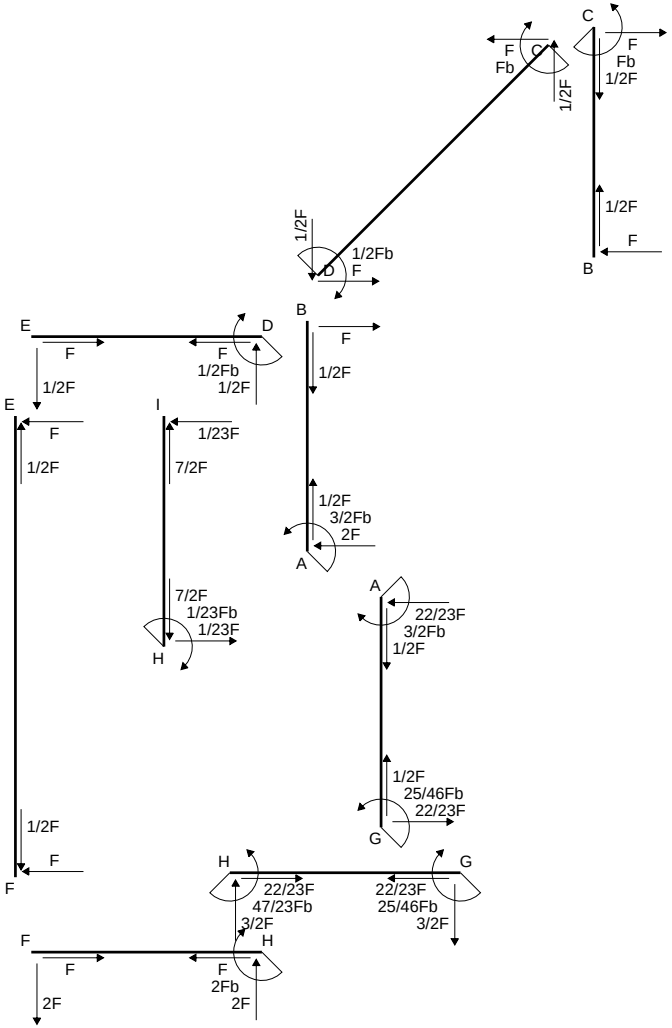
C
F
Fb
C
F
Fb
1/2F
1/2F
1/2F
F
B
1/2F
1/2Fb
D
F
E
D
F
F
1/2Fb
1/2F
B
F
1/2F
E
F
1/2F
I
1/23F
7/2F
1/2F
3/2Fb
2F
A
7/2F
1/23Fb
1/23F
H
A
22/23F
3/2Fb
1/2F
1/2F
25/46Fb
22/23F
G
1/2F
F
F
H
22/23F
47/23Fb
3/2F
H
G
22/23F
25/46Fb
3/2F
F
F
F
2Fb
2F
2F

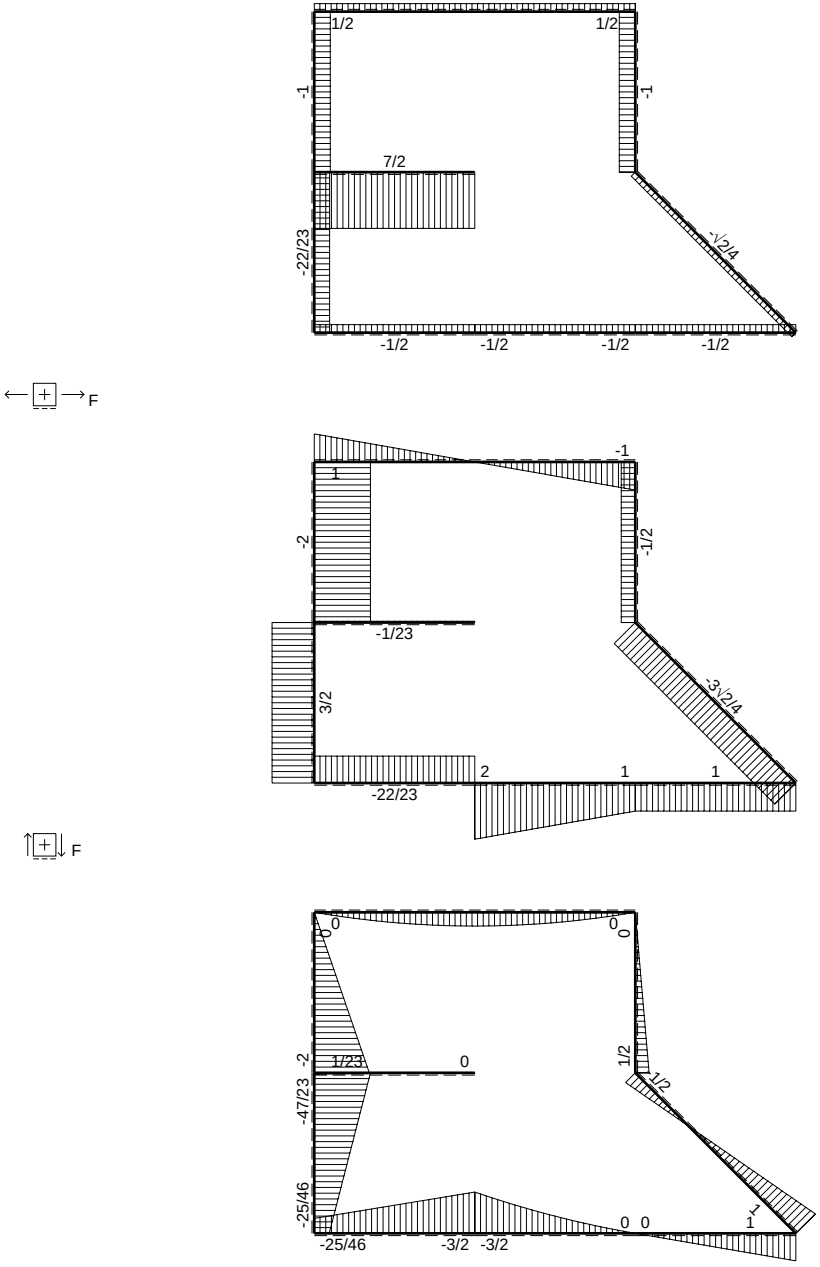
F
1/2
1/2
-1
-1
7/2
-22/23
-1/2
-1/2
-1/2
-1/2
F
-1
1
-2
-1/2
-1/23
3/2
-3/2
2
1
1
-22/23
F
0
0
0
0
-2
1/23
0
1/2
1/2
-47/23
-25/46
0 0
1
-25/46
-3/2
-3/2
Fb

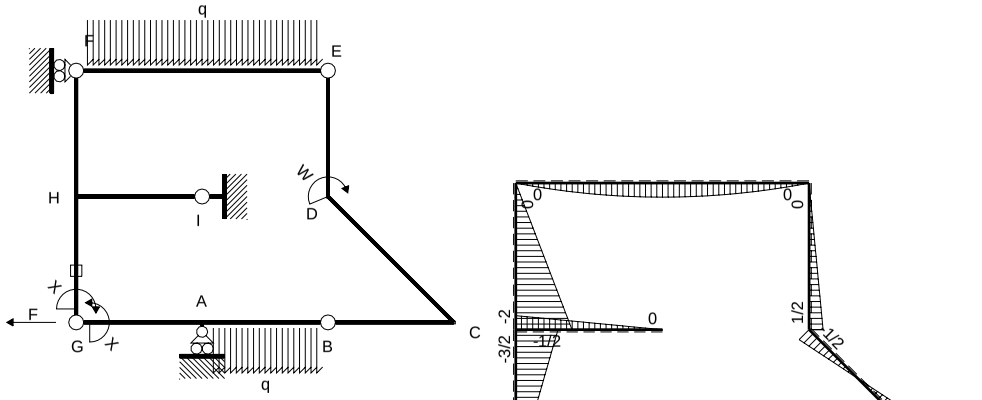

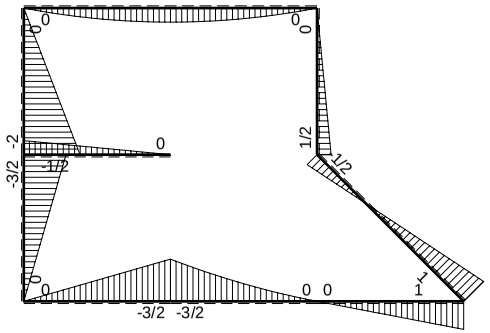

M_0 flessione da carichi assegnati

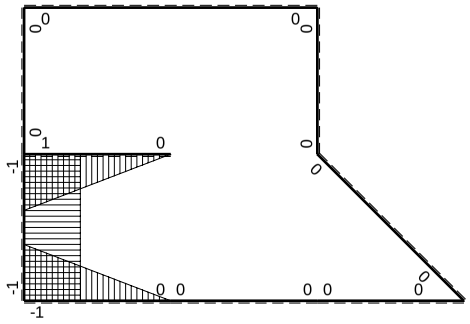

M_x flessione da iperstatica X=1

Quadro contributi PLV per iperstatica $X=W_{GA}$

→	$M_x(x)$	$M_0(x)$	M_xM_0	M_xM_x	$\int M_xM_0/EJdx$	$\int XM_xM_x/EJdx$
AB b	0	$-3/2Fb+2Fx-1/2qx^2$	0	0	0	0
BA b	0	$Fx+1/2qx^2$	0	0		
BC b	0	Fx	0	0	0	0
CB b	0	-Fb+Fx	0	0		
CD $\sqrt{2}$b	0	Fb-3$\sqrt{2}$/4Fx	0	0	0	0
DE b	0	1/2Fb-1/2Fx	0	0	0	0
ED b	0	-1/2Fx	0	0		
EF 2b	0	$-Fx+1/2qx^2$	0	0	0	0
FE 2b	0	$Fx-1/2qx^2$	0	0		
GA b	-1+x/b	-3/2Fx	$3/2Fx-3/2Fx^2/b$	$1-2x/b+x^2/b^2$	$1/4Fb^2/EJ$	1/3Xb/EJ
AG b	x/b	3/2Fb-3/2Fx	$3/2Fx-3/2Fx^2/b$	x^2/b^2		
FH b	0	-2Fx	0	0	0	0
HF b	0	2Fb-2Fx	0	0		
HI b	1-x/b	-1/2Fb+1/2Fx	$-1/2Fb+Fx-1/2Fx^2/b$	$1-2x/b+x^2/b^2$	$-1/6Fb^2/EJ$	1/3Xb/EJ
IH b	-x/b	1/2Fx	$-1/2Fx^2/b$	x^2/b^2		
HG b	-1	-3/2Fb+3/2Fx	3/2Fb-3/2Fx	1	$3/4Fb^2/EJ$	Xb/EJ
GH b	1	3/2Fx	3/2Fx	1		
HG	elongazione asta $N_{1HG}\varepsilon_{HG}L_{HG}$				$-Fb^2/EJ$	
A	molla nodo $-V_{1A}(V_{0A}+XV_{1A})/k_A$				$-7/8Fb^2/EJ$	1/4Xb/EJ
	totali				$-25/24Fb^2/EJ$	23/12Xb/EJ
	iperstatica $X=W_{GA}$				25/46Fb	

Sviluppi di calcolo iperstatica

$L^{XX}_{GA} = \int_o^b (1 - 2\,x/b + x^2/b^2)\ 1/EJ\ dx = [\,x - x^2/b + 1/3\,x^3/b^2\,]_o^b\ 1/EJ$

$= (\,b - b + 1/3\,b\,)\ 1/EJ = 1/3\ b/EJ$

$L^{XX}_{AG} = \int_o^b (\,x^2/b^2\,)\ 1/EJ\ dx = [1/3\,x^3/b^2\,]_o^b\ 1/EJ$

$= (1/3\,b\,)\ 1/EJ = 1/3\ b/EJ$

$L^{XX}_{HI} = \int_o^b (1 - 2\,x/b + x^2/b^2)\ 1/EJ\ dx = [\,x - x^2/b + 1/3\,x^3/b^2\,]_o^b\ 1/EJ$

$= (\,b - b + 1/3\,b\,)\ 1/EJ = 1/3\ b/EJ$

$L^{XX}_{IH} = \int_o^b (\,x^2/b^2\,)\ 1/EJ\ dx = [1/3\,x^3/b^2\,]_o^b\ 1/EJ$

$= (1/3\,b\,)\ 1/EJ = 1/3\ b/EJ$

$L^{XX}_{HG} = \int_o^b (1)\ 1/EJ\ dx = [\,x\,]_o^b\ 1/EJ$

$= (\,b\,)\ 1/EJ = b/EJ$

$L^{XX}_{GH} = \int_o^b (1)\ 1/EJ\ dx = [\,x\,]_o^b\ 1/EJ$

$= (\,b\,)\ 1/EJ = b/EJ$

$L^{Xo}_{GA} = \int_o^b (3/2\,x/b - 3/2\,x^2/b^2)\ Fb\ 1/EJ\ dx = [3/4\,x^2/b - 1/2\,x^3/b^2\,]_o^b\ Fb\ 1/EJ$

$= (3/4\,b - 1/2\,b\,)\ Fb\ 1/EJ = 1/4\ Fb^2/EJ$

$L^{Xo}_{AG} = \int_o^b (3/2\,x/b - 3/2\,x^2/b^2\,)\ Fb\ 1/EJ\ dx = [3/4\,x^2/b - 1/2\,x^3/b^2\,]_o^b\ Fb\ 1/EJ$

$= (3/4\,b - 1/2\,b\,)\ Fb\ 1/EJ = 1/4\ Fb^2/EJ$

$L^{Xo}_{HI} = \int_o^b (-1/2 + x/b - 1/2\,x^2/b^2\,)\ Fb\ 1/EJ\ dx = [-1/2\,x + 1/2\,x^2/b - 1/6\,x^3/b^2\,]_o^b\ Fb\ 1/EJ$

$= (-1/2\,b + 1/2\,b - 1/6\,b\,)\ Fb\ 1/EJ = -1/6\ Fb^2/EJ$

$L^{Xo}_{IH} = \int_o^b (-1/2\,x^2/b^2\,)\ Fb\ 1/EJ\ dx = [-1/6\,x^3/b^2\,]_o^b\ Fb\ 1/EJ$

$= (-1/6\,b\,)\ Fb\ 1/EJ = -1/6\ Fb^2/EJ$

$L^{Xo}_{HG} = \int_o^b (3/2 - 3/2\,x/b\,)\ Fb\ 1/EJ\ dx - 1\ \ (-1)\ \ (-1)\ \ Fb^2/EJ$

$= [3/2\,x - 3/4\,x^2/b\,]_o^b\ Fb\ 1/EJ\ -\ 1\ \ (-1)\ \ (-1)\ \ Fb^2/EJ$

$= (3/2\,b - 3/4\,b\,)\ Fb\ 1/EJ\ -\ 1\ \ (-1)\ \ (-1)\ \ Fb^2/EJ = -1/4\ Fb^2/EJ$

$L^{Xo}_{GH} = \int_o^b (3/2\,x/b\,)\ Fb\ 1/EJ\ dx - 1\ \ (-1)\ \ (-1)\ \ Fb^2/EJ = [3/4\,x^2/b\,]_o^b\ Fb\ 1/EJ\ -\ 1\ \ (-1)\ \ (-1)\ \ Fb^2/EJ$

$= (3/4\,b\,)\ Fb\ 1/EJ\ -\ 1\ \ (-1)\ \ (-1)\ \ Fb^2/EJ = -1/4\ Fb^2/EJ$

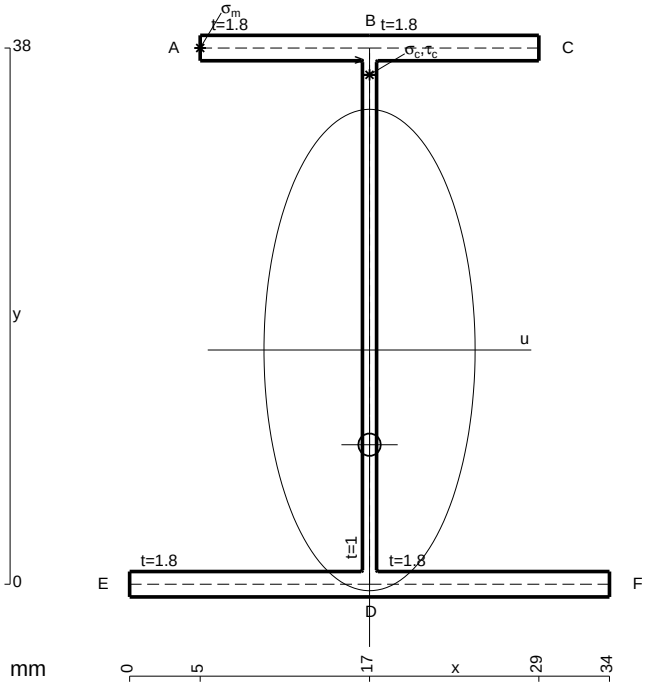

A = 142.4 mm^2
J_u = 41440. mm^4
J_v = 7969. mm^4
J_t = 125.4 mm^4
y_o = -6.711 mm
y_g = 16.6 mm
N = -610. N
T_y = -1220. N
M_x = -390400. Nmm
x_m = 5. mm
y_m = 38. mm
u_m = -12. mm
v_m = 21.4 mm
$\sigma_m = N/A - Mv/J_u$ = 197.3 N/mm^2
x_c = 17. mm
y_c = 38. mm
v_c = 21.4 mm
$\sigma_c = N/A - Mv/J_u$ = 197.3 N/mm^2
$\tau_c = TS^*/tJ_u$ = 27.22 N/mm^2
$\tau_g = TS^*/tJ_u$ = 27.22 N/mm^2
t_c = 610. mm
$\sigma_o = \sqrt{\sigma^2 + 3\tau^2}$ = 202.9 N/mm^2

ESΣ05.xxxx.190

@ Adolfo Zavelani Rossi, Politecnico di Milano, vers.27.03.13 01.12.25

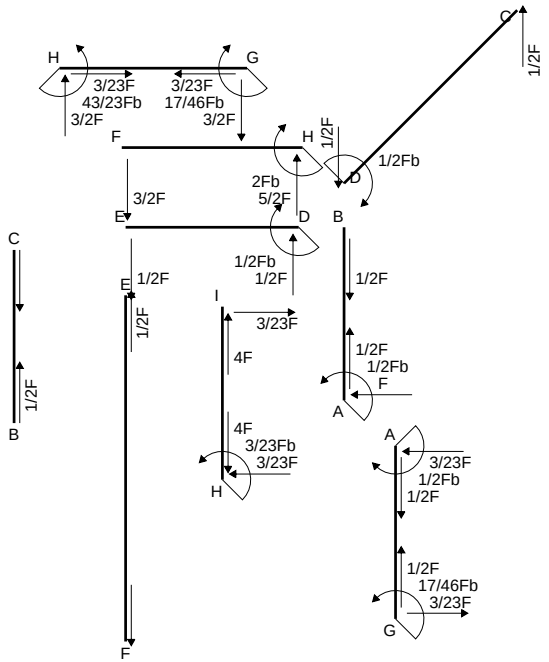
H
G
3/23F
43/23Fb
3/2F
3/23F
17/46Fb
3/2F
C
1/2F
F
H
1/2F
1/2Fb
D
2Fb
5/2F
3/2F
E
D
B
C
1/2Fb
1/2F
1/2F
E
1/2F
1/2F
I
3/23F
4F
1/2F
1/2Fb
F
A
B
1/2F
4F
3/23Fb
3/23F
H
A
3/23F
1/2Fb
1/2F
1/2F
17/46Fb
3/23F
G
F

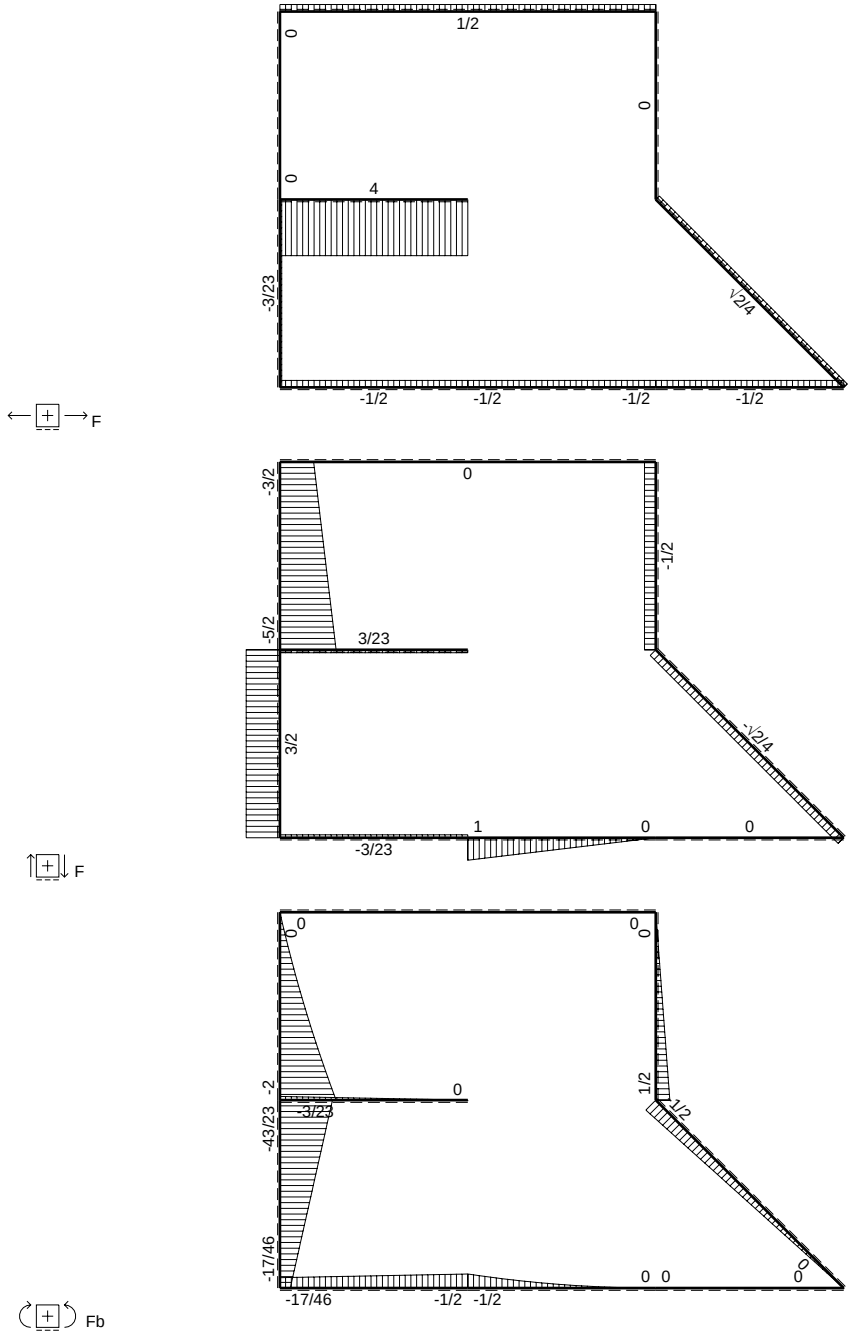
F
1/2
0
0
0
4
-3/23
√2/4
-1/2
-1/2
-1/2
-1/2
F
-3/2
0
-1/2
-5/2
3/23
3/2
-√2/4
1
0
0
-3/23
Fb
0
0
0
0
-2
0
1/2
-43/23
3/23
-1/2
-17/46
0 0
0
-17/46
-1/2 -1/2

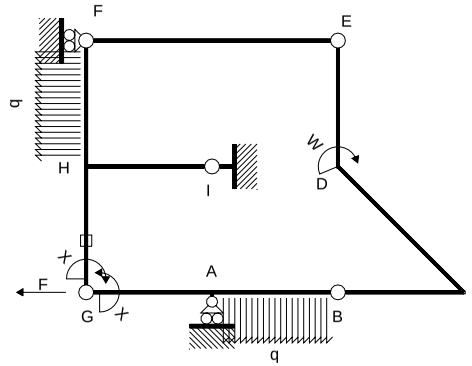

Schema di calcolo iperstatico

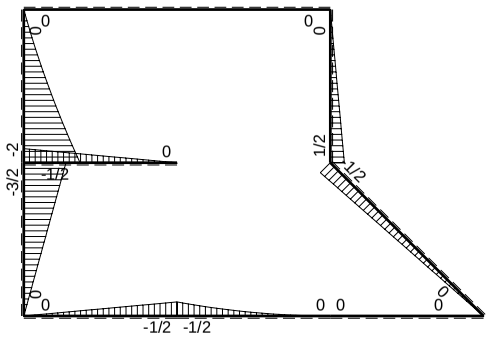

M_0 flessione da carichi assegnati

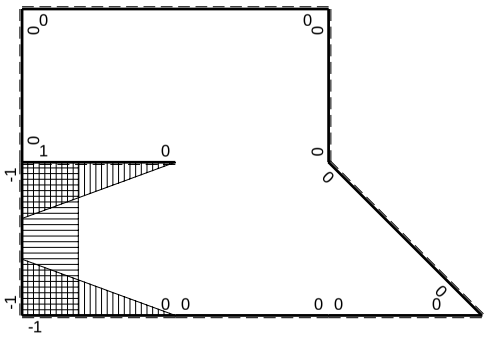

M_x flessione da iperstatica X=1

Quadro contributi PLV per iperstatica $X=W_{GA}$

→	$M_x(x)$	$M_0(x)$	M_xM_0	M_xM_x	$\int M_xM_0/EJdx$	$\int XM_xM_x/EJdx$
AB b	0	$-1/2Fb+Fx-1/2qx^2$	0	0	0	0
BA b	0	$1/2qx^2$	0	0		
BC b	0	0	0	0	0	0
CB b	0	0	0	0		
CD $\sqrt{2}b$	0	$-\sqrt{2}/4Fx$	0	0	0	0
DE b	0	$1/2Fb-1/2Fx$	0	0	0	0
ED b	0	$-1/2Fx$	0	0		
EF 2b	0	0	0	0	0	0
FE 2b	0	0	0	0		
GA b	$-1+x/b$	$-1/2Fx$	$1/2Fx-1/2Fx^2/b$	$1-2x/b+x^2/b^2$	$1/12Fb^2/EJ$	$1/3Xb/EJ$
AG b	x/b	$1/2Fb-1/2Fx$	$1/2Fx-1/2Fx^2/b$	x^2/b^2		
FH b	0	$-3/2Fx-1/2qx^2$	0	0	0	0
HF b	0	$2Fb-5/2Fx+1/2qx^2$	0	0		
HI b	$1-x/b$	$-1/2Fb+1/2Fx$	$-1/2Fb+Fx-1/2Fx^2/b$	$1-2x/b+x^2/b^2$	$-1/6Fb^2/EJ$	$1/3Xb/EJ$
IH b	$-x/b$	$1/2Fx$	$-1/2Fx^2/b$	x^2/b^2		
HG b	-1	$-3/2Fb+3/2Fx$	$3/2Fb-3/2Fx$	1	$3/4Fb^2/EJ$	Xb/EJ
GH b	1	$3/2Fx$	$3/2Fx$	1		
HG	elongazione asta $N_{1HG}\varepsilon_{HG}L_{HG}$				$-Fb^2/EJ$	
A	molla nodo $-V_{1A}(V_{0A}+XV_{1A})/k_A$				$-3/8Fb^2/EJ$	$1/4Xb/EJ$
	totali				$-17/24Fb^2/EJ$	$23/12Xb/EJ$
	iperstatica $X=W_{GA}$				$17/46Fb$	

Sviluppi di calcolo iperstatica

$L^{XX}_{GA} = \int_o^b (1 - 2\,x/b + x^2/b^2)\ 1/EJ\ dx = [\,x - x^2/b + 1/3\,x^3/b^2\,]_o^b\ 1/EJ$

$= (\,b - b + 1/3\,b\,)\ 1/EJ = 1/3\ b/EJ$

$L^{XX}_{AG} = \int_o^b (\,x^2/b^2\,)\ 1/EJ\ dx = [1/3\,x^3/b^2\,]_o^b\ 1/EJ$

$= (1/3\,b\,)\ 1/EJ = 1/3\ b/EJ$

$L^{XX}_{HI} = \int_o^b (1 - 2\,x/b + x^2/b^2)\ 1/EJ\ dx = [\,x - x^2/b + 1/3\,x^3/b^2\,]_o^b\ 1/EJ$

$= (\,b - b + 1/3\,b\,)\ 1/EJ = 1/3\ b/EJ$

$L^{XX}_{IH} = \int_o^b (\,x^2/b^2\,)\ 1/EJ\ dx = [1/3\,x^3/b^2\,]_o^b\ 1/EJ$

$= (1/3\,b\,)\ 1/EJ = 1/3\ b/EJ$

$L^{XX}_{HG} = \int_o^b (1)\ 1/EJ\ dx = [\,x\,]_o^b\ 1/EJ$

$= (\,b\,)\ 1/EJ = b/EJ$

$L^{XX}_{GH} = \int_o^b (1)\ 1/EJ\ dx = [\,x\,]_o^b\ 1/EJ$

$= (\,b\,)\ 1/EJ = b/EJ$

$L^{Xo}_{GA} = \int_o^b (1/2\,x/b - 1/2\,x^2/b^2)\ Fb\ 1/EJ\ dx = [1/4\,x^2/b - 1/6\,x^3/b^2\,]_o^b\ Fb\ 1/EJ$

$= (1/4\,b - 1/6\,b\,)\ Fb\ 1/EJ = 1/12\ Fb^2/EJ$

$L^{Xo}_{AG} = \int_o^b (1/2\,x/b - 1/2\,x^2/b^2\,)\ Fb\ 1/EJ\ dx = [1/4\,x^2/b - 1/6\,x^3/b^2\,]_o^b\ Fb\ 1/EJ$

$= (1/4\,b - 1/6\,b\,)\ Fb\ 1/EJ = 1/12\ Fb^2/EJ$

$L^{Xo}_{HI} = \int_o^b (-1/2 + x/b - 1/2\,x^2/b^2\,)\ Fb\ 1/EJ\ dx = [-1/2\,x + 1/2\,x^2/b - 1/6\,x^3/b^2\,]_o^b\ Fb\ 1/EJ$

$= (-1/2\,b + 1/2\,b - 1/6\,b\,)\ Fb\ 1/EJ = -1/6\ Fb^2/EJ$

$L^{Xo}_{IH} = \int_o^b (-1/2\,x^2/b^2\,)\ Fb\ 1/EJ\ dx = [-1/6\,x^3/b^2\,]_o^b\ Fb\ 1/EJ$

$= (-1/6\,b\,)\ Fb\ 1/EJ = -1/6\ Fb^2/EJ$

$L^{Xo}_{HG} = \int_o^b (3/2 - 3/2\,x/b\,)\ Fb\ 1/EJ\ dx - 1\ \ (-1)\ \ (-1)\ \ Fb^2/EJ$

$= [3/2\,x - 3/4\,x^2/b\,]_o^b\ Fb\ 1/EJ\ - 1\ \ (-1)\ \ (-1)\ \ Fb^2/EJ$

$= (3/2\,b - 3/4\,b\,)\ Fb\ 1/EJ\ - 1\ \ (-1)\ \ (-1)\ \ Fb^2/EJ = -1/4\ \ Fb^2/EJ$

$L^{Xo}_{GH} = \int_o^b (3/2\,x/b\,)\ Fb\ 1/EJ\ dx - 1\ \ (-1)\ \ (-1)\ \ Fb^2/EJ = [3/4\,x^2/b\,]_o^b\ Fb\ 1/EJ\ - 1\ \ (-1)\ \ (-1)\ \ Fb^2/EJ$

$= (3/4\,b\,)\ Fb\ 1/EJ\ - 1\ \ (-1)\ \ (-1)\ \ Fb^2/EJ = -1/4\ \ Fb^2/EJ$

PROCEDIMENTO E RISULTATI Nome: ESΣ05.xxxx.191

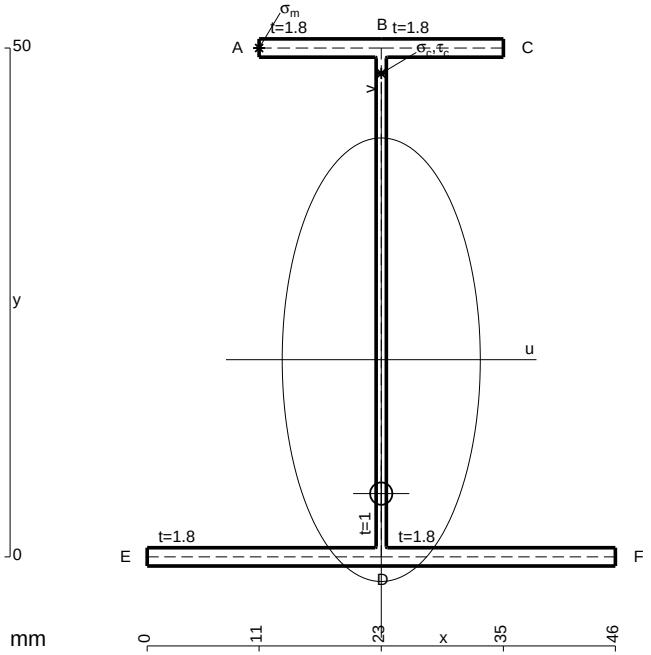

A = 176. mm^2
J_u = 83598. mm^4
J_v = 16674. mm^4
J_t = 152.7 mm^4
y_o = -13.16 mm
y_g = 19.38 mm
T_y = -1500. N
M_x = -564000. Nmm
x_m = 11. mm
y_m = 50. mm
u_m = -12. mm
v_m = 30.63 mm
$\sigma_m = -Mv/J_u$ = 206.6 N/mm^2
x_c = 23. mm
y_c = 50. mm
v_c = 30.63 mm
$\sigma_c = -Mv/J_u$ = 206.6 N/mm^2
$\tau_c = TS^*/tJ_u$ = 23.74 N/mm^2
$\tau_g = TS^*/tJ_u$ = 23.74 N/mm^2
t_c = 600. mm
$\sigma_o = \sqrt{\sigma^2 + 3\tau^2}$ = 210.7 N/mm^2

@ Adolfo Zavelani Rossi, Politecnico di Milano, vers.27.03.13 01.12.25

ESΣ05.xxxx.191

@ Adolfo Zavelani Rossi, Politecnico di Milano, vers.27.03.13 01.12.25

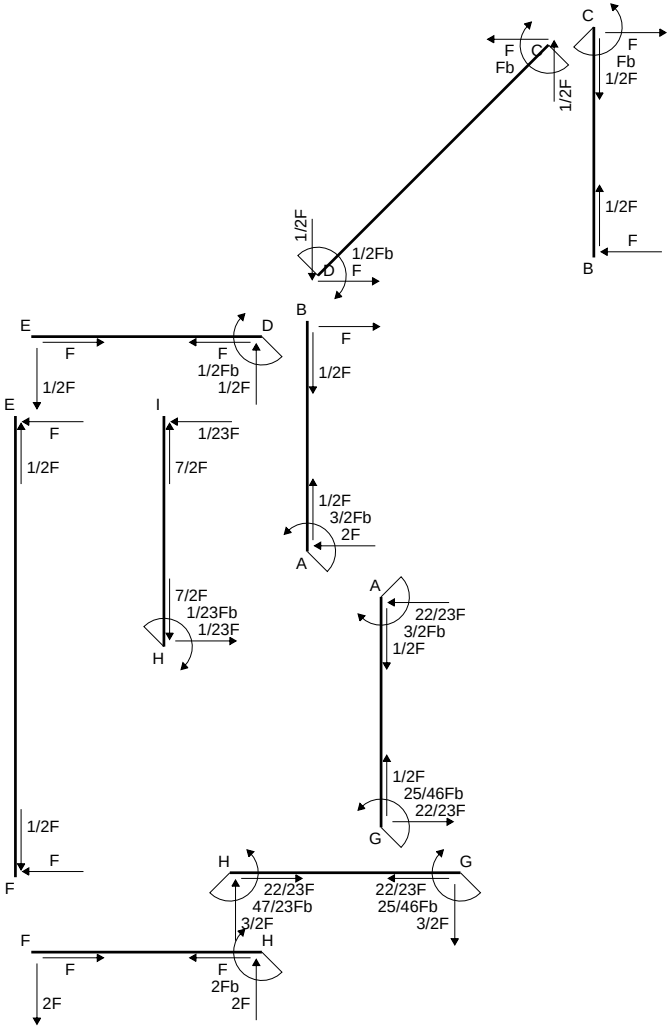
C
F
Fb
C
F
Fb
1/2F
1/2F
1/2F
F
B
1/2F
1/2Fb
D
F
E
D
F
F
1/2Fb
1/2F
B
F
1/2F
E
F
1/2F
I
1/23F
7/2F
1/2F
3/2Fb
2F
A
7/2F
1/23Fb
1/23F
H
A
22/23F
3/2Fb
1/2F
1/2F
25/46Fb
22/23F
G
1/2F
F
F
H
G
22/23F
47/23Fb
3/2F
22/23F
25/46Fb
3/2F
F
H
F
F
2Fb
2F
2F

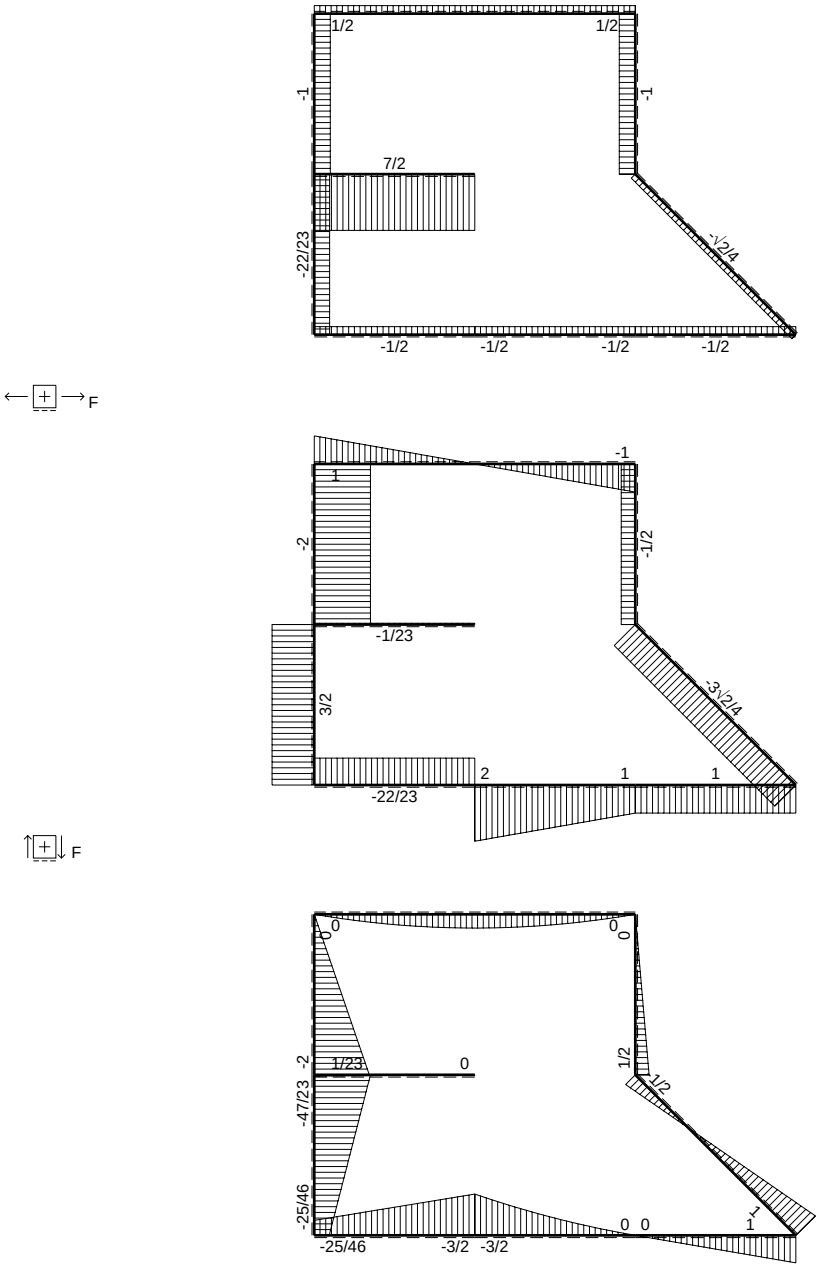
F
1/2
1/2
-1
-1
7/2
-22/23
-1/2
-1/2
-1/2
-1/2
F
-1
1
-2
-1/2
-1/23
3/2
-3/2
2
1
1
-22/23
F
0
0
0
0
-2
1/23
0
1/2
1/2
-47/23
-25/46
0 0
1
-25/46
-3/2
-3/2
Fb

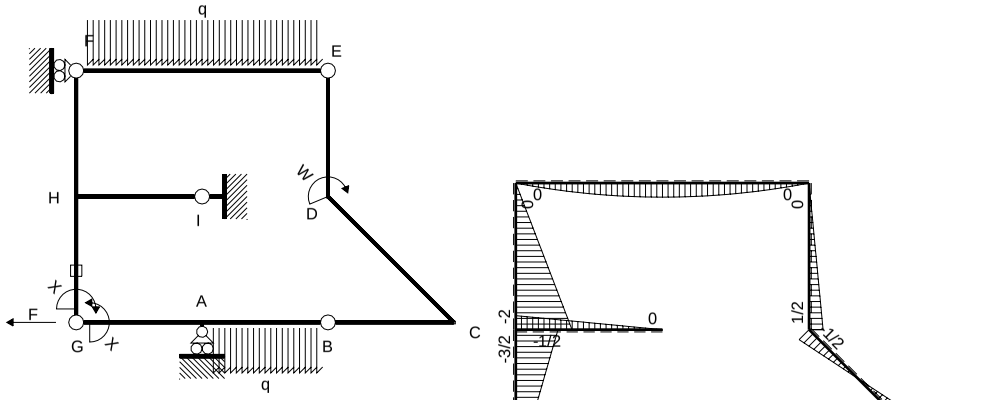

M_0 flessione da carichi assegnati

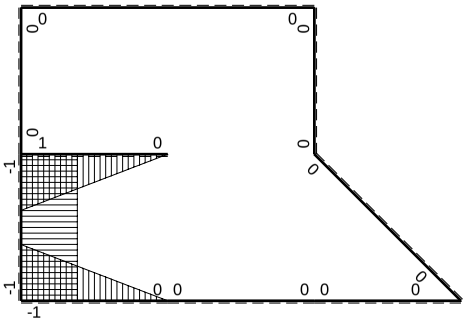

M_x flessione da iperstatica X=1

Quadro contributi PLV per iperstatica $X=W_{GA}$

→	$M_x(x)$	$M_0(x)$	M_xM_0	M_xM_x	$\int M_xM_0/EJdx$	$\int XM_xM_x/EJdx$
AB b	0	$-3/2Fb+2Fx-1/2qx^2$	0	0	0	0
BA b	0	$Fx+1/2qx^2$	0	0		
BC b	0	Fx	0	0	0	0
CB b	0	-Fb+Fx	0	0		
CD √2b	0	Fb-3√2/4Fx	0	0	0	0
DE b	0	1/2Fb-1/2Fx	0	0	0	0
ED b	0	-1/2Fx	0	0		
EF 2b	0	$-Fx+1/2qx^2$	0	0	0	0
FE 2b	0	$Fx-1/2qx^2$	0	0		
GA b	-1+x/b	-3/2Fx	$3/2Fx-3/2Fx^2/b$	$1-2x/b+x^2/b^2$	$1/4Fb^2/EJ$	1/3Xb/EJ
AG b	x/b	3/2Fb-3/2Fx	$3/2Fx-3/2Fx^2/b$	x^2/b^2		
FH b	0	-2Fx	0	0	0	0
HF b	0	2Fb-2Fx	0	0		
HI b	1-x/b	-1/2Fb+1/2Fx	$-1/2Fb+Fx-1/2Fx^2/b$	$1-2x/b+x^2/b^2$	$-1/6Fb^2/EJ$	1/3Xb/EJ
IH b	-x/b	1/2Fx	$-1/2Fx^2/b$	x^2/b^2		
HG b	-1	-3/2Fb+3/2Fx	3/2Fb-3/2Fx	1	$3/4Fb^2/EJ$	Xb/EJ
GH b	1	3/2Fx	3/2Fx	1		
HG	elongazione asta $N_{1HG}\varepsilon_{HG}L_{HG}$				$-Fb^2/EJ$	
A	molla nodo $-V_{1A}(V_{0A}+XV_{1A})/k_A$				$-7/8Fb^2/EJ$	1/4Xb/EJ
	totali				$-25/24Fb^2/EJ$	23/12Xb/EJ
	iperstatica $X=W_{GA}$				25/46Fb	

Sviluppi di calcolo iperstatica

$L^{XX}_{GA} = \int_o^b (1 - 2\,x/b + x^2/b^2)\ 1/EJ\ dx = [\,x - x^2/b + 1/3\,x^3/b^2\,]_o^b\ 1/EJ$

$= (\,b - b + 1/3\,b\,)\ 1/EJ = 1/3\ b/EJ$

$L^{XX}_{AG} = \int_o^b (\,x^2/b^2\,)\ 1/EJ\ dx = [1/3\,x^3/b^2\,]_o^b\ 1/EJ$

$= (1/3\,b\,)\ 1/EJ = 1/3\ b/EJ$

$L^{XX}_{HI} = \int_o^b (1 - 2\,x/b + x^2/b^2)\ 1/EJ\ dx = [\,x - x^2/b + 1/3\,x^3/b^2\,]_o^b\ 1/EJ$

$= (\,b - b + 1/3\,b\,)\ 1/EJ = 1/3\ b/EJ$

$L^{XX}_{IH} = \int_o^b (\,x^2/b^2\,)\ 1/EJ\ dx = [1/3\,x^3/b^2\,]_o^b\ 1/EJ$

$= (1/3\,b\,)\ 1/EJ = 1/3\ b/EJ$

$L^{XX}_{HG} = \int_o^b (1)\ 1/EJ\ dx = [\,x\,]_o^b\ 1/EJ$

$= (\,b\,)\ 1/EJ = b/EJ$

$L^{XX}_{GH} = \int_o^b (1)\ 1/EJ\ dx = [\,x\,]_o^b\ 1/EJ$

$= (\,b\,)\ 1/EJ = b/EJ$

$L^{Xo}_{GA} = \int_o^b (3/2\,x/b - 3/2\,x^2/b^2)\ Fb\ 1/EJ\ dx = [3/4\,x^2/b - 1/2\,x^3/b^2\,]_o^b\ Fb\ 1/EJ$

$= (3/4\,b - 1/2\,b\,)\ Fb\ 1/EJ = 1/4\ Fb^2/EJ$

$L^{Xo}_{AG} = \int_o^b (3/2\,x/b - 3/2\,x^2/b^2\,)\ Fb\ 1/EJ\ dx = [3/4\,x^2/b - 1/2\,x^3/b^2\,]_o^b\ Fb\ 1/EJ$

$= (3/4\,b - 1/2\,b\,)\ Fb\ 1/EJ = 1/4\ Fb^2/EJ$

$L^{Xo}_{HI} = \int_o^b (-1/2 + x/b - 1/2\,x^2/b^2\,)\ Fb\ 1/EJ\ dx = [-1/2\,x + 1/2\,x^2/b - 1/6\,x^3/b^2\,]_o^b\ Fb\ 1/EJ$

$= (-1/2\,b + 1/2\,b - 1/6\,b\,)\ Fb\ 1/EJ = -1/6\ Fb^2/EJ$

$L^{Xo}_{IH} = \int_o^b (-1/2\,x^2/b^2\,)\ Fb\ 1/EJ\ dx = [-1/6\,x^3/b^2\,]_o^b\ Fb\ 1/EJ$

$= (-1/6\,b\,)\ Fb\ 1/EJ = -1/6\ Fb^2/EJ$

$L^{Xo}_{HG} = \int_o^b (3/2 - 3/2\,x/b\,)\ Fb\ 1/EJ\ dx - 1\ \ (-1)\ \ (-1)\ \ Fb^2/EJ$

$= [3/2\,x - 3/4\,x^2/b\,]_o^b\ Fb\ 1/EJ\ -\ 1\ \ (-1)\ \ (-1)\ \ Fb^2/EJ$

$= (3/2\,b - 3/4\,b\,)\ Fb\ 1/EJ\ -\ 1\ \ (-1)\ \ (-1)\ \ Fb^2/EJ = -1/4\ \ Fb^2/EJ$

$L^{Xo}_{GH} = \int_o^b (3/2\,x/b\,)\ Fb\ 1/EJ\ dx - 1\ \ (-1)\ \ (-1)\ \ Fb^2/EJ = [3/4\,x^2/b\,]_o^b\ Fb\ 1/EJ\ -\ 1\ \ (-1)\ \ (-1)\ \ Fb^2/EJ$

$= (3/4\,b\,)\ Fb\ 1/EJ\ -\ 1\ \ (-1)\ \ (-1)\ \ Fb^2/EJ = -1/4\ \ Fb^2/EJ$

PROCEDIMENTO E RISULTATI Nome: ESΣ05.xxxx.192

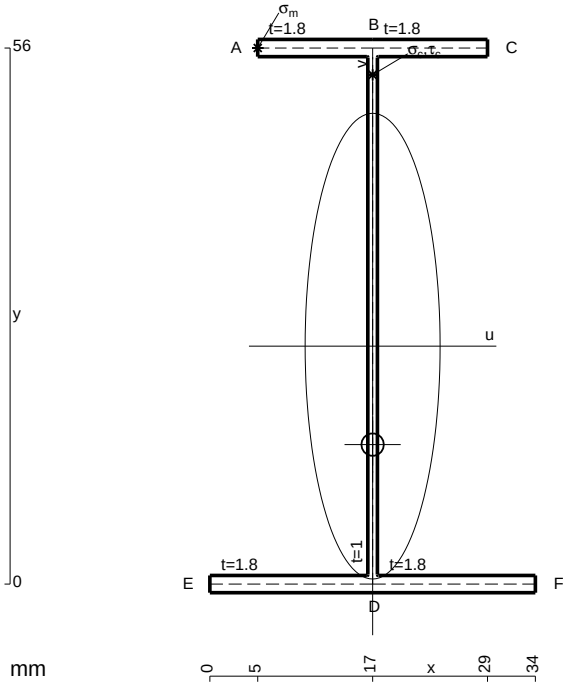

A = 160.4 mm^2
J_u = 94901. mm^4
J_v = 7969. mm^4
J_t = 131.4 mm^4
y_o = -10.29 mm
y_g = 24.86 mm
N = -590. N
T_y = -1180. N
M_x = -672600. Nmm
x_m = 5. mm
y_m = 56. mm
u_m = -12. mm
v_m = 31.14 mm
$\sigma_m = N/A - Mv/J_u$ = 217. N/mm^2
x_c = 17. mm
y_c = 56. mm
v_c = 31.14 mm
$\sigma_c = N/A - Mv/J_u$ = 217. N/mm^2
$\tau_c = TS^*/tJ_u$ = 16.73 N/mm^2
$\tau_g = TS^*/tJ_u$ = 16.73 N/mm^2
t_c = 590. mm
$\sigma_o = \sqrt{\sigma^2 + 3\tau^2}$ = 219. N/mm^2

@ Adolfo Zavelani Rossi, Politecnico di Milano, vers.27.03.13 01.12.25

ESΣ05.xxxx.192

@ Adolfo Zavelani Rossi, Politecnico di Milano, vers.27.03.13 01.12.25

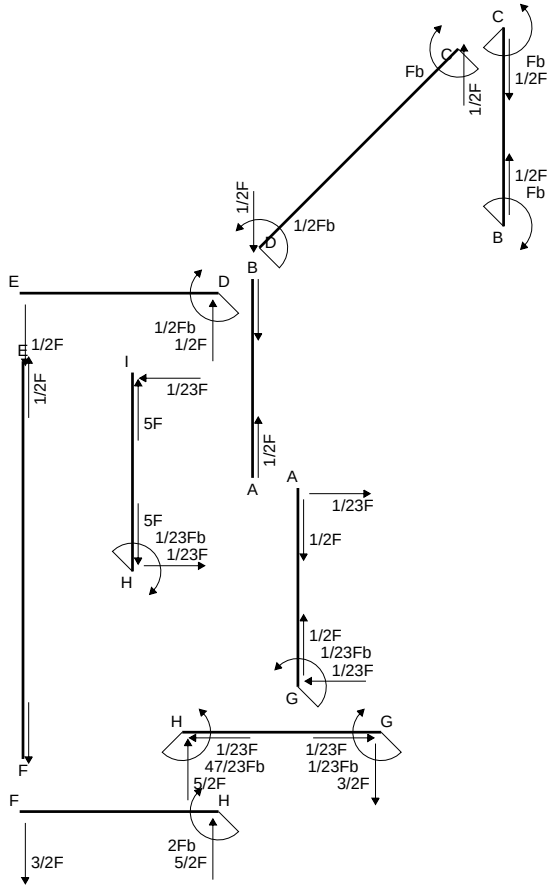
C
Fb
C
Fb
1/2F
1/2F
1/2F
Fb
B
1/2F
1/2Fb
D
B
E
D
1/2Fb
1/2F
E
1/2F
I
1/23F
1/2F
5F
A
A
1/23F
5F
1/23Fb
1/23F
H
1/2F
1/2F
1/23Fb
1/23F
G
H
G
1/23F
47/23Fb
5/2F
1/23F
1/23Fb
3/2F
F
F
H
2Fb
5/2F
3/2F

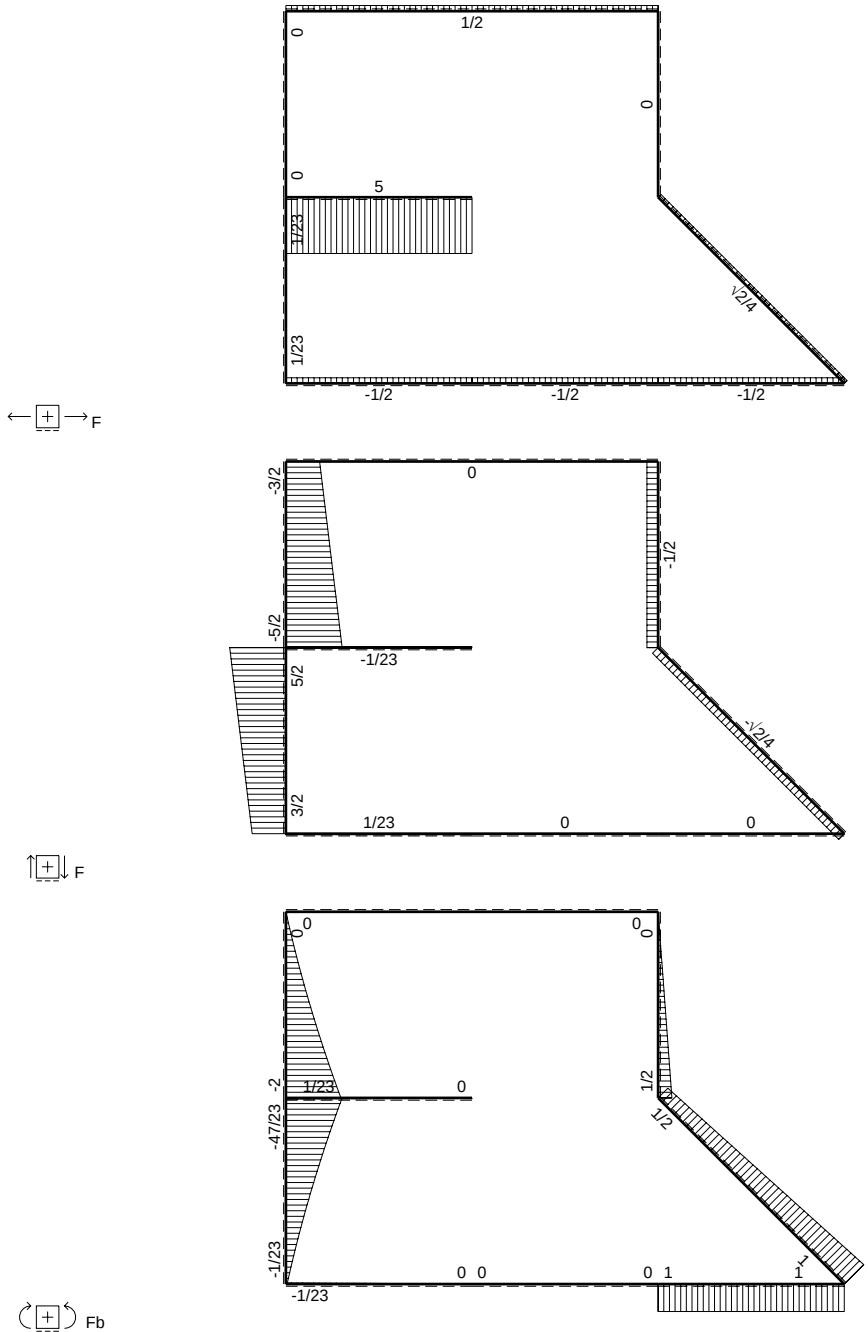
F
0
1/2
0
0
5
1/23
√2/4
1/23
-1/2
-1/2
-1/2
F
-3/2
0
-1/2
-5/2
-1/23
5/2
-√2/4
3/2
1/23
0
0
Fb
0
0
0
0
-2
1/23
0
1/2
-47/23
1/2
-1/23
0 0
0 1
1
-1/23

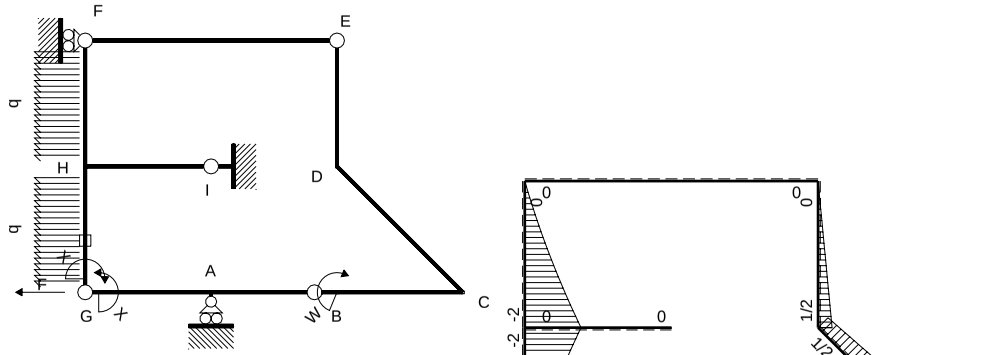

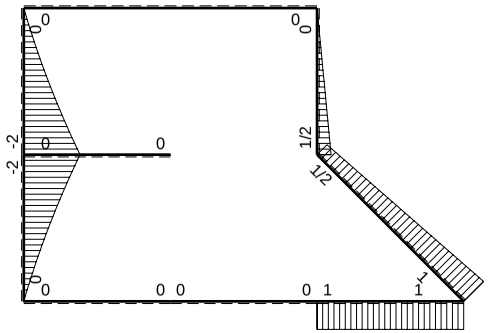

M_0 flessione da carichi assegnati

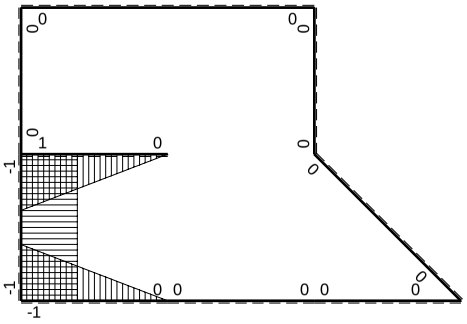

M_x flessione da iperstatica X=1

Quadro contributi PLV per iperstatica $X=W_{GA}$

→	$M_x(x)$	$M_0(x)$	M_xM_0	M_xM_x	$\int M_xM_0/EJdx$	$\int XM_xM_x/EJdx$
AB b	0	0	0	0	0	0
BA b	0	0	0	0		
BC b	0	Fb	0	0	0	0
CB b	0	-Fb	0	0		
CD √2b	0	Fb-√2/4Fx	0	0	0	0
DE b	0	1/2Fb-1/2Fx	0	0	0	0
ED b	0	-1/2Fx	0	0		
EF 2b	0	0	0	0	0	0
FE 2b	0	0	0	0		
GA b	-1+x/b	0	0	$1-2x/b+x^2/b^2$	0	1/3Xb/EJ
AG b	x/b	0	0	x^2/b^2		
FH b	0	$-3/2Fx-1/2qx^2$	0	0	0	0
HF b	0	$2Fb-5/2Fx+1/2qx^2$	0	0		
HI b	1-x/b	0	0	$1-2x/b+x^2/b^2$	0	1/3Xb/EJ
IH b	-x/b	0	0	x^2/b^2		
HG b	-1	$-2Fb+5/2Fx-1/2qx^2$	$2Fb-5/2Fx+1/2Fx^2/b$	1	$11/12Fb^2/EJ$	Xb/EJ
GH b	1	$3/2Fx+1/2qx^2$	$3/2Fx+1/2Fx^2/b$	1		
HG	elongazione asta $N_{1HG}\varepsilon_{HG}L_{HG}$				$-Fb^2/EJ$	
A	molla nodo $-V_{1A}(V_{0A}+XV_{1A})/k_A$					1/4Xb/EJ
	totali				$-1/12Fb^2/EJ$	23/12Xb/EJ
	iperstatica $X=W_{GA}$				1/23Fb	

Sviluppi di calcolo iperstatica

$L^{XX}_{GA} = \int_o^b (1 - 2\,x/b + x^2/b^2)\ 1/EJ\ dx = [\,x - x^2/b + 1/3\,x^3/b^2\,]_o^b\ 1/EJ$

$= (\,b - b + 1/3\,b\,)\ 1/EJ = 1/3\ b/EJ$

$L^{XX}_{AG} = \int_o^b (\,x^2/b^2\,)\ 1/EJ\ dx = [1/3\,x^3/b^2\,]_o^b\ 1/EJ$

$= (1/3\,b\,)\ 1/EJ = 1/3\ b/EJ$

$L^{XX}_{HI} = \int_o^b (1 - 2\,x/b + x^2/b^2)\ 1/EJ\ dx = [\,x - x^2/b + 1/3\,x^3/b^2\,]_o^b\ 1/EJ$

$= (\,b - b + 1/3\,b\,)\ 1/EJ = 1/3\ b/EJ$

$L^{XX}_{IH} = \int_o^b (\,x^2/b^2\,)\ 1/EJ\ dx = [1/3\,x^3/b^2\,]_o^b\ 1/EJ$

$= (1/3\,b\,)\ 1/EJ = 1/3\ b/EJ$

$L^{XX}_{HG} = \int_o^b (1)\ 1/EJ\ dx = [\,x\,]_o^b\ 1/EJ$

$= (\,b\,)\ 1/EJ = b/EJ$

$L^{XX}_{GH} = \int_o^b (1)\ 1/EJ\ dx = [\,x\,]_o^b\ 1/EJ$

$= (\,b\,)\ 1/EJ = b/EJ$

$L^{Xo}_{HG} = \int_o^b (2 - 5/2\,x/b + 1/2\,x^2/b^2)\ Fb\ 1/EJ\ dx - 1\ \ (-1)\ \ (-1)\ \ Fb^2/EJ$

$= [\,2\,x - 5/4\,x^2/b + 1/6\,x^3/b^2\,]_o^b\ Fb\ 1/EJ\ - 1\ \ (-1)\ \ (-1)\ \ Fb^2/EJ$

$= (\,2\,b - 5/4\,b + 1/6\,b\,)\ Fb\ 1/EJ\ - 1\ \ (-1)\ \ (-1)\ \ Fb^2/EJ = -1/12\ \ Fb^2/EJ$

$L^{Xo}_{GH} = \int_o^b (3/2\,x/b + 1/2\,x^2/b^2)\ Fb\ 1/EJ\ dx - 1\ \ (-1)\ \ (-1)\ \ Fb^2/EJ$

$= [\,3/4\,x^2/b + 1/6\,x^3/b^2\,]_o^b\ Fb\ 1/EJ\ - 1\ \ (-1)\ \ (-1)\ \ Fb^2/EJ$

$= (\,3/4\,b + 1/6\,b\,)\ Fb\ 1/EJ\ - 1\ \ (-1)\ \ (-1)\ \ Fb^2/EJ = -1/12\ \ Fb^2/EJ$

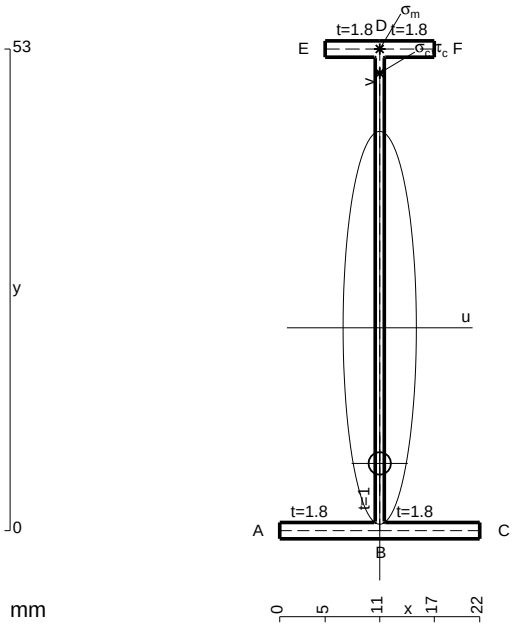

A = 114.2 mm^2
J_u = 53392. mm^4
J_v = 1856. mm^4
J_t = 83.76 mm^4
y_o = -14.92 mm
y_g = 22.32 mm
T_y = -850. N
M_x = -394400. Nmm
x_m = 11. mm
y_m = 53. mm
v_m = 30.68 mm
$\sigma_m = -Mv/J_u$ = 226.6 N/mm^2
y_c = 2. mm
u_c = -11. mm
v_c = -20.32 mm
$\sigma_c = -Mv/J_u$ = 226.6 N/mm^2
$\tau_c = TS^*/tJ_u$ = 10.55 N/mm^2
$\tau_g = TS^*/tJ_u$ = 10.55 N/mm^2
t_c = 340. mm
$\sigma_o = \sqrt{\sigma^2 + 3\tau^2}$ = 227.3 N/mm^2

ESΣ05.xxxx.193

@ Adolfo Zavelani Rossi, Politecnico di Milano, vers.27.03.13 01.12.25

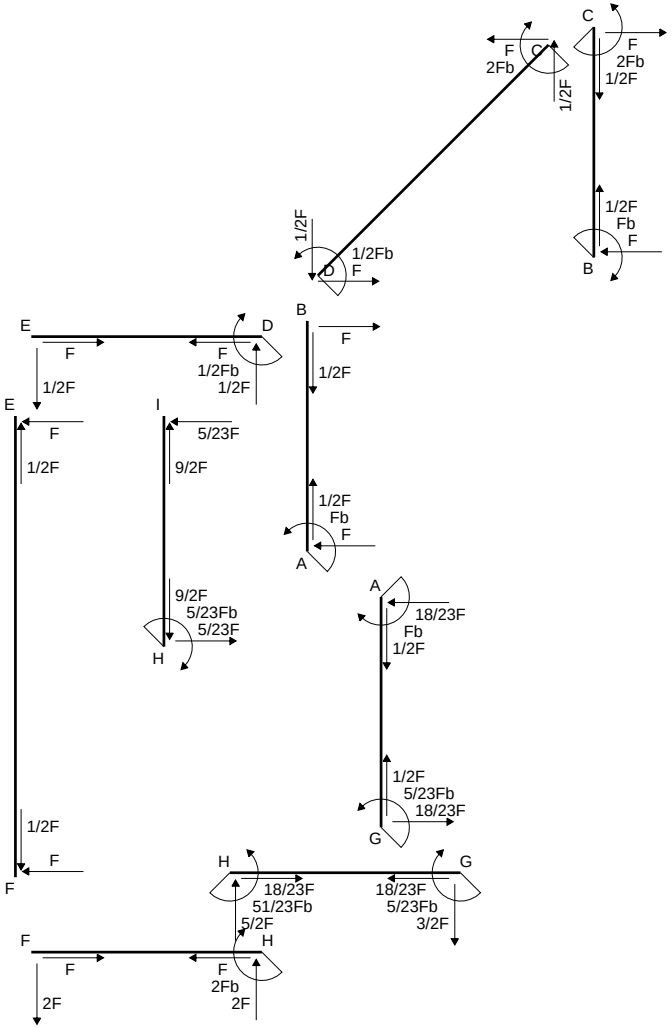
C
F
2Fb
C
1/2F
F
2Fb
1/2F
1/2F
1/2F
Fb
F
B
1/2Fb
F
D
B
F
1/2F
E
D
F
F
1/2Fb
1/2F
E
F
1/2F
I
5/23F
9/2F
1/2F
Fb
F
A
9/2F
5/23Fb
5/23F
H
A
18/23F
Fb
1/2F
1/2F
5/23Fb
18/23F
G
1/2F
F
F
H
18/23F
51/23Fb
5/2F
G
18/23F
5/23Fb
3/2F
F
F
H
F
2Fb
2F
F
2F

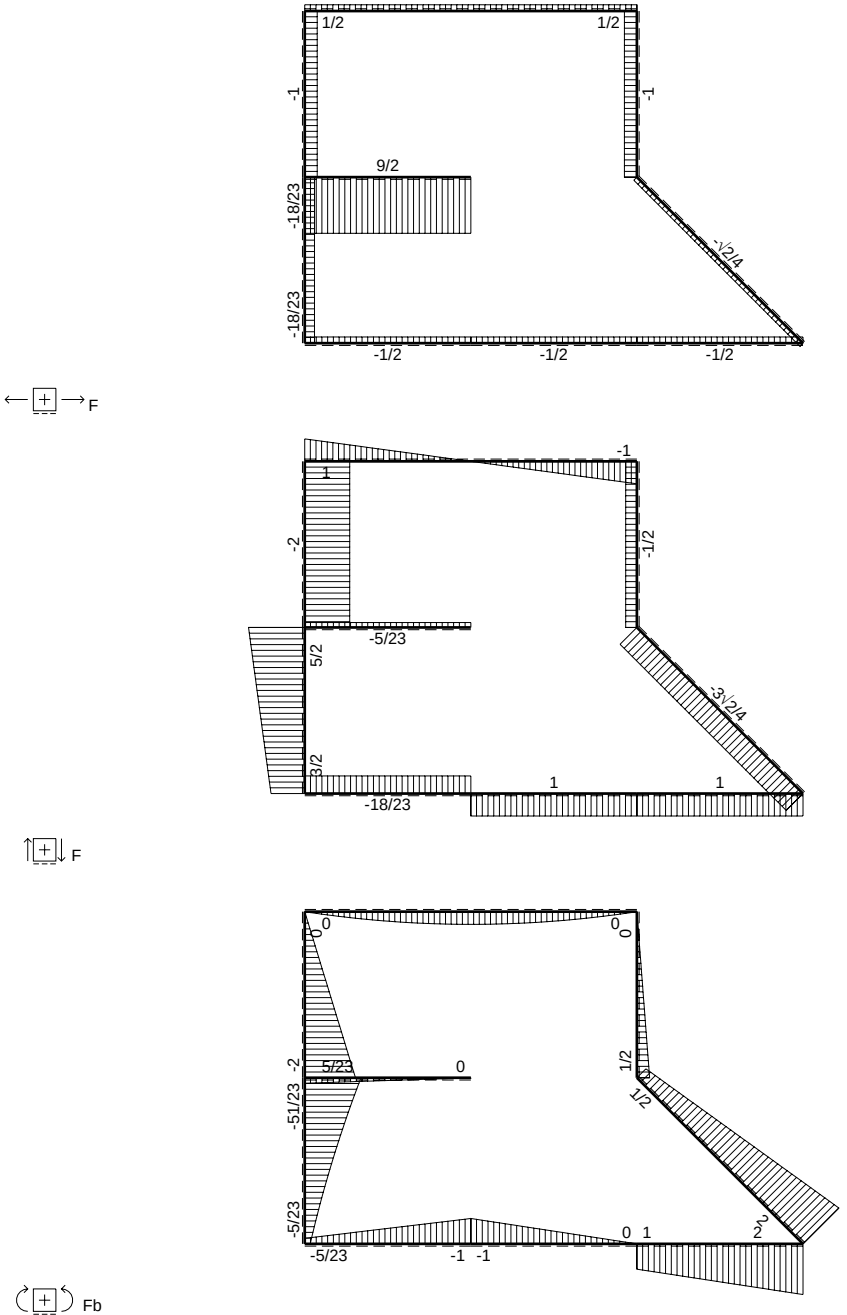
1/2
1/2
-1
-1
9/2
-18/23
-18/23
-√2/4
-1/2
-1/2
-1/2
F
-1
1
-2
-1/2
-5/23
5/2
-3√2/4
3/2
1
1
-18/23
F
0
0
0
0
-2
5/23
0
1/2
1/2
-51/23
-5/23
0 1
-5/23
-1 -1
Fb

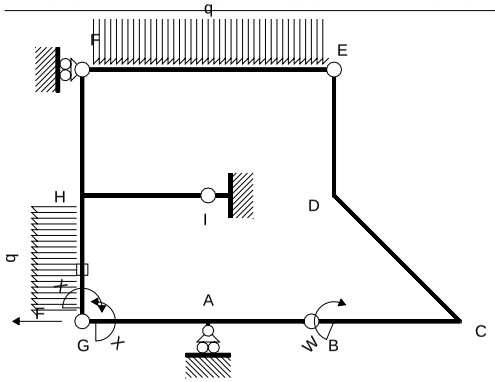

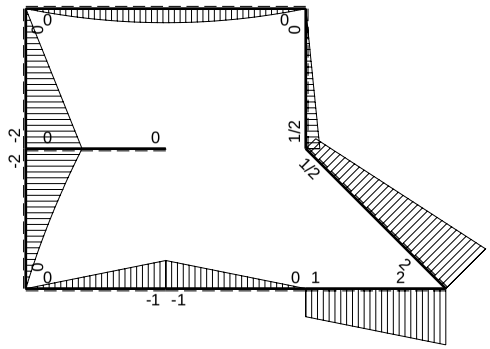

M_0 flessione da carichi assegnati

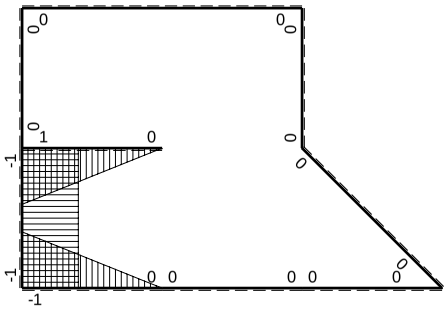

M_x flessione da iperstatica X=1

Quadro contributi PLV per iperstatica $X=W_{GA}$

→	$M_x(x)$	$M_0(x)$	M_xM_0	M_xM_x	$\int M_xM_0/EJdx$	$\int XM_xM_x/EJdx$
AB b	0	-Fb+Fx	0	0	0	0
BA b	0	Fx	0	0		
BC b	0	Fb+Fx	0	0	0	0
CB b	0	-2Fb+Fx	0	0		
CD √2b	0	2Fb-3√2/4Fx	0	0	0	0
DE b	0	1/2Fb-1/2Fx	0	0	0	0
ED b	0	-1/2Fx	0	0		
EF 2b	0	$-Fx+1/2qx^2$	0	0	0	0
FE 2b	0	$Fx-1/2qx^2$	0	0		
GA b	-1+x/b	-Fx	$Fx-Fx^2/b$	$1-2x/b+x^2/b^2$	$1/6Fb^2/EJ$	1/3Xb/EJ
AG b	x/b	Fb-Fx	$Fx-Fx^2/b$	x^2/b^2		
FH b	0	-2Fx	0	0	0	0
HF b	0	2Fb-2Fx	0	0		
HI b	1-x/b	0	0	$1-2x/b+x^2/b^2$	0	1/3Xb/EJ
IH b	-x/b	0	0	x^2/b^2		
HG b	-1	$-2Fb+5/2Fx-1/2qx^2$	$2Fb-5/2Fx+1/2Fx^2/b$	1	$11/12Fb^2/EJ$	Xb/EJ
GH b	1	$3/2Fx+1/2qx^2$	$3/2Fx+1/2Fx^2/b$	1		
HG	elongazione asta $N_{1HG}\varepsilon_{HG}L_{HG}$				$-Fb^2/EJ$	
A	molla nodo $-V_{1A}(V_{0A}+XV_{1A})/k_A$				$-1/2Fb^2/EJ$	1/4Xb/EJ
	totali				$-5/12Fb^2/EJ$	23/12Xb/EJ
	iperstatica $X=W_{GA}$				5/23Fb	

Sviluppi di calcolo iperstatica

PROCEDIMENTO E RISULTATI Nome: ESΣ05.xxxx.194

@ Adolfo Zavelani Rossi, Politecnico di Milano, vers.27.03.13 01.12.25

$L^{XX}_{GA} = \int_o^b (1 - 2\,x/b + x^2/b^2)\ 1/EJ\ dx = [\,x - x^2/b + 1/3\,x^3/b^2\,]_o^b\ 1/EJ$

$= (\,b - b + 1/3\,b\,)\ 1/EJ = 1/3\ b/EJ$

$L^{XX}_{AG} = \int_o^b (\,x^2/b^2\,)\ 1/EJ\ dx = [1/3\,x^3/b^2\,]_o^b\ 1/EJ$

$= (1/3\,b)\ 1/EJ = 1/3\ b/EJ$

$L^{XX}_{HI} = \int_o^b (1 - 2\,x/b + x^2/b^2)\ 1/EJ\ dx = [\,x - x^2/b + 1/3\,x^3/b^2\,]_o^b\ 1/EJ$

$= (\,b - b + 1/3\,b\,)\ 1/EJ = 1/3\ b/EJ$

$L^{XX}_{IH} = \int_o^b (\,x^2/b^2\,)\ 1/EJ\ dx = [1/3\,x^3/b^2\,]_o^b\ 1/EJ$

$= (1/3\,b)\ 1/EJ = 1/3\ b/EJ$

$L^{XX}_{HG} = \int_o^b (1)\ 1/EJ\ dx = [\,x\,]_o^b\ 1/EJ$

$= (\,b\,)\ 1/EJ = b/EJ$

$L^{XX}_{GH} = \int_o^b (1)\ 1/EJ\ dx = [\,x\,]_o^b\ 1/EJ$

$= (\,b\,)\ 1/EJ = b/EJ$

$L^{Xo}_{GA} = \int_o^b (\,x/b - x^2/b^2\,)\ Fb\ 1/EJ\ dx = [1/2\,x^2/b - 1/3\,x^3/b^2\,]_o^b\ Fb\ 1/EJ$

$= (1/2\,b - 1/3\,b\,)\ Fb\ 1/EJ = 1/6\ Fb^2/EJ$

$L^{Xo}_{AG} = \int_o^b (\,x/b - x^2/b^2\,)\ Fb\ 1/EJ\ dx = [1/2\,x^2/b - 1/3\,x^3/b^2\,]_o^b\ Fb\ 1/EJ$

$= (1/2\,b - 1/3\,b\,)\ Fb\ 1/EJ = 1/6\ Fb^2/EJ$

$L^{Xo}_{HG} = \int_o^b (2 - 5/2\,x/b + 1/2\,x^2/b^2\,)\ Fb\ 1/EJ\ dx - 1\ \ (-1)\ \ (-1)\ \ Fb^2/EJ$

$= [\,2\,x - 5/4\,x^2/b + 1/6\,x^3/b^2\,]_o^b\ Fb\ 1/EJ\ - 1\ \ (-1)\ \ (-1)\ \ Fb^2/EJ$

$= (\,2\,b - 5/4\,b + 1/6\,b\,)\ Fb\ 1/EJ\ - 1\ \ (-1)\ \ (-1)\ \ Fb^2/EJ = -1/12\ \ Fb^2/EJ$

$L^{Xo}_{GH} = \int_o^b (3/2\,x/b + 1/2\,x^2/b^2\,)\ Fb\ 1/EJ\ dx - 1\ \ (-1)\ \ (-1)\ \ Fb^2/EJ$

$= [\,3/4\,x^2/b + 1/6\,x^3/b^2\,]_o^b\ Fb\ 1/EJ\ - 1\ \ (-1)\ \ (-1)\ \ Fb^2/EJ$

$= (\,3/4\,b + 1/6\,b\,)\ Fb\ 1/EJ\ - 1\ \ (-1)\ \ (-1)\ \ Fb^2/EJ = -1/12\ \ Fb^2/EJ$

PROCEDIMENTO E RISULTATI Nome: ESΣ05.xxxx.194

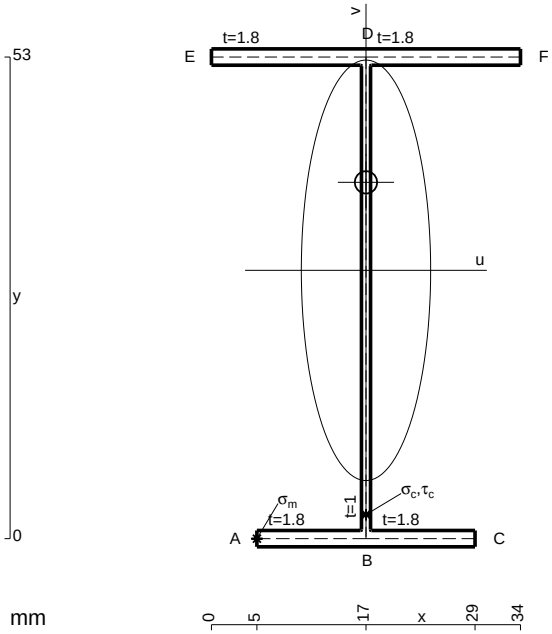

A = 157.4 mm^2
J_u = 84276. mm^4
J_v = 7969. mm^4
J_t = 130.4 mm^4
y_o = 9.679 mm
y_g = 29.53 mm
N = -530. N
T_y = -1060. N
M_x = -667800. Nmm
x_m = 5. mm
u_m = -12. mm
v_m = -29.53 mm
$\sigma_m = N/A - Mv/J_u$ = -237.4 N/mm^2
x_c = 17. mm
v_c = -29.53 mm
$\sigma_c = N/A - Mv/J_u$ = -237.4 N/mm^2
$\tau_c = TS^*/tJ_u$ = 16.05 N/mm^2
$\tau_g = TS^*/tJ_u$ = 16.05 N/mm^2
t_c = 530. mm
$\sigma_o = \sqrt{\sigma^2 + 3\tau^2}$ = 239. N/mm^2

@ Adolfo Zavelani Rossi, Politecnico di Milano, vers.27.03.13 01.12.25

ESΣ05.xxxx.194

@ Adolfo Zavelani Rossi, Politecnico di Milano, vers.27.03.13 01.12.25

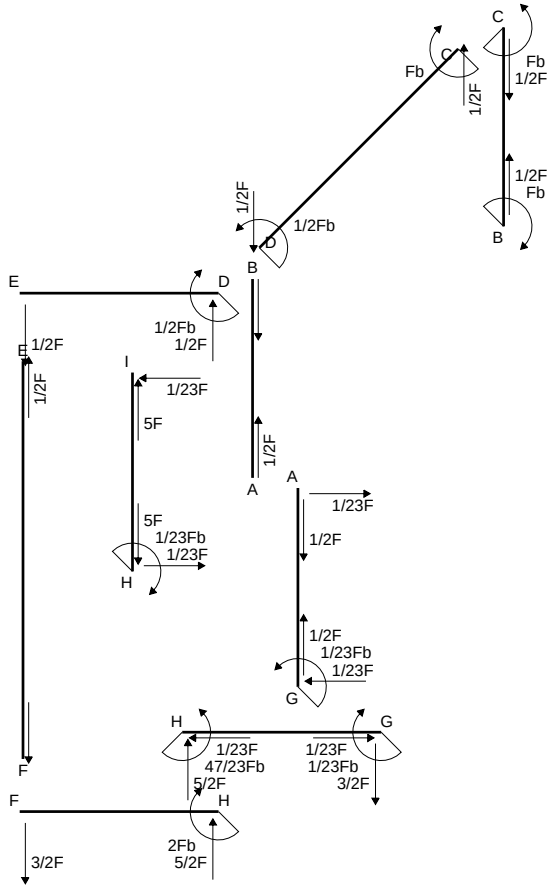
C
Fb
1/2F
G
Fb
1/2F
1/2F
1/2F
Fb
B
1/2F
1/2Fb
D
B
E
D
1/2Fb
1/2F
E
1/2F
I
1/23F
1/2F
5F
A
A
1/23F
5F
1/23Fb
1/23F
H
1/2F
1/2F
1/23Fb
1/23F
G
H
G
1/23F
47/23Fb
5/2F
1/23F
1/23Fb
3/2F
F
H
F
2Fb
5/2F
3/2F

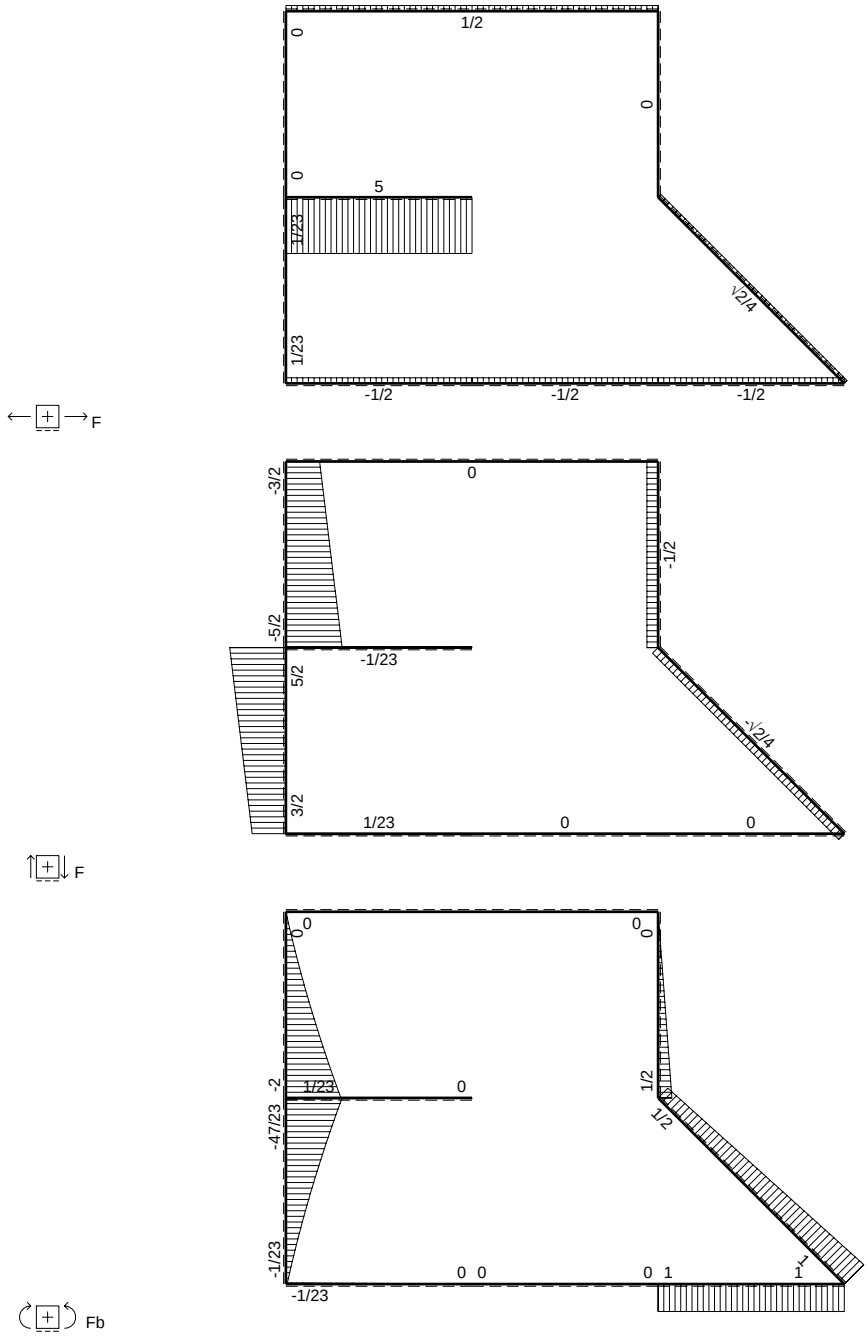
F
1/2
0
0
0
5
1/23
√2/4
1/23
-1/2
-1/2
-1/2
F
-3/2
0
-1/2
-5/2
-1/23
5/2
-√2/4
3/2
1/23
0
0
Fb
0
0
0
0
-2
1/23
0
1/2
-47/23
1/2
-1/23
0 0
0 1
1
-1/23

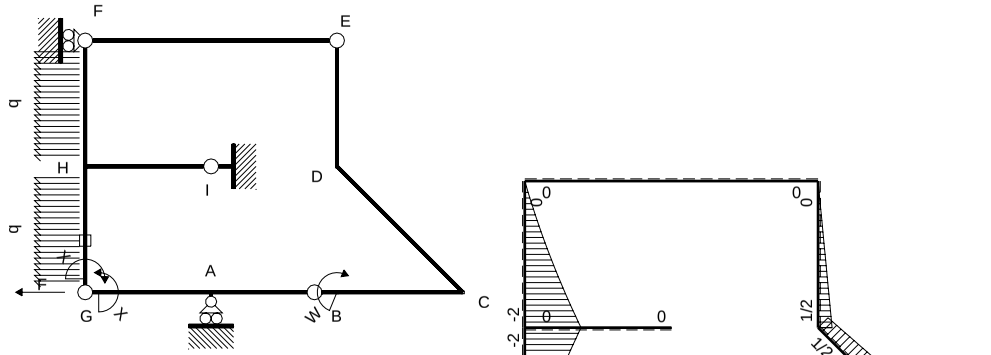

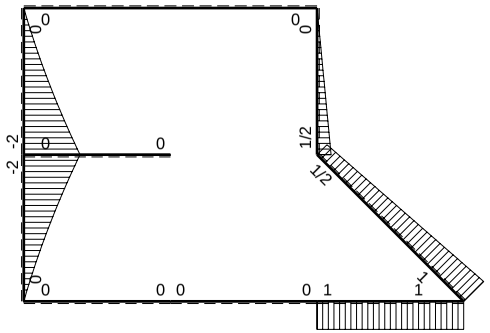

M_0 flessione da carichi assegnati

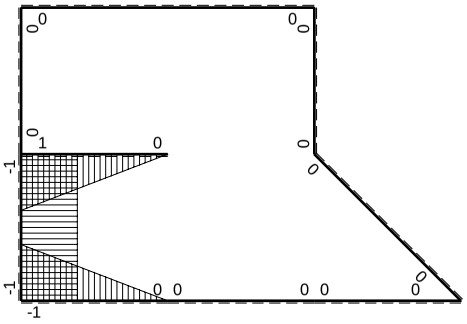

M_x flessione da iperstatica X=1

Quadro contributi PLV per iperstatica $X=W_{GA}$

→	$M_x(x)$	$M_0(x)$	M_xM_0	M_xM_x	$\int M_xM_0/EJdx$	$\int XM_xM_x/EJdx$
AB b	0	0	0	0	0	0
BA b	0	0	0	0		
BC b	0	Fb	0	0	0	0
CB b	0	-Fb	0	0		
CD √2b	0	Fb-√2/4Fx	0	0	0	0
DE b	0	1/2Fb-1/2Fx	0	0	0	0
ED b	0	-1/2Fx	0	0		
EF 2b	0	0	0	0	0	0
FE 2b	0	0	0	0		
GA b	-1+x/b	0	0	$1-2x/b+x^2/b^2$	0	1/3Xb/EJ
AG b	x/b	0	0	x^2/b^2		
FH b	0	$-3/2Fx-1/2qx^2$	0	0	0	0
HF b	0	$2Fb-5/2Fx+1/2qx^2$	0	0		
HI b	1-x/b	0	0	$1-2x/b+x^2/b^2$	0	1/3Xb/EJ
IH b	-x/b	0	0	x^2/b^2		
HG b	-1	$-2Fb+5/2Fx-1/2qx^2$	$2Fb-5/2Fx+1/2Fx^2/b$	1	$11/12Fb^2/EJ$	Xb/EJ
GH b	1	$3/2Fx+1/2qx^2$	$3/2Fx+1/2Fx^2/b$	1		
HG	elongazione asta $N_{1HG}\varepsilon_{HG}L_{HG}$				$-Fb^2/EJ$	
A	molla nodo $-V_{1A}(V_{0A}+XV_{1A})/k_A$					1/4Xb/EJ
	totali				$-1/12Fb^2/EJ$	23/12Xb/EJ
	iperstatica $X=W_{GA}$				1/23Fb	

Sviluppi di calcolo iperstatica

$L^{XX}_{GA} = \int_o^b (1 - 2\,x/b + x^2/b^2)\ 1/EJ\ dx = [\ x - x^2/b + 1/3\ x^3/b^2\ ]_o^b\ 1/EJ$

$= (\ b - b + 1/3\ b\ )\ 1/EJ\ = 1/3\ b/EJ$

$L^{XX}_{AG} = \int_o^b (\ x^2/b^2\ )\ 1/EJ\ dx = [1/3\ x^3/b^2\ ]_o^b\ 1/EJ$

$= (1/3\ b\ )\ 1/EJ\ = 1/3\ b/EJ$

$L^{XX}_{HI} = \int_o^b (1 - 2\,x/b + x^2/b^2)\ 1/EJ\ dx = [\ x - x^2/b + 1/3\ x^3/b^2\ ]_o^b\ 1/EJ$

$= (\ b - b + 1/3\ b\ )\ 1/EJ\ = 1/3\ b/EJ$

$L^{XX}_{IH} = \int_o^b (\ x^2/b^2\ )\ 1/EJ\ dx = [1/3\ x^3/b^2\ ]_o^b\ 1/EJ$

$= (1/3\ b\ )\ 1/EJ\ = 1/3\ b/EJ$

$L^{XX}_{HG} = \int_o^b (1\ )\ 1/EJ\ dx = [\ x\ ]_o^b\ 1/EJ$

$= (\ b\ )\ 1/EJ\ =\ b/EJ$

$L^{XX}_{GH} = \int_o^b (1\ )\ 1/EJ\ dx = [\ x\ ]_o^b\ 1/EJ$

$= (\ b\ )\ 1/EJ\ =\ b/EJ$

$L^{Xo}_{HG} = \int_o^b (2 - 5/2\ x/b + 1/2\ x^2/b^2)\ Fb\ 1/EJ\ dx - 1\ \ (-1)\ \ (-1)\ \ Fb^2/EJ$

$= [2\ x - 5/4\ x^2/b + 1/6\ x^3/b^2\ ]_o^b\ Fb\ 1/EJ\ - 1\ \ (-1)\ \ (-1)\ \ Fb^2/EJ$

$= (2\ b - 5/4\ b + 1/6\ b\ )\ Fb\ 1/EJ\ - 1\ \ (-1)\ \ (-1)\ \ Fb^2/EJ = -1/12\ \ Fb^2/EJ$

$L^{Xo}_{GH} = \int_o^b (3/2\ x/b + 1/2\ x^2/b^2)\ Fb\ 1/EJ\ dx - 1\ \ (-1)\ \ (-1)\ \ Fb^2/EJ$

$= [3/4\ x^2/b + 1/6\ x^3/b^2\ ]_o^b\ Fb\ 1/EJ\ - 1\ \ (-1)\ \ (-1)\ \ Fb^2/EJ$

$= (3/4\ b + 1/6\ b\ )\ Fb\ 1/EJ\ - 1\ \ (-1)\ \ (-1)\ \ Fb^2/EJ = -1/12\ \ Fb^2/EJ$

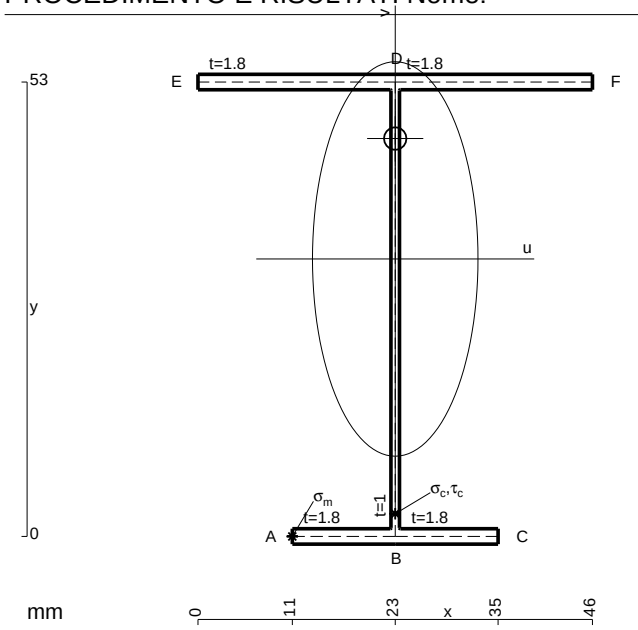

A = 179. mm^2
J_u = 94738. mm^4
J_v = 16674. mm^4
J_t = 153.7 mm^4
y_o = 14.05 mm
y_g = 32.36 mm
T_y = -1075. N
M_x = -576200. Nmm
x_m = 11. mm
u_m = -12. mm
v_m = -32.36 mm
$\sigma_m = -Mv/J_u$ = -196.8 N/mm^2
x_c = 23. mm
v_c = -32.36 mm
$\sigma_c = -Mv/J_u$ = -196.8 N/mm^2
$\tau_c = TS^*/tJ_u$ = 15.86 N/mm^2
$\tau_g = TS^*/tJ_u$ = 15.86 N/mm^2
t_c = 430. mm
$\sigma_o = \sqrt{\sigma^2 + 3\tau^2}$ = 198.7 N/mm^2

ESΣ05.xxxx.195

@ Adolfo Zavelani Rossi, Politecnico di Milano, vers.27.03.13 01.12.25

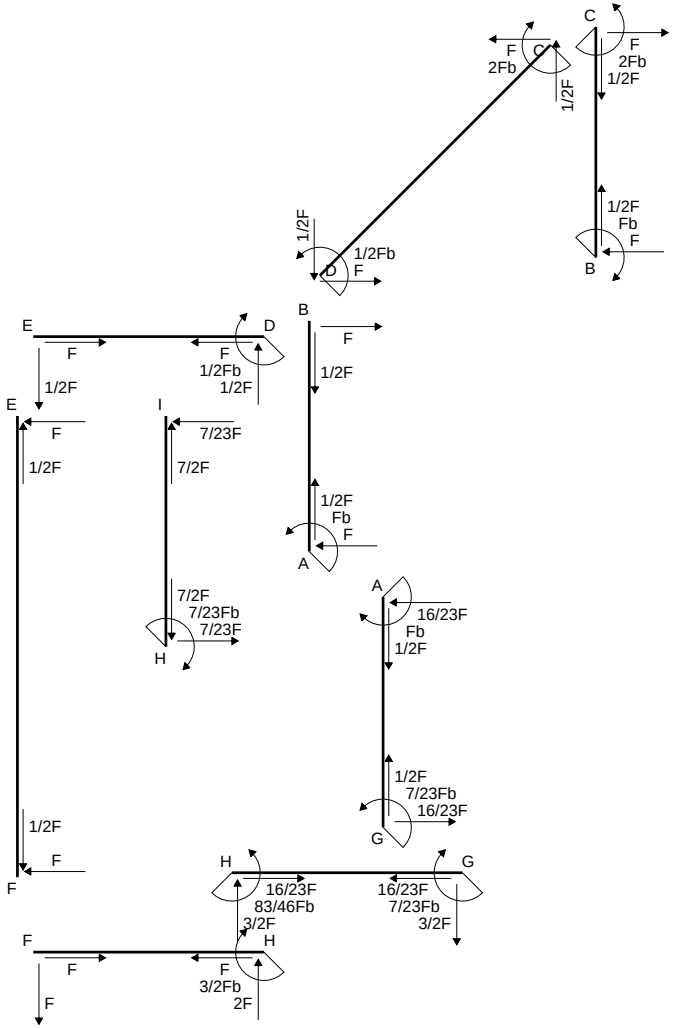
C
F
2Fb
C
1/2F
F
2Fb
1/2F
1/2F
1/2F
Fb
F
B
1/2F
1/2Fb
F
D
E
F
D
F
1/2Fb
1/2F
B
F
1/2F
E
F
1/2F
I
7/23F
7/2F
1/2F
Fb
F
A
7/2F
7/23Fb
7/23F
H
A
16/23F
Fb
1/2F
1/2F
7/23Fb
16/23F
G
1/2F
F
F
H
16/23F
83/46Fb
3/2F
G
16/23F
7/23Fb
3/2F
F
H
F
F
F
3/2Fb
2F
F

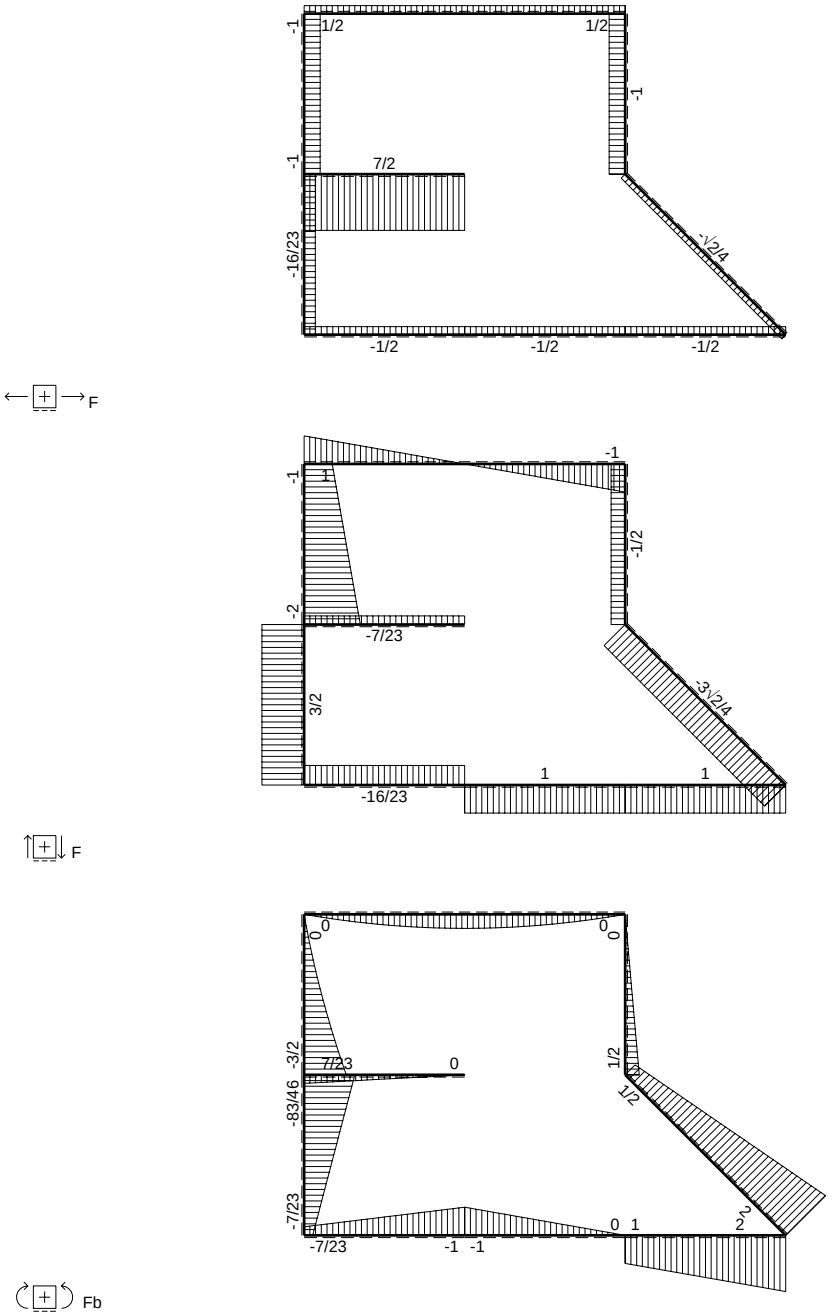
-1
1/2
1/2
-1
-1
7/2
-16/23
-1/2
-1/2
-1/2
-1/2
F
-1
-1
-1/2
-2
-7/23
3/2
-3/2
1
1
-16/23
F
0
0
0
-3/2
7/23
0
1/2
1/2
-83/46
-7/23
0
1
2
-7/23
-1
-1
Fb

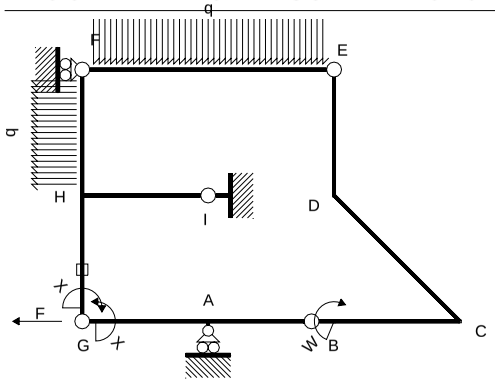

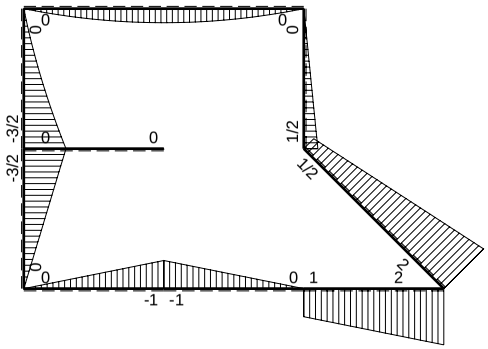

M_0 flessione da carichi assegnati

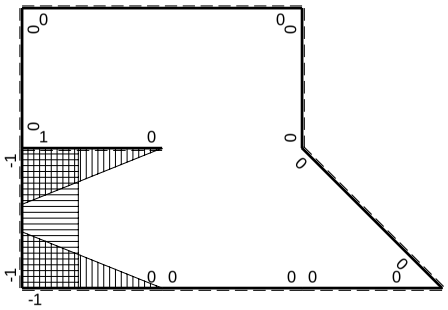

M_x flessione da iperstatica X=1

Quadro contributi PLV per iperstatica $X=W_{GA}$

→	$M_x(x)$	$M_0(x)$	M_xM_0	M_xM_x	$\int M_xM_0/EJdx$	$\int XM_xM_x/EJdx$
AB b	0	-Fb+Fx	0	0	0	0
BA b	0	Fx	0	0		
BC b	0	Fb+Fx	0	0	0	0
CB b	0	-2Fb+Fx	0	0		
CD √2b	0	2Fb-3√2/4Fx	0	0	0	0
DE b	0	1/2Fb-1/2Fx	0	0	0	0
ED b	0	-1/2Fx	0	0		
EF 2b	0	$-Fx+1/2qx^2$	0	0	0	0
FE 2b	0	$Fx-1/2qx^2$	0	0		
GA b	-1+x/b	-Fx	$Fx-Fx^2/b$	$1-2x/b+x^2/b^2$	$1/6Fb^2/EJ$	1/3Xb/EJ
AG b	x/b	Fb-Fx	$Fx-Fx^2/b$	x^2/b^2		
FH b	0	$-Fx-1/2qx^2$	0	0	0	0
HF b	0	$3/2Fb-2Fx+1/2qx^2$	0	0		
HI b	1-x/b	0	0	$1-2x/b+x^2/b^2$	0	1/3Xb/EJ
IH b	-x/b	0	0	x^2/b^2		
HG b	-1	-3/2Fb+3/2Fx	3/2Fb-3/2Fx	1	$3/4Fb^2/EJ$	Xb/EJ
GH b	1	3/2Fx	3/2Fx	1		
HG	elongazione asta $N_{1HG}\varepsilon_{HG}L_{HG}$				$-Fb^2/EJ$	
A	molla nodo $-V_{1A}(V_{0A}+XV_{1A})/k_A$				$-1/2Fb^2/EJ$	1/4Xb/EJ
	totali				$-7/12Fb^2/EJ$	23/12Xb/EJ
	iperstatica $X=W_{GA}$				7/23Fb	

Sviluppi di calcolo iperstatica

$L^{XX}_{GA} = \int_o^b (1 - 2\,x/b + x^2/b^2)\ 1/EJ\ dx = [\,x - x^2/b + 1/3\,x^3/b^2\,]_o^b\ 1/EJ$

$= (\,b - b + 1/3\,b\,)\ 1/EJ\ = 1/3\ b/EJ$

$L^{XX}_{AG} = \int_o^b (\,x^2/b^2\,)\ 1/EJ\ dx = [1/3\,x^3/b^2\,]_o^b\ 1/EJ$

$= (1/3\,b\,)\ 1/EJ\ = 1/3\ b/EJ$

$L^{XX}_{HI} = \int_o^b (1 - 2\,x/b + x^2/b^2)\ 1/EJ\ dx = [\,x - x^2/b + 1/3\,x^3/b^2\,]_o^b\ 1/EJ$

$= (\,b - b + 1/3\,b\,)\ 1/EJ\ = 1/3\ b/EJ$

$L^{XX}_{IH} = \int_o^b (\,x^2/b^2\,)\ 1/EJ\ dx = [1/3\,x^3/b^2\,]_o^b\ 1/EJ$

$= (1/3\,b\,)\ 1/EJ\ = 1/3\ b/EJ$

$L^{XX}_{HG} = \int_o^b (1)\ 1/EJ\ dx = [\,x\,]_o^b\ 1/EJ$

$= (\,b\,)\ 1/EJ\ = b/EJ$

$L^{XX}_{GH} = \int_o^b (1)\ 1/EJ\ dx = [\,x\,]_o^b\ 1/EJ$

$= (\,b\,)\ 1/EJ\ = b/EJ$

$L^{Xo}_{GA} = \int_o^b (\,x/b - x^2/b^2\,)\ Fb\ 1/EJ\ dx = [1/2\,x^2/b - 1/3\,x^3/b^2\,]_o^b\ Fb\ 1/EJ$

$= (1/2\,b - 1/3\,b\,)\ Fb\ 1/EJ\ = 1/6\ Fb^2/EJ$

$L^{Xo}_{AG} = \int_o^b (\,x/b - x^2/b^2\,)\ Fb\ 1/EJ\ dx = [1/2\,x^2/b - 1/3\,x^3/b^2\,]_o^b\ Fb\ 1/EJ$

$= (1/2\,b - 1/3\,b\,)\ Fb\ 1/EJ\ = 1/6\ Fb^2/EJ$

$L^{Xo}_{HG} = \int_o^b (3/2 - 3/2\,x/b\,)\ Fb\ 1/EJ\ dx - 1\ \ (-1)\ \ (-1)\ \ Fb^2/EJ$

$= [3/2\,x - 3/4\,x^2/b\,]_o^b\ Fb\ 1/EJ\ - 1\ \ (-1)\ \ (-1)\ \ Fb^2/EJ$

$= (3/2\,b - 3/4\,b\,)\ Fb\ 1/EJ\ - 1\ \ (-1)\ \ (-1)\ \ Fb^2/EJ = -1/4\ \ Fb^2/EJ$

$L^{Xo}_{GH} = \int_o^b (3/2\,x/b\,)\ Fb\ 1/EJ\ dx - 1\ \ (-1)\ \ (-1)\ \ Fb^2/EJ = [3/4\,x^2/b\,]_o^b\ Fb\ 1/EJ\ - 1\ \ (-1)\ \ (-1)\ \ Fb^2/EJ$

$= (3/4\,b\,)\ Fb\ 1/EJ\ - 1\ \ (-1)\ \ (-1)\ \ Fb^2/EJ = -1/4\ \ Fb^2/EJ$

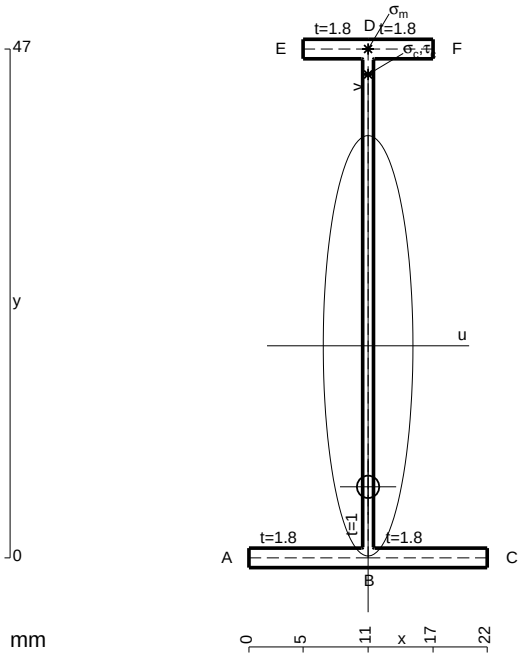

A = 108.2 mm^2
J_u = 40796. mm^4
J_v = 1856. mm^4
J_t = 81.76 mm^4
y_o = -13.03 mm
y_g = 19.59 mm
N = -330. N
T_y = -660. N
M_x = -316800. Nmm
x_m = 11. mm
y_m = 47. mm
v_m = 27.41 mm
$\sigma_m = N/A - Mv/J_u$ = 209.8 N/mm^2
y_c = 2. mm
u_c = -11. mm
v_c = -17.59 mm
$\sigma_c = N/A - Mv/J_u$ = 209.8 N/mm^2
$\tau_c = TS^*/tJ_u$ = 9.578 N/mm^2
$\tau_g = TS^*/tJ_u$ = 9.578 N/mm^2
t_c = 330. mm
$\sigma_o = \sqrt{\sigma^2 + 3\tau^2}$ = 210.5 N/mm^2

ESΣ05.xxxx.196

@ Adolfo Zavelani Rossi, Politecnico di Milano, vers.27.03.13 01.12.25

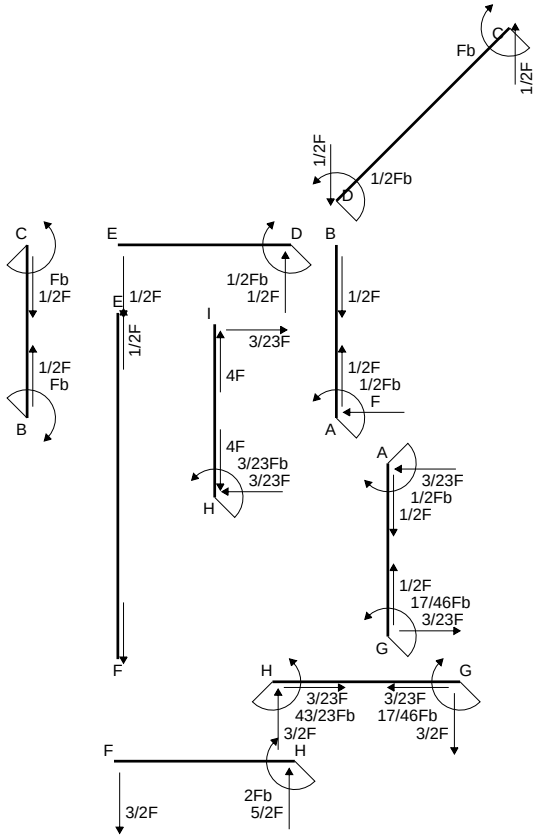
C
Fb
1/2F
1/2F
Fb
B
E
D
1/2Fb
1/2F
E 1/2F
1/2F
I
3/23F
4F
4F
3/23Fb
3/23F
H
B
1/2F
1/2F
1/2Fb
F
A
A
3/23F
1/2Fb
1/2F
1/2F
17/46Fb
3/23F
G
F
H
G
3/23F
43/23Fb
3/2F
3/23F
17/46Fb
3/2F
F
H
2Fb
5/2F
3/2F
Fb
C
1/2F
1/2F
1/2Fb
D

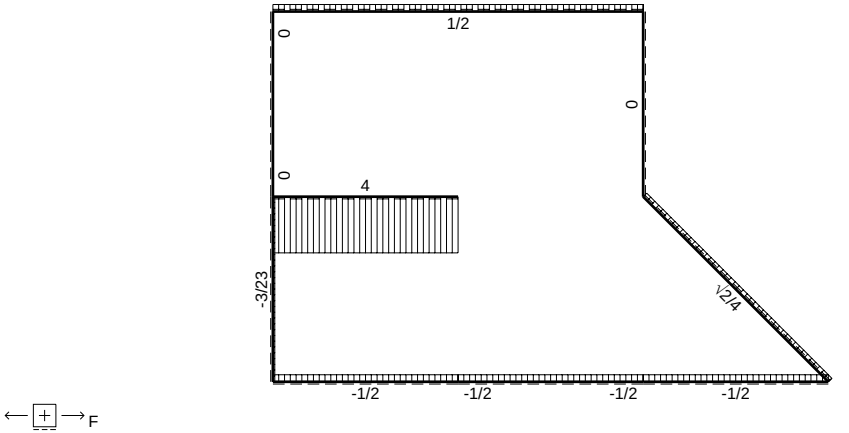
1/2
0
0
0
4
-3/23
√2/4
-1/2
-1/2
-1/2
-1/2
F

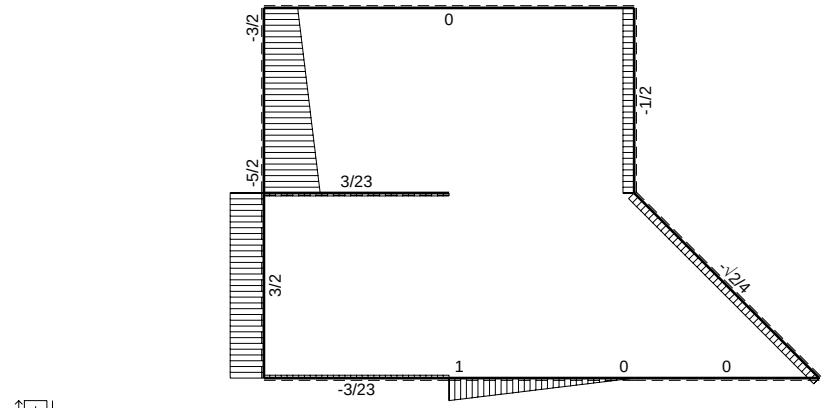
-3/2
0
-1/2
-5/2
3/23
-√2/4
3/2
1
0
0
-3/23
F

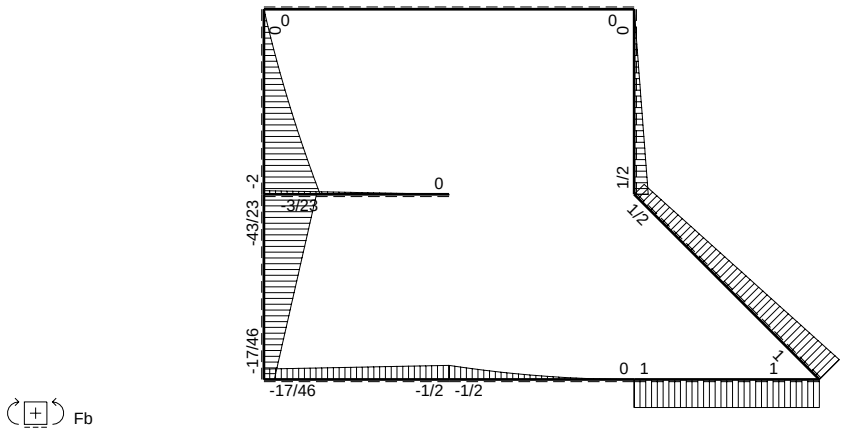
0
0
0
-2
0
1/2
-3/23
1/2
-43/23
-17/46
0 1
1
-1
-17/46
-1/2 -1/2
Fb

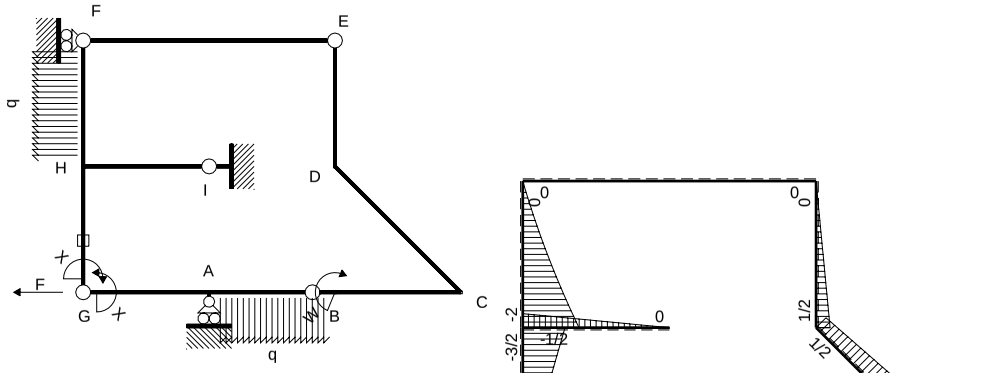

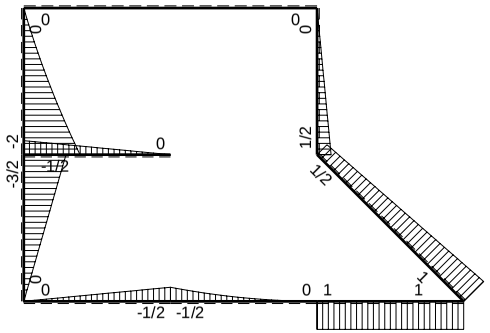

M_0 flessione da carichi assegnati

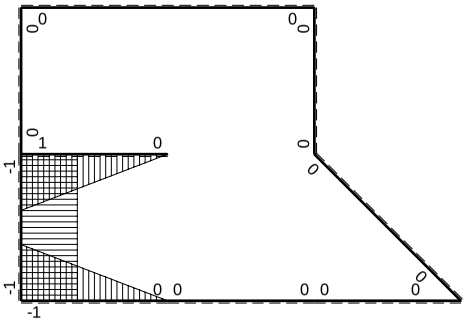

M_x flessione da iperstatica X=1

Quadro contributi PLV per iperstatica $X=W_{GA}$

→	$M_x(x)$	$M_0(x)$	M_xM_0	M_xM_x	$\int M_xM_0/EJdx$	$\int XM_xM_x/EJdx$
AB b	0	$-1/2Fb+Fx-1/2qx^2$	0	0	0	0
BA b	0	$1/2qx^2$	0	0		
BC b	0	Fb	0	0	0	0
CB b	0	-Fb	0	0		
CD $\sqrt{2}b$	0	$Fb-\sqrt{2}/4Fx$	0	0	0	0
DE b	0	1/2Fb-1/2Fx	0	0	0	0
ED b	0	-1/2Fx	0	0		
EF 2b	0	0	0	0	0	0
FE 2b	0	0	0	0		
GA b	-1+x/b	-1/2Fx	$1/2Fx-1/2Fx^2/b$	$1-2x/b+x^2/b^2$	$1/12Fb^2/EJ$	1/3Xb/EJ
AG b	x/b	1/2Fb-1/2Fx	$1/2Fx-1/2Fx^2/b$	x^2/b^2		
FH b	0	$-3/2Fx-1/2qx^2$	0	0	0	0
HF b	0	$2Fb-5/2Fx+1/2qx^2$	0	0		
HI b	1-x/b	-1/2Fb+1/2Fx	$-1/2Fb+Fx-1/2Fx^2/b$	$1-2x/b+x^2/b^2$	$-1/6Fb^2/EJ$	1/3Xb/EJ
IH b	-x/b	1/2Fx	$-1/2Fx^2/b$	x^2/b^2		
HG b	-1	-3/2Fb+3/2Fx	3/2Fb-3/2Fx	1	$3/4Fb^2/EJ$	Xb/EJ
GH b	1	3/2Fx	3/2Fx	1		
HG	elongazione asta $N_{1HG}\varepsilon_{HG}L_{HG}$				$-Fb^2/EJ$	
A	molla nodo $-V_{1A}(V_{0A}+XV_{1A})/k_A$				$-3/8Fb^2/EJ$	1/4Xb/EJ
	totali				$-17/24Fb^2/EJ$	23/12Xb/EJ
	iperstatica $X=W_{GA}$				17/46Fb	

Sviluppi di calcolo iperstatica

$L^{XX}_{GA} = \int_o^b (1 - 2\,x/b + x^2/b^2)\ 1/EJ\ dx = [\,x - x^2/b + 1/3\,x^3/b^2\,]_o^b\ 1/EJ$

$= (\,b - b + 1/3\,b\,)\ 1/EJ\ = 1/3\ b/EJ$

$L^{XX}_{AG} = \int_o^b (\,x^2/b^2\,)\ 1/EJ\ dx = [1/3\,x^3/b^2\,]_o^b\ 1/EJ$

$= (1/3\,b\,)\ 1/EJ\ = 1/3\ b/EJ$

$L^{XX}_{HI} = \int_o^b (1 - 2\,x/b + x^2/b^2)\ 1/EJ\ dx = [\,x - x^2/b + 1/3\,x^3/b^2\,]_o^b\ 1/EJ$

$= (\,b - b + 1/3\,b\,)\ 1/EJ\ = 1/3\ b/EJ$

$L^{XX}_{IH} = \int_o^b (\,x^2/b^2\,)\ 1/EJ\ dx = [1/3\,x^3/b^2\,]_o^b\ 1/EJ$

$= (1/3\,b\,)\ 1/EJ\ = 1/3\ b/EJ$

$L^{XX}_{HG} = \int_o^b (1)\ 1/EJ\ dx = [\,x\,]_o^b\ 1/EJ$

$= (\,b\,)\ 1/EJ\ =\ b/EJ$

$L^{XX}_{GH} = \int_o^b (1)\ 1/EJ\ dx = [\,x\,]_o^b\ 1/EJ$

$= (\,b\,)\ 1/EJ\ =\ b/EJ$

$L^{Xo}_{GA} = \int_o^b (1/2\,x/b - 1/2\,x^2/b^2)\ Fb\ 1/EJ\ dx = [1/4\,x^2/b - 1/6\,x^3/b^2\,]_o^b\ Fb\ 1/EJ$

$= (1/4\,b - 1/6\,b\,)\ Fb\ 1/EJ\ = 1/12\ Fb^2/EJ$

$L^{Xo}_{AG} = \int_o^b (1/2\,x/b - 1/2\,x^2/b^2)\ Fb\ 1/EJ\ dx = [1/4\,x^2/b - 1/6\,x^3/b^2\,]_o^b\ Fb\ 1/EJ$

$= (1/4\,b - 1/6\,b\,)\ Fb\ 1/EJ\ = 1/12\ Fb^2/EJ$

$L^{Xo}_{HI} = \int_o^b (-1/2 + x/b - 1/2\,x^2/b^2)\ Fb\ 1/EJ\ dx = [-1/2\,x + 1/2\,x^2/b - 1/6\,x^3/b^2\,]_o^b\ Fb\ 1/EJ$

$= (-1/2\,b + 1/2\,b - 1/6\,b\,)\ Fb\ 1/EJ\ = -1/6\ Fb^2/EJ$

$L^{Xo}_{IH} = \int_o^b (-1/2\,x^2/b^2)\ Fb\ 1/EJ\ dx = [-1/6\,x^3/b^2\,]_o^b\ Fb\ 1/EJ$

$= (-1/6\,b\,)\ Fb\ 1/EJ\ = -1/6\ Fb^2/EJ$

$L^{Xo}_{HG} = \int_o^b (3/2 - 3/2\,x/b\,)\ Fb\ 1/EJ\ dx - 1\ \ (-1)\ \ (-1)\ \ Fb^2/EJ$

$= [3/2\,x - 3/4\,x^2/b\,]_o^b\ Fb\ 1/EJ\ -\ 1\ \ (-1)\ \ (-1)\ \ Fb^2/EJ$

$= (3/2\,b - 3/4\,b\,)\ Fb\ 1/EJ\ -\ 1\ \ (-1)\ \ (-1)\ \ Fb^2/EJ = -1/4\ \ Fb^2/EJ$

$L^{Xo}_{GH} = \int_o^b (3/2\,x/b\,)\ Fb\ 1/EJ\ dx - 1\ \ (-1)\ \ (-1)\ \ Fb^2/EJ = [3/4\,x^2/b\,]_o^b\ Fb\ 1/EJ\ -\ 1\ \ (-1)\ \ (-1)\ \ Fb^2/EJ$

$= (3/4\,b\,)\ Fb\ 1/EJ\ -\ 1\ \ (-1)\ \ (-1)\ \ Fb^2/EJ = -1/4\ \ Fb^2/EJ$

PROCEDIMENTO E RISULTATI Nome: ESΣ05.xxxx.197

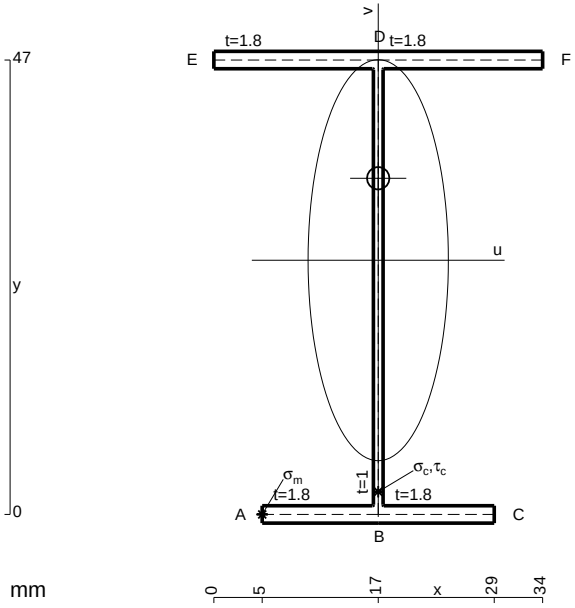

A = 151.4 mm^2
J_u = 65125. mm^4
J_v = 7969. mm^4
J_t = 128.4 mm^4
y_o = 8.477 mm
y_g = 26.29 mm
T_y = -1000. N
M_x = -544000. Nmm
x_m = 5. mm
u_m = -12. mm
v_m = -26.29 mm
$\sigma_m = -Mv/J_u$ = -219.6 N/mm^2
x_c = 17. mm
v_c = -26.29 mm
$\sigma_c = -Mv/J_u$ = -219.6 N/mm^2
$\tau_c = TS^*/tJ_u$ = 17.44 N/mm^2
$\tau_g = TS^*/tJ_u$ = 17.44 N/mm^2
t_c = 400. mm
$\sigma_o = \sqrt{\sigma^2 + 3\tau^2}$ = 221.7 N/mm^2

@ Adolfo Zavelani Rossi, Politecnico di Milano, vers.27.03.13 01.12.25

ESΣ05.xxxx.197

@ Adolfo Zavelani Rossi, Politecnico di Milano, vers.27.03.13 01.12.25

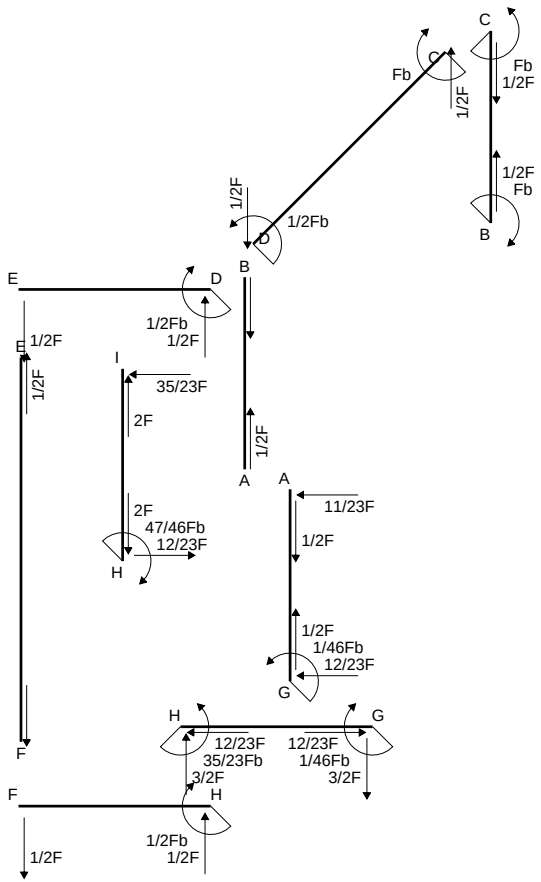
C
Fb
Fb
1/2F
1/2F
1/2F
Fb
B
1/2F
1/2Fb
D
B
E
D
1/2Fb
1/2F
E
1/2F
1/2F
I
35/23F
2F
1/2F
A
A
11/23F
2F
47/46Fb
12/23F
H
1/2F
1/2F
1/46Fb
12/23F
G
H
G
12/23F
35/23Fb
3/2F
12/23F
1/46Fb
3/2F
F
H
F
1/2Fb
1/2F
1/2F

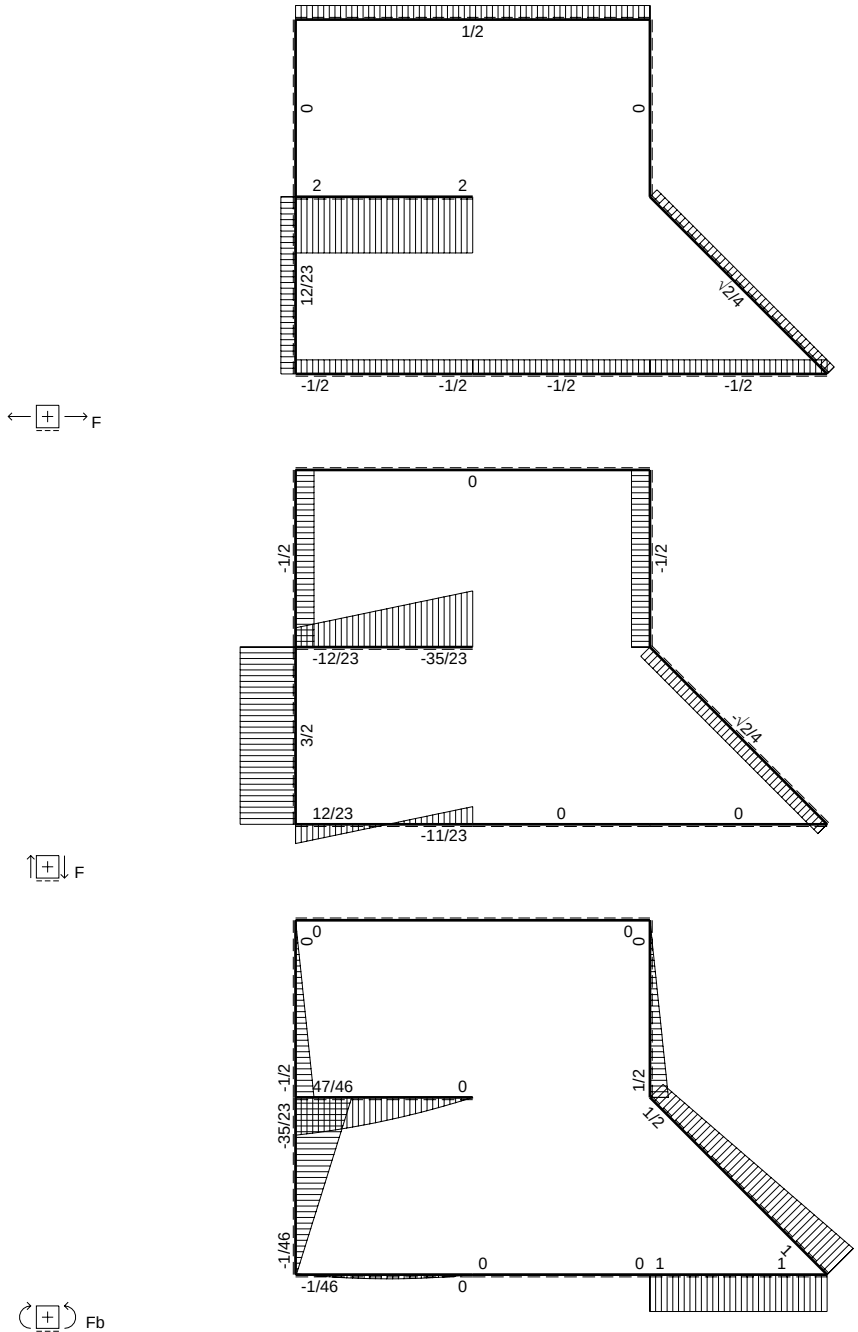
1/2
0
0
2
2
12/23
1/2/4
-1/2
-1/2
-1/2
-1/2
F
0
-1/2
-1/2
-12/23
-35/23
-1/2/4
3/2
12/23
0
0
-11/23
F
0
0
0
0
-1/2
47/46
0
1/2
-35/23
1/2
-1/46
0
0
1
1
-1/46
0
Fb

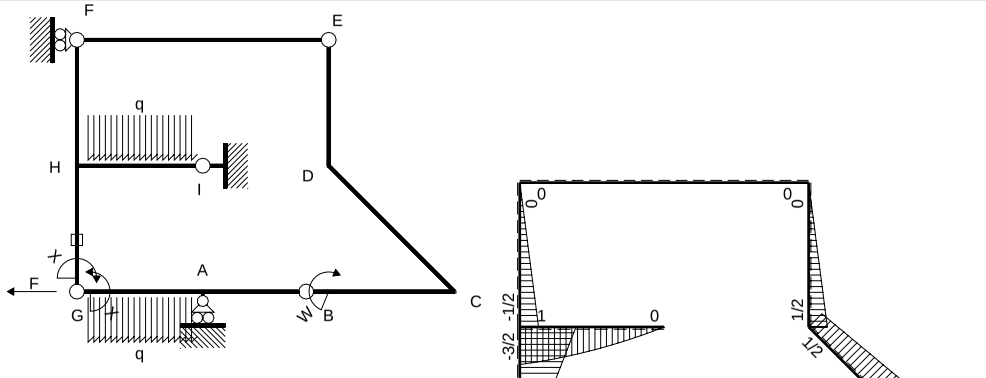

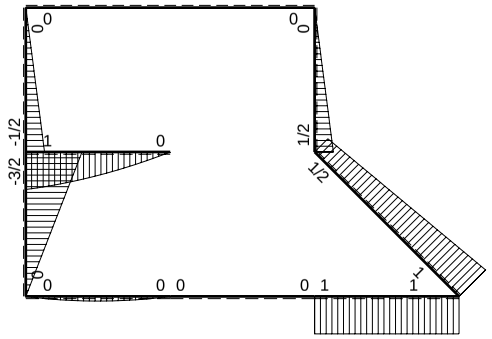

M_0 flessione da carichi assegnati

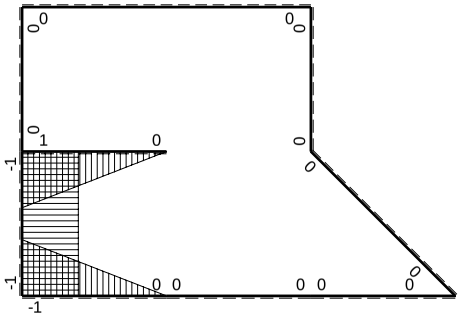

M_x flessione da iperstatica X=1

Quadro contributi PLV per iperstatica $X=W_{GA}$

→	$M_x(x)$	$M_0(x)$	M_xM_0	M_xM_x	$\int M_xM_0/EJdx$	$\int XM_xM_x/EJdx$
AB b	0	0	0	0	0	0
BA b	0	0	0	0		
BC b	0	Fb	0	0	0	0
CB b	0	-Fb	0	0		
CD √2b	0	Fb-√2/4Fx	0	0	0	0
DE b	0	1/2Fb-1/2Fx	0	0	0	0
ED b	0	-1/2Fx	0	0		
EF 2b	0	0	0	0	0	0
FE 2b	0	0	0	0		
GA b	-1+x/b	$1/2Fx-1/2qx^2$	$-1/2Fx+Fx^2/b-1/2qx^3/b$	$1-2x/b+x^2/b^2$	$-1/24Fb^2/EJ$	1/3Xb/EJ
AG b	x/b	$-1/2Fx+1/2qx^2$	$-1/2Fx^2/b+1/2qx^3/b$	x^2/b^2		
FH b	0	-1/2Fx	0	0	0	0
HF b	0	1/2Fb-1/2Fx	0	0		
HI b	1-x/b	$Fb-1/2Fx-1/2qx^2$	$Fb-3/2Fx+1/2qx^3/b$	$1-2x/b+x^2/b^2$	$3/8Fb^2/EJ$	1/3Xb/EJ
IH b	-x/b	$-3/2Fx+1/2qx^2$	$3/2Fx^2/b-1/2qx^3/b$	x^2/b^2		
HG b	-1	-3/2Fb+3/2Fx	3/2Fb-3/2Fx	1	$3/4Fb^2/EJ$	Xb/EJ
GH b	1	3/2Fx	3/2Fx	1		
HG	elongazione asta $N_{1HG}\varepsilon_{HG}L_{HG}$				$-Fb^2/EJ$	
A	molla nodo $-V_{1A}(V_{0A}+XV_{1A})/k_A$				$-1/8Fb^2/EJ$	1/4Xb/EJ
	totali				$-1/24Fb^2/EJ$	23/12Xb/EJ
	iperstatica $X=W_{GA}$				1/46Fb	

Sviluppi di calcolo iperstatica

$L^{XX}_{GA} = \int_o^b (1 - 2\,x/b + x^2/b^2)\ 1/EJ\ dx = [\,x - x^2/b + 1/3\,x^3/b^2\,]_o^b\ 1/EJ$

$= (\,b - b + 1/3\,b\,)\ 1/EJ = 1/3\ b/EJ$

$L^{XX}_{AG} = \int_o^b (\,x^2/b^2\,)\ 1/EJ\ dx = [1/3\,x^3/b^2\,]_o^b\ 1/EJ$

$= (1/3\,b\,)\ 1/EJ = 1/3\ b/EJ$

$L^{XX}_{HI} = \int_o^b (1 - 2\,x/b + x^2/b^2)\ 1/EJ\ dx = [\,x - x^2/b + 1/3\,x^3/b^2\,]_o^b\ 1/EJ$

$= (\,b - b + 1/3\,b\,)\ 1/EJ = 1/3\ b/EJ$

$L^{XX}_{IH} = \int_o^b (\,x^2/b^2\,)\ 1/EJ\ dx = [1/3\,x^3/b^2\,]_o^b\ 1/EJ$

$= (1/3\,b\,)\ 1/EJ = 1/3\ b/EJ$

$L^{XX}_{HG} = \int_o^b (1)\ 1/EJ\ dx = [\,x\,]_o^b\ 1/EJ$

$= (\,b\,)\ 1/EJ = b/EJ$

$L^{XX}_{GH} = \int_o^b (1)\ 1/EJ\ dx = [\,x\,]_o^b\ 1/EJ$

$= (\,b\,)\ 1/EJ = b/EJ$

$L^{Xo}_{GA} = \int_o^b (-1/2\,x/b + x^2/b^2 - 1/2\,x^3/b^3)\ Fb\ 1/EJ\ dx = [-1/4\,x^2/b + 1/3\,x^3/b^2 - 1/8\,x^4/b^3\,]_o^b\ Fb\ 1/EJ$

$= (-1/4\,b + 1/3\,b - 1/8\,b\,)\ Fb\ 1/EJ = -1/24\ Fb^2/EJ$

$L^{Xo}_{AG} = \int_o^b (-1/2\,x^2/b^2 + 1/2\,x^3/b^3)\ Fb\ 1/EJ\ dx = [-1/6\,x^3/b^2 + 1/8\,x^4/b^3\,]_o^b\ Fb\ 1/EJ$

$= (-1/6\,b + 1/8\,b\,)\ Fb\ 1/EJ = -1/24\ Fb^2/EJ$

$L^{Xo}_{HI} = \int_o^b (1 - 3/2\,x/b + 1/2\,x^3/b^3)\ Fb\ 1/EJ\ dx = [\,x - 3/4\,x^2/b + 1/8\,x^4/b^3\,]_o^b\ Fb\ 1/EJ$

$= (\,b - 3/4\,b + 1/8\,b\,)\ Fb\ 1/EJ = 3/8\ Fb^2/EJ$

$L^{Xo}_{IH} = \int_o^b (3/2\,x^2/b^2 - 1/2\,x^3/b^3)\ Fb\ 1/EJ\ dx = [1/2\,x^3/b^2 - 1/8\,x^4/b^3\,]_o^b\ Fb\ 1/EJ$

$= (1/2\,b - 1/8\,b\,)\ Fb\ 1/EJ = 3/8\ Fb^2/EJ$

$L^{Xo}_{HG} = \int_o^b (3/2 - 3/2\,x/b\,)\ Fb\ 1/EJ\ dx - 1\ \ (-1)\ \ (-1)\ \ Fb^2/EJ$

$= [3/2\,x - 3/4\,x^2/b\,]_o^b\ Fb\ 1/EJ\ - 1\ \ (-1)\ \ (-1)\ \ Fb^2/EJ$

$= (3/2\,b - 3/4\,b\,)\ Fb\ 1/EJ\ - 1\ \ (-1)\ \ (-1)\ \ Fb^2/EJ = -1/4\ \ Fb^2/EJ$

$L^{Xo}_{GH} = \int_o^b (3/2\,x/b\,)\ Fb\ 1/EJ\ dx - 1\ \ (-1)\ \ (-1)\ \ Fb^2/EJ = [3/4\,x^2/b\,]_o^b\ Fb\ 1/EJ\ - 1\ \ (-1)\ \ (-1)\ \ Fb^2/EJ$

$= (3/4\,b\,)\ Fb\ 1/EJ\ - 1\ \ (-1)\ \ (-1)\ \ Fb^2/EJ = -1/4\ \ Fb^2/EJ$

PROCEDIMENTO E RISULTATI Nome: ESΣ05.xxxx.198

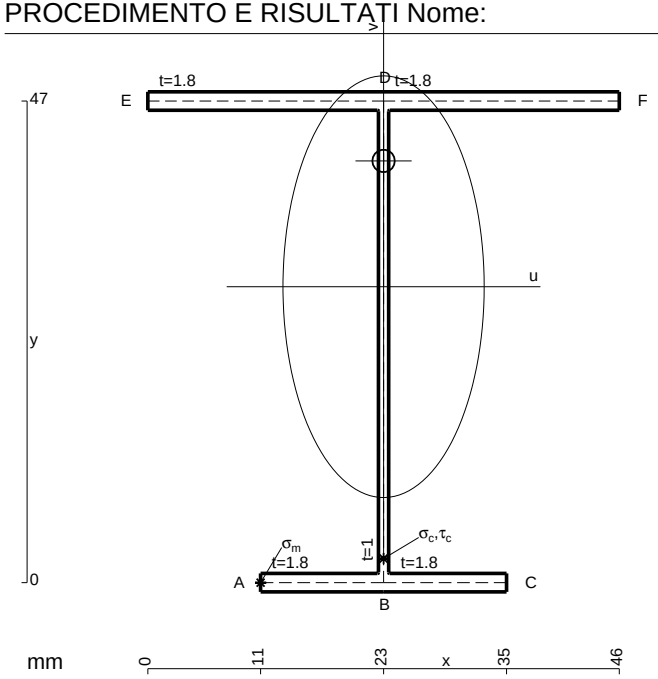

A = 173. mm^2
J_u = 73230. mm^4
J_v = 16674. mm^4
J_t = 151.7 mm^4
y_o = 12.28 mm
y_g = 28.88 mm
N = 282.8 N
T_y = -282.8 N
M_x = 576000. Nmm
x_m = 11. mm
u_m = -12. mm
v_m = -28.88 mm
$\sigma_m = N/A - Mv/J_u$ = 228.8 N/mm^2
x_c = 23. mm
v_c = -28.88 mm
$\sigma_c = N/A - Mv/J_u$ = 228.8 N/mm^2
$\tau_c = TS^*/tJ_u$ = 4.819 N/mm^2
$\tau_g = TS^*/tJ_u$ = 4.819 N/mm^2
t_c = 800. mm
$\sigma_o = \sqrt{\sigma^2 + 3\tau^2}$ = 228.9 N/mm^2

@ Adolfo Zavelani Rossi, Politecnico di Milano, vers.27.03.13 01.12.25

ESΣ05.xxxx.198

@ Adolfo Zavelani Rossi, Politecnico di Milano, vers.27.03.13 01.12.25

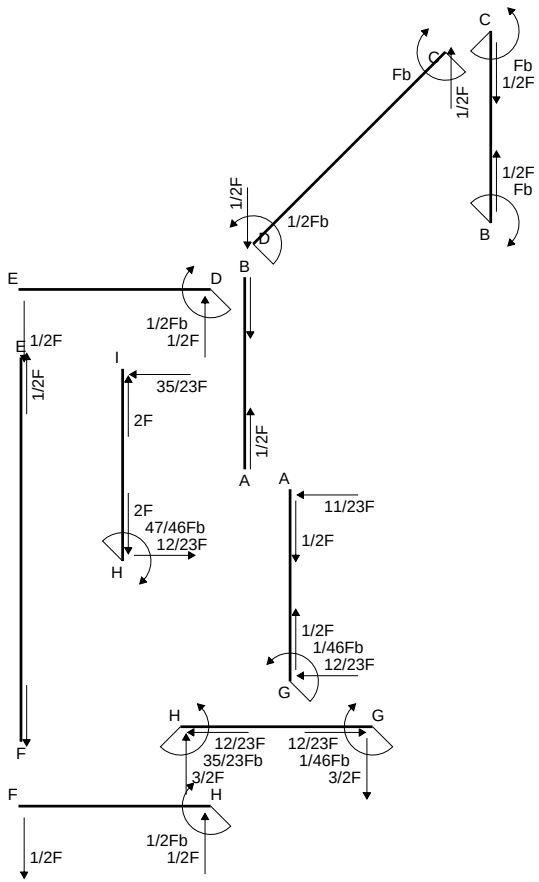
C
Fb
1/2F
Fb
1/2F
1/2F
Fb
1/2F
1/2Fb
D
B
E
D
1/2Fb
1/2F
E
1/2F
1/2F
I
35/23F
2F
1/2F
A
A
11/23F
2F
47/46Fb
12/23F
H
1/2F
1/2F
1/46Fb
12/23F
G
H
G
12/23F
35/23Fb
3/2F
12/23F
1/46Fb
3/2F
F
F
H
1/2Fb
1/2F
1/2F

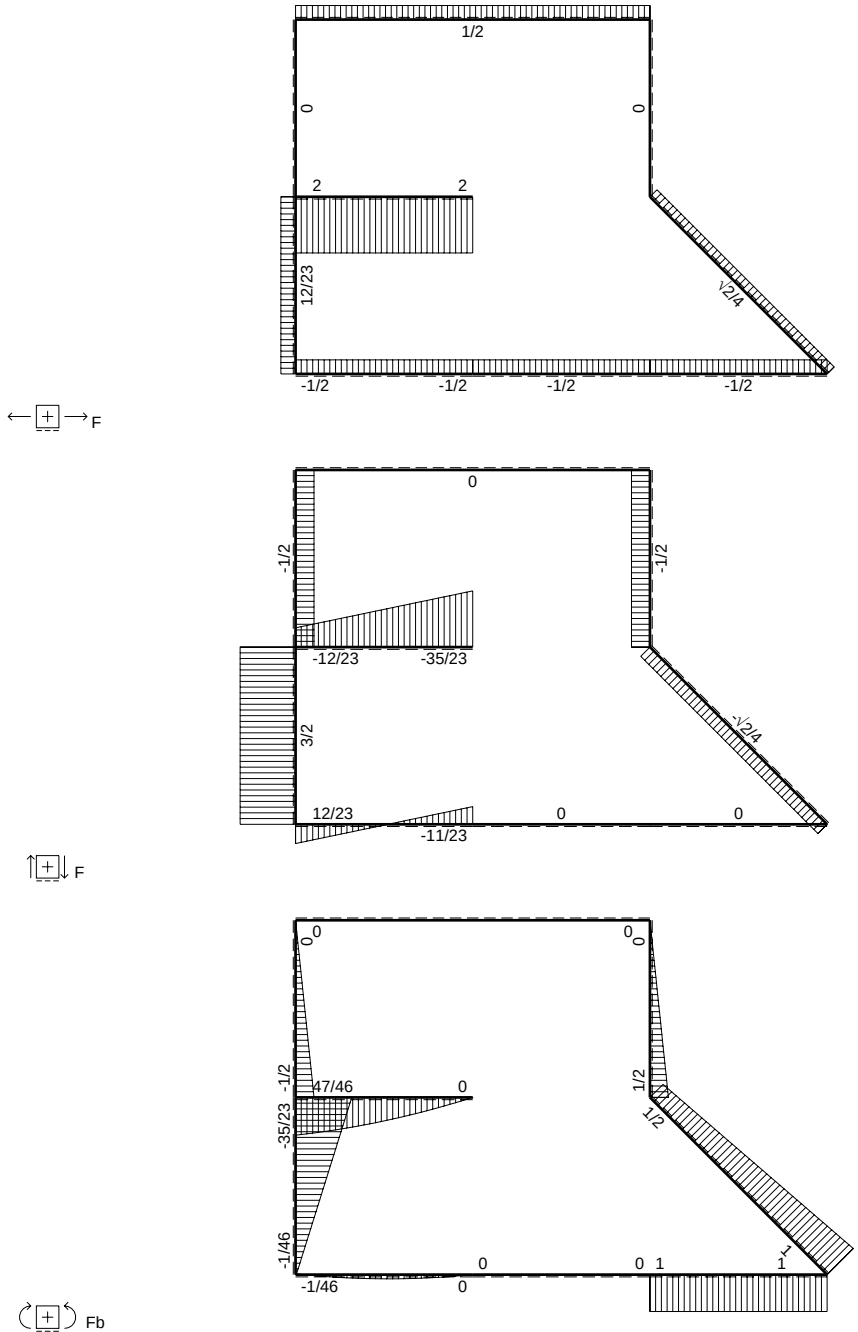
1/2
0
0
2
2
12/23
√2/4
-1/2
-1/2
-1/2
-1/2
F
0
-1/2
-1/2
-12/23
-35/23
3/2
-√2/4
12/23
0
0
-11/23
F
0
0
0
0
-1/2
47/46
0
1/2
-35/23
1/2
-1/46
0
0
1
1
-1/46
0
Fb

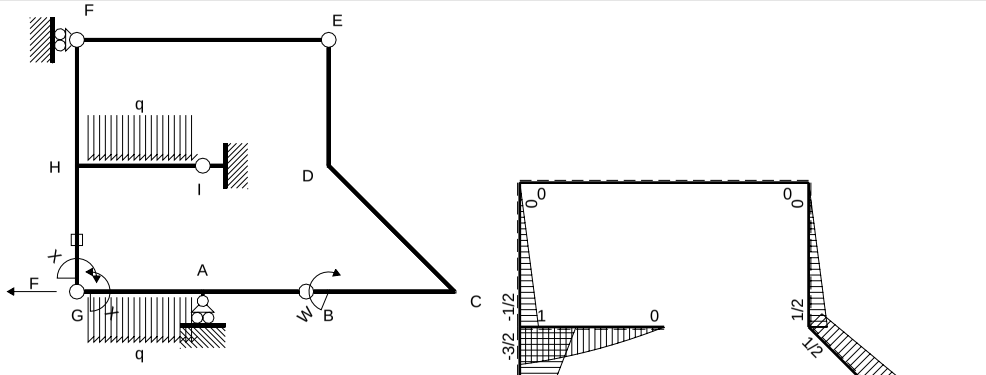

M_0 flessione da carichi assegnati

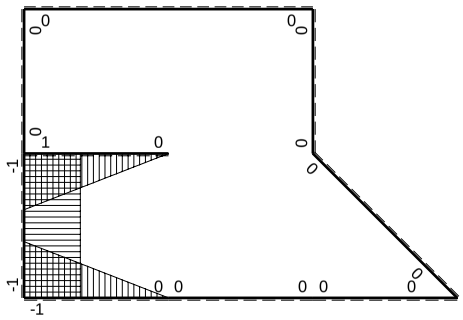

M_x flessione da iperstatica X=1

Quadro contributi PLV per iperstatica $X=W_{GA}$

→	$M_x(x)$	$M_0(x)$	M_xM_0	M_xM_x	$\int M_xM_0/EJdx$	$\int XM_xM_x/EJdx$
AB b	0	0	0	0	0	0
BA b	0	0	0	0		
BC b	0	Fb	0	0	0	0
CB b	0	-Fb	0	0		
CD √2b	0	Fb-√2/4Fx	0	0	0	0
DE b	0	1/2Fb-1/2Fx	0	0	0	0
ED b	0	-1/2Fx	0	0		
EF 2b	0	0	0	0	0	0
FE 2b	0	0	0	0		
GA b	-1+x/b	$1/2Fx-1/2qx^2$	$-1/2Fx+Fx^2/b-1/2qx^3/b$	$1-2x/b+x^2/b^2$	$-1/24Fb^2/EJ$	1/3Xb/EJ
AG b	x/b	$-1/2Fx+1/2qx^2$	$-1/2Fx^2/b+1/2qx^3/b$	x^2/b^2		
FH b	0	-1/2Fx	0	0	0	0
HF b	0	1/2Fb-1/2Fx	0	0		
HI b	1-x/b	$Fb-1/2Fx-1/2qx^2$	$Fb-3/2Fx+1/2qx^3/b$	$1-2x/b+x^2/b^2$	$3/8Fb^2/EJ$	1/3Xb/EJ
IH b	-x/b	$-3/2Fx+1/2qx^2$	$3/2Fx^2/b-1/2qx^3/b$	x^2/b^2		
HG b	-1	-3/2Fb+3/2Fx	3/2Fb-3/2Fx	1	$3/4Fb^2/EJ$	Xb/EJ
GH b	1	3/2Fx	3/2Fx	1		
HG	elongazione asta $N_{1HG}\varepsilon_{HG}L_{HG}$				$-Fb^2/EJ$	
A	molla nodo $-V_{1A}(V_{0A}+XV_{1A})/k_A$				$-1/8Fb^2/EJ$	1/4Xb/EJ
	totali				$-1/24Fb^2/EJ$	23/12Xb/EJ
	iperstatica $X=W_{GA}$				1/46Fb	

Sviluppi di calcolo iperstatica

$L^{XX}_{GA} = \int_o^b (1 - 2\,x/b + x^2/b^2)\ 1/EJ\ dx = [\,x - x^2/b + 1/3\,x^3/b^2\,]_o^b\ 1/EJ$

$= (\,b - b + 1/3\,b\,)\ 1/EJ = 1/3\ b/EJ$

$L^{XX}_{AG} = \int_o^b (\,x^2/b^2\,)\ 1/EJ\ dx = [1/3\,x^3/b^2\,]_o^b\ 1/EJ$

$= (1/3\,b\,)\ 1/EJ = 1/3\ b/EJ$

$L^{XX}_{HI} = \int_o^b (1 - 2\,x/b + x^2/b^2)\ 1/EJ\ dx = [\,x - x^2/b + 1/3\,x^3/b^2\,]_o^b\ 1/EJ$

$= (\,b - b + 1/3\,b\,)\ 1/EJ = 1/3\ b/EJ$

$L^{XX}_{IH} = \int_o^b (\,x^2/b^2\,)\ 1/EJ\ dx = [1/3\,x^3/b^2\,]_o^b\ 1/EJ$

$= (1/3\,b\,)\ 1/EJ = 1/3\ b/EJ$

$L^{XX}_{HG} = \int_o^b (1)\ 1/EJ\ dx = [\,x\,]_o^b\ 1/EJ$

$= (\,b\,)\ 1/EJ = b/EJ$

$L^{XX}_{GH} = \int_o^b (1)\ 1/EJ\ dx = [\,x\,]_o^b\ 1/EJ$

$= (\,b\,)\ 1/EJ = b/EJ$

$L^{Xo}_{GA} = \int_o^b (-1/2\,x/b + x^2/b^2 - 1/2\,x^3/b^3)\ Fb\ 1/EJ\ dx = [-1/4\,x^2/b + 1/3\,x^3/b^2 - 1/8\,x^4/b^3\,]_o^b\ Fb\ 1/EJ$

$= (-1/4\,b + 1/3\,b - 1/8\,b\,)\ Fb\ 1/EJ = -1/24\ Fb^2/EJ$

$L^{Xo}_{AG} = \int_o^b (-1/2\,x^2/b^2 + 1/2\,x^3/b^3)\ Fb\ 1/EJ\ dx = [-1/6\,x^3/b^2 + 1/8\,x^4/b^3\,]_o^b\ Fb\ 1/EJ$

$= (-1/6\,b + 1/8\,b\,)\ Fb\ 1/EJ = -1/24\ Fb^2/EJ$

$L^{Xo}_{HI} = \int_o^b (1 - 3/2\,x/b + 1/2\,x^3/b^3)\ Fb\ 1/EJ\ dx = [\,x - 3/4\,x^2/b + 1/8\,x^4/b^3\,]_o^b\ Fb\ 1/EJ$

$= (\,b - 3/4\,b + 1/8\,b\,)\ Fb\ 1/EJ = 3/8\ Fb^2/EJ$

$L^{Xo}_{IH} = \int_o^b (3/2\,x^2/b^2 - 1/2\,x^3/b^3)\ Fb\ 1/EJ\ dx = [1/2\,x^3/b^2 - 1/8\,x^4/b^3\,]_o^b\ Fb\ 1/EJ$

$= (1/2\,b - 1/8\,b\,)\ Fb\ 1/EJ = 3/8\ Fb^2/EJ$

$L^{Xo}_{HG} = \int_o^b (3/2 - 3/2\,x/b\,)\ Fb\ 1/EJ\ dx - 1\ \ (-1)\ \ (-1)\ \ Fb^2/EJ$

$= [3/2\,x - 3/4\,x^2/b\,]_o^b\ Fb\ 1/EJ\ - 1\ \ (-1)\ \ (-1)\ \ Fb^2/EJ$

$= (3/2\,b - 3/4\,b\,)\ Fb\ 1/EJ\ - 1\ \ (-1)\ \ (-1)\ \ Fb^2/EJ = -1/4\ \ Fb^2/EJ$

$L^{Xo}_{GH} = \int_o^b (3/2\,x/b\,)\ Fb\ 1/EJ\ dx - 1\ \ (-1)\ \ (-1)\ \ Fb^2/EJ = [3/4\,x^2/b\,]_o^b\ Fb\ 1/EJ\ - 1\ \ (-1)\ \ (-1)\ \ Fb^2/EJ$

$= (3/4\,b\,)\ Fb\ 1/EJ\ - 1\ \ (-1)\ \ (-1)\ \ Fb^2/EJ = -1/4\ \ Fb^2/EJ$

PROCEDIMENTO E RISULTATI Nome: ESΣ05.xxxx.199

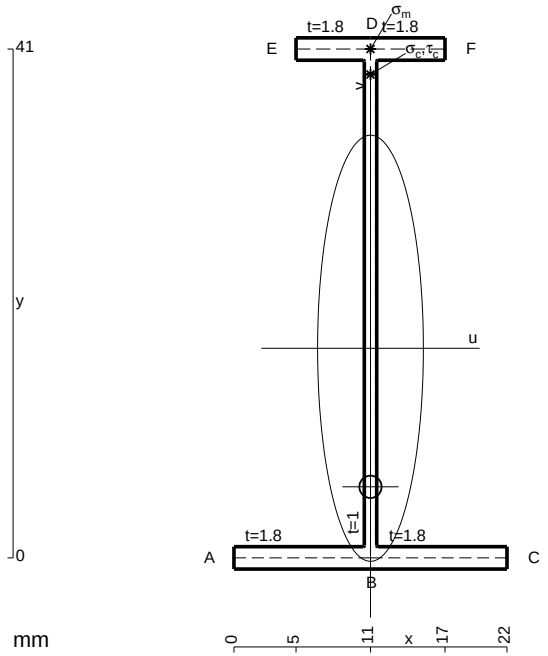

A = 102.2 mm^2
J_u = 30130. mm^4
J_v = 1856. mm^4
J_t = 79.76 mm^4
y_o = -11.16 mm
y_g = 16.89 mm
N = 159.1 N
T_y = -159.1 N
M_x = 297000. Nmm
x_m = 11. mm
y_m = 41. mm
v_m = 24.11 mm
$\sigma_m = N/A - Mv/J_u$ = -236.1 N/mm^2
y_c = 2. mm
u_c = -11. mm
v_c = -14.89 mm
$\sigma_c = N/A - Mv/J_u$ = -236.1 N/mm^2
$\tau_c = TS^*/tJ_u$ = 2.75 N/mm^2
$\tau_g = TS^*/tJ_u$ = 2.75 N/mm^2
t_c = 450. mm
$\sigma_o = \sqrt{\sigma^2 + 3\tau^2}$ = 236.2 N/mm^2

@ Adolfo Zavelani Rossi, Politecnico di Milano, vers.27.03.13 01.12.25

ESΣ05.xxxx.199

@ Adolfo Zavelani Rossi, Politecnico di Milano, vers.27.03.13 01.12.25

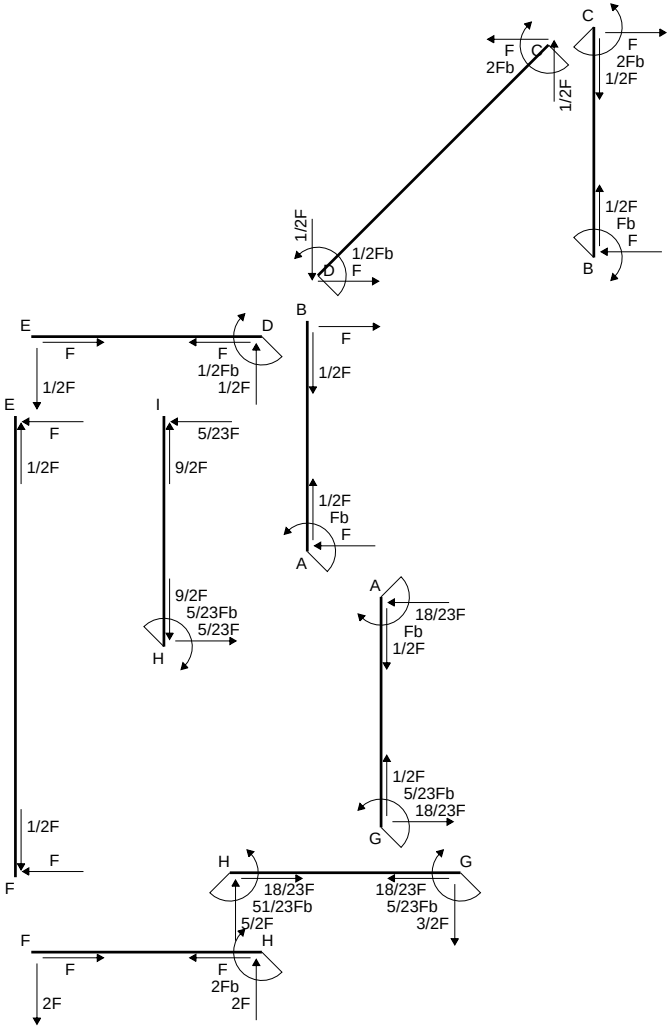
C
F
2Fb
C
1/2F
F
2Fb
1/2F
1/2F
1/2Fb
F
D
1/2F
Fb
F
B
E
D
F
F
1/2Fb
1/2F
B
F
1/2F
E
F
1/2F
I
5/23F
9/2F
1/2F
Fb
F
A
9/2F
5/23Fb
5/23F
H
A
18/23F
Fb
1/2F
1/2F
5/23Fb
18/23F
G
1/2F
F
F
H
18/23F
51/23Fb
5/2F
G
18/23F
5/23Fb
3/2F
F
H
F
F
2Fb
2F
2F

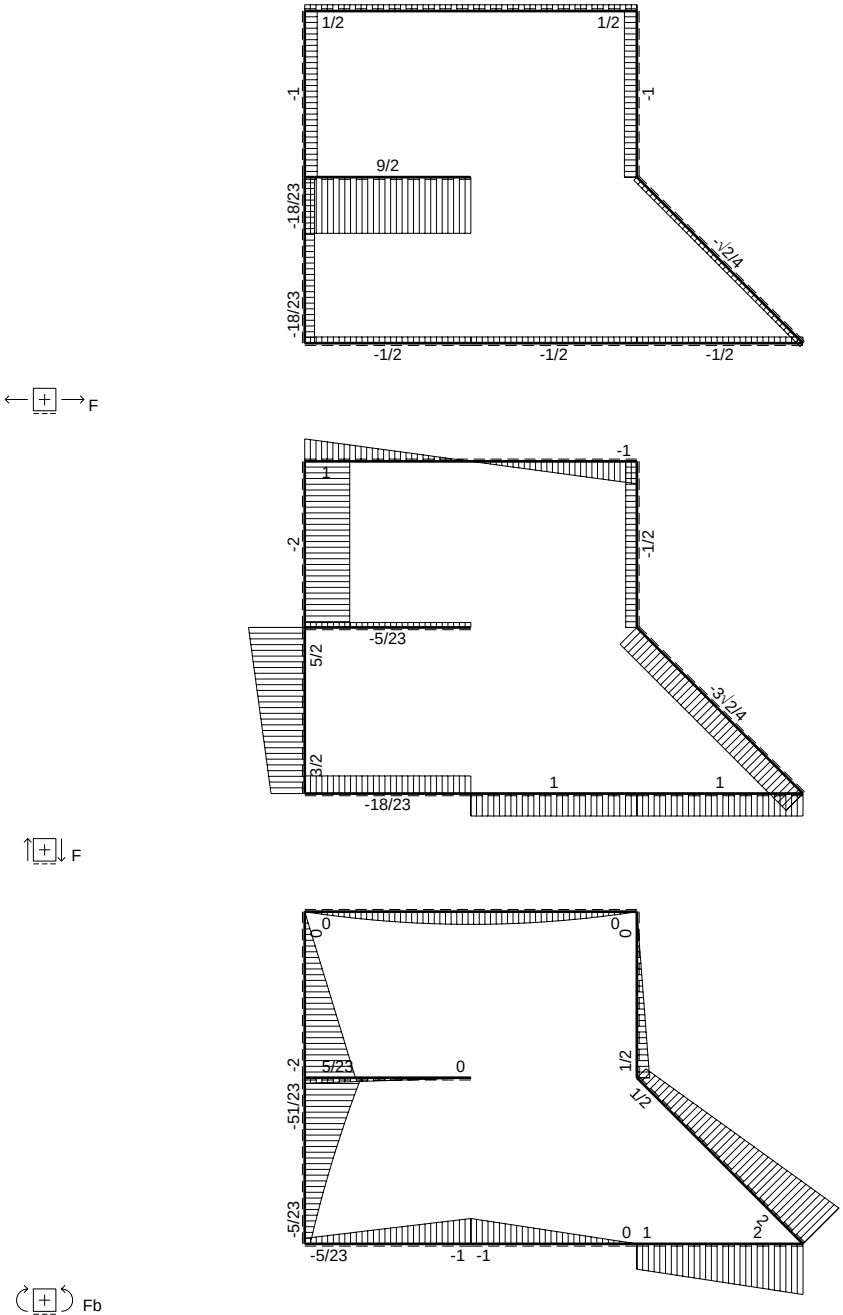
1/2
1/2
-1
-1
9/2
-18/23
-18/23
-√2/4
-1/2
-1/2
-1/2
F
-1
1
-2
-1/2
-5/23
5/2
-√2/4
3/2
1
1
-18/23
F
0
0
0
0
-2
5/23
0
1/2
1/2
-51/23
-5/23
0 1
-5/23
-1 -1
Fb

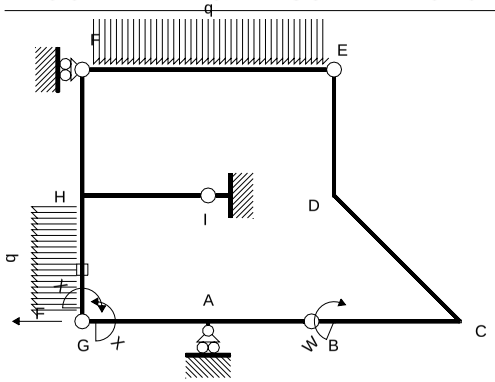

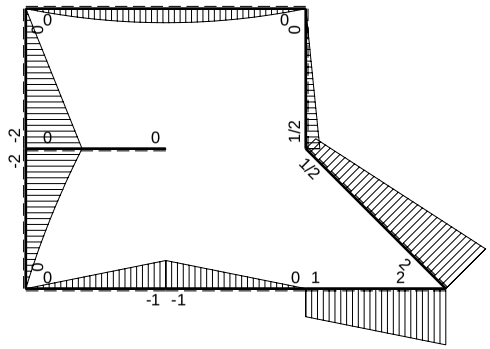

M_0 flessione da carichi assegnati

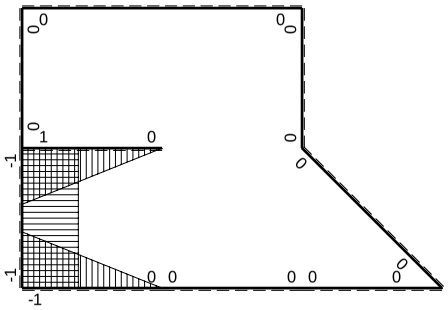

M_x flessione da iperstatica X=1

Quadro contributi PLV per iperstatica $X=W_{GA}$

→	$M_x(x)$	$M_0(x)$	M_xM_0	M_xM_x	$\int M_xM_0/EJdx$	$\int XM_xM_x/EJdx$
AB b	0	-Fb+Fx	0	0	0	0
BA b	0	Fx	0	0		
BC b	0	Fb+Fx	0	0	0	0
CB b	0	-2Fb+Fx	0	0		
CD √2b	0	2Fb-3√2/4Fx	0	0	0	0
DE b	0	1/2Fb-1/2Fx	0	0	0	0
ED b	0	-1/2Fx	0	0		
EF 2b	0	$-Fx+1/2qx^2$	0	0	0	0
FE 2b	0	$Fx-1/2qx^2$	0	0		
GA b	-1+x/b	-Fx	$Fx-Fx^2/b$	$1-2x/b+x^2/b^2$	$1/6Fb^2/EJ$	1/3Xb/EJ
AG b	x/b	Fb-Fx	$Fx-Fx^2/b$	x^2/b^2		
FH b	0	-2Fx	0	0	0	0
HF b	0	2Fb-2Fx	0	0		
HI b	1-x/b	0	0	$1-2x/b+x^2/b^2$	0	1/3Xb/EJ
IH b	-x/b	0	0	x^2/b^2		
HG b	-1	$-2Fb+5/2Fx-1/2qx^2$	$2Fb-5/2Fx+1/2Fx^2/b$	1	$11/12Fb^2/EJ$	Xb/EJ
GH b	1	$3/2Fx+1/2qx^2$	$3/2Fx+1/2Fx^2/b$	1		
HG	elongazione asta $N_{1HG}\varepsilon_{HG}L_{HG}$				$-Fb^2/EJ$	
A	molla nodo $-V_{1A}(V_{0A}+XV_{1A})/k_A$				$-1/2Fb^2/EJ$	1/4Xb/EJ
	totali				$-5/12Fb^2/EJ$	23/12Xb/EJ
	iperstatica $X=W_{GA}$				5/23Fb	

Sviluppi di calcolo iperstatica

$L^{XX}_{GA} = \int_o^b (1 - 2\,x/b + x^2/b^2)\ 1/EJ\ dx = [\,x - x^2/b + 1/3\,x^3/b^2\,]_o^b\ 1/EJ$

$= (\,b - b + 1/3\,b\,)\ 1/EJ = 1/3\ b/EJ$

$L^{XX}_{AG} = \int_o^b (\,x^2/b^2\,)\ 1/EJ\ dx = [1/3\,x^3/b^2\,]_o^b\ 1/EJ$

$= (1/3\,b\,)\ 1/EJ = 1/3\ b/EJ$

$L^{XX}_{HI} = \int_o^b (1 - 2\,x/b + x^2/b^2)\ 1/EJ\ dx = [\,x - x^2/b + 1/3\,x^3/b^2\,]_o^b\ 1/EJ$

$= (\,b - b + 1/3\,b\,)\ 1/EJ = 1/3\ b/EJ$

$L^{XX}_{IH} = \int_o^b (\,x^2/b^2\,)\ 1/EJ\ dx = [1/3\,x^3/b^2\,]_o^b\ 1/EJ$

$= (1/3\,b\,)\ 1/EJ = 1/3\ b/EJ$

$L^{XX}_{HG} = \int_o^b (1)\ 1/EJ\ dx = [\,x\,]_o^b\ 1/EJ$

$= (\,b\,)\ 1/EJ = b/EJ$

$L^{XX}_{GH} = \int_o^b (1)\ 1/EJ\ dx = [\,x\,]_o^b\ 1/EJ$

$= (\,b\,)\ 1/EJ = b/EJ$

$L^{Xo}_{GA} = \int_o^b (\,x/b - x^2/b^2\,)\ Fb\ 1/EJ\ dx = [1/2\,x^2/b - 1/3\,x^3/b^2\,]_o^b\ Fb\ 1/EJ$

$= (1/2\,b - 1/3\,b\,)\ Fb\ 1/EJ = 1/6\ Fb^2/EJ$

$L^{Xo}_{AG} = \int_o^b (\,x/b - x^2/b^2\,)\ Fb\ 1/EJ\ dx = [1/2\,x^2/b - 1/3\,x^3/b^2\,]_o^b\ Fb\ 1/EJ$

$= (1/2\,b - 1/3\,b\,)\ Fb\ 1/EJ = 1/6\ Fb^2/EJ$

$L^{Xo}_{HG} = \int_o^b (2 - 5/2\,x/b + 1/2\,x^2/b^2\,)\ Fb\ 1/EJ\ dx - 1\ \ (-1)\ \ (-1)\ \ Fb^2/EJ$

$= [\,2\,x - 5/4\,x^2/b + 1/6\,x^3/b^2\,]_o^b\ Fb\ 1/EJ\ - 1\ \ (-1)\ \ (-1)\ \ Fb^2/EJ$

$= (\,2\,b - 5/4\,b + 1/6\,b\,)\ Fb\ 1/EJ\ - 1\ \ (-1)\ \ (-1)\ \ Fb^2/EJ = -1/12\ \ Fb^2/EJ$

$L^{Xo}_{GH} = \int_o^b (3/2\,x/b + 1/2\,x^2/b^2\,)\ Fb\ 1/EJ\ dx - 1\ \ (-1)\ \ (-1)\ \ Fb^2/EJ$

$= [\,3/4\,x^2/b + 1/6\,x^3/b^2\,]_o^b\ Fb\ 1/EJ\ - 1\ \ (-1)\ \ (-1)\ \ Fb^2/EJ$

$= (\,3/4\,b + 1/6\,b\,)\ Fb\ 1/EJ\ - 1\ \ (-1)\ \ (-1)\ \ Fb^2/EJ = -1/12\ \ Fb^2/EJ$

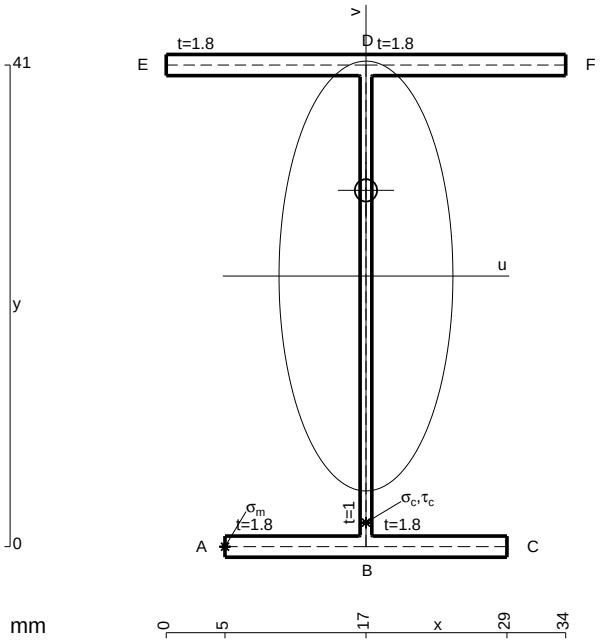

A = 145.4 mm^2
J_u = 48681. mm^4
J_v = 7969. mm^4
J_t = 126.4 mm^4
y_o = 7.294 mm
y_g = 23.04 mm
N = -590. N
T_y = -1180. N
M_x = -413000. Nmm
x_m = 5. mm
u_m = -12. mm
v_m = -23.04 mm
$\sigma_m = N/A - Mv/J_u$ = -199.5 N/mm^2
x_c = 17. mm
v_c = -23.04 mm
$\sigma_c = N/A - Mv/J_u$ = -199.5 N/mm^2
$\tau_c = TS^*/tJ_u$ = 24.12 N/mm^2
$\tau_g = TS^*/tJ_u$ = 24.12 N/mm^2
t_c = 590. mm
$\sigma_o = \sqrt{\sigma^2 + 3\tau^2}$ = 203.8 N/mm^2

ESΣ05.xxxx.200

@ Adolfo Zavelani Rossi, Politecnico di Milano, vers.27.03.13 01.12.25

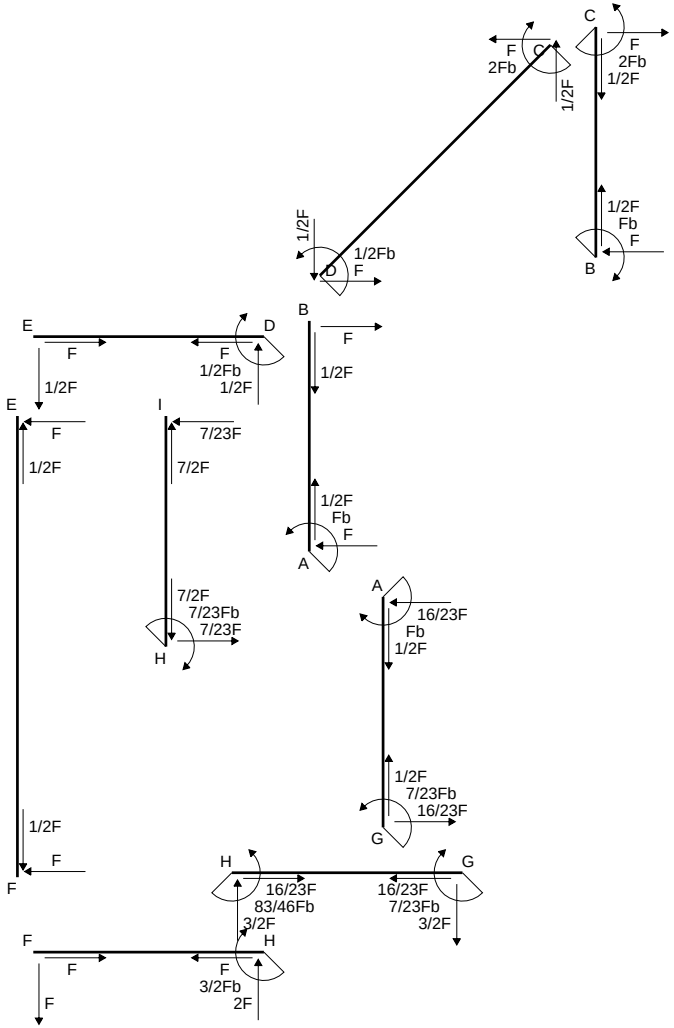
C
F
2Fb
C
F
2Fb
1/2F
1/2F
1/2F
Fb
F
B
1/2F
1/2Fb
F
D
E
F
D
F
1/2Fb
1/2F
1/2F
B
F
1/2F
E
F
1/2F
I
7/23F
7/2F
1/2F
Fb
F
A
7/2F
7/23Fb
7/23F
H
A
16/23F
Fb
1/2F
1/2F
7/23Fb
16/23F
G
1/2F
F
F
H
G
16/23F
83/46Fb
3/2F
16/23F
7/23Fb
3/2F
F
H
F
F
3/2Fb
2F
F

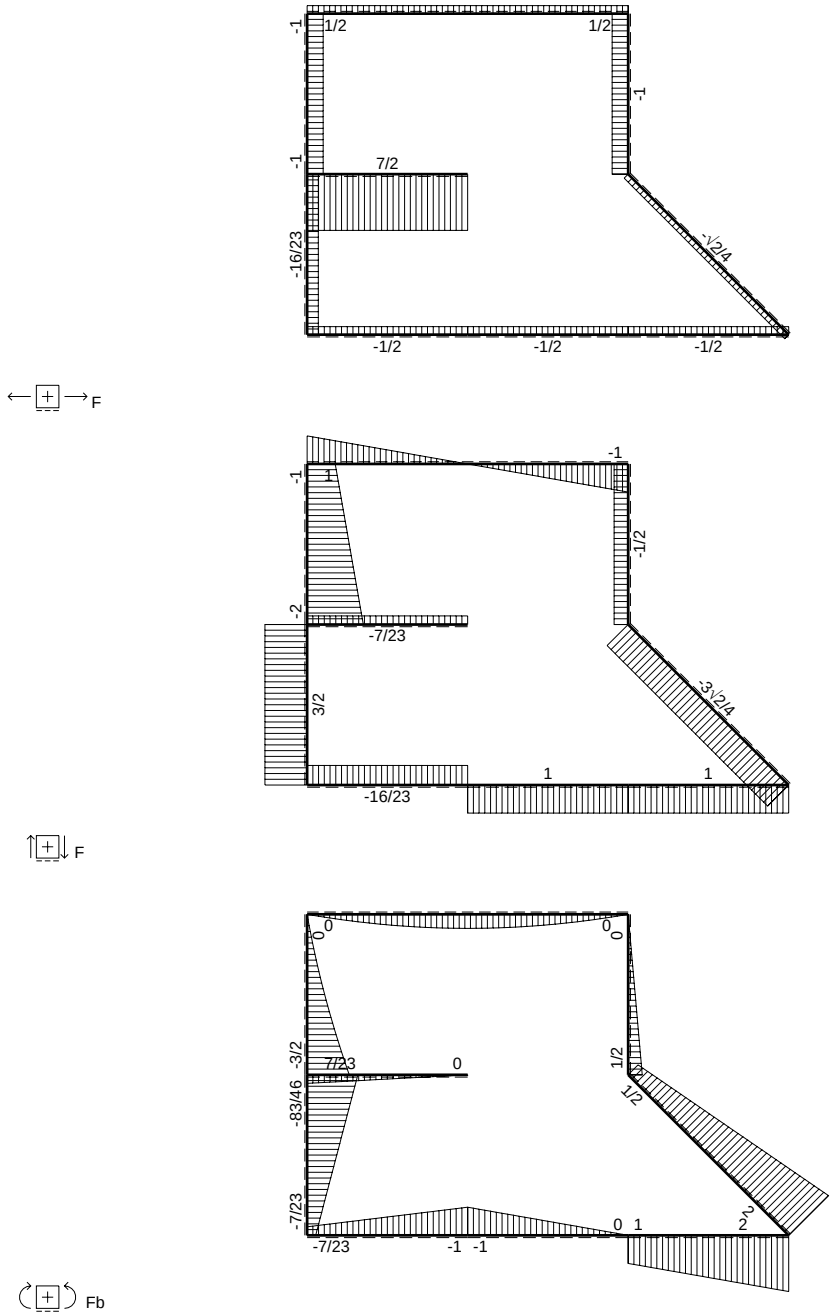
-1
1/2
1/2
-1
-1
7/2
-16/23
-1/2
-1/2
-1/2
-1/2
F
-1
-1
-1/2
-2
-7/23
3/2
-3/2
1
1
-16/23
F
0
0
0
-3/2
7/23
0
1/2
1/2
-83/46
-7/23
0
1
2
-7/23
-1
-1
Fb

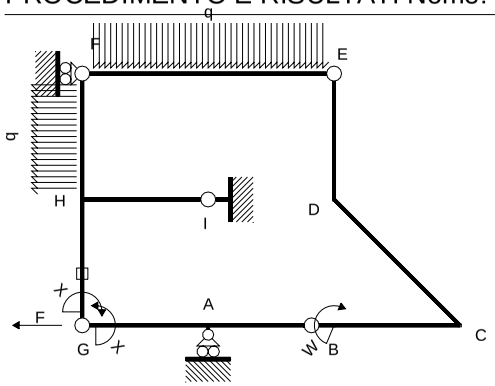

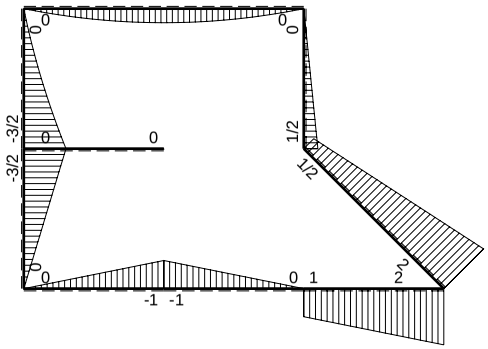

M_0 flessione da carichi assegnati

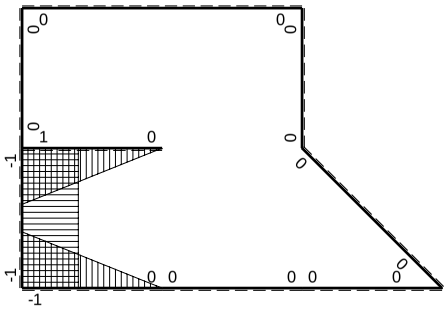

M_x flessione da iperstatica X=1

Quadro contributi PLV per iperstatica $X=W_{GA}$

→	$M_x(x)$	$M_0(x)$	M_xM_0	M_xM_x	$\int M_xM_0/EJdx$	$\int XM_xM_x/EJdx$
AB b	0	-Fb+Fx	0	0	0	0
BA b	0	Fx	0	0		
BC b	0	Fb+Fx	0	0	0	0
CB b	0	-2Fb+Fx	0	0		
CD √2b	0	2Fb-3√2/4Fx	0	0	0	0
DE b	0	1/2Fb-1/2Fx	0	0	0	0
ED b	0	-1/2Fx	0	0		
EF 2b	0	$-Fx+1/2qx^2$	0	0	0	0
FE 2b	0	$Fx-1/2qx^2$	0	0		
GA b	-1+x/b	-Fx	$Fx-Fx^2/b$	$1-2x/b+x^2/b^2$	$1/6Fb^2/EJ$	1/3Xb/EJ
AG b	x/b	Fb-Fx	$Fx-Fx^2/b$	x^2/b^2		
FH b	0	$-Fx-1/2qx^2$	0	0	0	0
HF b	0	$3/2Fb-2Fx+1/2qx^2$	0	0		
HI b	1-x/b	0	0	$1-2x/b+x^2/b^2$	0	1/3Xb/EJ
IH b	-x/b	0	0	x^2/b^2		
HG b	-1	-3/2Fb+3/2Fx	3/2Fb-3/2Fx	1	$3/4Fb^2/EJ$	Xb/EJ
GH b	1	3/2Fx	3/2Fx	1		
HG	elongazione asta $N_{1HG}\varepsilon_{HG}L_{HG}$				$-Fb^2/EJ$	
A	molla nodo $-V_{1A}(V_{0A}+XV_{1A})/k_A$				$-1/2Fb^2/EJ$	1/4Xb/EJ
	totali				$-7/12Fb^2/EJ$	23/12Xb/EJ
	iperstatica $X=W_{GA}$				7/23Fb	

Sviluppi di calcolo iperstatica

$L^{XX}_{GA} = \int_o^b (1 - 2\,x/b + x^2/b^2)\ 1/EJ\ dx = [\,x - x^2/b + 1/3\,x^3/b^2\,]_o^b\ 1/EJ$

$= (\,b - b + 1/3\,b\,)\ 1/EJ = 1/3\ b/EJ$

$L^{XX}_{AG} = \int_o^b (\,x^2/b^2\,)\ 1/EJ\ dx = [1/3\,x^3/b^2\,]_o^b\ 1/EJ$

$= (1/3\,b)\ 1/EJ = 1/3\ b/EJ$

$L^{XX}_{HI} = \int_o^b (1 - 2\,x/b + x^2/b^2)\ 1/EJ\ dx = [\,x - x^2/b + 1/3\,x^3/b^2\,]_o^b\ 1/EJ$

$= (\,b - b + 1/3\,b\,)\ 1/EJ = 1/3\ b/EJ$

$L^{XX}_{IH} = \int_o^b (\,x^2/b^2\,)\ 1/EJ\ dx = [1/3\,x^3/b^2\,]_o^b\ 1/EJ$

$= (1/3\,b)\ 1/EJ = 1/3\ b/EJ$

$L^{XX}_{HG} = \int_o^b (1)\ 1/EJ\ dx = [\,x\,]_o^b\ 1/EJ$

$= (\,b\,)\ 1/EJ = b/EJ$

$L^{XX}_{GH} = \int_o^b (1)\ 1/EJ\ dx = [\,x\,]_o^b\ 1/EJ$

$= (\,b\,)\ 1/EJ = b/EJ$

$L^{Xo}_{GA} = \int_o^b (\,x/b - x^2/b^2\,)\ Fb\ 1/EJ\ dx = [1/2\,x^2/b - 1/3\,x^3/b^2\,]_o^b\ Fb\ 1/EJ$

$= (1/2\,b - 1/3\,b\,)\ Fb\ 1/EJ = 1/6\ Fb^2/EJ$

$L^{Xo}_{AG} = \int_o^b (\,x/b - x^2/b^2\,)\ Fb\ 1/EJ\ dx = [1/2\,x^2/b - 1/3\,x^3/b^2\,]_o^b\ Fb\ 1/EJ$

$= (1/2\,b - 1/3\,b\,)\ Fb\ 1/EJ = 1/6\ Fb^2/EJ$

$L^{Xo}_{HG} = \int_o^b (3/2 - 3/2\,x/b\,)\ Fb\ 1/EJ\ dx - 1\ \ (-1)\ \ (-1)\ \ Fb^2/EJ$

$= [3/2\,x - 3/4\,x^2/b\,]_o^b\ Fb\ 1/EJ\ -\ 1\ \ (-1)\ \ (-1)\ \ Fb^2/EJ$

$= (3/2\,b - 3/4\,b\,)\ Fb\ 1/EJ\ -\ 1\ \ (-1)\ \ (-1)\ \ Fb^2/EJ = -1/4\ \ Fb^2/EJ$

$L^{Xo}_{GH} = \int_o^b (3/2\,x/b\,)\ Fb\ 1/EJ\ dx - 1\ \ (-1)\ \ (-1)\ \ Fb^2/EJ = [3/4\,x^2/b\,]_o^b\ Fb\ 1/EJ\ -\ 1\ \ (-1)\ \ (-1)\ \ Fb^2/EJ$

$= (3/4\,b\,)\ Fb\ 1/EJ\ -\ 1\ \ (-1)\ \ (-1)\ \ Fb^2/EJ = -1/4\ \ Fb^2/EJ$

PROCEDIMENTO E RISULTATI Nome: ESΣ05.xxxx.201

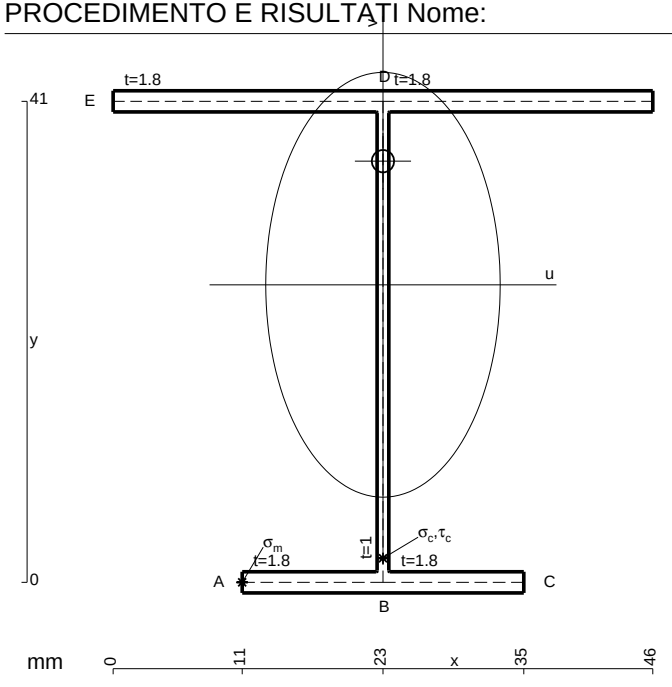

A = 167. mm^2
J_u = 54749. mm^4
J_v = 16674. mm^4
J_t = 149.7 mm^4
y_o = 10.54 mm
y_g = 25.36 mm
N = -770. N
T_y = -1540. N
M_x = -438900. Nmm
x_m = 11. mm
u_m = -12. mm
v_m = -25.36 mm
$\sigma_m = N/A - Mv/J_u$ = -207.9 N/mm^2
x_c = 23. mm
v_c = -25.36 mm
$\sigma_c = N/A - Mv/J_u$ = -207.9 N/mm^2
$\tau_c = TS^*/tJ_u$ = 30.82 N/mm^2
$\tau_g = TS^*/tJ_u$ = 30.82 N/mm^2
t_c = 770. mm
$\sigma_o = \sqrt{\sigma^2 + 3\tau^2}$ = 214.7 N/mm^2

@ Adolfo Zavelani Rossi, Politecnico di Milano, vers.27.03.13 01.12.25

ESΣ05.xxxx.201

@ Adolfo Zavelani Rossi, Politecnico di Milano, vers.27.03.13 01.12.25

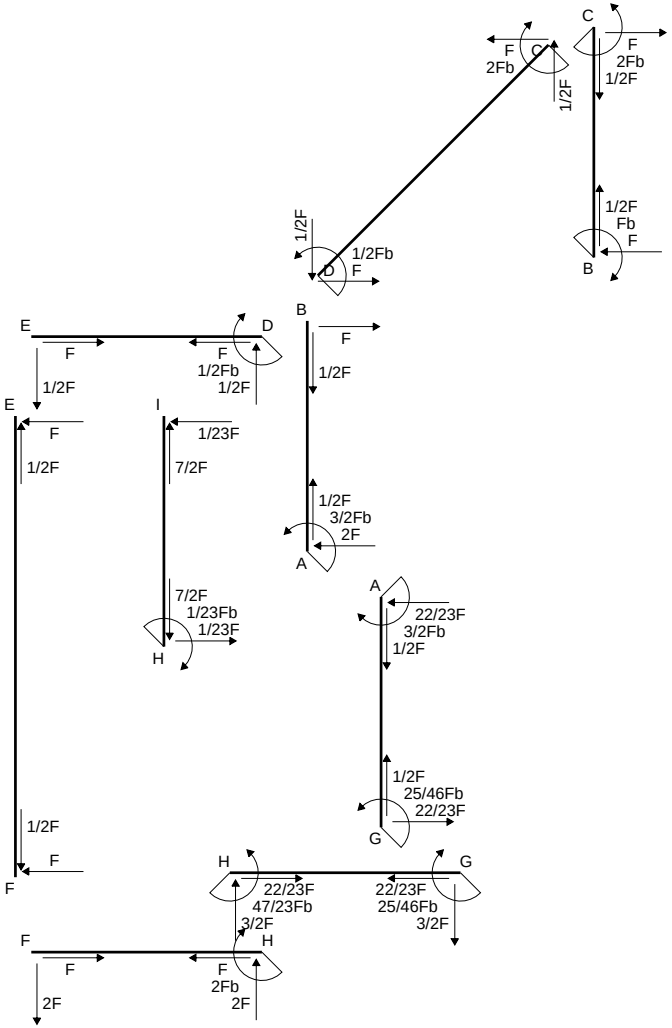
C
F
2Fb
C
F
2Fb
1/2F
1/2F
1/2F
Fb
F
B
1/2F
1/2Fb
D
F
E
D
F
F
1/2Fb
1/2F
1/2F
B
F
1/2F
E
F
1/2F
I
1/23F
7/2F
1/2F
3/2Fb
2F
A
7/2F
1/23Fb
1/23F
H
A
22/23F
3/2Fb
1/2F
1/2F
25/46Fb
22/23F
G
1/2F
F
F
H
22/23F
47/23Fb
3/2F
H
G
22/23F
25/46Fb
3/2F
F
F
F
2Fb
2F
2F

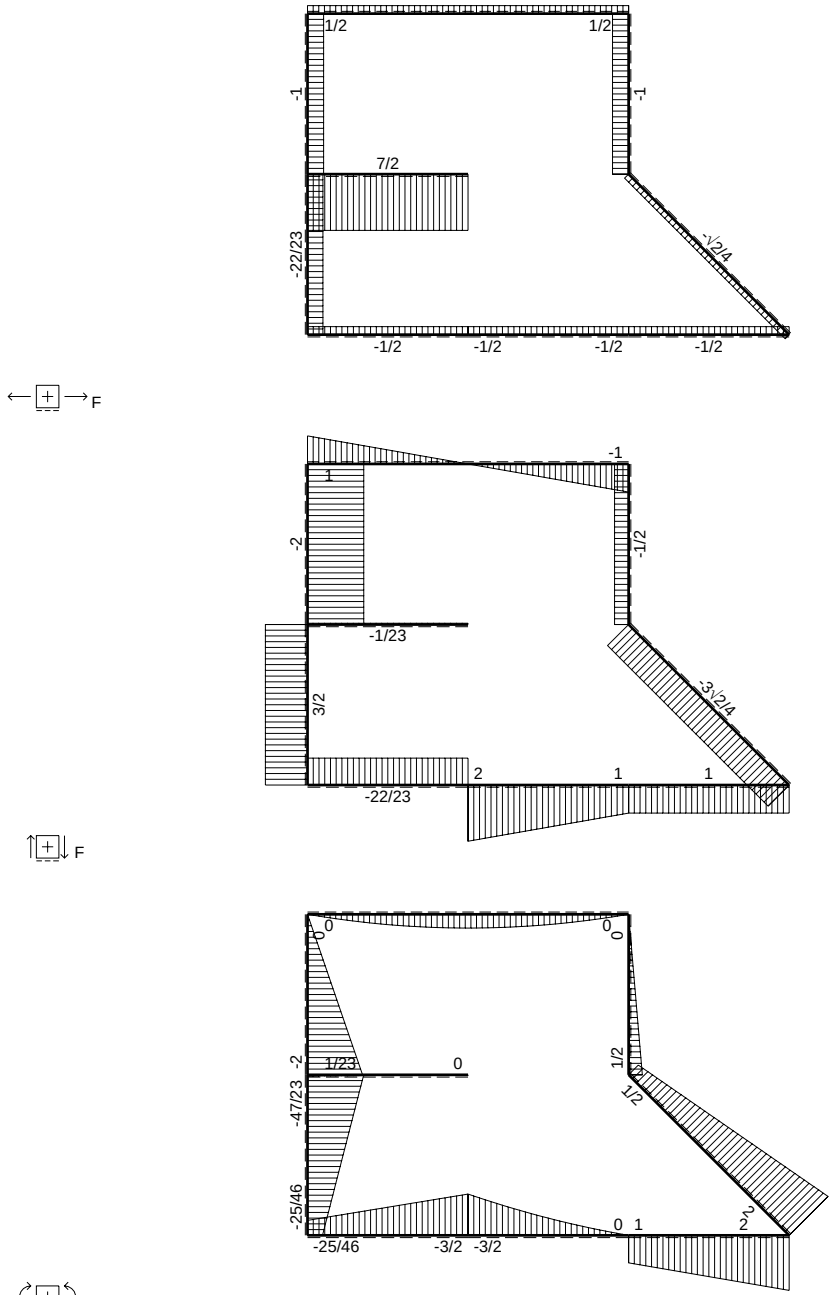
F
1/2
1/2
-1
-1
7/2
-22/23
-1/2
-1/2
-1/2
-1/2
-1/2
F
-1
1
-2
-1/2
-1/23
3/2
-3/2
2
1
1
-22/23
F
0
0
0
0
-2
1/23
0
1/2
1/2
-47/23
-25/46
0
1
2
-25/46
-3/2
-3/2
Fb

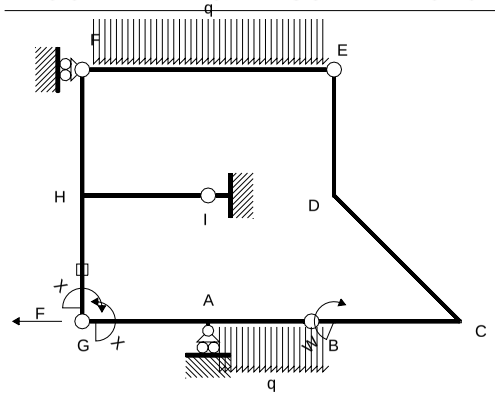

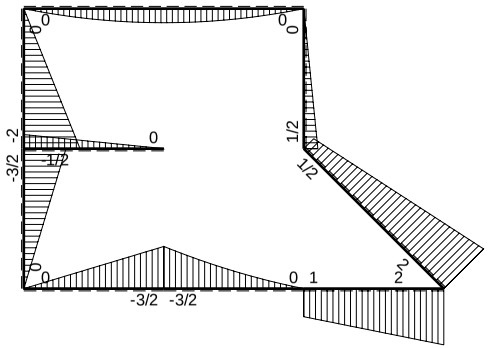

M_0 flessione da carichi assegnati

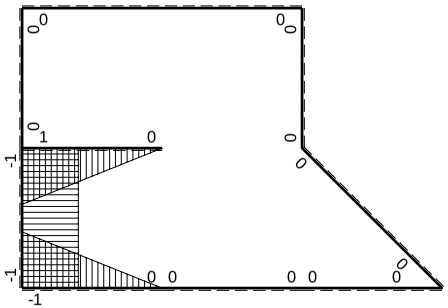

M_x flessione da iperstatica X=1

Quadro contributi PLV per iperstatica $X=W_{GA}$

→	$M_x(x)$	$M_0(x)$	M_xM_0	M_xM_x	$\int M_xM_0/EJdx$	$\int XM_xM_x/EJdx$
AB b	0	$-3/2Fb+2Fx-1/2qx^2$	0	0	0	0
BA b	0	$Fx+1/2qx^2$	0	0		
BC b	0	Fb+Fx	0	0	0	0
CB b	0	-2Fb+Fx	0	0		
CD √2b	0	$2Fb-3\sqrt{2}/4Fx$	0	0	0	0
DE b	0	1/2Fb-1/2Fx	0	0	0	0
ED b	0	-1/2Fx	0	0		
EF 2b	0	$-Fx+1/2qx^2$	0	0	0	0
FE 2b	0	$Fx-1/2qx^2$	0	0		
GA b	-1+x/b	-3/2Fx	$3/2Fx-3/2Fx^2/b$	$1-2x/b+x^2/b^2$	$1/4Fb^2/EJ$	1/3Xb/EJ
AG b	x/b	3/2Fb-3/2Fx	$3/2Fx-3/2Fx^2/b$	x^2/b^2		
FH b	0	-2Fx	0	0	0	0
HF b	0	2Fb-2Fx	0	0		
HI b	1-x/b	-1/2Fb+1/2Fx	$-1/2Fb+Fx-1/2Fx^2/b$	$1-2x/b+x^2/b^2$	$-1/6Fb^2/EJ$	1/3Xb/EJ
IH b	-x/b	1/2Fx	$-1/2Fx^2/b$	x^2/b^2		
HG b	-1	-3/2Fb+3/2Fx	3/2Fb-3/2Fx	1	$3/4Fb^2/EJ$	Xb/EJ
GH b	1	3/2Fx	3/2Fx	1		
HG	elongazione asta $N_{1HG}\varepsilon_{HG}L_{HG}$				$-Fb^2/EJ$	
A	molla nodo $-V_{1A}(V_{0A}+XV_{1A})/k_A$				$-7/8Fb^2/EJ$	1/4Xb/EJ
	totali				$-25/24Fb^2/EJ$	23/12Xb/EJ
	iperstatica $X=W_{GA}$				25/46Fb	

Sviluppi di calcolo iperstatica

$L^{XX}_{GA} = \int_o^b (1 - 2\,x/b + x^2/b^2)\ 1/EJ\ dx = [\,x - x^2/b + 1/3\,x^3/b^2\,]_o^b\ 1/EJ$

$= (\,b - b + 1/3\,b\,)\ 1/EJ\ = 1/3\ b/EJ$

$L^{XX}_{AG} = \int_o^b (\,x^2/b^2\,)\ 1/EJ\ dx = [1/3\,x^3/b^2\,]_o^b\ 1/EJ$

$= (1/3\,b\,)\ 1/EJ\ = 1/3\ b/EJ$

$L^{XX}_{HI} = \int_o^b (1 - 2\,x/b + x^2/b^2)\ 1/EJ\ dx = [\,x - x^2/b + 1/3\,x^3/b^2\,]_o^b\ 1/EJ$

$= (\,b - b + 1/3\,b\,)\ 1/EJ\ = 1/3\ b/EJ$

$L^{XX}_{IH} = \int_o^b (\,x^2/b^2\,)\ 1/EJ\ dx = [1/3\,x^3/b^2\,]_o^b\ 1/EJ$

$= (1/3\,b\,)\ 1/EJ\ = 1/3\ b/EJ$

$L^{XX}_{HG} = \int_o^b (1)\ 1/EJ\ dx = [\,x\,]_o^b\ 1/EJ$

$= (\,b\,)\ 1/EJ\ = b/EJ$

$L^{XX}_{GH} = \int_o^b (1)\ 1/EJ\ dx = [\,x\,]_o^b\ 1/EJ$

$= (\,b\,)\ 1/EJ\ = b/EJ$

$L^{Xo}_{GA} = \int_o^b (3/2\,x/b - 3/2\,x^2/b^2)\ Fb\ 1/EJ\ dx = [3/4\,x^2/b - 1/2\,x^3/b^2\,]_o^b\ Fb\ 1/EJ$

$= (3/4\,b - 1/2\,b\,)\ Fb\ 1/EJ\ = 1/4\ Fb^2/EJ$

$L^{Xo}_{AG} = \int_o^b (3/2\,x/b - 3/2\,x^2/b^2)\ Fb\ 1/EJ\ dx = [3/4\,x^2/b - 1/2\,x^3/b^2\,]_o^b\ Fb\ 1/EJ$

$= (3/4\,b - 1/2\,b\,)\ Fb\ 1/EJ\ = 1/4\ Fb^2/EJ$

$L^{Xo}_{HI} = \int_o^b (-1/2 + x/b - 1/2\,x^2/b^2)\ Fb\ 1/EJ\ dx = [-1/2\,x + 1/2\,x^2/b - 1/6\,x^3/b^2\,]_o^b\ Fb\ 1/EJ$

$= (-1/2\,b + 1/2\,b - 1/6\,b\,)\ Fb\ 1/EJ\ = -1/6\ Fb^2/EJ$

$L^{Xo}_{IH} = \int_o^b (-1/2\,x^2/b^2)\ Fb\ 1/EJ\ dx = [-1/6\,x^3/b^2\,]_o^b\ Fb\ 1/EJ$

$= (-1/6\,b\,)\ Fb\ 1/EJ\ = -1/6\ Fb^2/EJ$

$L^{Xo}_{HG} = \int_o^b (3/2 - 3/2\,x/b\,)\ Fb\ 1/EJ\ dx - 1\ \ (-1)\ \ (-1)\ \ Fb^2/EJ$

$= [3/2\,x - 3/4\,x^2/b\,]_o^b\ Fb\ 1/EJ\ - 1\ \ (-1)\ \ (-1)\ \ Fb^2/EJ$

$= (3/2\,b - 3/4\,b\,)\ Fb\ 1/EJ\ - 1\ \ (-1)\ \ (-1)\ \ Fb^2/EJ = -1/4\ \ Fb^2/EJ$

$L^{Xo}_{GH} = \int_o^b (3/2\,x/b\,)\ Fb\ 1/EJ\ dx - 1\ \ (-1)\ \ (-1)\ \ Fb^2/EJ = [3/4\,x^2/b\,]_o^b\ Fb\ 1/EJ\ - 1\ \ (-1)\ \ (-1)\ \ Fb^2/EJ$

$= (3/4\,b\,)\ Fb\ 1/EJ\ - 1\ \ (-1)\ \ (-1)\ \ Fb^2/EJ = -1/4\ \ Fb^2/EJ$

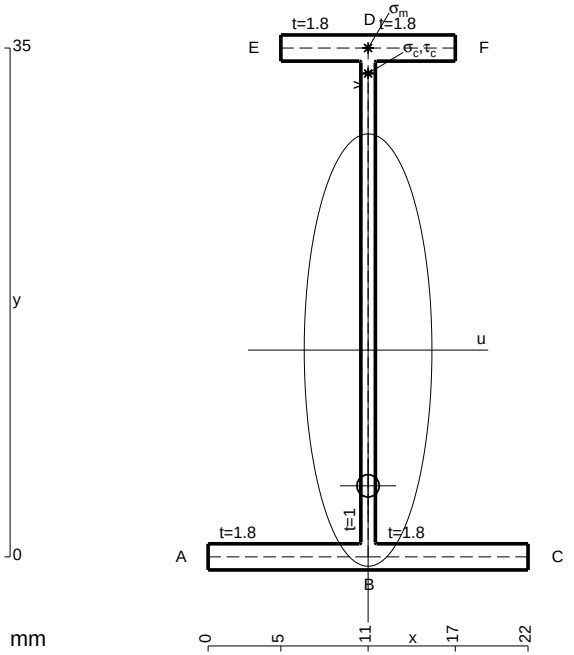

A = 96.2 mm^2
J_u = 21284. mm^4
J_v = 1856. mm^4
J_t = 77.76 mm^4
y_o = -9.339 mm
y_g = 14.23 mm
N = -310. N
T_y = -620. N
M_x = -223200. Nmm
x_m = 11. mm
y_m = 35. mm
v_m = 20.77 mm
$\sigma_m = N/A - Mv/J_u$ = 214.6 N/mm^2
y_c = 2. mm
u_c = -11. mm
v_c = -12.23 mm
$\sigma_c = N/A - Mv/J_u$ = 214.6 N/mm^2
$\tau_c = TS^*/tJ_u$ = 13.07 N/mm^2
$\tau_g = TS^*/tJ_u$ = 13.07 N/mm^2
t_c = 310. mm
$\sigma_o = \sqrt{\sigma^2 + 3\tau^2}$ = 215.8 N/mm^2

ESΣ05.xxxx.202

@ Adolfo Zavelani Rossi, Politecnico di Milano, vers.27.03.13 01.12.25

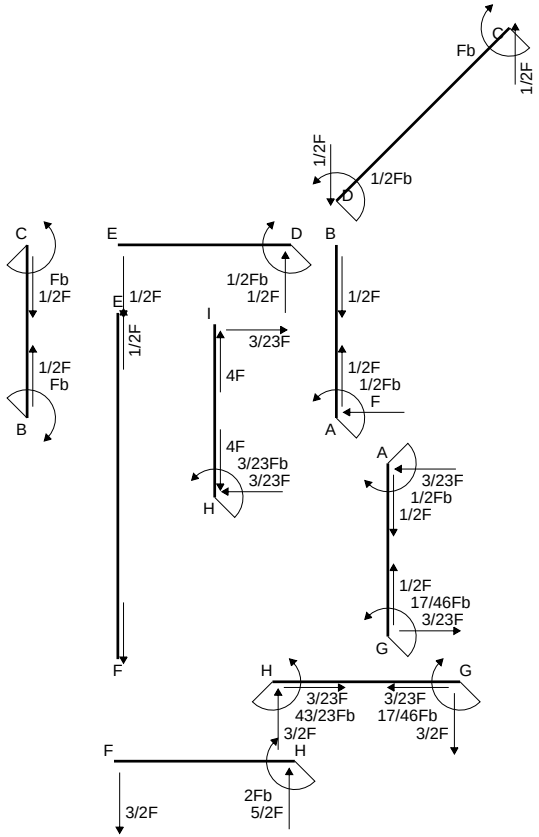
C
Fb
1/2F
1/2F
Fb
B
E
D
1/2Fb
1/2F
E 1/2F
1/2F
I
3/23F
4F
4F
3/23Fb
3/23F
H
B
1/2F
1/2F
1/2Fb
F
A
A
3/23F
1/2Fb
1/2F
1/2F
17/46Fb
3/23F
G
F
H
G
3/23F
43/23Fb
3/2F
3/23F
17/46Fb
3/2F
F
H
2Fb
5/2F
3/2F
Fb
C
1/2F
1/2F
1/2Fb
D

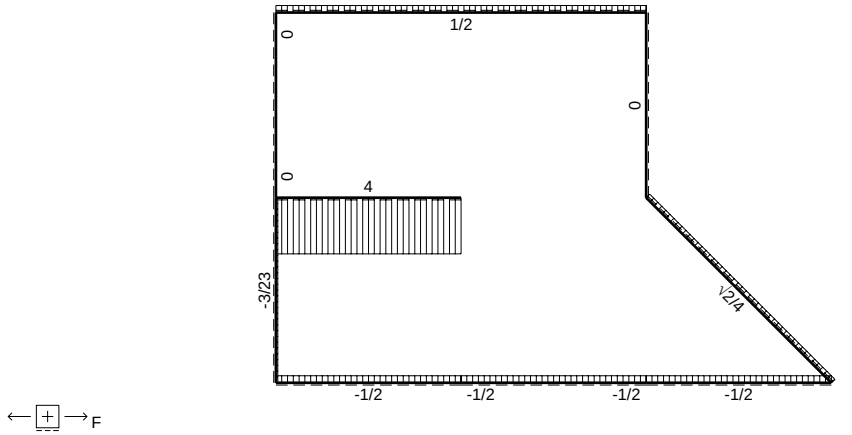
1/2
0
0
0
4
-3/23
√2/4
-1/2
-1/2
-1/2
-1/2
F

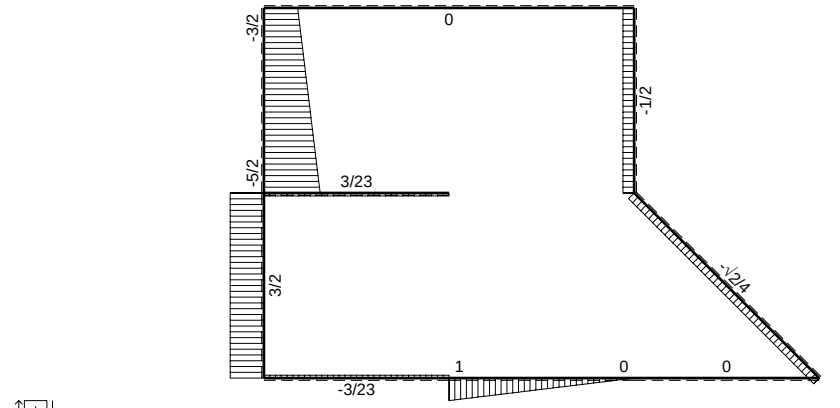
-3/2
0
-1/2
-5/2
3/23
-√2/4
3/2
-3/23
1
0
0
F

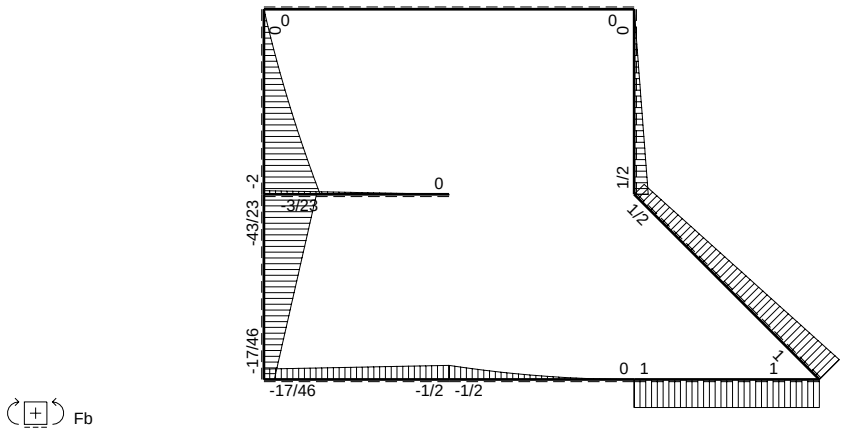
0
0
0
-2
0
1/2
-43/23
-3/23
1/2
-17/46
0 1
1
-17/46
-1/2 -1/2
Fb

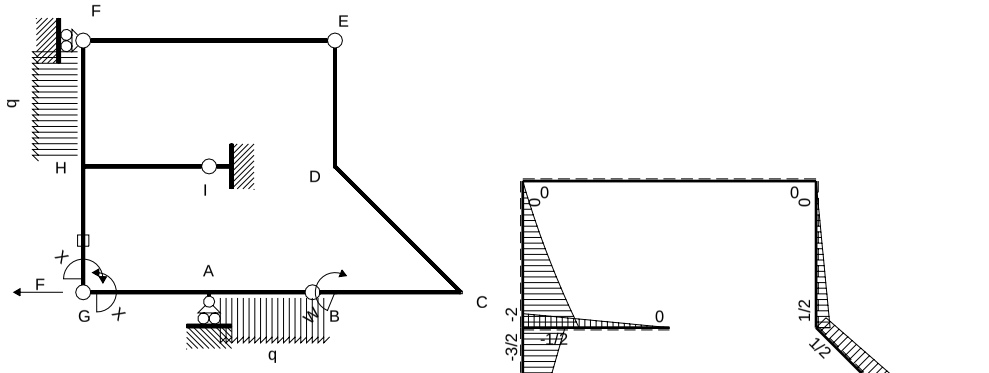

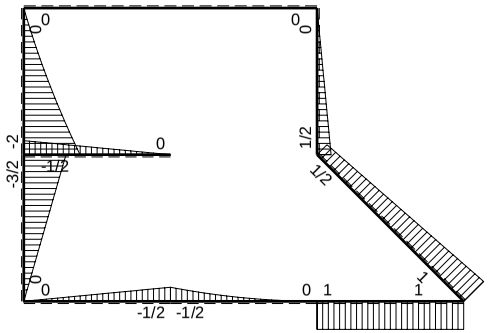

M_0 flessione da carichi assegnati

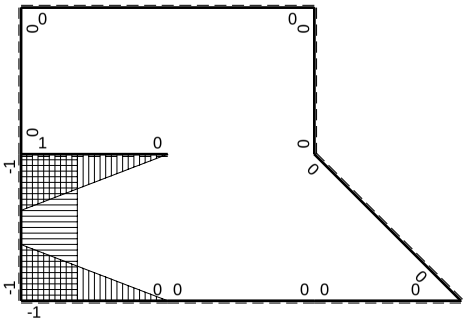

M_x flessione da iperstatica X=1

Quadro contributi PLV per iperstatica $X=W_{GA}$

→	$M_x(x)$	$M_0(x)$	M_xM_0	M_xM_x	$\int M_xM_0/EJdx$	$\int XM_xM_x/EJdx$
AB b	0	$-1/2Fb+Fx-1/2qx^2$	0	0	0	0
BA b	0	$1/2qx^2$	0	0		
BC b	0	Fb	0	0	0	0
CB b	0	-Fb	0	0		
CD $\sqrt{2}$b	0	$Fb-\sqrt{2}/4Fx$	0	0	0	0
DE b	0	1/2Fb-1/2Fx	0	0	0	0
ED b	0	-1/2Fx	0	0		
EF 2b	0	0	0	0	0	0
FE 2b	0	0	0	0		
GA b	-1+x/b	-1/2Fx	$1/2Fx-1/2Fx^2/b$	$1-2x/b+x^2/b^2$	$1/12Fb^2/EJ$	1/3Xb/EJ
AG b	x/b	1/2Fb-1/2Fx	$1/2Fx-1/2Fx^2/b$	x^2/b^2		
FH b	0	$-3/2Fx-1/2qx^2$	0	0	0	0
HF b	0	$2Fb-5/2Fx+1/2qx^2$	0	0		
HI b	1-x/b	-1/2Fb+1/2Fx	$-1/2Fb+Fx-1/2Fx^2/b$	$1-2x/b+x^2/b^2$	$-1/6Fb^2/EJ$	1/3Xb/EJ
IH b	-x/b	1/2Fx	$-1/2Fx^2/b$	x^2/b^2		
HG b	-1	-3/2Fb+3/2Fx	3/2Fb-3/2Fx	1	$3/4Fb^2/EJ$	Xb/EJ
GH b	1	3/2Fx	3/2Fx	1		
HG	elongazione asta $N_{1HG}\varepsilon_{HG}L_{HG}$				$-Fb^2/EJ$	
A	molla nodo $-V_{1A}(V_{0A}+XV_{1A})/k_A$				$-3/8Fb^2/EJ$	1/4Xb/EJ
	totali				$-17/24Fb^2/EJ$	23/12Xb/EJ
	iperstatica $X=W_{GA}$				17/46Fb	

Sviluppi di calcolo iperstatica

$L^{XX}_{GA} = \int_o^b (1 - 2\,x/b + x^2/b^2)\ 1/EJ\ dx = [\,x - x^2/b + 1/3\,x^3/b^2\,]_o^b\ 1/EJ$

$= (\,b - b + 1/3\,b\,)\ 1/EJ = 1/3\ b/EJ$

$L^{XX}_{AG} = \int_o^b (\,x^2/b^2\,)\ 1/EJ\ dx = [1/3\,x^3/b^2\,]_o^b\ 1/EJ$

$= (1/3\,b\,)\ 1/EJ = 1/3\ b/EJ$

$L^{XX}_{HI} = \int_o^b (1 - 2\,x/b + x^2/b^2)\ 1/EJ\ dx = [\,x - x^2/b + 1/3\,x^3/b^2\,]_o^b\ 1/EJ$

$= (\,b - b + 1/3\,b\,)\ 1/EJ = 1/3\ b/EJ$

$L^{XX}_{IH} = \int_o^b (\,x^2/b^2\,)\ 1/EJ\ dx = [1/3\,x^3/b^2\,]_o^b\ 1/EJ$

$= (1/3\,b\,)\ 1/EJ = 1/3\ b/EJ$

$L^{XX}_{HG} = \int_o^b (1)\ 1/EJ\ dx = [\,x\,]_o^b\ 1/EJ$

$= (\,b\,)\ 1/EJ = b/EJ$

$L^{XX}_{GH} = \int_o^b (1)\ 1/EJ\ dx = [\,x\,]_o^b\ 1/EJ$

$= (\,b\,)\ 1/EJ = b/EJ$

$L^{Xo}_{GA} = \int_o^b (1/2\,x/b - 1/2\,x^2/b^2)\ Fb\ 1/EJ\ dx = [1/4\,x^2/b - 1/6\,x^3/b^2\,]_o^b\ Fb\ 1/EJ$

$= (1/4\,b - 1/6\,b\,)\ Fb\ 1/EJ = 1/12\ Fb^2/EJ$

$L^{Xo}_{AG} = \int_o^b (1/2\,x/b - 1/2\,x^2/b^2\,)\ Fb\ 1/EJ\ dx = [1/4\,x^2/b - 1/6\,x^3/b^2\,]_o^b\ Fb\ 1/EJ$

$= (1/4\,b - 1/6\,b\,)\ Fb\ 1/EJ = 1/12\ Fb^2/EJ$

$L^{Xo}_{HI} = \int_o^b (-1/2 + x/b - 1/2\,x^2/b^2\,)\ Fb\ 1/EJ\ dx = [-1/2\,x + 1/2\,x^2/b - 1/6\,x^3/b^2\,]_o^b\ Fb\ 1/EJ$

$= (-1/2\,b + 1/2\,b - 1/6\,b\,)\ Fb\ 1/EJ = -1/6\ Fb^2/EJ$

$L^{Xo}_{IH} = \int_o^b (-1/2\,x^2/b^2\,)\ Fb\ 1/EJ\ dx = [-1/6\,x^3/b^2\,]_o^b\ Fb\ 1/EJ$

$= (-1/6\,b\,)\ Fb\ 1/EJ = -1/6\ Fb^2/EJ$

$L^{Xo}_{HG} = \int_o^b (3/2 - 3/2\,x/b\,)\ Fb\ 1/EJ\ dx - 1\ \ (-1)\ \ (-1)\ \ Fb^2/EJ$

$= [3/2\,x - 3/4\,x^2/b\,]_o^b\ Fb\ 1/EJ\ - 1\ \ (-1)\ \ (-1)\ \ Fb^2/EJ$

$= (3/2\,b - 3/4\,b\,)\ Fb\ 1/EJ\ - 1\ \ (-1)\ \ (-1)\ \ Fb^2/EJ = -1/4\ \ Fb^2/EJ$

$L^{Xo}_{GH} = \int_o^b (3/2\,x/b\,)\ Fb\ 1/EJ\ dx - 1\ \ (-1)\ \ (-1)\ \ Fb^2/EJ = [3/4\,x^2/b\,]_o^b\ Fb\ 1/EJ\ - 1\ \ (-1)\ \ (-1)\ \ Fb^2/EJ$

$= (3/4\,b\,)\ Fb\ 1/EJ\ - 1\ \ (-1)\ \ (-1)\ \ Fb^2/EJ = -1/4\ \ Fb^2/EJ$

PROCEDIMENTO E RISULTATI Nome: ESΣ05.xxxx.203

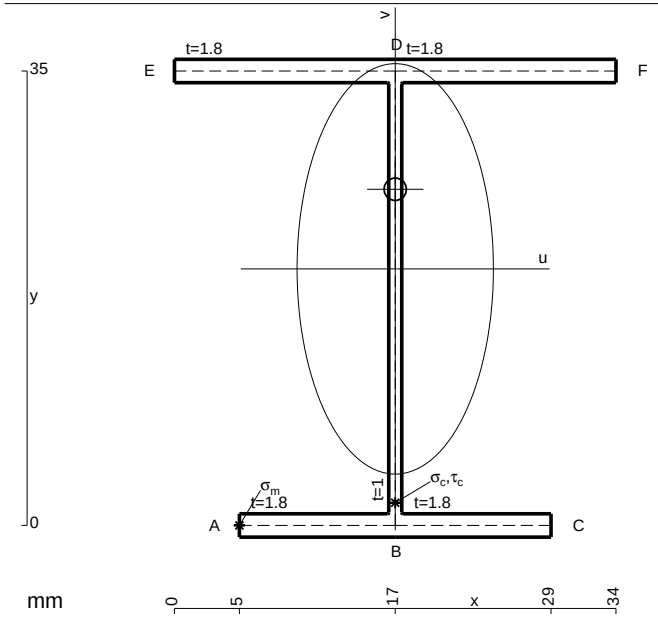

A = 139.4 mm^2
J_u = 34834. mm^4
J_v = 7969. mm^4
J_t = 124.4 mm^4
y_o = 6.133 mm
y_g = 19.76 mm
T_y = -1275. N
M_x = -397800. Nmm
x_m = 5. mm
u_m = -12. mm
v_m = -19.76 mm
$\sigma_m = -Mv/J_u$ = -225.7 N/mm^2
x_c = 17. mm
v_c = -19.76 mm
$\sigma_c = -Mv/J_u$ = -225.7 N/mm^2
$\tau_c = TS^*/tJ_u$ = 31.24 N/mm^2
$\tau_g = TS^*/tJ_u$ = 31.24 N/mm^2
t_c = 510. mm
$\sigma_o = \sqrt{\sigma^2 + 3\tau^2}$ = 232.1 N/mm^2

@ Adolfo Zavelani Rossi, Politecnico di Milano, vers.27.03.13 01.12.25

ESΣ05.xxxx.203

@ Adolfo Zavelani Rossi, Politecnico di Milano, vers.27.03.13 01.12.25

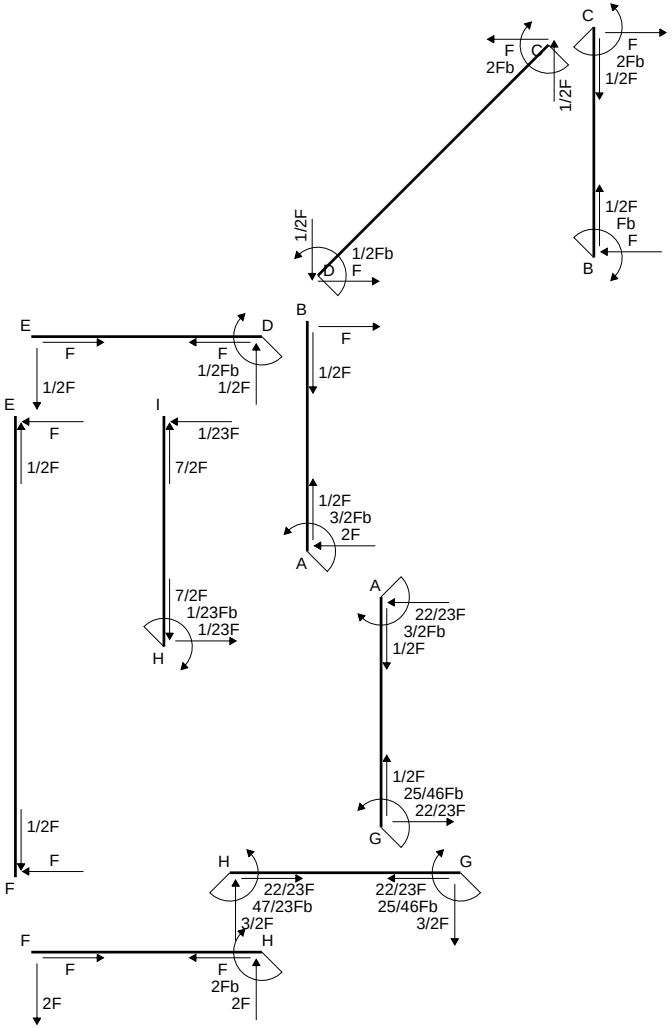
C
F
2Fb
C
F
2Fb
1/2F
1/2F
1/2F
Fb
F
B
1/2F
1/2Fb
D
F
E
D
F
F
1/2Fb
1/2F
B
F
1/2F
E
F
1/2F
I
1/23F
7/2F
1/2F
3/2Fb
2F
A
7/2F
1/23Fb
1/23F
H
A
22/23F
3/2Fb
1/2F
1/2F
25/46Fb
22/23F
G
1/2F
F
F
H
G
22/23F
47/23Fb
3/2F
22/23F
25/46Fb
3/2F
F
H
F
F
2Fb
2F
2F

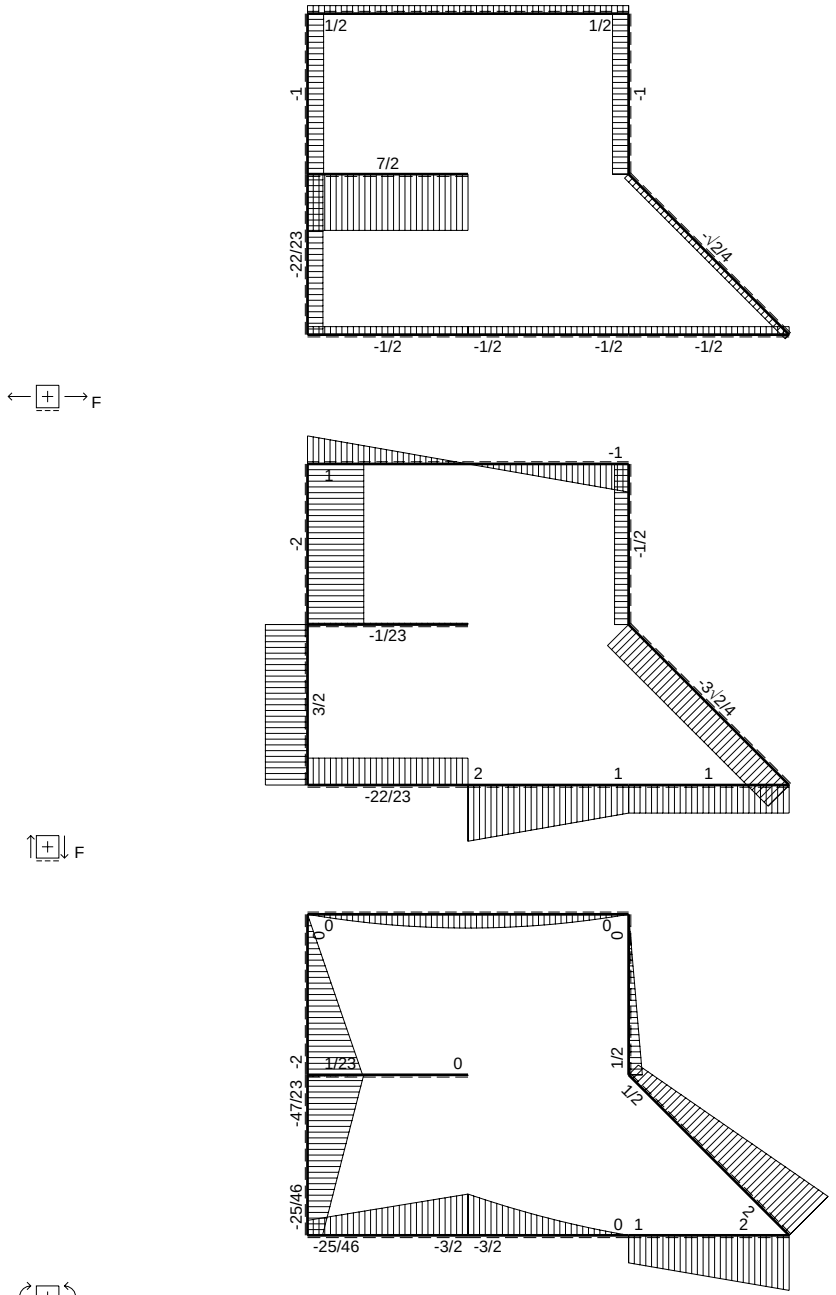
1/2
1/2
-1
-1
7/2
-22/23
-1/2
-1/2
-1/2
-1/2
-1/2
F
-1
1
-2
-1/2
-1/23
3/2
-3/2
2
1
1
-22/23
F
0
0
0
0
-2
1/23
0
1/2
1/2
-47/23
-25/46
0
1
2
-25/46
-3/2
-3/2
Fb

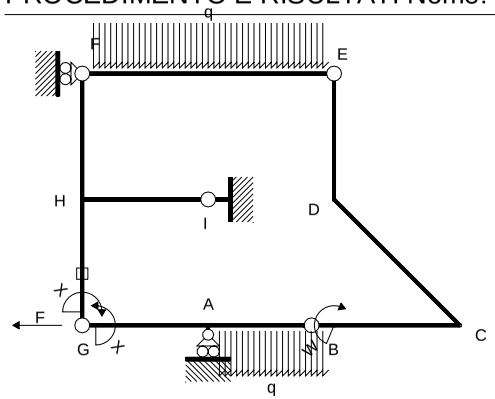

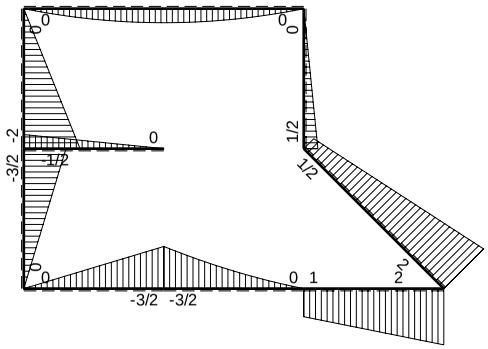

M_0 flessione da carichi assegnati

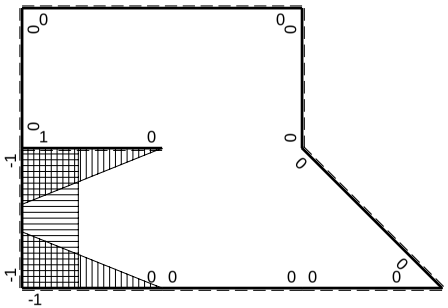

M_x flessione da iperstatica X=1

Quadro contributi PLV per iperstatica $X=W_{GA}$

→	$M_x(x)$	$M_0(x)$	M_xM_0	M_xM_x	$\int M_xM_0/EJdx$	$\int XM_xM_x/EJdx$
AB b	0	$-3/2Fb+2Fx-1/2qx^2$	0	0	0	0
BA b	0	$Fx+1/2qx^2$	0	0		
BC b	0	Fb+Fx	0	0	0	0
CB b	0	-2Fb+Fx	0	0		
CD √2b	0	2Fb-3√2/4Fx	0	0	0	0
DE b	0	1/2Fb-1/2Fx	0	0	0	0
ED b	0	-1/2Fx	0	0		
EF 2b	0	$-Fx+1/2qx^2$	0	0	0	0
FE 2b	0	$Fx-1/2qx^2$	0	0		
GA b	-1+x/b	-3/2Fx	$3/2Fx-3/2Fx^2/b$	$1-2x/b+x^2/b^2$	$1/4Fb^2/EJ$	1/3Xb/EJ
AG b	x/b	3/2Fb-3/2Fx	$3/2Fx-3/2Fx^2/b$	x^2/b^2		
FH b	0	-2Fx	0	0	0	0
HF b	0	2Fb-2Fx	0	0		
HI b	1-x/b	-1/2Fb+1/2Fx	$-1/2Fb+Fx-1/2Fx^2/b$	$1-2x/b+x^2/b^2$	$-1/6Fb^2/EJ$	1/3Xb/EJ
IH b	-x/b	1/2Fx	$-1/2Fx^2/b$	x^2/b^2		
HG b	-1	-3/2Fb+3/2Fx	3/2Fb-3/2Fx	1	$3/4Fb^2/EJ$	Xb/EJ
GH b	1	3/2Fx	3/2Fx	1		
HG	elongazione asta $N_{1HG}\varepsilon_{HG}L_{HG}$				$-Fb^2/EJ$	
A	molla nodo $-V_{1A}(V_{0A}+XV_{1A})/k_A$				$-7/8Fb^2/EJ$	1/4Xb/EJ
	totali				$-25/24Fb^2/EJ$	23/12Xb/EJ
	iperstatica $X=W_{GA}$				25/46Fb	

Sviluppi di calcolo iperstatica

$L^{XX}_{GA} = \int_o^b (1 - 2\,x/b + x^2/b^2)\ 1/EJ\ dx = [\,x - x^2/b + 1/3\,x^3/b^2\,]_o^b\ 1/EJ$

$= (\,b - b + 1/3\,b\,)\ 1/EJ = 1/3\ b/EJ$

$L^{XX}_{AG} = \int_o^b (\,x^2/b^2\,)\ 1/EJ\ dx = [1/3\,x^3/b^2\,]_o^b\ 1/EJ$

$= (1/3\,b\,)\ 1/EJ = 1/3\ b/EJ$

$L^{XX}_{HI} = \int_o^b (1 - 2\,x/b + x^2/b^2)\ 1/EJ\ dx = [\,x - x^2/b + 1/3\,x^3/b^2\,]_o^b\ 1/EJ$

$= (\,b - b + 1/3\,b\,)\ 1/EJ = 1/3\ b/EJ$

$L^{XX}_{IH} = \int_o^b (\,x^2/b^2\,)\ 1/EJ\ dx = [1/3\,x^3/b^2\,]_o^b\ 1/EJ$

$= (1/3\,b\,)\ 1/EJ = 1/3\ b/EJ$

$L^{XX}_{HG} = \int_o^b (1)\ 1/EJ\ dx = [\,x\,]_o^b\ 1/EJ$

$= (\,b\,)\ 1/EJ = b/EJ$

$L^{XX}_{GH} = \int_o^b (1)\ 1/EJ\ dx = [\,x\,]_o^b\ 1/EJ$

$= (\,b\,)\ 1/EJ = b/EJ$

$L^{Xo}_{GA} = \int_o^b (3/2\,x/b - 3/2\,x^2/b^2)\ Fb\ 1/EJ\ dx = [3/4\,x^2/b - 1/2\,x^3/b^2\,]_o^b\ Fb\ 1/EJ$

$= (3/4\,b - 1/2\,b\,)\ Fb\ 1/EJ = 1/4\ Fb^2/EJ$

$L^{Xo}_{AG} = \int_o^b (3/2\,x/b - 3/2\,x^2/b^2\,)\ Fb\ 1/EJ\ dx = [3/4\,x^2/b - 1/2\,x^3/b^2\,]_o^b\ Fb\ 1/EJ$

$= (3/4\,b - 1/2\,b\,)\ Fb\ 1/EJ = 1/4\ Fb^2/EJ$

$L^{Xo}_{HI} = \int_o^b (-1/2 + x/b - 1/2\,x^2/b^2\,)\ Fb\ 1/EJ\ dx = [-1/2\,x + 1/2\,x^2/b - 1/6\,x^3/b^2\,]_o^b\ Fb\ 1/EJ$

$= (-1/2\,b + 1/2\,b - 1/6\,b\,)\ Fb\ 1/EJ = -1/6\ Fb^2/EJ$

$L^{Xo}_{IH} = \int_o^b (-1/2\,x^2/b^2\,)\ Fb\ 1/EJ\ dx = [-1/6\,x^3/b^2\,]_o^b\ Fb\ 1/EJ$

$= (-1/6\,b\,)\ Fb\ 1/EJ = -1/6\ Fb^2/EJ$

$L^{Xo}_{HG} = \int_o^b (3/2 - 3/2\,x/b\,)\ Fb\ 1/EJ\ dx - 1\ \ (-1)\ \ (-1)\ \ Fb^2/EJ$

$= [3/2\,x - 3/4\,x^2/b\,]_o^b\ Fb\ 1/EJ\ -\ 1\ \ (-1)\ \ (-1)\ \ Fb^2/EJ$

$= (3/2\,b - 3/4\,b\,)\ Fb\ 1/EJ\ -\ 1\ \ (-1)\ \ (-1)\ \ Fb^2/EJ = -1/4\ \ Fb^2/EJ$

$L^{Xo}_{GH} = \int_o^b (3/2\,x/b\,)\ Fb\ 1/EJ\ dx - 1\ \ (-1)\ \ (-1)\ \ Fb^2/EJ = [3/4\,x^2/b\,]_o^b\ Fb\ 1/EJ\ -\ 1\ \ (-1)\ \ (-1)\ \ Fb^2/EJ$

$= (3/4\,b\,)\ Fb\ 1/EJ\ -\ 1\ \ (-1)\ \ (-1)\ \ Fb^2/EJ = -1/4\ \ Fb^2/EJ$

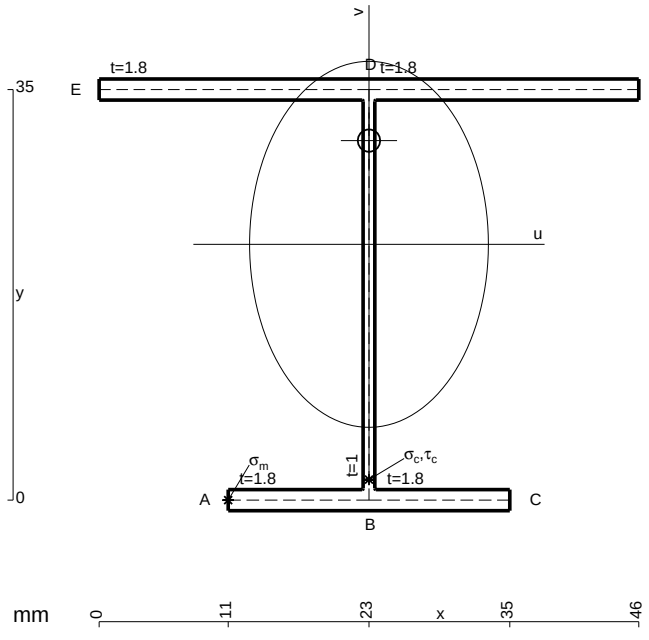

A = 161. mm^2
J_u = 39178. mm^4
J_v = 16674. mm^4
J_t = 147.7 mm^4
y_o = 8.843 mm
y_g = 21.8 mm
N = -500. N
T_y = -1000. N
M_x = -420000. Nmm
x_m = 11. mm
u_m = -12. mm
v_m = -21.8 mm
$\sigma_m = N/A - Mv/J_u$ = -236.9 N/mm^2
x_c = 23. mm
v_c = -21.8 mm
$\sigma_c = N/A - Mv/J_u$ = -236.9 N/mm^2
$\tau_c = TS^*/tJ_u$ = 24.04 N/mm^2
$\tau_g = TS^*/tJ_u$ = 24.04 N/mm^2
t_c = 500. mm
$\sigma_o = \sqrt{\sigma^2 + 3\tau^2}$ = 240.5 N/mm^2

ESΣ05.xxxx.204

@ Adolfo Zavelani Rossi, Politecnico di Milano, vers.27.03.13 01.12.25

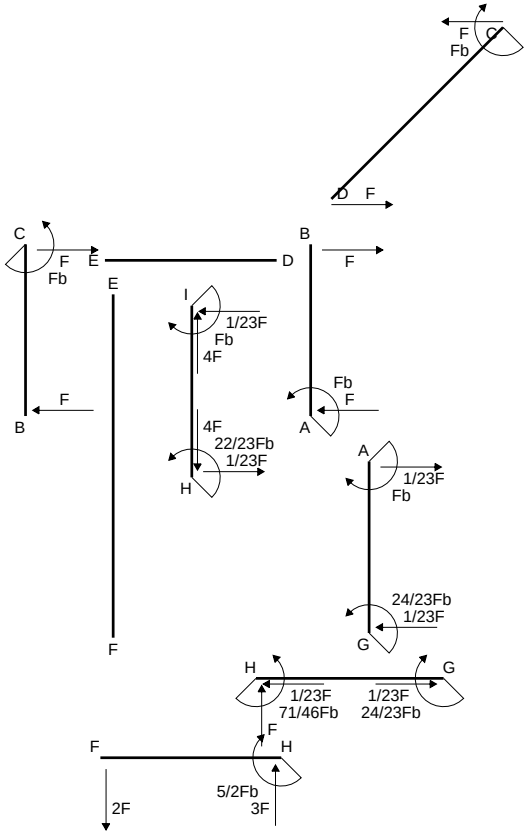
F
Fb
C
D
F
C
F
Fb
E
D
B
F
E
I
1/23F
Fb
4F
Fb
F
B
F
4F
22/23Fb
1/23F
A
H
A
1/23F
Fb
24/23Fb
1/23F
G
F
H
G
1/23F
71/46Fb
1/23F
24/23Fb
F
F
H
5/2Fb
3F
2F

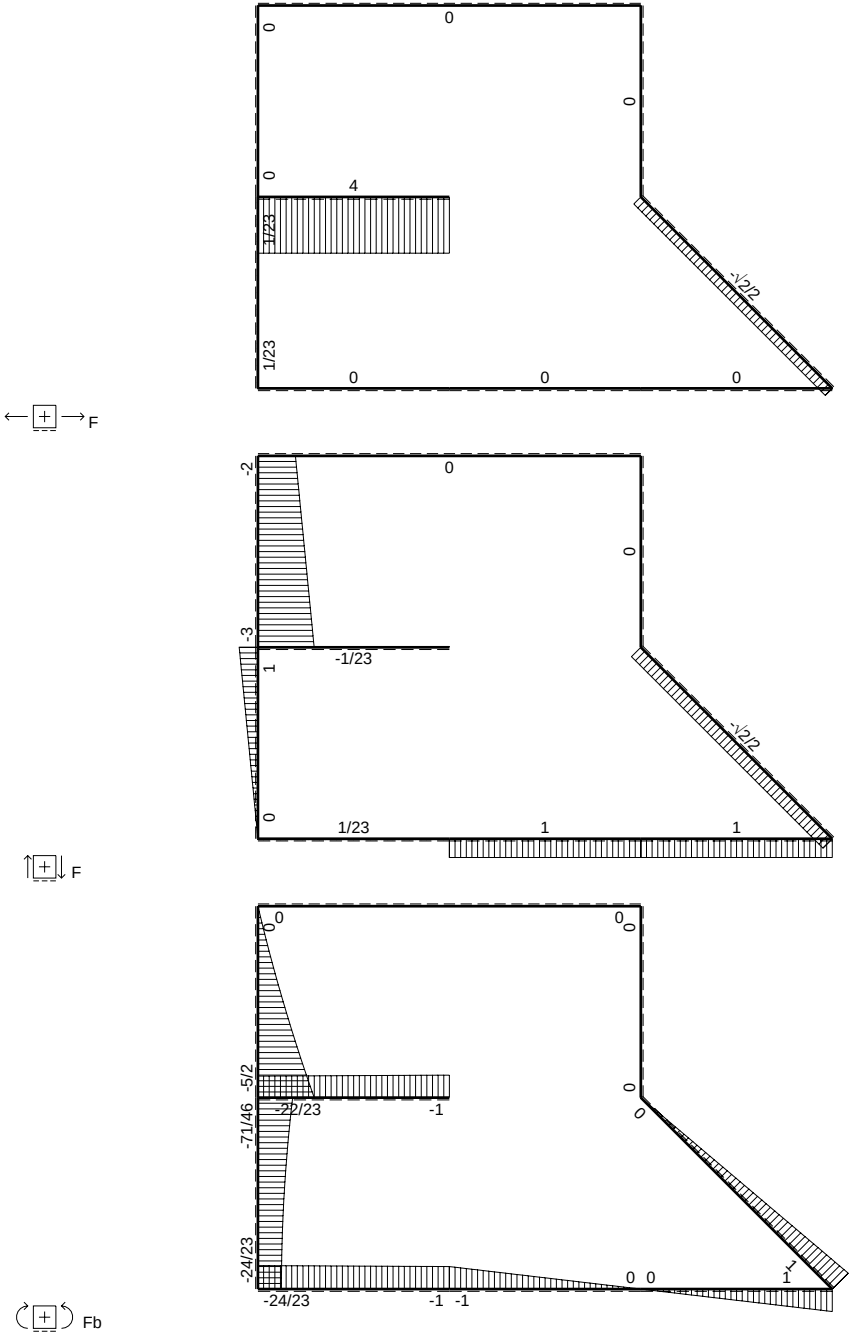
0
0
0
0
4
1/23
-√2/2
1/23
0
0
0
F
-2
0
0
-3
-1/23
1
-√2/2
0
1/23
1
1
F
0
0
0
0
-5/2
-22/23
-1
0
0
-71/46
-24/23
0 0
1
-24/23
-1 -1
Fb

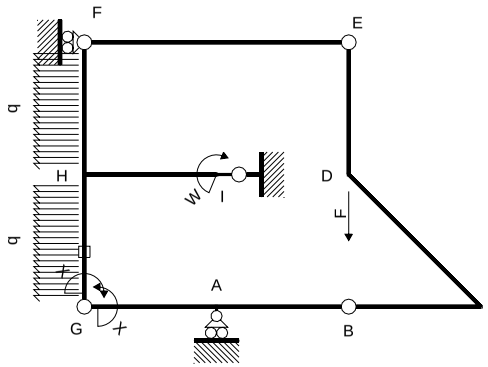

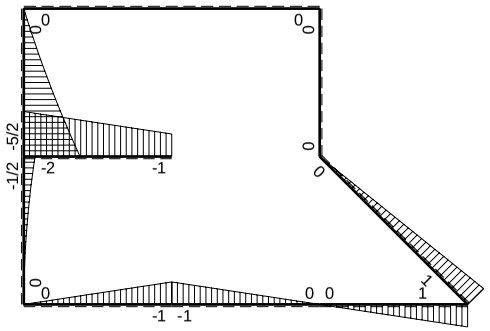

M_0 flessione da carichi assegnati

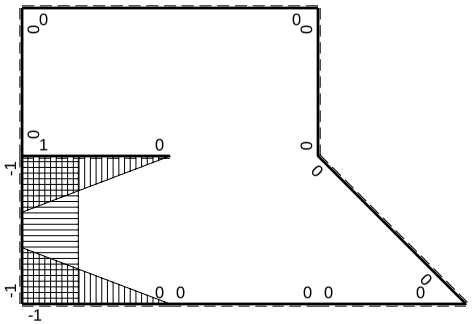

M_x flessione da iperstatica X=1

Quadro contributi PLV per iperstatica $X=W_{GA}$

→	$M_x(x)$	$M_0(x)$	M_xM_0	M_xM_x	$\int M_xM_0/EJdx$	$\int XM_xM_x/EJdx$
AB b	0	-Fb+Fx	0	0	0	0
BA b	0	Fx	0	0		
BC b	0	Fx	0	0	0	0
CB b	0	-Fb+Fx	0	0		
CD √2b	0	Fb-√2/2Fx	0	0	0	0
DE b	0	0	0	0	0	0
ED b	0	0	0	0		
EF 2b	0	0	0	0	0	0
FE 2b	0	0	0	0		
GA b	-1+x/b	-Fx	$Fx-Fx^2/b$	$1-2x/b+x^2/b^2$	$1/6Fb^2/EJ$	$1/3Xb/EJ$
AG b	x/b	Fb-Fx	$Fx-Fx^2/b$	x^2/b^2		
FH b	0	$-2Fx-1/2qx^2$	0	0	0	0
HF b	0	$5/2Fb-3Fx+1/2qx^2$	0	0		
HI b	1-x/b	-2Fb+Fx	$-2Fb+3Fx-Fx^2/b$	$1-2x/b+x^2/b^2$	$-5/6Fb^2/EJ$	$1/3Xb/EJ$
IH b	-x/b	Fb+Fx	$-Fx-Fx^2/b$	x^2/b^2		
HG b	-1	$-1/2Fb+Fx-1/2qx^2$	$1/2Fb-Fx+1/2Fx^2/b$	1	$1/6Fb^2/EJ$	Xb/EJ
GH b	1	$1/2qx^2$	$1/2Fx^2/b$	1		
HG	elongazione asta $N_{1HG}\varepsilon_{HG}L_{HG}$				$-Fb^2/EJ$	
A	molla nodo $-V_{1A}(V_{0A}+XV_{1A})/k_A$				$-1/2Fb^2/EJ$	$1/4Xb/EJ$
	totali				$-2Fb^2/EJ$	$23/12Xb/EJ$
	iperstatica $X=W_{GA}$				24/23Fb	

Sviluppi di calcolo iperstatica

$L^{XX}_{GA} = \int_o^b (1 - 2\,x/b + x^2/b^2)\ 1/EJ\ dx = [\,x - x^2/b + 1/3\,x^3/b^2\,]_o^b\ 1/EJ$

$= (\,b - b + 1/3\,b\,)\ 1/EJ\ = 1/3\ b/EJ$

$L^{XX}_{AG} = \int_o^b (\,x^2/b^2\,)\ 1/EJ\ dx = [1/3\,x^3/b^2\,]_o^b\ 1/EJ$

$= (1/3\,b\,)\ 1/EJ\ = 1/3\ b/EJ$

$L^{XX}_{HI} = \int_o^b (1 - 2\,x/b + x^2/b^2)\ 1/EJ\ dx = [\,x - x^2/b + 1/3\,x^3/b^2\,]_o^b\ 1/EJ$

$= (\,b - b + 1/3\,b\,)\ 1/EJ\ = 1/3\ b/EJ$

$L^{XX}_{IH} = \int_o^b (\,x^2/b^2\,)\ 1/EJ\ dx = [1/3\,x^3/b^2\,]_o^b\ 1/EJ$

$= (1/3\,b\,)\ 1/EJ\ = 1/3\ b/EJ$

$L^{XX}_{HG} = \int_o^b (1)\ 1/EJ\ dx = [\,x\,]_o^b\ 1/EJ$

$= (\,b\,)\ 1/EJ\ =\ b/EJ$

$L^{XX}_{GH} = \int_o^b (1)\ 1/EJ\ dx = [\,x\,]_o^b\ 1/EJ$

$= (\,b\,)\ 1/EJ\ =\ b/EJ$

$L^{Xo}_{GA} = \int_o^b (\,x/b - x^2/b^2\,)\ Fb\ 1/EJ\ dx = [1/2\,x^2/b - 1/3\,x^3/b^2\,]_o^b\ Fb\ 1/EJ$

$= (1/2\,b - 1/3\,b\,)\ Fb\ 1/EJ\ = 1/6\ Fb^2/EJ$

$L^{Xo}_{AG} = \int_o^b (\,x/b - x^2/b^2\,)\ Fb\ 1/EJ\ dx = [1/2\,x^2/b - 1/3\,x^3/b^2\,]_o^b\ Fb\ 1/EJ$

$= (1/2\,b - 1/3\,b\,)\ Fb\ 1/EJ\ = 1/6\ Fb^2/EJ$

$L^{Xo}_{HI} = \int_o^b (-2 + 3\,x/b - x^2/b^2\,)\ Fb\ 1/EJ\ dx = [-2\,x + 3/2\,x^2/b - 1/3\,x^3/b^2\,]_o^b\ Fb\ 1/EJ$

$= (-2\,b + 3/2\,b - 1/3\,b\,)\ Fb\ 1/EJ\ = -5/6\ Fb^2/EJ$

$L^{Xo}_{IH} = \int_o^b (-\,x/b - x^2/b^2\,)\ Fb\ 1/EJ\ dx = [-1/2\,x^2/b - 1/3\,x^3/b^2\,]_o^b\ Fb\ 1/EJ$

$= (-1/2\,b - 1/3\,b\,)\ Fb\ 1/EJ\ = -5/6\ Fb^2/EJ$

$L^{Xo}_{HG} = \int_o^b (1/2 - x/b + 1/2\,x^2/b^2\,)\ Fb\ 1/EJ\ dx - 1\ \ (-1)\ \ (-1)\ \ Fb^2/EJ$

$= [1/2\,x - 1/2\,x^2/b + 1/6\,x^3/b^2\,]_o^b\ Fb\ 1/EJ\ - 1\ \ (-1)\ \ (-1)\ \ Fb^2/EJ$

$= (1/2\,b - 1/2\,b + 1/6\,b\,)\ Fb\ 1/EJ\ - 1\ \ (-1)\ \ (-1)\ \ Fb^2/EJ = -5/6\ Fb^2/EJ$

$L^{Xo}_{GH} = \int_o^b (1/2\,x^2/b^2\,)\ Fb\ 1/EJ\ dx - 1\ \ (-1)\ \ (-1)\ \ Fb^2/EJ = [1/6\,x^3/b^2\,]_o^b\ Fb\ 1/EJ\ - 1\ \ (-1)\ \ (-1)\ \ Fb^2/EJ$

$= (1/6\,b\,)\ Fb\ 1/EJ\ - 1\ \ (-1)\ \ (-1)\ \ Fb^2/EJ = -5/6\ Fb^2/EJ$

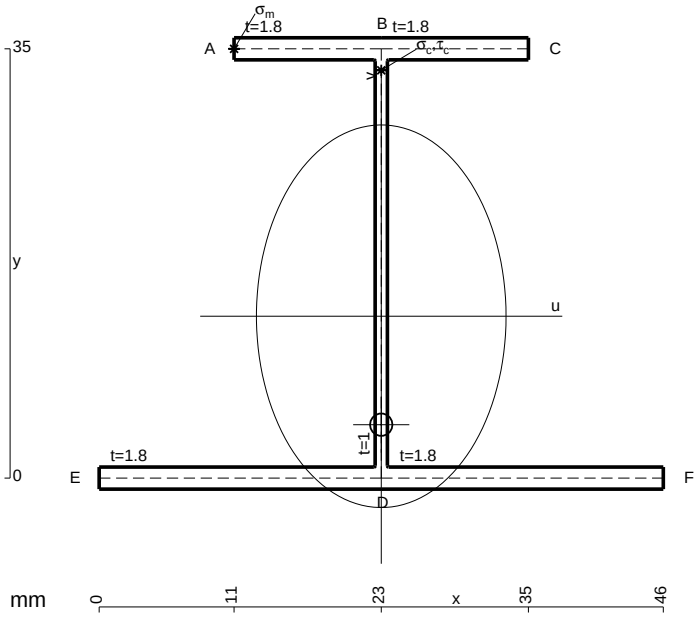

$A = 161.\ mm^2$
$J_u = 39178.\ mm^4$
$J_v = 16674.\ mm^4$
$J_t = 147.7\ mm^4$
$y_o = -8.843\ mm$
$y_g = 13.2\ mm$
$T_y = -930.\ N$
$M_x = -348750.\ Nmm$
$x_m = 11.\ mm$
$y_m = 35.\ mm$
$u_m = -12.\ mm$
$v_m = 21.8\ mm$
$\sigma_m = -Mv/J_u = 194.1\ N/mm^2$
$x_c = 23.\ mm$
$y_c = 35.\ mm$
$v_c = 21.8\ mm$
$\sigma_c = -Mv/J_u = 194.1\ N/mm^2$
$\tau_c = TS^*/tJ_u = 22.36\ N/mm^2$
$\tau_g = TS^*/tJ_u = 22.36\ N/mm^2$
$t_c = 310.\ mm$
$\sigma_o = \sqrt{\sigma^2 + 3\tau^2} = 197.9\ N/mm^2$

ESΣ05.xxxx.205

@ Adolfo Zavelani Rossi, Politecnico di Milano, vers.27.03.13 01.12.25

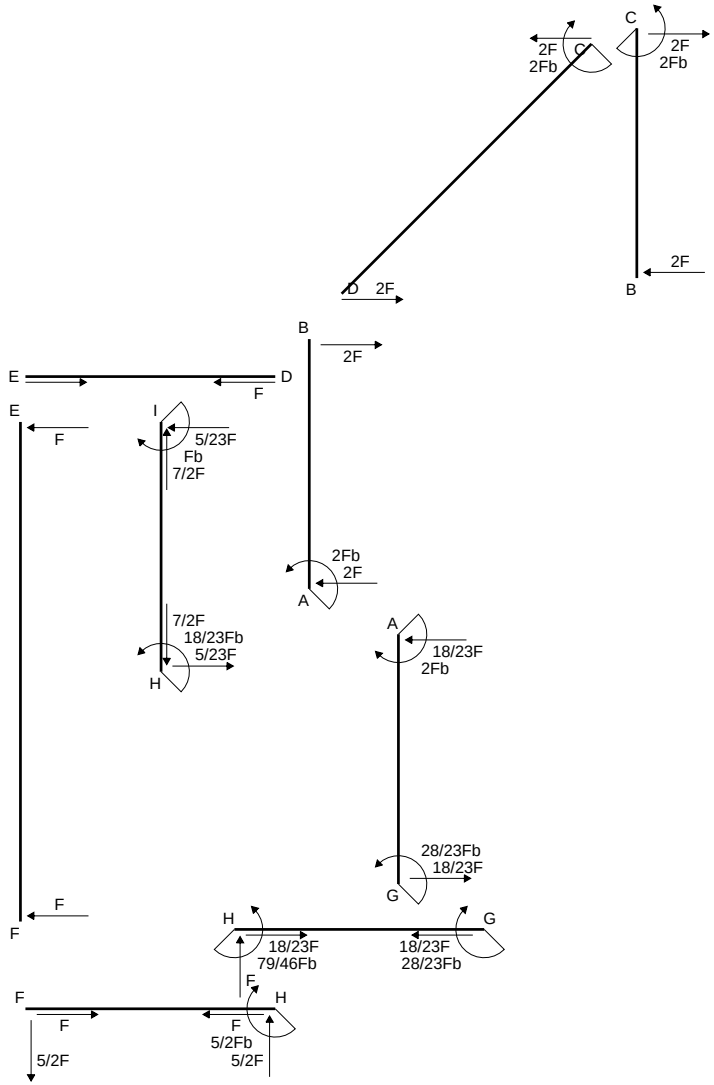
C
2F
2Fb
C
2F
2Fb
D
2F
2F
B
B
2F
E
D
F
E
F
I
5/23F
Fb
7/2F
2Fb
2F
A
7/2F
18/23Fb
5/23F
H
A
18/23F
2Fb
28/23Fb
18/23F
G
F
F
H
G
18/23F
79/46Fb
18/23F
28/23Fb
F
F
H
F
F
5/2Fb
5/2F
5/2F

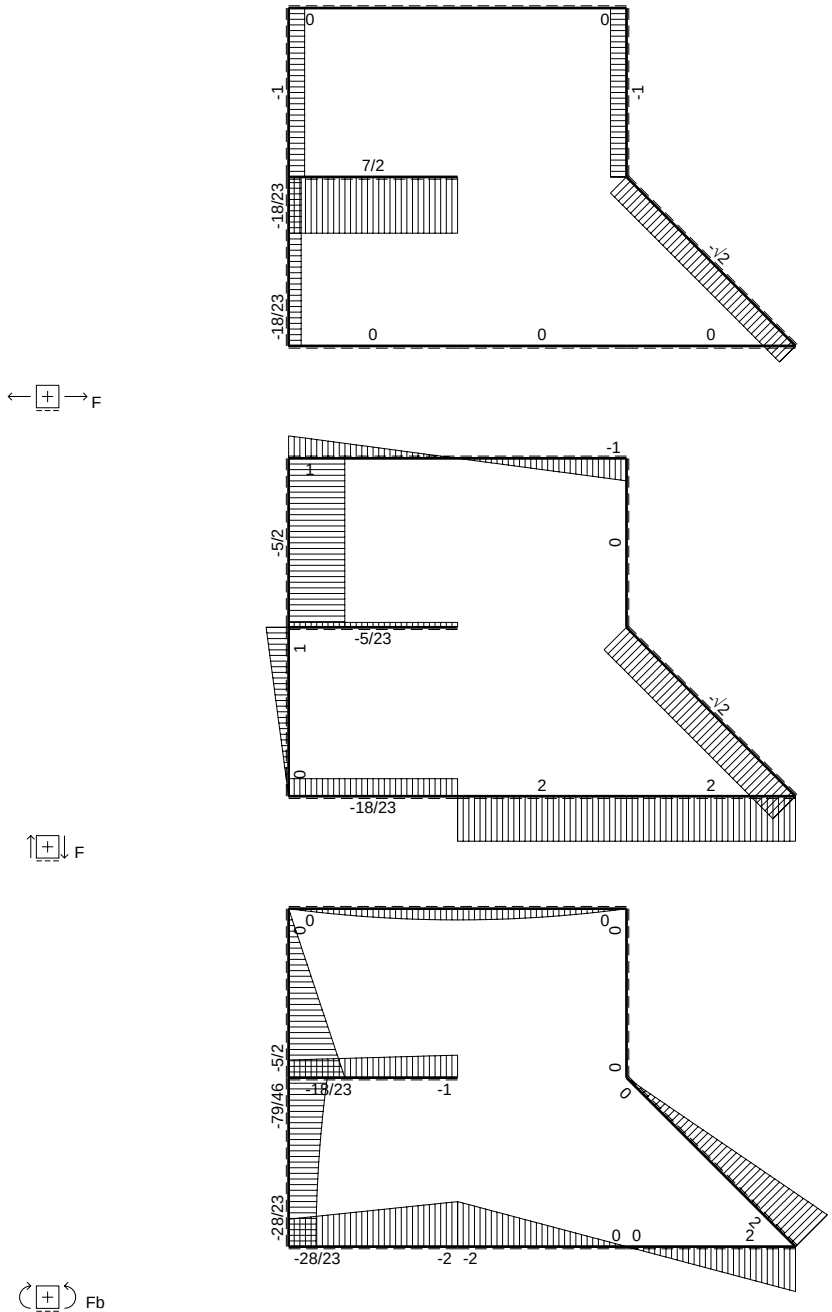
F
0
0
-1
-1
7/2
-18/23
-18/23
-½
0
0
0
F
1
-1
-5/2
0
-5/23
1
-½
0
2
2
-18/23
Fb
0
0
0
-5/2
-79/46
-28/23
-18/23
-1
0
0
0 0
2
2
-28/23
-2 -2

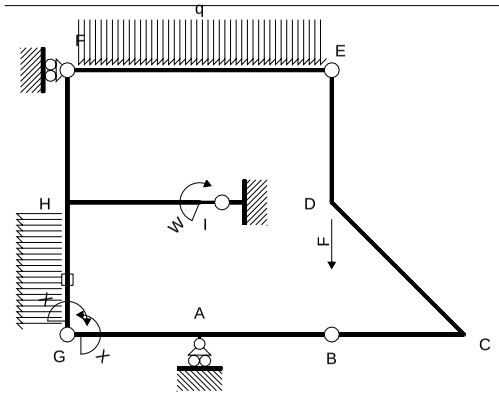

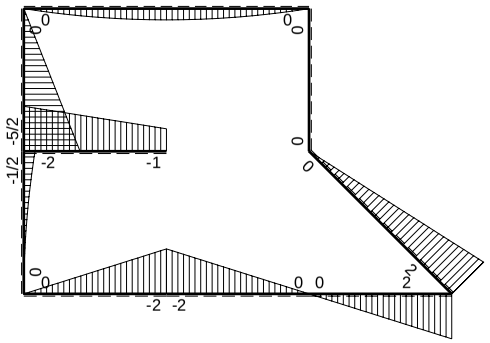

M_0 flessione da carichi assegnati

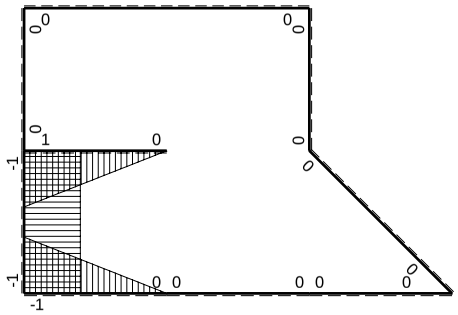

M_x flessione da iperstatica X=1

Quadro contributi PLV per iperstatica $X=W_{GA}$

→	$M_x(x)$	$M_o(x)$	M_xM_o	M_xM_x	$\int M_xM_o/EJdx$	$\int XM_xM_x/EJdx$
AB b	0	-2Fb+2Fx	0	0	0	0
BA b	0	2Fx	0	0		
BC b	0	2Fx	0	0	0	0
CB b	0	-2Fb+2Fx	0	0		
CD √2b	0	2Fb-√2Fx	0	0	0	0
DE b	0	0	0	0	0	0
ED b	0	0	0	0		
EF 2b	0	$-Fx+1/2qx^2$	0	0	0	0
FE 2b	0	$Fx-1/2qx^2$	0	0		
GA b	-1+x/b	-2Fx	$2Fx-2Fx^2/b$	$1-2x/b+x^2/b^2$	$1/3Fb^2/EJ$	1/3Xb/EJ
AG b	x/b	2Fb-2Fx	$2Fx-2Fx^2/b$	x^2/b^2		
FH b	0	-5/2Fx	0	0	0	0
HF b	0	5/2Fb-5/2Fx	0	0		
HI b	1-x/b	-2Fb+Fx	$-2Fb+3Fx-Fx^2/b$	$1-2x/b+x^2/b^2$	$-5/6Fb^2/EJ$	1/3Xb/EJ
IH b	-x/b	Fb+Fx	$-Fx-Fx^2/b$	x^2/b^2		
HG b	-1	$-1/2Fb+Fx-1/2qx^2$	$1/2Fb-Fx+1/2Fx^2/b$	1	$1/6Fb^2/EJ$	Xb/EJ
GH b	1	$1/2qx^2$	$1/2Fx^2/b$	1		
HG	elongazione asta $N_{1HG}\varepsilon_{HG}L_{HG}$				$-Fb^2/EJ$	
A	molla nodo $-V_{1A}(V_{0A}+XV_{1A})/k_A$				$-Fb^2/EJ$	1/4Xb/EJ
	totali				$-7/3Fb^2/EJ$	23/12Xb/EJ
	iperstatica $X=W_{GA}$				28/23Fb	

Sviluppi di calcolo iperstatica

$L^{XX}_{GA} = \int_o^b (1 - 2\,x/b + x^2/b^2)\ 1/EJ\ dx = [\,x - x^2/b + 1/3\,x^3/b^2\,]_o^b\ 1/EJ$

$= (\,b - b + 1/3\,b\,)\ 1/EJ\ = 1/3\ b/EJ$

$L^{XX}_{AG} = \int_o^b (\,x^2/b^2\,)\ 1/EJ\ dx = [1/3\,x^3/b^2\,]_o^b\ 1/EJ$

$= (1/3\,b\,)\ 1/EJ\ = 1/3\ b/EJ$

$L^{XX}_{HI} = \int_o^b (1 - 2\,x/b + x^2/b^2)\ 1/EJ\ dx = [\,x - x^2/b + 1/3\,x^3/b^2\,]_o^b\ 1/EJ$

$= (\,b - b + 1/3\,b\,)\ 1/EJ\ = 1/3\ b/EJ$

$L^{XX}_{IH} = \int_o^b (\,x^2/b^2\,)\ 1/EJ\ dx = [1/3\,x^3/b^2\,]_o^b\ 1/EJ$

$= (1/3\,b\,)\ 1/EJ\ = 1/3\ b/EJ$

$L^{XX}_{HG} = \int_o^b (1)\ 1/EJ\ dx = [\,x\,]_o^b\ 1/EJ$

$= (\,b\,)\ 1/EJ\ =\ b/EJ$

$L^{XX}_{GH} = \int_o^b (1)\ 1/EJ\ dx = [\,x\,]_o^b\ 1/EJ$

$= (\,b\,)\ 1/EJ\ =\ b/EJ$

$L^{Xo}_{GA} = \int_o^b (2\,x/b - 2\,x^2/b^2)\ Fb\ 1/EJ\ dx = [\,x^2/b - 2/3\,x^3/b^2\,]_o^b\ Fb\ 1/EJ$

$= (\,b - 2/3\,b\,)\ Fb\ 1/EJ\ = 1/3\ Fb^2/EJ$

$L^{Xo}_{AG} = \int_o^b (2\,x/b - 2\,x^2/b^2)\ Fb\ 1/EJ\ dx = [\,x^2/b - 2/3\,x^3/b^2\,]_o^b\ Fb\ 1/EJ$

$= (\,b - 2/3\,b\,)\ Fb\ 1/EJ\ = 1/3\ Fb^2/EJ$

$L^{Xo}_{HI} = \int_o^b (-2 + 3\,x/b - x^2/b^2)\ Fb\ 1/EJ\ dx = [-2\,x + 3/2\,x^2/b - 1/3\,x^3/b^2\,]_o^b\ Fb\ 1/EJ$

$= (-2\,b + 3/2\,b - 1/3\,b\,)\ Fb\ 1/EJ\ = -5/6\ Fb^2/EJ$

$L^{Xo}_{IH} = \int_o^b (-\,x/b - x^2/b^2)\ Fb\ 1/EJ\ dx = [-1/2\,x^2/b - 1/3\,x^3/b^2\,]_o^b\ Fb\ 1/EJ$

$= (-1/2\,b - 1/3\,b\,)\ Fb\ 1/EJ\ = -5/6\ Fb^2/EJ$

$L^{Xo}_{HG} = \int_o^b (1/2 - x/b + 1/2\,x^2/b^2)\ Fb\ 1/EJ\ dx - 1\ \ (-1)\ \ (-1)\ \ Fb^2/EJ$

$= [1/2\,x - 1/2\,x^2/b + 1/6\,x^3/b^2\,]_o^b\ Fb\ 1/EJ\ -\ 1\ \ (-1)\ \ (-1)\ \ Fb^2/EJ$

$= (1/2\,b - 1/2\,b + 1/6\,b\,)\ Fb\ 1/EJ\ -\ 1\ \ (-1)\ \ (-1)\ \ Fb^2/EJ = -5/6\ \ Fb^2/EJ$

$L^{Xo}_{GH} = \int_o^b (1/2\,x^2/b^2\,)\ Fb\ 1/EJ\ dx - 1\ \ (-1)\ \ (-1)\ \ Fb^2/EJ = [1/6\,x^3/b^2\,]_o^b\ Fb\ 1/EJ\ -\ 1\ \ (-1)\ \ (-1)\ \ Fb^2/EJ$

$= (1/6\,b\,)\ Fb\ 1/EJ\ -\ 1\ \ (-1)\ \ (-1)\ \ Fb^2/EJ = -5/6\ \ Fb^2/EJ$

PROCEDIMENTO E RISULTATI Nome: ESΣ05.xxxx.206

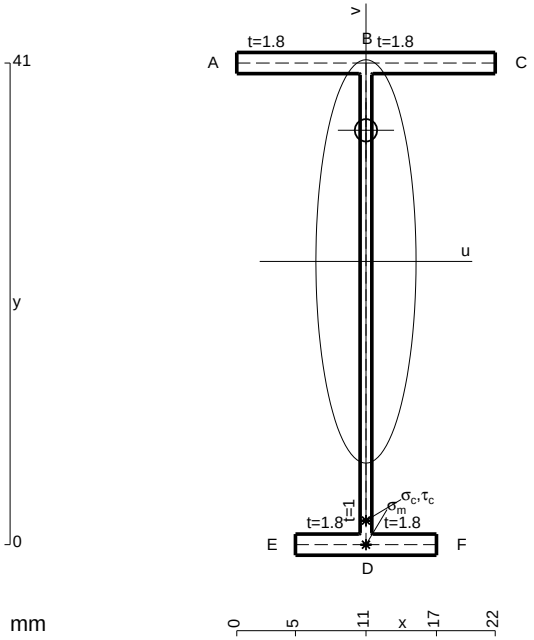

A = 102.2 mm^2
J_u = 30130. mm^4
J_v = 1856. mm^4
J_t = 79.76 mm^4
y_o = 11.16 mm
y_g = 24.11 mm
N = -180. N
T_y = -450. N
M_x = -252000. Nmm
x_m = 11. mm
v_m = -24.11 mm
$\sigma_m = N/A - Mv/J_u$ = -203.4 N/mm^2
y_c = 3. mm
u_c = -11. mm
v_c = -21.11 mm
$\sigma_c = N/A - Mv/J_u$ = -203.4 N/mm^2
$\tau_c = TS^*/tJ_u$ = 7.778 N/mm^2
$\tau_g = TS^*/tJ_u$ = 7.778 N/mm^2
t_c = 180. mm
$\sigma_o = \sqrt{\sigma^2 + 3\tau^2}$ = 203.9 N/mm^2

@ Adolfo Zavelani Rossi, Politecnico di Milano, vers.27.03.13 01.12.25

ESΣ05.xxxx.206

@ Adolfo Zavelani Rossi, Politecnico di Milano, vers.27.03.13 01.12.25

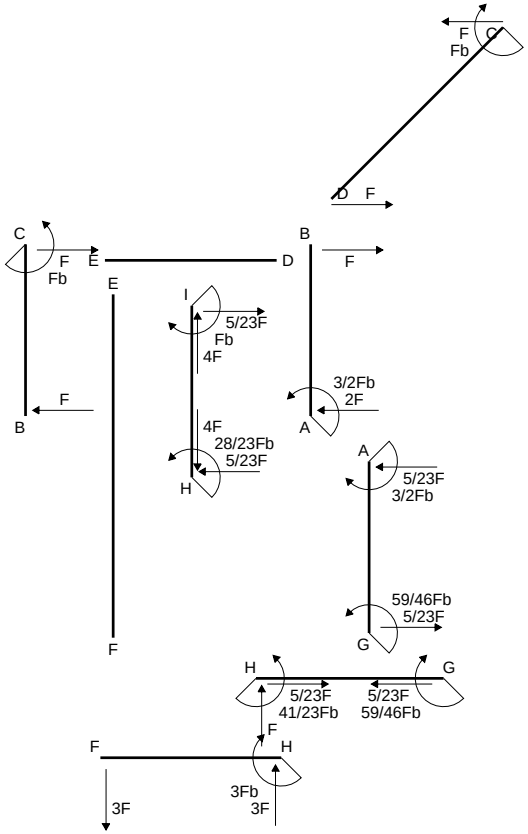
F
Fb
C
D
F
C
F
Fb
E
D
B
F
E
I
5/23F
Fb
4F
3/2Fb
2F
F
B
A
4F
28/23Fb
5/23F
H
A
5/23F
3/2Fb
59/46Fb
5/23F
G
F
H
G
5/23F
41/23Fb
5/23F
59/46Fb
F
F
H
3Fb
3F
3F

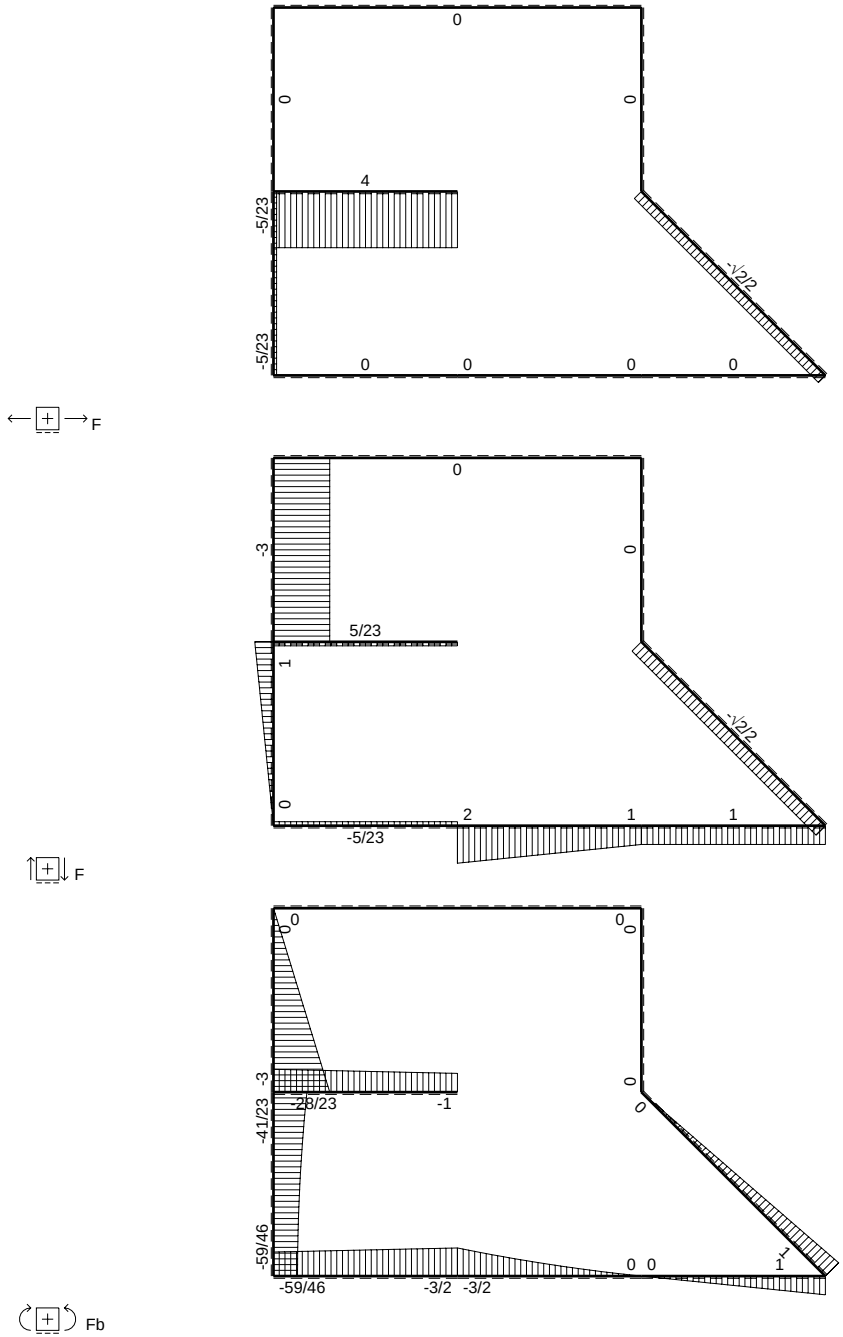
0
0
0
4
-5/23
-5/23
-√2/2
0
0
0
0
F
0
-3
0
5/23
1
-√2/2
0
2
1
1
-5/23
F
0
0
0
0
-3
-28/23
-1
0
0
-41/23
-59/46
0 0
1
-59/46
-3/2
-3/2
Fb

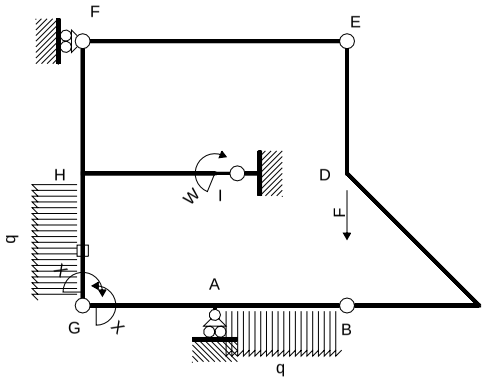

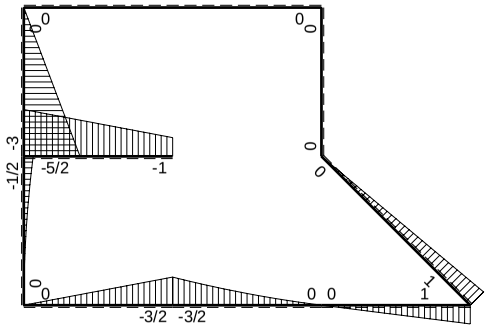

M_0 flessione da carichi assegnati

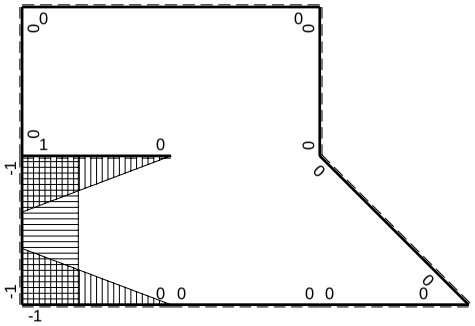

M_x flessione da iperstatica X=1

Quadro contributi PLV per iperstatica $X=W_{GA}$

→	$M_x(x)$	$M_0(x)$	M_xM_0	M_xM_x	$\int M_xM_0/EJdx$	$\int XM_xM_x/EJdx$
AB b	0	$-3/2Fb+2Fx-1/2qx^2$	0	0	0	0
BA b	0	$Fx+1/2qx^2$	0	0		
BC b	0	Fx	0	0	0	0
CB b	0	-Fb+Fx	0	0		
CD √2b	0	Fb-√2/2Fx	0	0	0	0
DE b	0	0	0	0	0	0
ED b	0	0	0	0		
EF 2b	0	0	0	0	0	0
FE 2b	0	0	0	0		
GA b	-1+x/b	-3/2Fx	$3/2Fx-3/2Fx^2/b$	$1-2x/b+x^2/b^2$	$1/4Fb^2/EJ$	1/3Xb/EJ
AG b	x/b	3/2Fb-3/2Fx	$3/2Fx-3/2Fx^2/b$	x^2/b^2		
FH b	0	-3Fx	0	0	0	0
HF b	0	3Fb-3Fx	0	0		
HI b	1-x/b	-5/2Fb+3/2Fx	$-5/2Fb+4Fx-3/2Fx^2/b$	$1-2x/b+x^2/b^2$	$-Fb^2/EJ$	1/3Xb/EJ
IH b	-x/b	Fb+3/2Fx	$-Fx-3/2Fx^2/b$	x^2/b^2		
HG b	-1	$-1/2Fb+Fx-1/2qx^2$	$1/2Fb-Fx+1/2Fx^2/b$	1	$1/6Fb^2/EJ$	Xb/EJ
GH b	1	$1/2qx^2$	$1/2Fx^2/b$	1		
HG	elongazione asta $N_{1HG}\varepsilon_{HG}L_{HG}$				$-Fb^2/EJ$	
A	molla nodo $-V_{1A}(V_{0A}+XV_{1A})/k_A$				$-7/8Fb^2/EJ$	1/4Xb/EJ
	totali				$-59/24Fb^2/EJ$	23/12Xb/EJ
	iperstatica $X=W_{GA}$				59/46Fb	

Sviluppi di calcolo iperstatica

$L^{XX}_{GA} = \int_o^b (1 - 2\,x/b + x^2/b^2)\ 1/EJ\ dx = [\,x - x^2/b + 1/3\,x^3/b^2\,]_o^b\ 1/EJ$

$= (\,b - b + 1/3\,b\,)\ 1/EJ = 1/3\ b/EJ$

$L^{XX}_{AG} = \int_o^b (\,x^2/b^2\,)\ 1/EJ\ dx = [1/3\,x^3/b^2\,]_o^b\ 1/EJ$

$= (1/3\,b\,)\ 1/EJ = 1/3\ b/EJ$

$L^{XX}_{HI} = \int_o^b (1 - 2\,x/b + x^2/b^2)\ 1/EJ\ dx = [\,x - x^2/b + 1/3\,x^3/b^2\,]_o^b\ 1/EJ$

$= (\,b - b + 1/3\,b\,)\ 1/EJ = 1/3\ b/EJ$

$L^{XX}_{IH} = \int_o^b (\,x^2/b^2\,)\ 1/EJ\ dx = [1/3\,x^3/b^2\,]_o^b\ 1/EJ$

$= (1/3\,b\,)\ 1/EJ = 1/3\ b/EJ$

$L^{XX}_{HG} = \int_o^b (1)\ 1/EJ\ dx = [\,x\,]_o^b\ 1/EJ$

$= (\,b\,)\ 1/EJ = b/EJ$

$L^{XX}_{GH} = \int_o^b (1)\ 1/EJ\ dx = [\,x\,]_o^b\ 1/EJ$

$= (\,b\,)\ 1/EJ = b/EJ$

$L^{Xo}_{GA} = \int_o^b (3/2\,x/b - 3/2\,x^2/b^2)\ Fb\ 1/EJ\ dx = [3/4\,x^2/b - 1/2\,x^3/b^2\,]_o^b\ Fb\ 1/EJ$

$= (3/4\,b - 1/2\,b\,)\ Fb\ 1/EJ = 1/4\ Fb^2/EJ$

$L^{Xo}_{AG} = \int_o^b (3/2\,x/b - 3/2\,x^2/b^2)\ Fb\ 1/EJ\ dx = [3/4\,x^2/b - 1/2\,x^3/b^2\,]_o^b\ Fb\ 1/EJ$

$= (3/4\,b - 1/2\,b\,)\ Fb\ 1/EJ = 1/4\ Fb^2/EJ$

$L^{Xo}_{HI} = \int_o^b (-5/2 + 4\,x/b - 3/2\,x^2/b^2)\ Fb\ 1/EJ\ dx = [-5/2\,x + 2\,x^2/b - 1/2\,x^3/b^2\,]_o^b\ Fb\ 1/EJ$

$= (-5/2\,b + 2\,b - 1/2\,b\,)\ Fb\ 1/EJ = -\ Fb^2/EJ$

$L^{Xo}_{IH} = \int_o^b (-\,x/b - 3/2\,x^2/b^2)\ Fb\ 1/EJ\ dx = [-1/2\,x^2/b - 1/2\,x^3/b^2\,]_o^b\ Fb\ 1/EJ$

$= (-1/2\,b - 1/2\,b\,)\ Fb\ 1/EJ = -\ Fb^2/EJ$

$L^{Xo}_{HG} = \int_o^b (1/2 - x/b + 1/2\,x^2/b^2)\ Fb\ 1/EJ\ dx - 1\ \ (-1)\ \ (-1)\ \ Fb^2/EJ$

$= [1/2\,x - 1/2\,x^2/b + 1/6\,x^3/b^2\,]_o^b\ Fb\ 1/EJ\ -\ 1\ \ (-1)\ \ (-1)\ \ Fb^2/EJ$

$= (1/2\,b - 1/2\,b + 1/6\,b\,)\ Fb\ 1/EJ\ -\ 1\ \ (-1)\ \ (-1)\ \ Fb^2/EJ = -5/6\ \ Fb^2/EJ$

$L^{Xo}_{GH} = \int_o^b (1/2\,x^2/b^2)\ Fb\ 1/EJ\ dx - 1\ \ (-1)\ \ (-1)\ \ Fb^2/EJ = [1/6\,x^3/b^2\,]_o^b\ Fb\ 1/EJ\ -\ 1\ \ (-1)\ \ (-1)\ \ Fb^2/EJ$

$= (1/6\,b\,)\ Fb\ 1/EJ\ -\ 1\ \ (-1)\ \ (-1)\ \ Fb^2/EJ = -5/6\ \ Fb^2/EJ$

PROCEDIMENTO E RISULTATI Nome: ESΣ05.xxxx.207

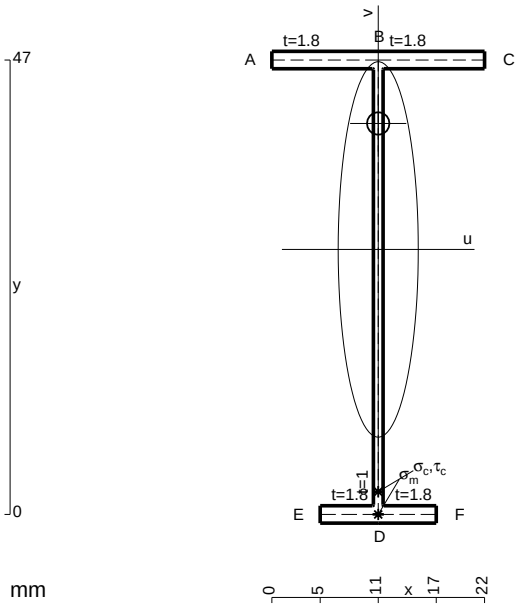

A = 108.2 mm^2
J_u = 40796. mm^4
J_v = 1856. mm^4
J_t = 81.76 mm^4
y_o = 13.03 mm
y_g = 27.41 mm
T_y = -480. N
M_x = -326400. Nmm
x_m = 11. mm
v_m = -27.41 mm
$\sigma_m = -Mv/J_u$ = -219.3 N/mm^2
y_c = 3. mm
u_c = -11. mm
v_c = -24.41 mm
$\sigma_c = -Mv/J_u$ = -219.3 N/mm^2
$\tau_c = TS^*/tJ_u$ = 6.966 N/mm^2
$\tau_g = TS^*/tJ_u$ = 6.966 N/mm^2
t_c = 160. mm
$\sigma_o = \sqrt{\sigma^2 + 3\tau^2}$ = 219.6 N/mm^2

ESΣ05.xxxx.207

@ Adolfo Zavelani Rossi, Politecnico di Milano, vers.27.03.13 01.12.25

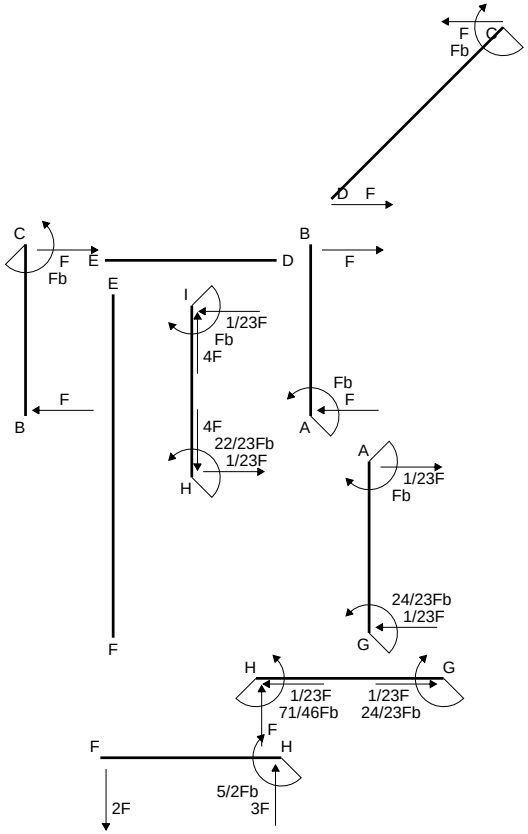
F
Fb
C
D
F
C
F
Fb
E
D
B
F
E
I
1/23F
Fb
4F
Fb
F
F
B
4F
22/23Fb
1/23F
A
H
A
1/23F
Fb
24/23Fb
1/23F
G
F
H
G
1/23F
71/46Fb
1/23F
24/23Fb
F
F
H
5/2Fb
3F
2F

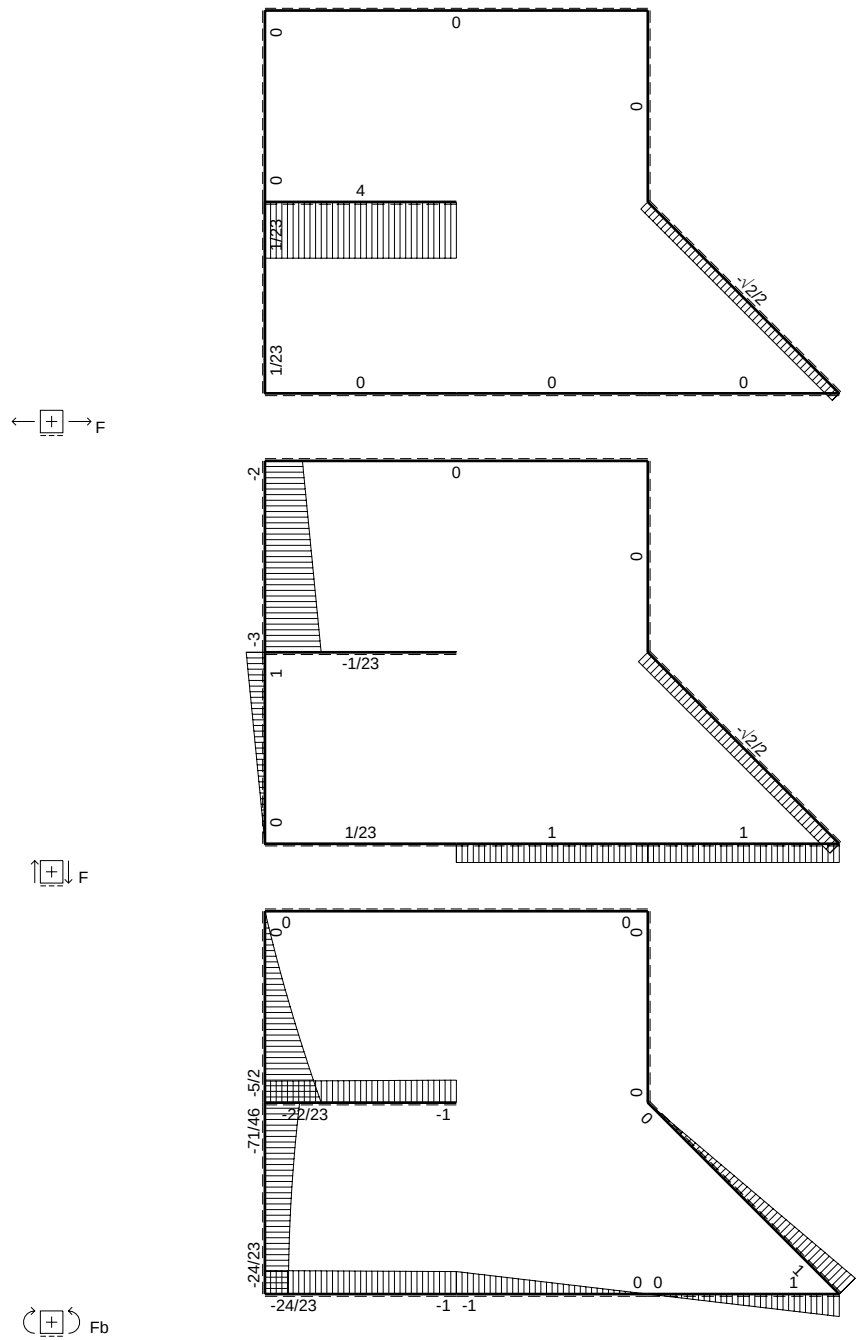
0
0
0
0
4
1/23
-√2/2
1/23
0
0
0
F
-2
0
0
-3
-1/23
1
-√2/2
0
1/23
1
1
F
0
0
0
0
-5/2
-22/23
-1
0
0
-71/46
-24/23
0 0
1
-24/23
-1 -1
Fb

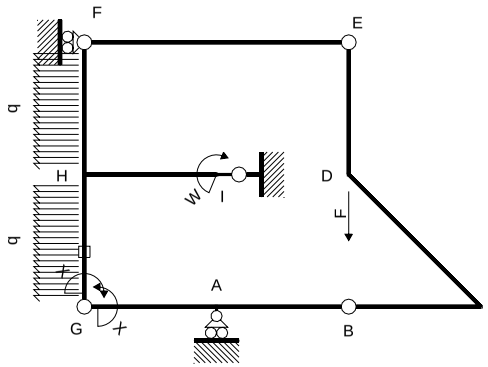

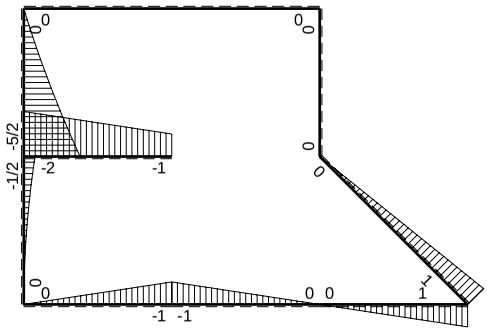

M_0 flessione da carichi assegnati

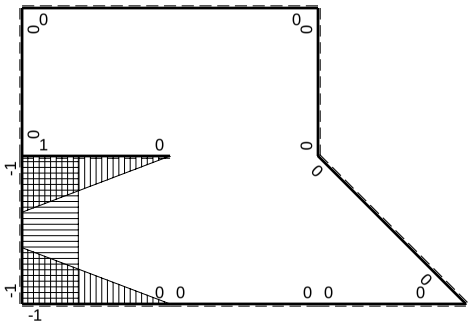

M_x flessione da iperstatica X=1

Quadro contributi PLV per iperstatica $X=W_{GA}$

→	$M_x(x)$	$M_0(x)$	M_xM_0	M_xM_x	$\int M_xM_0/EJdx$	$\int XM_xM_x/EJdx$
AB b	0	-Fb+Fx	0	0	0	0
BA b	0	Fx	0	0		
BC b	0	Fx	0	0	0	0
CB b	0	-Fb+Fx	0	0		
CD √2b	0	Fb-√2/2Fx	0	0	0	0
DE b	0	0	0	0	0	0
ED b	0	0	0	0		
EF 2b	0	0	0	0	0	0
FE 2b	0	0	0	0		
GA b	-1+x/b	-Fx	$Fx-Fx^2/b$	$1-2x/b+x^2/b^2$	$1/6Fb^2/EJ$	$1/3Xb/EJ$
AG b	x/b	Fb-Fx	$Fx-Fx^2/b$	x^2/b^2		
FH b	0	$-2Fx-1/2qx^2$	0	0	0	0
HF b	0	$5/2Fb-3Fx+1/2qx^2$	0	0		
HI b	1-x/b	-2Fb+Fx	$-2Fb+3Fx-Fx^2/b$	$1-2x/b+x^2/b^2$	$-5/6Fb^2/EJ$	$1/3Xb/EJ$
IH b	-x/b	Fb+Fx	$-Fx-Fx^2/b$	x^2/b^2		
HG b	-1	$-1/2Fb+Fx-1/2qx^2$	$1/2Fb-Fx+1/2Fx^2/b$	1	$1/6Fb^2/EJ$	Xb/EJ
GH b	1	$1/2qx^2$	$1/2Fx^2/b$	1		
HG	elongazione asta $N_{1HG}\varepsilon_{HG}L_{HG}$				$-Fb^2/EJ$	
A	molla nodo $-V_{1A}(V_{0A}+XV_{1A})/k_A$				$-1/2Fb^2/EJ$	$1/4Xb/EJ$
	totali				$-2Fb^2/EJ$	$23/12Xb/EJ$
	iperstatica $X=W_{GA}$				24/23Fb	

Sviluppi di calcolo iperstatica

$L^{XX}_{GA} = \int_o^b (1 - 2\,x/b + x^2/b^2)\ 1/EJ\ dx = [\,x - x^2/b + 1/3\,x^3/b^2\,]_o^b\ 1/EJ$

$= (\,b - b + 1/3\,b\,)\ 1/EJ = 1/3\ b/EJ$

$L^{XX}_{AG} = \int_o^b (\,x^2/b^2\,)\ 1/EJ\ dx = [1/3\,x^3/b^2\,]_o^b\ 1/EJ$

$= (1/3\,b)\ 1/EJ = 1/3\ b/EJ$

$L^{XX}_{HI} = \int_o^b (1 - 2\,x/b + x^2/b^2)\ 1/EJ\ dx = [\,x - x^2/b + 1/3\,x^3/b^2\,]_o^b\ 1/EJ$

$= (\,b - b + 1/3\,b\,)\ 1/EJ = 1/3\ b/EJ$

$L^{XX}_{IH} = \int_o^b (\,x^2/b^2\,)\ 1/EJ\ dx = [1/3\,x^3/b^2\,]_o^b\ 1/EJ$

$= (1/3\,b)\ 1/EJ = 1/3\ b/EJ$

$L^{XX}_{HG} = \int_o^b (1)\ 1/EJ\ dx = [\,x\,]_o^b\ 1/EJ$

$= (\,b\,)\ 1/EJ = b/EJ$

$L^{XX}_{GH} = \int_o^b (1)\ 1/EJ\ dx = [\,x\,]_o^b\ 1/EJ$

$= (\,b\,)\ 1/EJ = b/EJ$

$L^{Xo}_{GA} = \int_o^b (\,x/b - x^2/b^2\,)\ Fb\ 1/EJ\ dx = [1/2\,x^2/b - 1/3\,x^3/b^2\,]_o^b\ Fb\ 1/EJ$

$= (1/2\,b - 1/3\,b\,)\ Fb\ 1/EJ = 1/6\ Fb^2/EJ$

$L^{Xo}_{AG} = \int_o^b (\,x/b - x^2/b^2\,)\ Fb\ 1/EJ\ dx = [1/2\,x^2/b - 1/3\,x^3/b^2\,]_o^b\ Fb\ 1/EJ$

$= (1/2\,b - 1/3\,b\,)\ Fb\ 1/EJ = 1/6\ Fb^2/EJ$

$L^{Xo}_{HI} = \int_o^b (-2 + 3\,x/b - x^2/b^2\,)\ Fb\ 1/EJ\ dx = [-2\,x + 3/2\,x^2/b - 1/3\,x^3/b^2\,]_o^b\ Fb\ 1/EJ$

$= (-2\,b + 3/2\,b - 1/3\,b\,)\ Fb\ 1/EJ = -5/6\ Fb^2/EJ$

$L^{Xo}_{IH} = \int_o^b (-\,x/b - x^2/b^2\,)\ Fb\ 1/EJ\ dx = [-1/2\,x^2/b - 1/3\,x^3/b^2\,]_o^b\ Fb\ 1/EJ$

$= (-1/2\,b - 1/3\,b\,)\ Fb\ 1/EJ = -5/6\ Fb^2/EJ$

$L^{Xo}_{HG} = \int_o^b (1/2 - x/b + 1/2\,x^2/b^2\,)\ Fb\ 1/EJ\ dx - 1\ \ (-1)\ \ (-1)\ \ Fb^2/EJ$

$= [1/2\,x - 1/2\,x^2/b + 1/6\,x^3/b^2\,]_o^b\ Fb\ 1/EJ\ -\ 1\ \ (-1)\ \ (-1)\ \ Fb^2/EJ$

$= (1/2\,b - 1/2\,b + 1/6\,b\,)\ Fb\ 1/EJ\ -\ 1\ \ (-1)\ \ (-1)\ \ Fb^2/EJ = -5/6\ \ Fb^2/EJ$

$L^{Xo}_{GH} = \int_o^b (1/2\,x^2/b^2\,)\ Fb\ 1/EJ\ dx - 1\ \ (-1)\ \ (-1)\ \ Fb^2/EJ = [1/6\,x^3/b^2\,]_o^b\ Fb\ 1/EJ\ -\ 1\ \ (-1)\ \ (-1)\ \ Fb^2/EJ$

$= (1/6\,b\,)\ Fb\ 1/EJ\ -\ 1\ \ (-1)\ \ (-1)\ \ Fb^2/EJ = -5/6\ \ Fb^2/EJ$

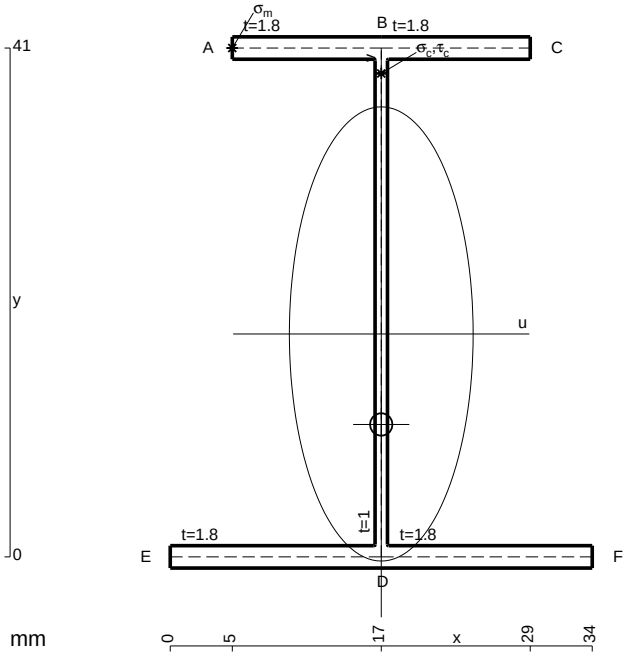

A = 145.4 mm^2
J_u = 48681. mm^4
J_v = 7969. mm^4
J_t = 126.4 mm^4
y_o = -7.294 mm
y_g = 17.96 mm
T_y = -900. N
M_x = -472500. Nmm
x_m = 5. mm
y_m = 41. mm
u_m = -12. mm
v_m = 23.04 mm
$\sigma_m = -Mv/J_u$ = 223.6 N/mm^2
x_c = 17. mm
y_c = 41. mm
v_c = 23.04 mm
$\sigma_c = -Mv/J_u$ = 223.6 N/mm^2
$\tau_c = TS^*/tJ_u$ = 18.4 N/mm^2
$\tau_g = TS^*/tJ_u$ = 18.4 N/mm^2
t_c = 300. mm
$\sigma_o = \sqrt{\sigma^2 + 3\tau^2}$ = 225.9 N/mm^2

ESΣ05.xxxx.208

@ Adolfo Zavelani Rossi, Politecnico di Milano, vers.27.03.13 01.12.25

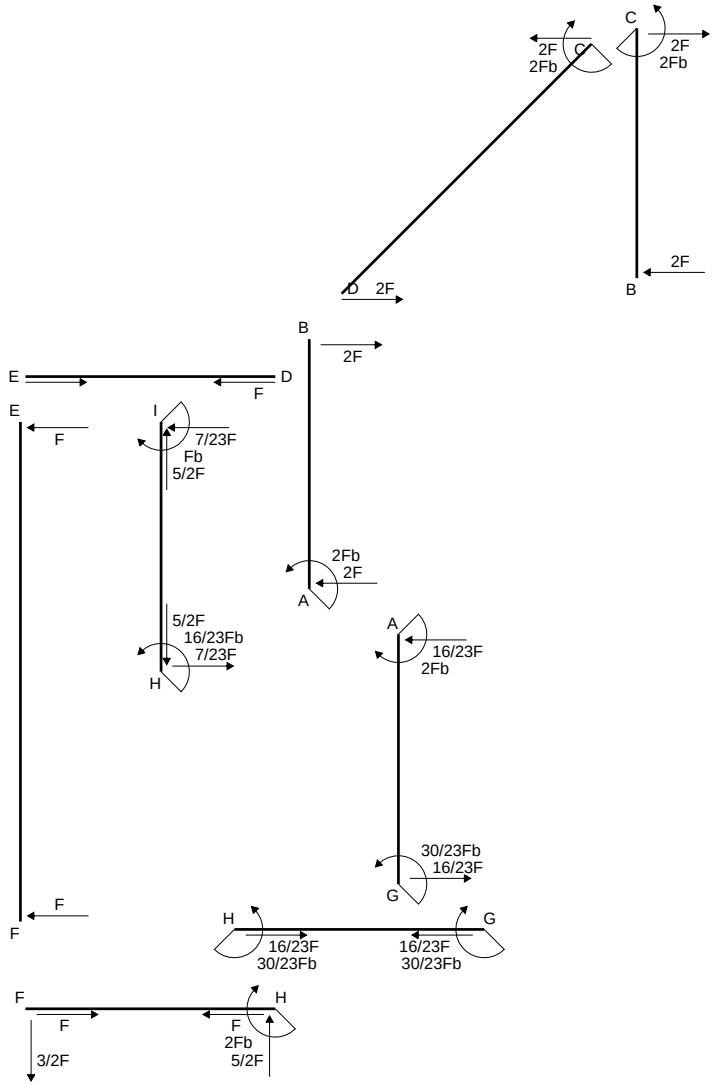
C
2F
2Fb
C
2F
2Fb
D
2F
2F
B
B
2F
E
D
F
E
F
I
7/23F
Fb
5/2F
2Fb
2F
A
5/2F
16/23Fb
7/23F
H
A
16/23F
2Fb
30/23Fb
16/23F
G
F
F
H
G
16/23F
30/23Fb
16/23F
30/23Fb
F
H
F
F
2Fb
5/2F
3/2F

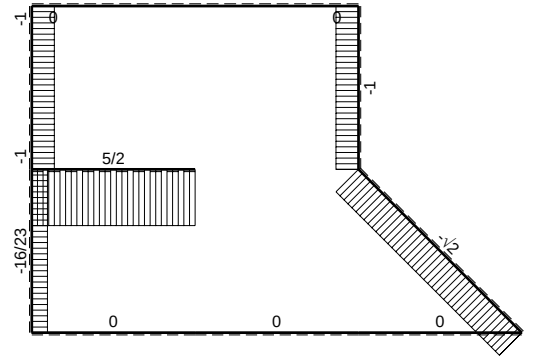
-1
0
0
-1
-1
5/2
-16/23
-√2
0
0
0

F

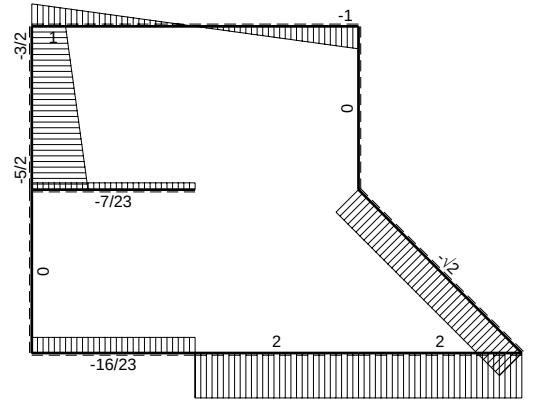
-1
-3/2
1
0
-5/2
-7/23
0
-√2
2
2
-16/23

F

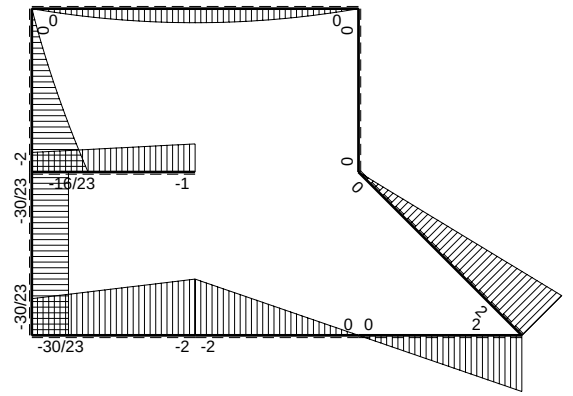
0
0
0
0
-2
-16/23
-1
0
0
-30/23
-30/23
0 0
2
-30/23
-2 -2

Fb

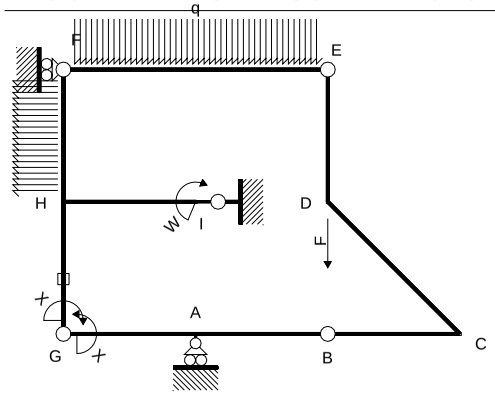

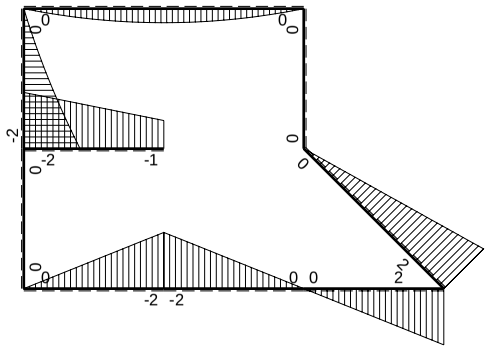

M_0 flessione da carichi assegnati

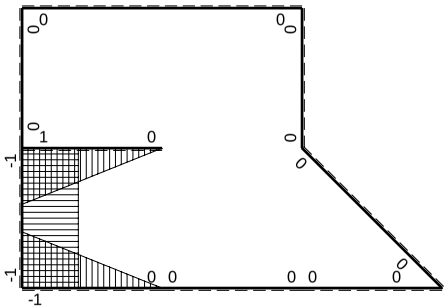

M_x flessione da iperstatica X=1

Quadro contributi PLV per iperstatica $X=W_{GA}$

→	$M_x(x)$	$M_0(x)$	M_xM_0	M_xM_x	$\int M_xM_0/EJdx$	$\int XM_xM_x/EJdx$
AB b	0	-2Fb+2Fx	0	0	0	0
BA b	0	2Fx	0	0		
BC b	0	2Fx	0	0	0	0
CB b	0	-2Fb+2Fx	0	0		
CD √2b	0	2Fb-√2Fx	0	0	0	0
DE b	0	0	0	0	0	0
ED b	0	0	0	0		
EF 2b	0	$-Fx+1/2qx^2$	0	0	0	0
FE 2b	0	$Fx-1/2qx^2$	0	0		
GA b	-1+x/b	-2Fx	$2Fx-2Fx^2/b$	$1-2x/b+x^2/b^2$	$1/3Fb^2/EJ$	1/3Xb/EJ
AG b	x/b	2Fb-2Fx	$2Fx-2Fx^2/b$	x^2/b^2		
FH b	0	$-3/2Fx-1/2qx^2$	0	0	0	0
HF b	0	$2Fb-5/2Fx+1/2qx^2$	0	0		
HI b	1-x/b	-2Fb+Fx	$-2Fb+3Fx-Fx^2/b$	$1-2x/b+x^2/b^2$	$-5/6Fb^2/EJ$	1/3Xb/EJ
IH b	-x/b	Fb+Fx	$-Fx-Fx^2/b$	x^2/b^2		
HG b	-1	0	0	1	0	Xb/EJ
GH b	1	0	0	1		
HG	elongazione asta $N_{1HG}\varepsilon_{HG}L_{HG}$				$-Fb^2/EJ$	
A	molla nodo $-V_{1A}(V_{0A}+XV_{1A})/k_A$				$-Fb^2/EJ$	1/4Xb/EJ
	totali				$-5/2Fb^2/EJ$	23/12Xb/EJ
	iperstatica $X=W_{GA}$				30/23Fb	

Sviluppi di calcolo iperstatica

$L^{XX}_{GA} = \int_o^b (1 - 2\,x/b + x^2/b^2)\ 1/EJ\ dx = [\ x - x^2/b + 1/3\ x^3/b^2\ ]_o^b\ 1/EJ$

$= (\ b - b + 1/3\ b\ )\ 1/EJ\ = 1/3\ b/EJ$

$L^{XX}_{AG} = \int_o^b (\ x^2/b^2\ )\ 1/EJ\ dx = [1/3\ x^3/b^2\ ]_o^b\ 1/EJ$

$= (1/3\ b\ )\ 1/EJ\ = 1/3\ b/EJ$

$L^{XX}_{HI} = \int_o^b (1 - 2\,x/b + x^2/b^2)\ 1/EJ\ dx = [\ x - x^2/b + 1/3\ x^3/b^2\ ]_o^b\ 1/EJ$

$= (\ b - b + 1/3\ b\ )\ 1/EJ\ = 1/3\ b/EJ$

$L^{XX}_{IH} = \int_o^b (\ x^2/b^2\ )\ 1/EJ\ dx = [1/3\ x^3/b^2\ ]_o^b\ 1/EJ$

$= (1/3\ b\ )\ 1/EJ\ = 1/3\ b/EJ$

$L^{XX}_{HG} = \int_o^b (1)\ 1/EJ\ dx = [\ x\ ]_o^b\ 1/EJ$

$= (\ b\ )\ 1/EJ\ =\ b/EJ$

$L^{XX}_{GH} = \int_o^b (1)\ 1/EJ\ dx = [\ x\ ]_o^b\ 1/EJ$

$= (\ b\ )\ 1/EJ\ =\ b/EJ$

$L^{Xo}_{GA} = \int_o^b (2\,x/b - 2\,x^2/b^2)\ Fb\ 1/EJ\ dx = [\ x^2/b - 2/3\ x^3/b^2\ ]_o^b\ Fb\ 1/EJ$

$= (\ b - 2/3\ b\ )\ Fb\ 1/EJ\ = 1/3\ Fb^2/EJ$

$L^{Xo}_{AG} = \int_o^b (2\,x/b - 2\,x^2/b^2)\ Fb\ 1/EJ\ dx = [\ x^2/b - 2/3\ x^3/b^2\ ]_o^b\ Fb\ 1/EJ$

$= (\ b - 2/3\ b\ )\ Fb\ 1/EJ\ = 1/3\ Fb^2/EJ$

$L^{Xo}_{HI} = \int_o^b (-2 + 3\,x/b - x^2/b^2)\ Fb\ 1/EJ\ dx = [-2\,x + 3/2\ x^2/b - 1/3\ x^3/b^2\ ]_o^b\ Fb\ 1/EJ$

$= (-2\ b + 3/2\ b - 1/3\ b\ )\ Fb\ 1/EJ\ = -5/6\ Fb^2/EJ$

$L^{Xo}_{IH} = \int_o^b (-\,x/b - x^2/b^2)\ Fb\ 1/EJ\ dx = [-1/2\ x^2/b - 1/3\ x^3/b^2\ ]_o^b\ Fb\ 1/EJ$

$= (-1/2\ b - 1/3\ b\ )\ Fb\ 1/EJ\ = -5/6\ Fb^2/EJ$

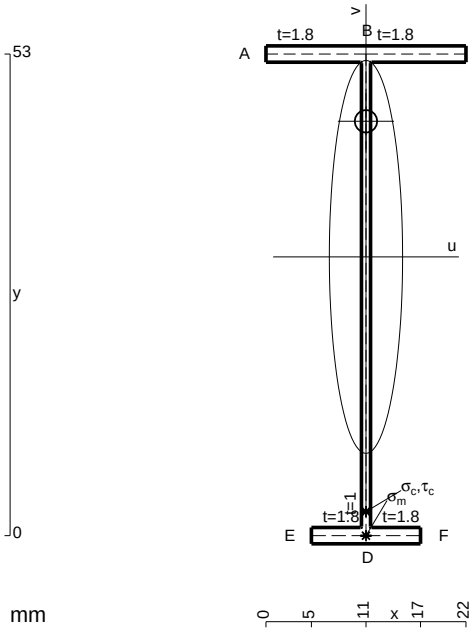

A = 114.2 mm^2
J_u = 53392. mm^4
J_v = 1856. mm^4
J_t = 83.76 mm^4
y_o = 14.92 mm
y_g = 30.68 mm
N = -240. N
T_y = -600. N
M_x = -408000. Nmm
x_m = 11. mm
v_m = -30.68 mm
$\sigma_m = N/A - Mv/J_u$ = -236.5 N/mm^2
y_c = 3. mm
u_c = -11. mm
v_c = -27.68 mm
$\sigma_c = N/A - Mv/J_u$ = -236.5 N/mm^2
$\tau_c = TS^*/tJ_u$ = 7.446 N/mm^2
$\tau_g = TS^*/tJ_u$ = 7.446 N/mm^2
t_c = 240. mm
$\sigma_o = \sqrt{\sigma^2 + 3\tau^2}$ = 236.9 N/mm^2

ESΣ05.xxxx.209

@ Adolfo Zavelani Rossi, Politecnico di Milano, vers.27.03.13 01.12.25

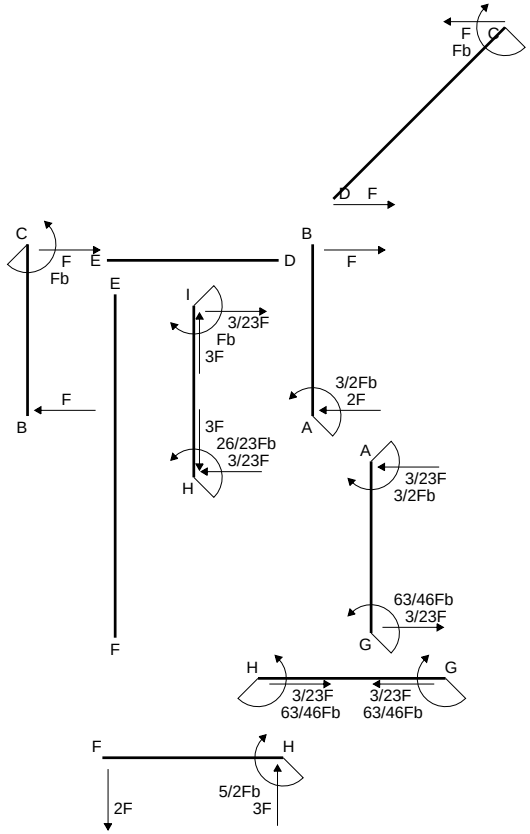
C
F
E
D
B
F
Fb
E
I
3/23F
Fb
3F
3/2Fb
2F
F
B
A
3F
26/23Fb
3/23F
H
A
3/23F
3/2Fb
63/46Fb
3/23F
G
F
H
G
3/23F
63/46Fb
3/23F
63/46Fb
F
H
5/2Fb
3F
2F

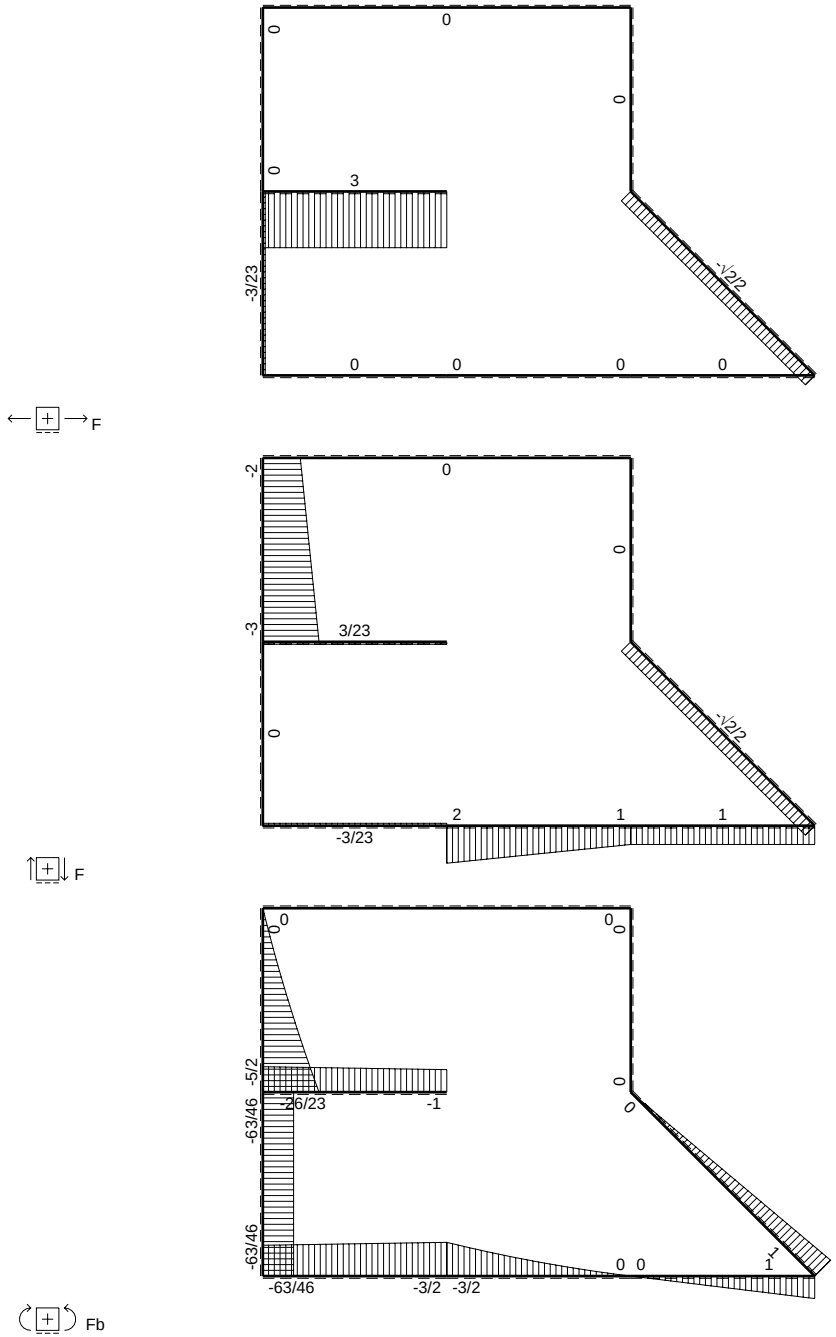
0
0
0
0
3
-3/23
-√2/2
0 0 0 0
F
-2
0
0
-3
3/23
-√2/2
0
2 1 1
-3/23
F
0 0
0 0
-5/2
-63/46
-26/23
-1
0
0
-63/46
0 0
1
-63/46
-3/2 -3/2
Fb

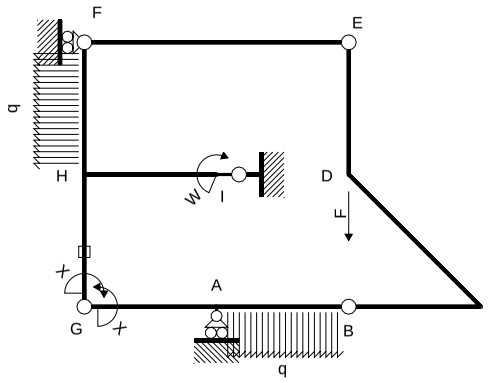

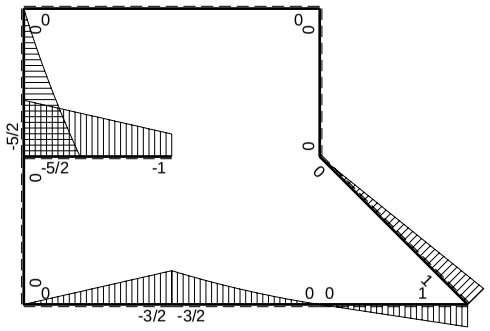

M_0 flessione da carichi assegnati

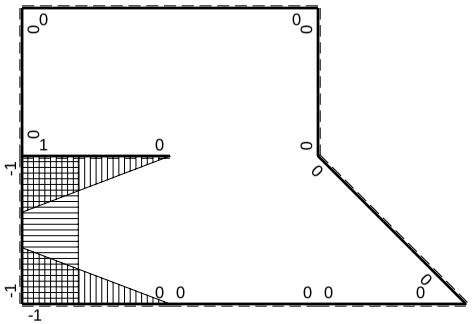

M_x flessione da iperstatica X=1

Quadro contributi PLV per iperstatica $X=W_{GA}$

→	$M_x(x)$	$M_0(x)$	M_xM_0	M_xM_x	$\int M_xM_0/EJdx$	$\int XM_xM_x/EJdx$
AB b	0	$-3/2Fb+2Fx-1/2qx^2$	0	0	0	0
BA b	0	$Fx+1/2qx^2$	0	0		
BC b	0	Fx	0	0	0	0
CB b	0	-Fb+Fx	0	0		
CD √2b	0	Fb-√2/2Fx	0	0	0	0
DE b	0	0	0	0	0	0
ED b	0	0	0	0		
EF 2b	0	0	0	0	0	0
FE 2b	0	0	0	0		
GA b	-1+x/b	-3/2Fx	$3/2Fx-3/2Fx^2/b$	$1-2x/b+x^2/b^2$	$1/4Fb^2/EJ$	1/3Xb/EJ
AG b	x/b	3/2Fb-3/2Fx	$3/2Fx-3/2Fx^2/b$	x^2/b^2		
FH b	0	$-2Fx-1/2qx^2$	0	0	0	0
HF b	0	$5/2Fb-3Fx+1/2qx^2$	0	0		
HI b	1-x/b	-5/2Fb+3/2Fx	$-5/2Fb+4Fx-3/2Fx^2/b$	$1-2x/b+x^2/b^2$	$-Fb^2/EJ$	1/3Xb/EJ
IH b	-x/b	Fb+3/2Fx	$-Fx-3/2Fx^2/b$	x^2/b^2		
HG b	-1	0	0	1	0	Xb/EJ
GH b	1	0	0	1		
HG	elongazione asta $N_{1HG}\varepsilon_{HG}L_{HG}$				$-Fb^2/EJ$	
A	molla nodo $-V_{1A}(V_{0A}+XV_{1A})/k_A$				$-7/8Fb^2/EJ$	1/4Xb/EJ
	totali				$-21/8Fb^2/EJ$	23/12Xb/EJ
	iperstatica $X=W_{GA}$				63/46Fb	

Sviluppi di calcolo iperstatica

$L^{XX}_{GA} = \int_o^b (1 - 2\,x/b + x^2/b^2)\ 1/EJ\ dx = [\,x - x^2/b + 1/3\,x^3/b^2\,]_o^b\ 1/EJ$

$= (\,b - b + 1/3\,b\,)\ 1/EJ\ = 1/3\ b/EJ$

$L^{XX}_{AG} = \int_o^b (\,x^2/b^2\,)\ 1/EJ\ dx = [1/3\,x^3/b^2\,]_o^b\ 1/EJ$

$= (1/3\,b\,)\ 1/EJ\ = 1/3\ b/EJ$

$L^{XX}_{HI} = \int_o^b (1 - 2\,x/b + x^2/b^2)\ 1/EJ\ dx = [\,x - x^2/b + 1/3\,x^3/b^2\,]_o^b\ 1/EJ$

$= (\,b - b + 1/3\,b\,)\ 1/EJ\ = 1/3\ b/EJ$

$L^{XX}_{IH} = \int_o^b (\,x^2/b^2\,)\ 1/EJ\ dx = [1/3\,x^3/b^2\,]_o^b\ 1/EJ$

$= (1/3\,b\,)\ 1/EJ\ = 1/3\ b/EJ$

$L^{XX}_{HG} = \int_o^b (1)\ 1/EJ\ dx = [\,x\,]_o^b\ 1/EJ$

$= (\,b\,)\ 1/EJ\ = b/EJ$

$L^{XX}_{GH} = \int_o^b (1)\ 1/EJ\ dx = [\,x\,]_o^b\ 1/EJ$

$= (\,b\,)\ 1/EJ\ = b/EJ$

$L^{Xo}_{GA} = \int_o^b (3/2\,x/b - 3/2\,x^2/b^2)\ Fb\ 1/EJ\ dx = [3/4\,x^2/b - 1/2\,x^3/b^2\,]_o^b\ Fb\ 1/EJ$

$= (3/4\,b - 1/2\,b\,)\ Fb\ 1/EJ\ = 1/4\ Fb^2/EJ$

$L^{Xo}_{AG} = \int_o^b (3/2\,x/b - 3/2\,x^2/b^2)\ Fb\ 1/EJ\ dx = [3/4\,x^2/b - 1/2\,x^3/b^2\,]_o^b\ Fb\ 1/EJ$

$= (3/4\,b - 1/2\,b\,)\ Fb\ 1/EJ\ = 1/4\ Fb^2/EJ$

$L^{Xo}_{HI} = \int_o^b (-5/2 + 4\,x/b - 3/2\,x^2/b^2)\ Fb\ 1/EJ\ dx = [-5/2\,x + 2\,x^2/b - 1/2\,x^3/b^2\,]_o^b\ Fb\ 1/EJ$

$= (-5/2\,b + 2\,b - 1/2\,b\,)\ Fb\ 1/EJ\ = -\ Fb^2/EJ$

$L^{Xo}_{IH} = \int_o^b (-\,x/b - 3/2\,x^2/b^2)\ Fb\ 1/EJ\ dx = [-1/2\,x^2/b - 1/2\,x^3/b^2\,]_o^b\ Fb\ 1/EJ$

$= (-1/2\,b - 1/2\,b\,)\ Fb\ 1/EJ\ = -\ Fb^2/EJ$

PROCEDIMENTO E RISULTATI Nome: ESΣ05.xxxx.210

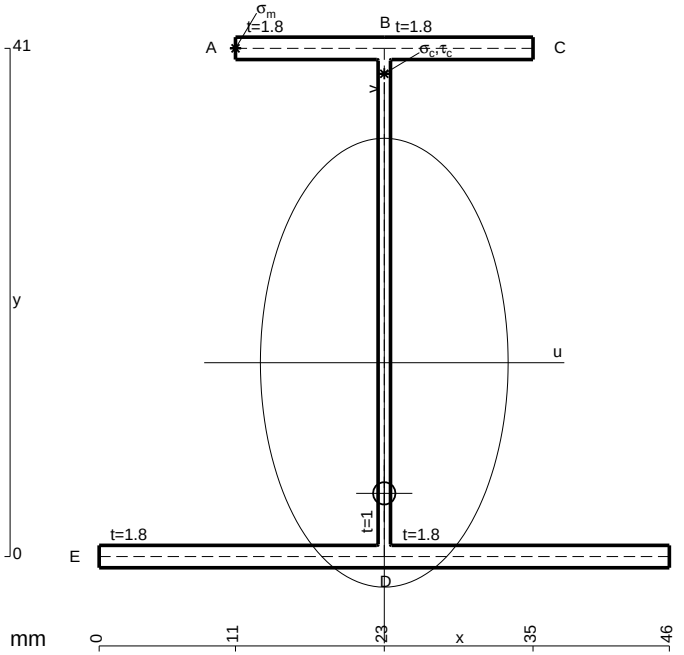

A = 167. mm^2
J_u = 54749. mm^4
J_v = 16674. mm^4
J_t = 149.7 mm^4
y_o = -10.54 mm
y_g = 15.64 mm
T_y = -1470. N
M_x = -428750. Nmm
x_m = 11. mm
y_m = 41. mm
u_m = -12. mm
v_m = 25.36 mm
$\sigma_m = -Mv/J_u$ = 198.6 N/mm^2
x_c = 23. mm
y_c = 41. mm
v_c = 25.36 mm
$\sigma_c = -Mv/J_u$ = 198.6 N/mm^2
$\tau_c = TS^*/tJ_u$ = 29.42 N/mm^2
$\tau_g = TS^*/tJ_u$ = 29.42 N/mm^2
t_c = 490. mm
$\sigma_o = \sqrt{\sigma^2 + 3\tau^2}$ = 205. N/mm^2

@ Adolfo Zavelani Rossi, Politecnico di Milano, vers.27.03.13 01.12.25

ESΣ05.xxxx.210

@ Adolfo Zavelani Rossi, Politecnico di Milano, vers.27.03.13 01.12.25

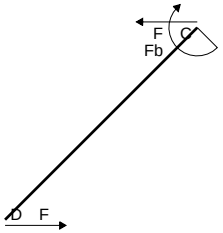
F
G
Fb
D
F

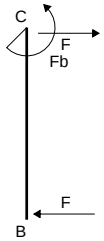
C
F
Fb
F
B

E
D

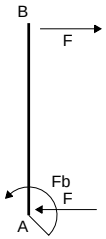
B
F
Fb
F
A

E
F

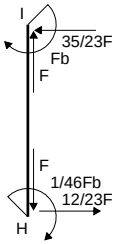
I
35/23F
Fb
F
F
1/46Fb
12/23F
H

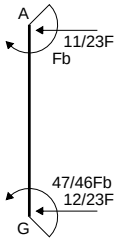
A
11/23F
Fb
47/46Fb
12/23F
G

F
H
Fb
F
F

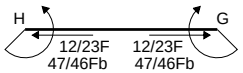
H
G
12/23F
47/46Fb
12/23F
47/46Fb

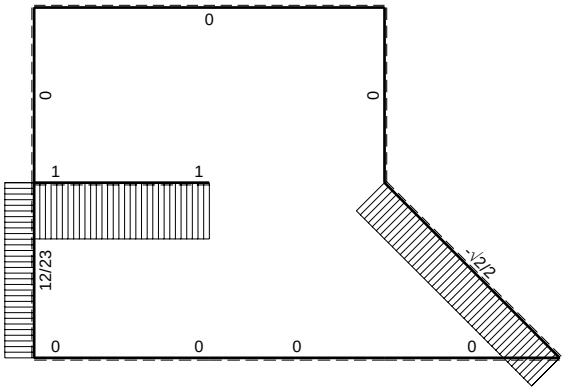
0
0
0
1
1
12/23
-√2/2
0
0
0
0

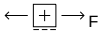
F

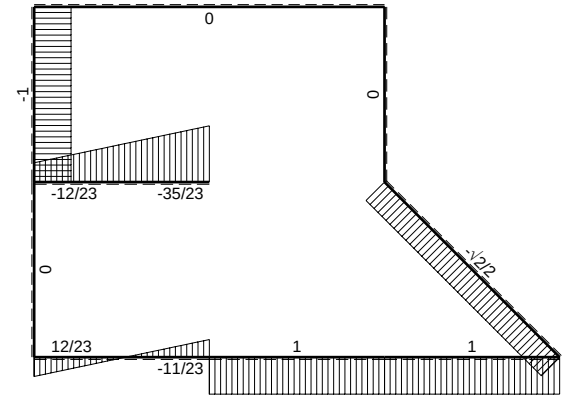
0
-1
0
-12/23
-35/23
-√2/2
0
12/23
1
1
-11/23

F

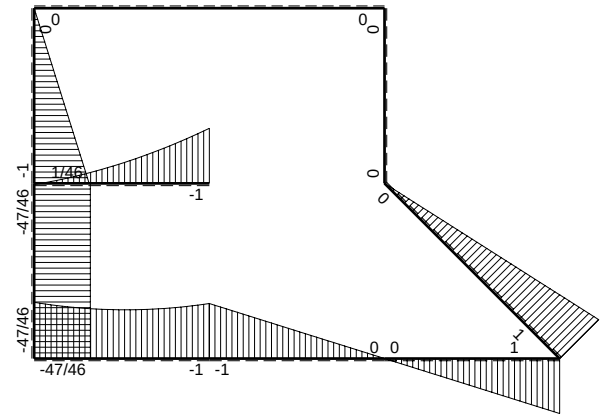
0
0
0
0
-1
1/46
-1
0
0
-47/46
-47/46
0
0
1
-47/46
-1
-1

Fb

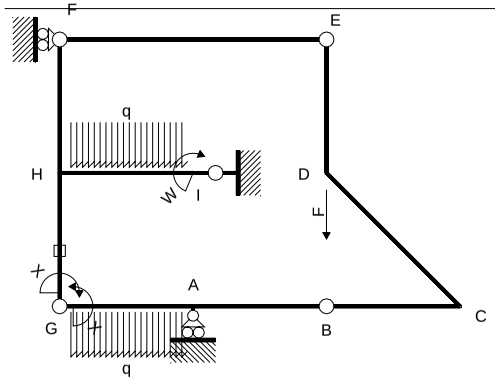

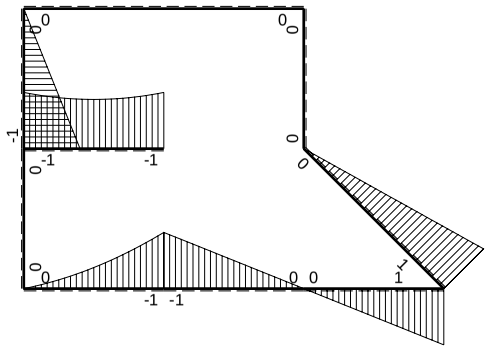

M_0 flessione da carichi assegnati

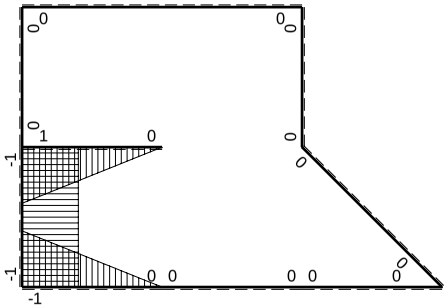

M_x flessione da iperstatica X=1

PROCEDIMENTO E RISULTATI Nome: ESΣ05.xxxx.211

@ Adolfo Zavelani Rossi, Politecnico di Milano, vers.27.03.13 01.12.25

Quadro contributi PLV per iperstatica $X=W_{GA}$

→	$M_x(x)$	$M_o(x)$	M_xM_o	M_xM_x	$\int M_xM_o/EJdx$	$\int XM_xM_x/EJdx$
AB b	0	-Fb+Fx	0	0	0	0
BA b	0	Fx	0	0		
BC b	0	Fx	0	0	0	0
CB b	0	-Fb+Fx	0	0		
CD √2b	0	Fb-√2/2Fx	0	0	0	0
DE b	0	0	0	0	0	0
ED b	0	0	0	0		
EF 2b	0	0	0	0	0	0
FE 2b	0	0	0	0		
GA b	-1+x/b	$-1/2Fx-1/2qx^2$	$1/2Fx-1/2qx^3/b$	$1-2x/b+x^2/b^2$	$1/8Fb^2/EJ$	1/3Xb/EJ
AG b	x/b	$Fb-3/2Fx+1/2qx^2$	$Fx-3/2Fx^2/b+1/2qx^3/b$	x^2/b^2		
FH b	0	-Fx	0	0	0	0
HF b	0	Fb-Fx	0	0		
HI b	1-x/b	$-Fb+1/2Fx-1/2qx^2$	$-Fb+3/2Fx-Fx^2/b+1/2qx^3/b$	$1-2x/b+x^2/b^2$	$-11/24Fb^2/EJ$	1/3Xb/EJ
IH b	-x/b	$Fb-1/2Fx+1/2qx^2$	$-Fx+1/2Fx^2/b-1/2qx^3/b$	x^2/b^2		
HG b	-1	0	0	1	0	Xb/EJ
GH b	1	0	0	1		
HG	elongazione asta $N_{1HG}\varepsilon_{HG}L_{HG}$				$-Fb^2/EJ$	
A	molla nodo $-V_{1A}(V_{0A}+XV_{1A})/k_A$				$-5/8Fb^2/EJ$	1/4Xb/EJ
	totali				$-47/24Fb^2/EJ$	23/12Xb/EJ
	iperstatica $X=W_{GA}$				47/46Fb	

PROCEDIMENTO E RISULTATI Nome: ESΣ05.xxxx.211

Sviluppi di calcolo iperstatica

@ Adolfo Zavelani Rossi, Politecnico di Milano, vers.27.03.13 01.12.25

$L^{XX}_{GA} = \int_o^b (1 - 2\,x/b + x^2/b^2)\ 1/EJ\ dx = [\,x - x^2/b + 1/3\,x^3/b^2\,]_o^b\ 1/EJ$

$= (\,b - b + 1/3\,b\,)\ 1/EJ\ = 1/3\ b/EJ$

$L^{XX}_{AG} = \int_o^b (\,x^2/b^2\,)\ 1/EJ\ dx = [1/3\,x^3/b^2\,]_o^b\ 1/EJ$

$= (1/3\,b\,)\ 1/EJ\ = 1/3\ b/EJ$

$L^{XX}_{HI} = \int_o^b (1 - 2\,x/b + x^2/b^2)\ 1/EJ\ dx = [\,x - x^2/b + 1/3\,x^3/b^2\,]_o^b\ 1/EJ$

$= (\,b - b + 1/3\,b\,)\ 1/EJ\ = 1/3\ b/EJ$

$L^{XX}_{IH} = \int_o^b (\,x^2/b^2\,)\ 1/EJ\ dx = [1/3\,x^3/b^2\,]_o^b\ 1/EJ$

$= (1/3\,b\,)\ 1/EJ\ = 1/3\ b/EJ$

$L^{XX}_{HG} = \int_o^b (1)\ 1/EJ\ dx = [\,x\,]_o^b\ 1/EJ$

$= (\,b\,)\ 1/EJ\ =\ b/EJ$

$L^{XX}_{GH} = \int_o^b (1)\ 1/EJ\ dx = [\,x\,]_o^b\ 1/EJ$

$= (\,b\,)\ 1/EJ\ =\ b/EJ$

$L^{Xo}_{GA} = \int_o^b (1/2\,x/b - 1/2\,x^3/b^3)\ Fb\ 1/EJ\ dx = [1/4\,x^2/b - 1/8\,x^4/b^3\,]_o^b\ Fb\ 1/EJ$

$= (1/4\,b - 1/8\,b\,)\ Fb\ 1/EJ\ = 1/8\ Fb^2/EJ$

$L^{Xo}_{AG} = \int_o^b (\,x/b - 3/2\,x^2/b^2 + 1/2\,x^3/b^3\,)\ Fb\ 1/EJ\ dx = [1/2\,x^2/b - 1/2\,x^3/b^2 + 1/8\,x^4/b^3\,]_o^b\ Fb\ 1/EJ$

$= (1/2\,b - 1/2\,b + 1/8\,b\,)\ Fb\ 1/EJ\ = 1/8\ Fb^2/EJ$

$L^{Xo}_{HI} = \int_o^b (-1 + 3/2\,x/b - x^2/b^2 + 1/2\,x^3/b^3\,)\ Fb\ 1/EJ\ dx = [-\,x + 3/4\,x^2/b - 1/3\,x^3/b^2 + 1/8\,x^4/b^3\,]_o^b\ Fb\ 1/EJ$

$= (-\,b + 3/4\,b - 1/3\,b + 1/8\,b\,)\ Fb\ 1/EJ\ = -11/24\ Fb^2/EJ$

$L^{Xo}_{IH} = \int_o^b (-\,x/b + 1/2\,x^2/b^2 - 1/2\,x^3/b^3\,)\ Fb\ 1/EJ\ dx = [-1/2\,x^2/b + 1/6\,x^3/b^2 - 1/8\,x^4/b^3\,]_o^b\ Fb\ 1/EJ$

$= (-1/2\,b + 1/6\,b - 1/8\,b\,)\ Fb\ 1/EJ\ = -11/24\ Fb^2/EJ$

PROCEDIMENTO E RISULTATI Nome: ESΣ05.xxxx.211

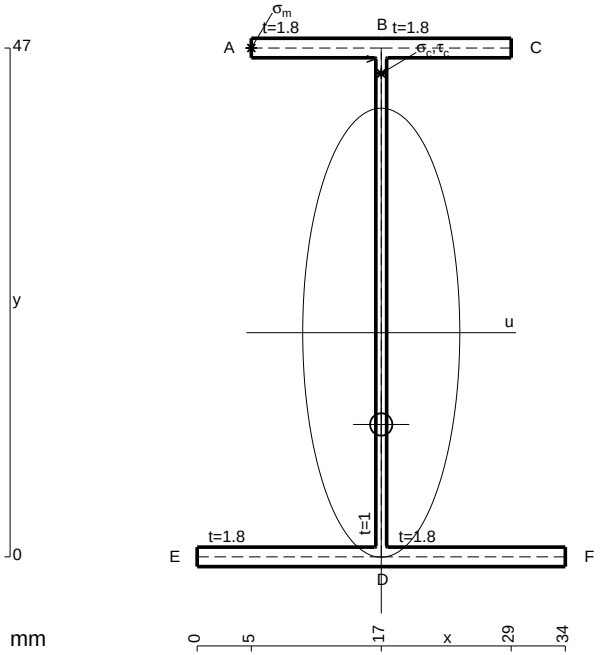

A = 151.4 mm^2
J_u = 65125. mm^4
J_v = 7969. mm^4
J_t = 128.4 mm^4
y_o = -8.477 mm
y_g = 20.71 mm
T_y = 1180. N
M_x = -519200. Nmm
x_m = 5. mm
y_m = 47. mm
u_m = -12. mm
v_m = 26.29 mm
$\sigma_m = -Mv/J_u$ = 209.6 N/mm^2
x_c = 17. mm
y_c = 47. mm
v_c = 26.29 mm
$\sigma_c = -Mv/J_u$ = 209.6 N/mm^2
$\tau_c = TS^*/tJ_u$ = 20.58 N/mm^2
$\tau_g = TS^*/tJ_u$ = 20.58 N/mm^2
t_c = 1180. mm
$\sigma_o = \sqrt{\sigma^2 + 3\tau^2}$ = 212.6 N/mm^2

@ Adolfo Zavelani Rossi, Politecnico di Milano, vers.27.03.13 01.12.25

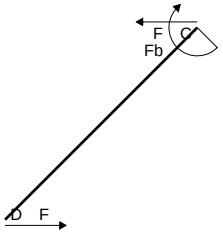
F
G
Fb
D
F

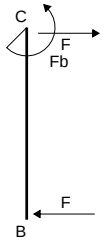
C
F
Fb
F
B

E
D

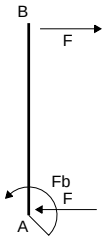
B
F
Fb
F
A

E
F

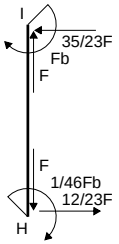
I
35/23F
Fb
F
F
1/46Fb
12/23F
H

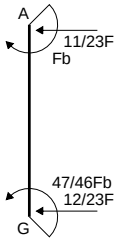
A
11/23F
Fb
47/46Fb
12/23F
G

F
H
Fb
F
F

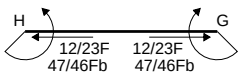
H
G
12/23F
47/46Fb
12/23F
47/46Fb

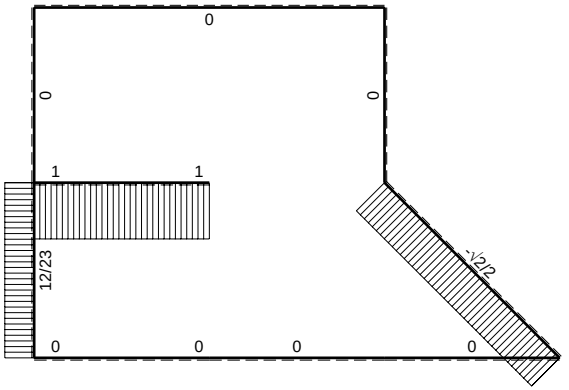
0
0
0
1
1
12/23
-√2/2
0
0
0
0

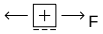
F

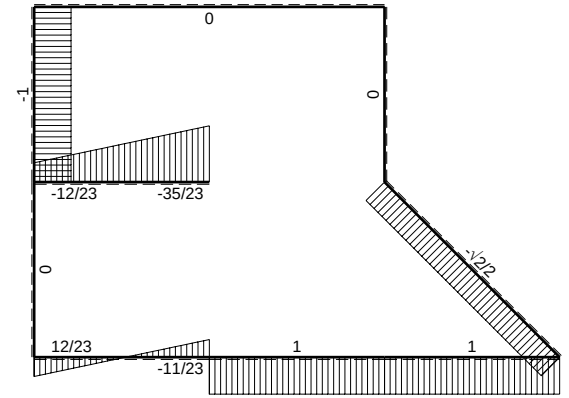
0
-1
0
-12/23
-35/23
-√2/2
0
12/23
1
1
-11/23

F

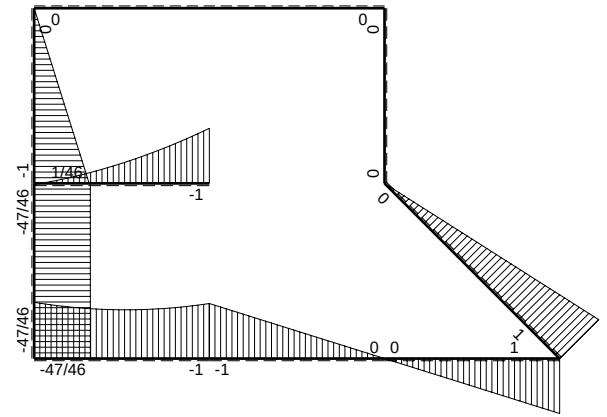
0
0
0
0
-1
1/46
-1
0
0
-47/46
-47/46
0 0
1
-47/46
-1 -1

Fb

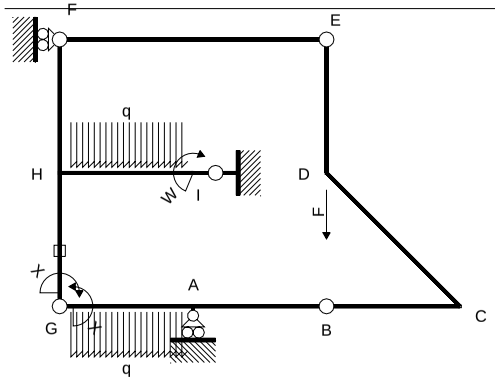

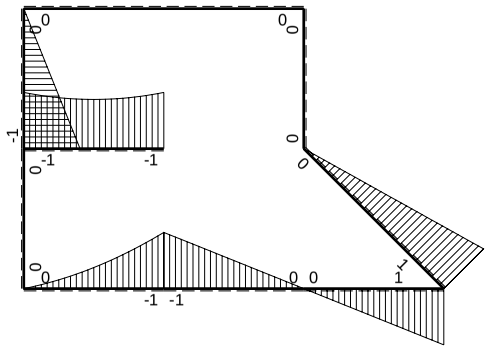

M_0 flessione da carichi assegnati

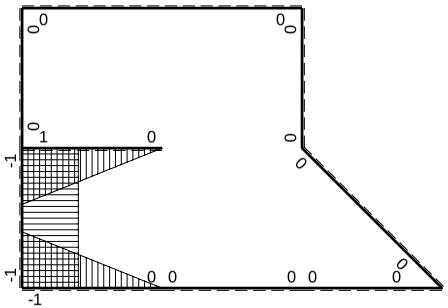

M_x flessione da iperstatica X=1

PROCEDIMENTO E RISULTATI Nome: ESΣ05.xxxx.212

@ Adolfo Zavelani Rossi, Politecnico di Milano, vers.27.03.13 01.12.25

Quadro contributi PLV per iperstatica $X=W_{GA}$

→	$M_x(x)$	$M_o(x)$	M_xM_o	M_xM_x	$\int M_xM_o/EJdx$	$\int XM_xM_x/EJdx$
AB b	0	-Fb+Fx	0	0	0	0
BA b	0	Fx	0	0		
BC b	0	Fx	0	0	0	0
CB b	0	-Fb+Fx	0	0		
CD √2b	0	Fb-√2/2Fx	0	0	0	0
DE b	0	0	0	0	0	0
ED b	0	0	0	0		
EF 2b	0	0	0	0	0	0
FE 2b	0	0	0	0		
GA b	-1+x/b	$-1/2Fx-1/2qx^2$	$1/2Fx-1/2qx^3/b$	$1-2x/b+x^2/b^2$	$1/8Fb^2/EJ$	1/3Xb/EJ
AG b	x/b	$Fb-3/2Fx+1/2qx^2$	$Fx-3/2Fx^2/b+1/2qx^3/b$	x^2/b^2		
FH b	0	-Fx	0	0	0	0
HF b	0	Fb-Fx	0	0		
HI b	1-x/b	$-Fb+1/2Fx-1/2qx^2$	$-Fb+3/2Fx-Fx^2/b+1/2qx^3/b$	$1-2x/b+x^2/b^2$	$-11/24Fb^2/EJ$	1/3Xb/EJ
IH b	-x/b	$Fb-1/2Fx+1/2qx^2$	$-Fx+1/2Fx^2/b-1/2qx^3/b$	x^2/b^2		
HG b	-1	0	0	1	0	Xb/EJ
GH b	1	0	0	1		
HG	elongazione asta $N_{1HG}\varepsilon_{HG}L_{HG}$				$-Fb^2/EJ$	
A	molla nodo $-V_{1A}(V_{oA}+XV_{1A})/k_A$				$-5/8Fb^2/EJ$	1/4Xb/EJ
	totali				$-47/24Fb^2/EJ$	23/12Xb/EJ
	iperstatica $X=W_{GA}$				47/46Fb	

PROCEDIMENTO E RISULTATI Nome: ESΣ05.xxxx.212

Sviluppi di calcolo iperstatica

@ Adolfo Zavelani Rossi, Politecnico di Milano, vers.27.03.13 01.12.25

$L^{XX}_{GA} = \int_o^b (1 - 2\,x/b + x^2/b^2)\ 1/EJ\ dx = [\,x - x^2/b + 1/3\,x^3/b^2\,]_o^b\ 1/EJ$

$= (\,b - b + 1/3\,b\,)\ 1/EJ = 1/3\ b/EJ$

$L^{XX}_{AG} = \int_o^b (\,x^2/b^2\,)\ 1/EJ\ dx = [1/3\,x^3/b^2\,]_o^b\ 1/EJ$

$= (1/3\,b\,)\ 1/EJ = 1/3\ b/EJ$

$L^{XX}_{HI} = \int_o^b (1 - 2\,x/b + x^2/b^2)\ 1/EJ\ dx = [\,x - x^2/b + 1/3\,x^3/b^2\,]_o^b\ 1/EJ$

$= (\,b - b + 1/3\,b\,)\ 1/EJ = 1/3\ b/EJ$

$L^{XX}_{IH} = \int_o^b (\,x^2/b^2\,)\ 1/EJ\ dx = [1/3\,x^3/b^2\,]_o^b\ 1/EJ$

$= (1/3\,b\,)\ 1/EJ = 1/3\ b/EJ$

$L^{XX}_{HG} = \int_o^b (1)\ 1/EJ\ dx = [\,x\,]_o^b\ 1/EJ$

$= (\,b\,)\ 1/EJ = b/EJ$

$L^{XX}_{GH} = \int_o^b (1)\ 1/EJ\ dx = [\,x\,]_o^b\ 1/EJ$

$= (\,b\,)\ 1/EJ = b/EJ$

$L^{Xo}_{GA} = \int_o^b (1/2\,x/b - 1/2\,x^3/b^3)\ Fb\ 1/EJ\ dx = [1/4\,x^2/b - 1/8\,x^4/b^3\,]_o^b\ Fb\ 1/EJ$

$= (1/4\,b - 1/8\,b\,)\ Fb\ 1/EJ = 1/8\ Fb^2/EJ$

$L^{Xo}_{AG} = \int_o^b (\,x/b - 3/2\,x^2/b^2 + 1/2\,x^3/b^3\,)\ Fb\ 1/EJ\ dx = [1/2\,x^2/b - 1/2\,x^3/b^2 + 1/8\,x^4/b^3\,]_o^b\ Fb\ 1/EJ$

$= (1/2\,b - 1/2\,b + 1/8\,b\,)\ Fb\ 1/EJ = 1/8\ Fb^2/EJ$

$L^{Xo}_{HI} = \int_o^b (-1 + 3/2\,x/b - x^2/b^2 + 1/2\,x^3/b^3\,)\ Fb\ 1/EJ\ dx = [-x + 3/4\,x^2/b - 1/3\,x^3/b^2 + 1/8\,x^4/b^3\,]_o^b\ Fb\ 1/EJ$

$= (-\,b + 3/4\,b - 1/3\,b + 1/8\,b\,)\ Fb\ 1/EJ = -11/24\ Fb^2/EJ$

$L^{Xo}_{IH} = \int_o^b (-\,x/b + 1/2\,x^2/b^2 - 1/2\,x^3/b^3\,)\ Fb\ 1/EJ\ dx = [-1/2\,x^2/b + 1/6\,x^3/b^2 - 1/8\,x^4/b^3\,]_o^b\ Fb\ 1/EJ$

$= (-1/2\,b + 1/6\,b - 1/8\,b\,)\ Fb\ 1/EJ = -11/24\ Fb^2/EJ$

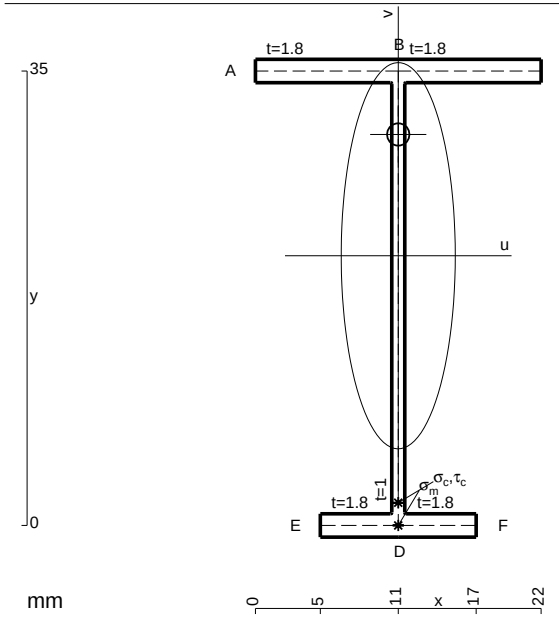

A = 96.2 mm^2
J_u = 21284. mm^4
J_v = 1856. mm^4
J_t = 77.76 mm^4
y_o = 9.339 mm
y_g = 20.77 mm
T_y = 620. N
M_x = -223200. Nmm
x_m = 11. mm
v_m = -20.77 mm
$\sigma_m = -Mv/J_u$ = -217.9 N/mm^2
y_c = 3. mm
u_c = -11. mm
v_c = -17.77 mm
$\sigma_c = -Mv/J_u$ = -217.9 N/mm^2
$\tau_c = TS^*/tJ_u$ = 13.07 N/mm^2
$\tau_g = TS^*/tJ_u$ = 13.07 N/mm^2
t_c = 620. mm
$\sigma_o = \sqrt{\sigma^2 + 3\tau^2}$ = 219. N/mm^2

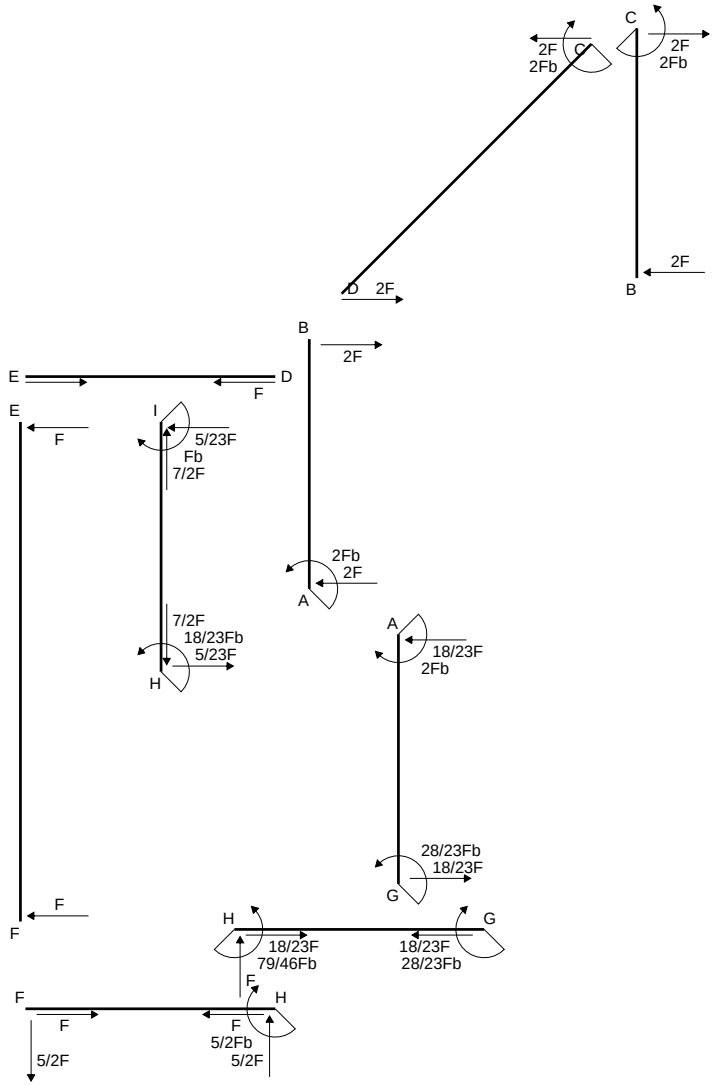
C
2F
2Fb
C
2F
2Fb
2F
D
2F
B
B
2F
E
D
F
E
F
I
5/23F
Fb
7/2F
2Fb
2F
A
7/2F
18/23Fb
5/23F
H
A
18/23F
2Fb
28/23Fb
18/23F
G
F
F
H
G
18/23F
79/46Fb
18/23F
28/23Fb
F
F
H
F
F
5/2Fb
5/2F
5/2F

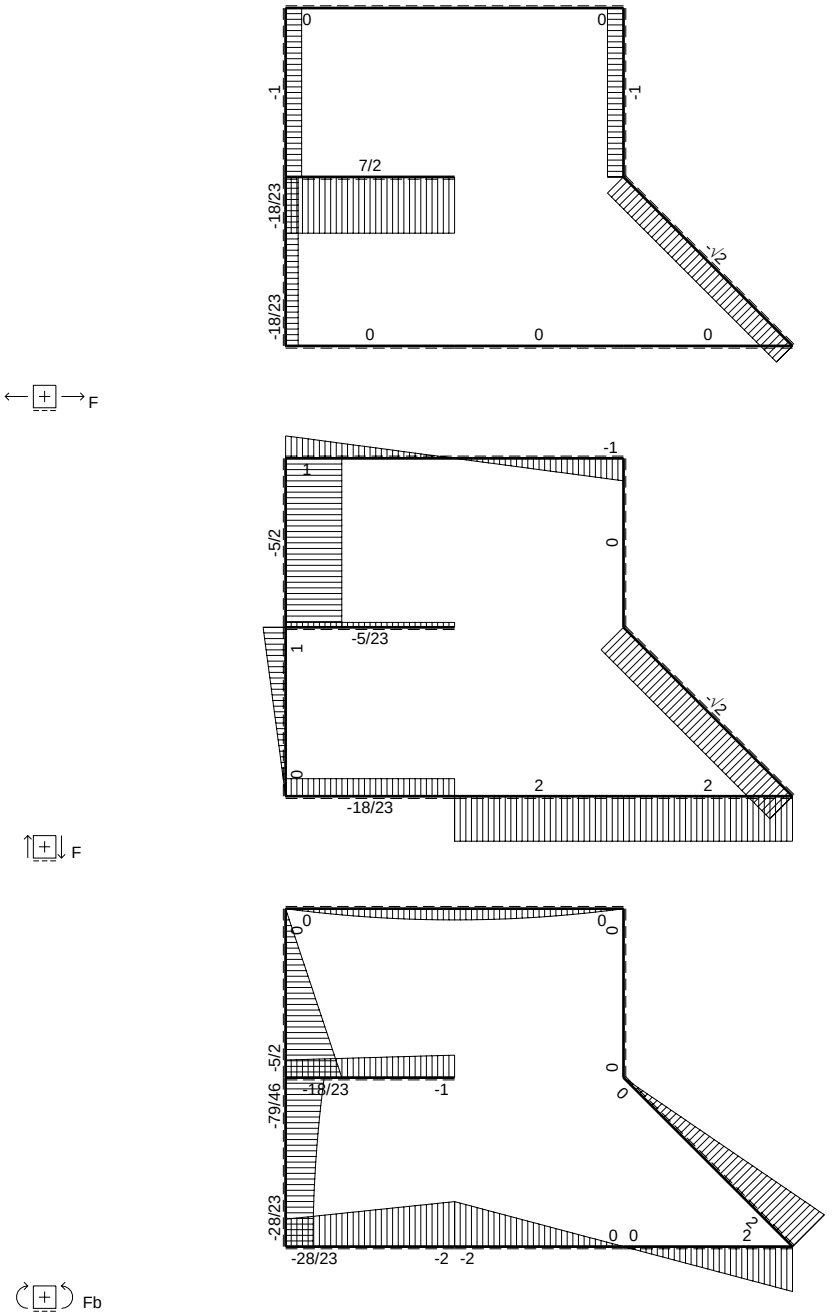
F
0
0
-1
-1
7/2
-18/23
-18/23
-½
0
0
0
F
-1
1
-5/2
0
-5/23
1
-½
0
2
2
-18/23
F
0
0
0
0
-5/2
-18/23
-1
-79/46
0
0
-28/23
0 0
2
-28/23
-2 -2
Fb

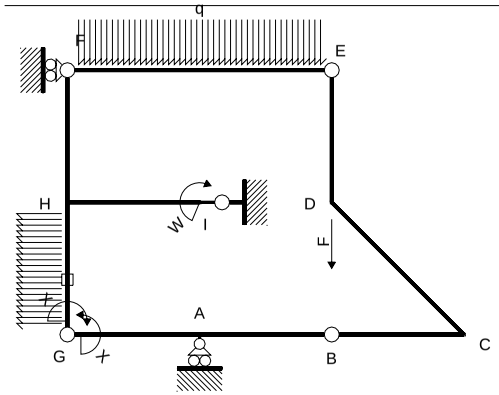

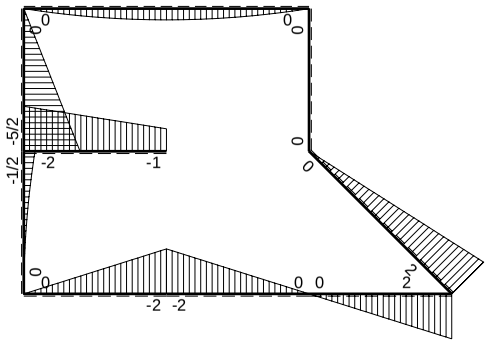

M_0 flessione da carichi assegnati

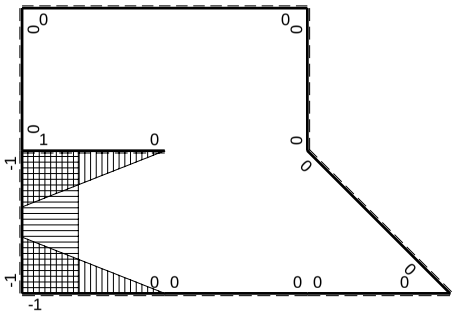

M_x flessione da iperstatica X=1

Quadro contributi PLV per iperstatica $X=W_{GA}$

→	$M_x(x)$	$M_o(x)$	M_xM_o	M_xM_x	$\int M_xM_o/EJdx$	$\int XM_xM_x/EJdx$
AB b	0	-2Fb+2Fx	0	0	0	0
BA b	0	2Fx	0	0		
BC b	0	2Fx	0	0	0	0
CB b	0	-2Fb+2Fx	0	0		
CD √2b	0	2Fb-√2Fx	0	0	0	0
DE b	0	0	0	0	0	0
ED b	0	0	0	0		
EF 2b	0	$-Fx+1/2qx^2$	0	0	0	0
FE 2b	0	$Fx-1/2qx^2$	0	0		
GA b	-1+x/b	-2Fx	$2Fx-2Fx^2/b$	$1-2x/b+x^2/b^2$	$1/3Fb^2/EJ$	1/3Xb/EJ
AG b	x/b	2Fb-2Fx	$2Fx-2Fx^2/b$	x^2/b^2		
FH b	0	-5/2Fx	0	0	0	0
HF b	0	5/2Fb-5/2Fx	0	0		
HI b	1-x/b	-2Fb+Fx	$-2Fb+3Fx-Fx^2/b$	$1-2x/b+x^2/b^2$	$-5/6Fb^2/EJ$	1/3Xb/EJ
IH b	-x/b	Fb+Fx	$-Fx-Fx^2/b$	x^2/b^2		
HG b	-1	$-1/2Fb+Fx-1/2qx^2$	$1/2Fb-Fx+1/2Fx^2/b$	1	$1/6Fb^2/EJ$	Xb/EJ
GH b	1	$1/2qx^2$	$1/2Fx^2/b$	1		
HG	elongazione asta $N_{1HG}\varepsilon_{HG}L_{HG}$				$-Fb^2/EJ$	
A	molla nodo $-V_{1A}(V_{0A}+XV_{1A})/k_A$				$-Fb^2/EJ$	1/4Xb/EJ
	totali				$-7/3Fb^2/EJ$	23/12Xb/EJ
	iperstatica $X=W_{GA}$				28/23Fb	

Sviluppi di calcolo iperstatica

$L^{XX}_{GA} = \int_o^b (1 - 2\,x/b + x^2/b^2)\ 1/EJ\ dx = [\ x - x^2/b + 1/3\ x^3/b^2\ ]_o^b\ 1/EJ$

$= (\ b - b + 1/3\ b\ )\ 1/EJ\ = 1/3\ b/EJ$

$L^{XX}_{AG} = \int_o^b (\ x^2/b^2\ )\ 1/EJ\ dx = [1/3\ x^3/b^2\ ]_o^b\ 1/EJ$

$= (1/3\ b\ )\ 1/EJ\ = 1/3\ b/EJ$

$L^{XX}_{HI} = \int_o^b (1 - 2\,x/b + x^2/b^2)\ 1/EJ\ dx = [\ x - x^2/b + 1/3\ x^3/b^2\ ]_o^b\ 1/EJ$

$= (\ b - b + 1/3\ b\ )\ 1/EJ\ = 1/3\ b/EJ$

$L^{XX}_{IH} = \int_o^b (\ x^2/b^2\ )\ 1/EJ\ dx = [1/3\ x^3/b^2\ ]_o^b\ 1/EJ$

$= (1/3\ b\ )\ 1/EJ\ = 1/3\ b/EJ$

$L^{XX}_{HG} = \int_o^b (1)\ 1/EJ\ dx = [\ x\ ]_o^b\ 1/EJ$

$= (\ b\ )\ 1/EJ\ =\ b/EJ$

$L^{XX}_{GH} = \int_o^b (1)\ 1/EJ\ dx = [\ x\ ]_o^b\ 1/EJ$

$= (\ b\ )\ 1/EJ\ =\ b/EJ$

$L^{Xo}_{GA} = \int_o^b (2\,x/b - 2\,x^2/b^2)\ Fb\ 1/EJ\ dx = [\ x^2/b - 2/3\ x^3/b^2\ ]_o^b\ Fb\ 1/EJ$

$= (\ b - 2/3\ b\ )\ Fb\ 1/EJ\ = 1/3\ Fb^2/EJ$

$L^{Xo}_{AG} = \int_o^b (2\,x/b - 2\,x^2/b^2)\ Fb\ 1/EJ\ dx = [\ x^2/b - 2/3\ x^3/b^2\ ]_o^b\ Fb\ 1/EJ$

$= (\ b - 2/3\ b\ )\ Fb\ 1/EJ\ = 1/3\ Fb^2/EJ$

$L^{Xo}_{HI} = \int_o^b (-2 + 3\,x/b - x^2/b^2)\ Fb\ 1/EJ\ dx = [-2\,x + 3/2\ x^2/b - 1/3\ x^3/b^2\ ]_o^b\ Fb\ 1/EJ$

$= (-2\ b + 3/2\ b - 1/3\ b\ )\ Fb\ 1/EJ\ = -5/6\ Fb^2/EJ$

$L^{Xo}_{IH} = \int_o^b (-\,x/b - x^2/b^2)\ Fb\ 1/EJ\ dx = [-1/2\ x^2/b - 1/3\ x^3/b^2\ ]_o^b\ Fb\ 1/EJ$

$= (-1/2\ b - 1/3\ b\ )\ Fb\ 1/EJ\ = -5/6\ Fb^2/EJ$

$L^{Xo}_{HG} = \int_o^b (1/2 - x/b + 1/2\ x^2/b^2)\ Fb\ 1/EJ\ dx - 1\ \ (-1)\ \ (-1)\ \ Fb^2/EJ$

$= [1/2\ x - 1/2\ x^2/b + 1/6\ x^3/b^2\ ]_o^b\ Fb\ 1/EJ\ -\ 1\ \ (-1)\ \ (-1)\ \ Fb^2/EJ$

$= (1/2\ b - 1/2\ b + 1/6\ b\ )\ Fb\ 1/EJ\ -\ 1\ \ (-1)\ \ (-1)\ \ Fb^2/EJ = -5/6\ \ Fb^2/EJ$

$L^{Xo}_{GH} = \int_o^b (1/2\ x^2/b^2\ )\ Fb\ 1/EJ\ dx - 1\ \ (-1)\ \ (-1)\ \ Fb^2/EJ = [1/6\ x^3/b^2\ ]_o^b\ Fb\ 1/EJ\ -\ 1\ \ (-1)\ \ (-1)\ \ Fb^2/EJ$

$= (1/6\ b\ )\ Fb\ 1/EJ\ -\ 1\ \ (-1)\ \ (-1)\ \ Fb^2/EJ = -5/6\ \ Fb^2/EJ$

PROCEDIMENTO E RISULTATI Nome: ESΣ05.xxxx.213

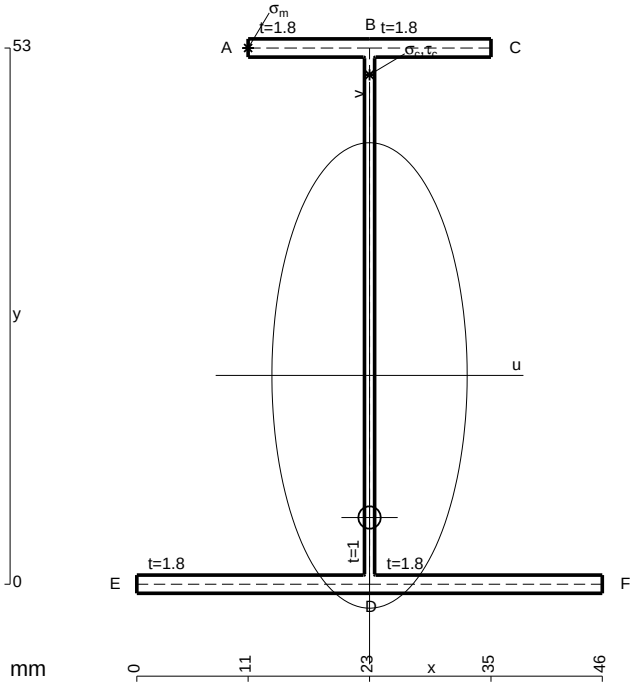

A = 179. mm^2
J_u = 94738. mm^4
J_v = 16674. mm^4
J_t = 153.7 mm^4
y_o = -14.05 mm
y_g = 20.64 mm
N = -460. N
T_y = -1150. N
M_x = -667000. Nmm
x_m = 11. mm
y_m = 53. mm
u_m = -12. mm
v_m = 32.36 mm
$\sigma_m = N/A - Mv/J_u$ = 225.3 N/mm^2
x_c = 23. mm
y_c = 53. mm
v_c = 32.36 mm
$\sigma_c = N/A - Mv/J_u$ = 225.3 N/mm^2
$\tau_c = TS^*/tJ_u$ = 16.97 N/mm^2
$\tau_g = TS^*/tJ_u$ = 16.97 N/mm^2
t_c = 460. mm
$\sigma_o = \sqrt{\sigma^2 + 3\tau^2}$ = 227.2 N/mm^2

@ Adolfo Zavelani Rossi, Politecnico di Milano, vers.27.03.13 01.12.25

ESΣ05.xxxx.213

@ Adolfo Zavelani Rossi, Politecnico di Milano, vers.27.03.13 01.12.25

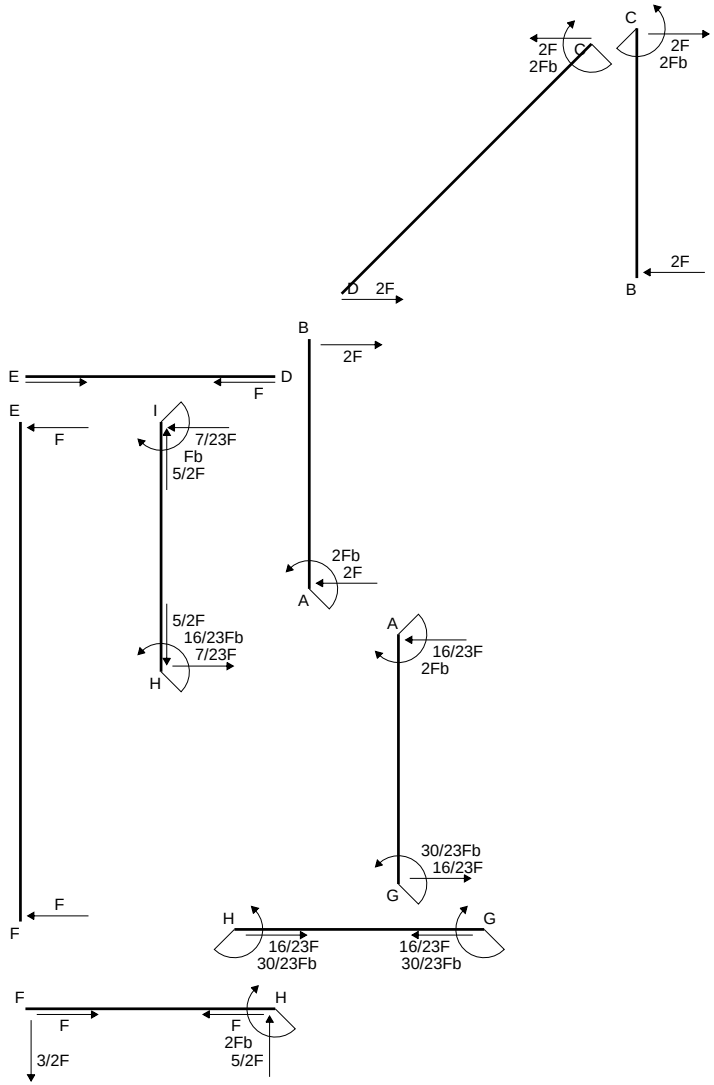
C
2F
2Fb
C
2F
2Fb
D
2F
2F
B
B
2F
E
D
F
E
F
I
7/23F
Fb
5/2F
2Fb
2F
A
5/2F
16/23Fb
7/23F
H
A
16/23F
2Fb
30/23Fb
16/23F
G
F
F
H
G
16/23F
30/23Fb
16/23F
30/23Fb
F
H
F
F
2Fb
5/2F
3/2F

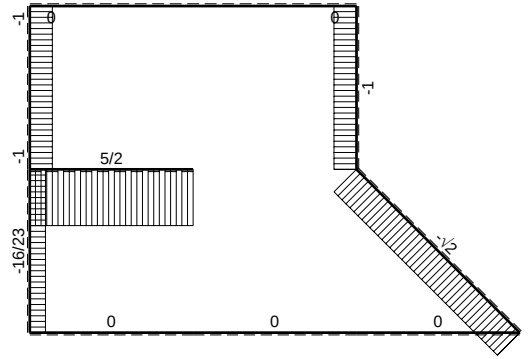
-1
0
0
-1
-1
5/2
-16/23
-√2
0
0
0

F

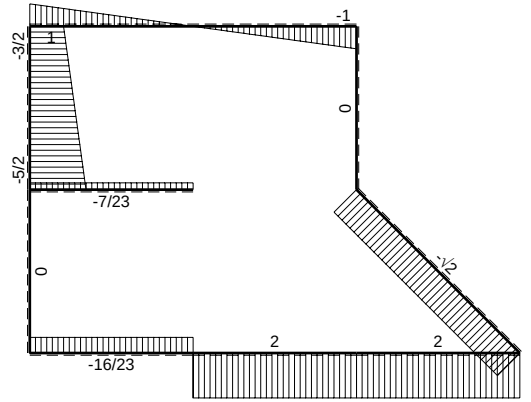
-1
-3/2
1
0
-5/2
-7/23
0
-√2
2
2
-16/23

F

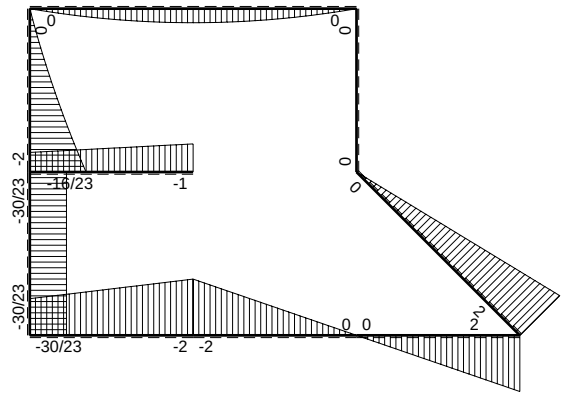
0
0
0
0
-2
-16/23
-1
0
0
-30/23
-30/23
0 0
2
-30/23
-2 -2

Fb

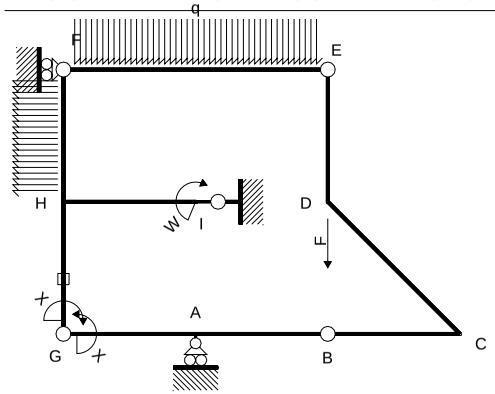

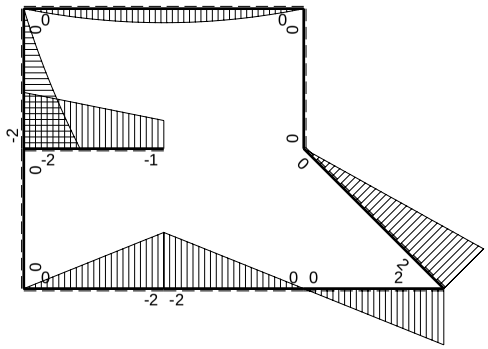

M_0 flessione da carichi assegnati

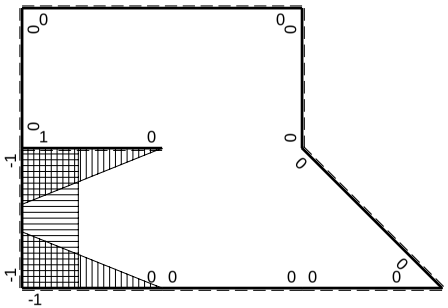

M_x flessione da iperstatica X=1

Quadro contributi PLV per iperstatica $X=W_{GA}$

→	$M_x(x)$	$M_0(x)$	M_xM_0	M_xM_x	$\int M_xM_0/EJdx$	$\int XM_xM_x/EJdx$
AB b	0	-2Fb+2Fx	0	0	0	0
BA b	0	2Fx	0	0		
BC b	0	2Fx	0	0	0	0
CB b	0	-2Fb+2Fx	0	0		
CD √2b	0	2Fb-√2Fx	0	0	0	0
DE b	0	0	0	0	0	0
ED b	0	0	0	0		
EF 2b	0	$-Fx+1/2qx^2$	0	0	0	0
FE 2b	0	$Fx-1/2qx^2$	0	0		
GA b	-1+x/b	-2Fx	$2Fx-2Fx^2/b$	$1-2x/b+x^2/b^2$	$1/3Fb^2/EJ$	1/3Xb/EJ
AG b	x/b	2Fb-2Fx	$2Fx-2Fx^2/b$	x^2/b^2		
FH b	0	$-3/2Fx-1/2qx^2$	0	0	0	0
HF b	0	$2Fb-5/2Fx+1/2qx^2$	0	0		
HI b	1-x/b	-2Fb+Fx	$-2Fb+3Fx-Fx^2/b$	$1-2x/b+x^2/b^2$	$-5/6Fb^2/EJ$	1/3Xb/EJ
IH b	-x/b	Fb+Fx	$-Fx-Fx^2/b$	x^2/b^2		
HG b	-1	0	0	1	0	Xb/EJ
GH b	1	0	0	1		
HG	elongazione asta $N_{1HG}\varepsilon_{HG}L_{HG}$				$-Fb^2/EJ$	
A	molla nodo $-V_{1A}(V_{0A}+XV_{1A})/k_A$				$-Fb^2/EJ$	1/4Xb/EJ
	totali				$-5/2Fb^2/EJ$	23/12Xb/EJ
	iperstatica $X=W_{GA}$				30/23Fb	

Sviluppi di calcolo iperstatica

$L^{XX}_{GA} = \int_o^b (1 - 2\,x/b + x^2/b^2)\ 1/EJ\ dx = [\ x - x^2/b + 1/3\ x^3/b^2\ ]_o^b\ 1/EJ$

$= (\ b - b + 1/3\ b\ )\ 1/EJ\ = 1/3\ b/EJ$

$L^{XX}_{AG} = \int_o^b (\ x^2/b^2\ )\ 1/EJ\ dx = [1/3\ x^3/b^2\ ]_o^b\ 1/EJ$

$= (1/3\ b\ )\ 1/EJ\ = 1/3\ b/EJ$

$L^{XX}_{HI} = \int_o^b (1 - 2\,x/b + x^2/b^2)\ 1/EJ\ dx = [\ x - x^2/b + 1/3\ x^3/b^2\ ]_o^b\ 1/EJ$

$= (\ b - b + 1/3\ b\ )\ 1/EJ\ = 1/3\ b/EJ$

$L^{XX}_{IH} = \int_o^b (\ x^2/b^2\ )\ 1/EJ\ dx = [1/3\ x^3/b^2\ ]_o^b\ 1/EJ$

$= (1/3\ b\ )\ 1/EJ\ = 1/3\ b/EJ$

$L^{XX}_{HG} = \int_o^b (1\ )\ 1/EJ\ dx = [\ x\ ]_o^b\ 1/EJ$

$= (\ b\ )\ 1/EJ\ =\ b/EJ$

$L^{XX}_{GH} = \int_o^b (1\ )\ 1/EJ\ dx = [\ x\ ]_o^b\ 1/EJ$

$= (\ b\ )\ 1/EJ\ =\ b/EJ$

$L^{Xo}_{GA} = \int_o^b (2\,x/b - 2\,x^2/b^2\ )\ Fb\ 1/EJ\ dx = [\ x^2/b - 2/3\ x^3/b^2\ ]_o^b\ Fb\ 1/EJ$

$= (\ b - 2/3\ b\ )\ Fb\ 1/EJ\ = 1/3\ \ Fb^2/EJ$

$L^{Xo}_{AG} = \int_o^b (2\,x/b - 2\,x^2/b^2\ )\ Fb\ 1/EJ\ dx = [\ x^2/b - 2/3\ x^3/b^2\ ]_o^b\ Fb\ 1/EJ$

$= (\ b - 2/3\ b\ )\ Fb\ 1/EJ\ = 1/3\ \ Fb^2/EJ$

$L^{Xo}_{HI} = \int_o^b (-2 + 3\,x/b - x^2/b^2\ )\ Fb\ 1/EJ\ dx = [-2\,x + 3/2\ x^2/b - 1/3\ x^3/b^2\ ]_o^b\ Fb\ 1/EJ$

$= (-2\ b + 3/2\ b - 1/3\ b\ )\ Fb\ 1/EJ\ = -5/6\ \ Fb^2/EJ$

$L^{Xo}_{IH} = \int_o^b (-\ x/b - x^2/b^2\ )\ Fb\ 1/EJ\ dx = [-1/2\ x^2/b - 1/3\ x^3/b^2\ ]_o^b\ Fb\ 1/EJ$

$= (-1/2\ b - 1/3\ b\ )\ Fb\ 1/EJ\ = -5/6\ \ Fb^2/EJ$

PROCEDIMENTO E RISULTATI Nome: ESΣ05.xxxx.214

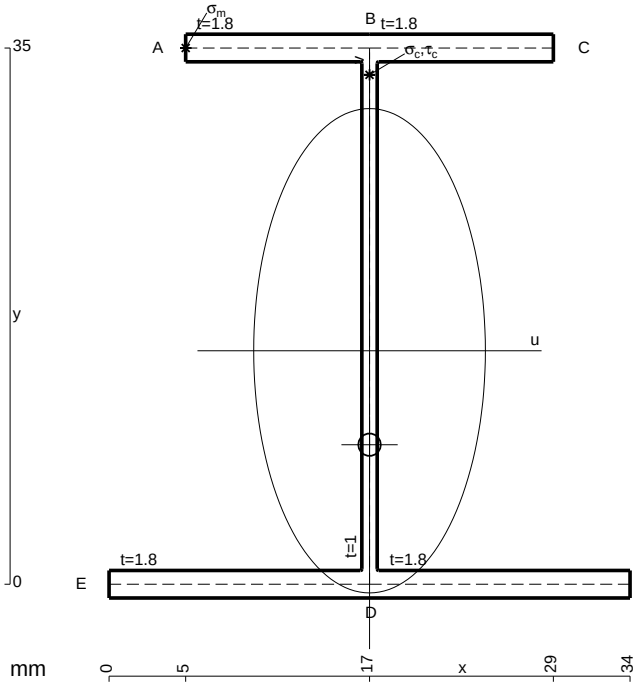

A = 139.4 mm^2
J_u = 34834. mm^4
J_v = 7969. mm^4
J_t = 124.4 mm^4
y_o = -6.133 mm
y_g = 15.24 mm
N = -510. N
T_y = -1275. N
M_x = -428400. Nmm
x_m = 5. mm
y_m = 35. mm
u_m = -12. mm
v_m = 19.76 mm
$\sigma_m = N/A - Mv/J_u$ = 239.4 N/mm^2
x_c = 17. mm
y_c = 35. mm
v_c = 19.76 mm
$\sigma_c = N/A - Mv/J_u$ = 239.4 N/mm^2
$\tau_c = TS^*/tJ_u$ = 31.24 N/mm^2
$\tau_g = TS^*/tJ_u$ = 31.24 N/mm^2
t_c = 510. mm
$\sigma_o = \sqrt{\sigma^2 + 3\tau^2}$ = 245.4 N/mm^2

@ Adolfo Zavelani Rossi, Politecnico di Milano, vers.27.03.13 01.12.25

ESΣ05.xxxx.214

@ Adolfo Zavelani Rossi, Politecnico di Milano, vers.27.03.13 01.12.25

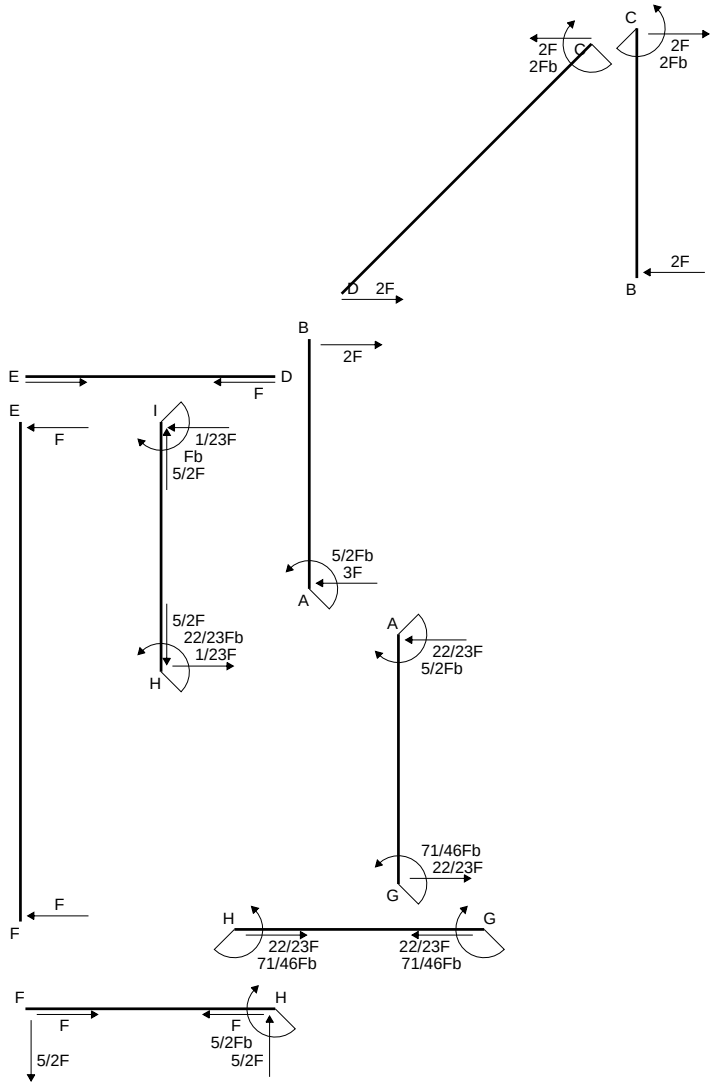
C
2F
2Fb
C
2F
2Fb
D
2F
2F
B
B
2F
E
D
F
E
F
I
1/23F
Fb
5/2F
5/2Fb
3F
A
5/2F
22/23Fb
1/23F
H
A
22/23F
5/2Fb
71/46Fb
22/23F
G
F
F
H
G
22/23F
71/46Fb
22/23F
71/46Fb
F
H
F
F
5/2Fb
5/2F
5/2F

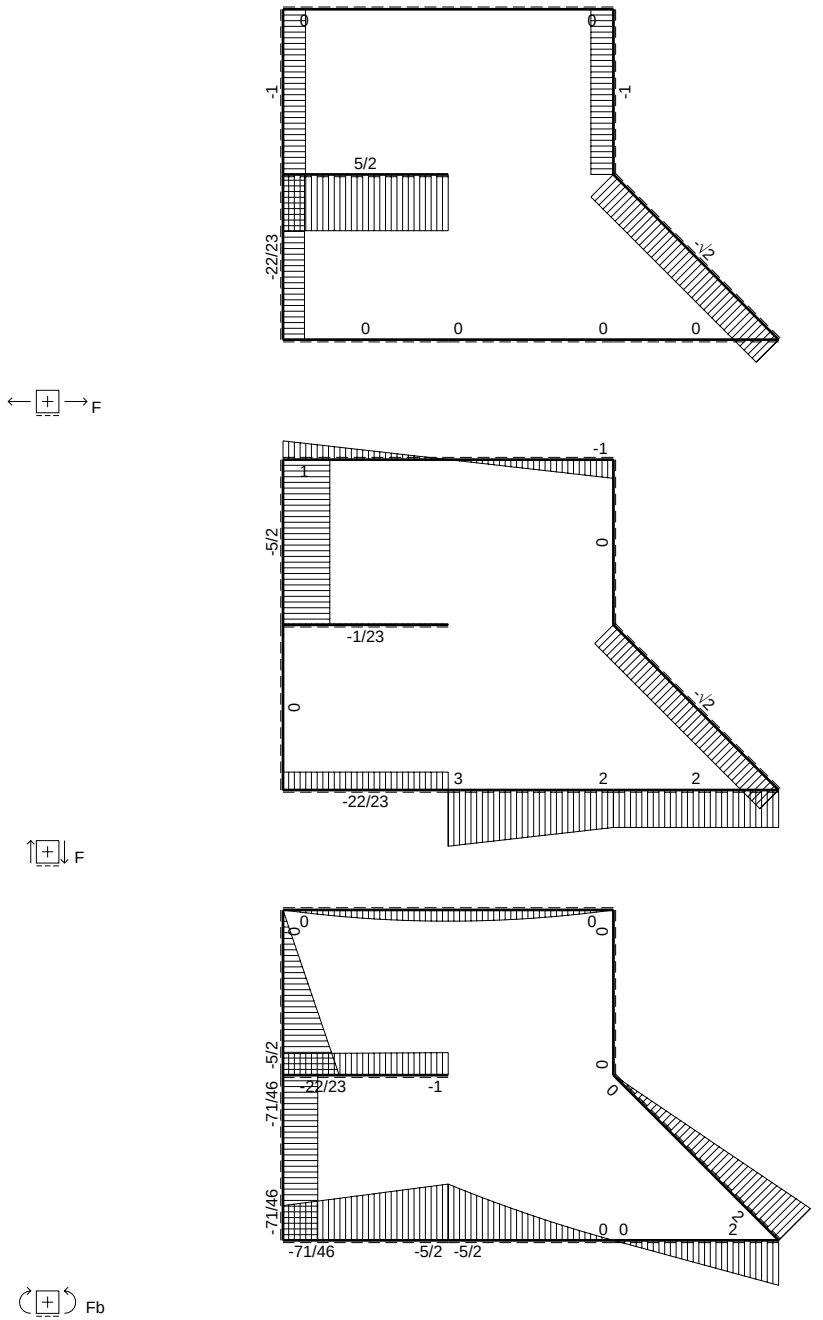
0
0
-1
-1
5/2
-22/23
-½
0
0
0
0
F
-1
1
-5/2
0
-1/23
0
-½
3
2
2
-22/23
F
0
0
0
0
-5/2
-22/23
-1
-71/46
0
0
-71/46
0 0
2
-71/46
-5/2 -5/2
Fb

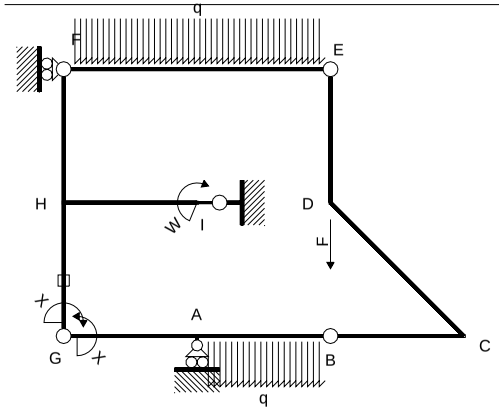

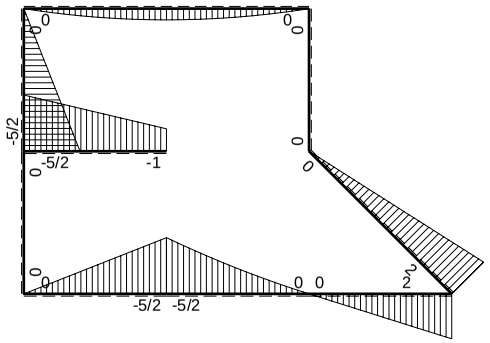

M_0 flessione da carichi assegnati

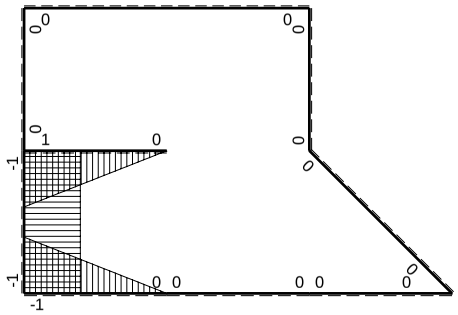

M_x flessione da iperstatica X=1

Quadro contributi PLV per iperstatica $X=W_{GA}$

→	$M_x(x)$	$M_0(x)$	M_xM_0	M_xM_x	$\int M_xM_0/EJdx$	$\int XM_xM_x/EJdx$
AB b	0	$-5/2Fb+3Fx-1/2qx^2$	0	0	0	0
BA b	0	$2Fx+1/2qx^2$	0	0		
BC b	0	2Fx	0	0	0	0
CB b	0	-2Fb+2Fx	0	0		
CD √2b	0	2Fb-√2Fx	0	0	0	0
DE b	0	0	0	0	0	0
ED b	0	0	0	0		
EF 2b	0	$-Fx+1/2qx^2$	0	0	0	0
FE 2b	0	$Fx-1/2qx^2$	0	0		
GA b	-1+x/b	-5/2Fx	$5/2Fx-5/2Fx^2/b$	$1-2x/b+x^2/b^2$	$5/12Fb^2/EJ$	1/3Xb/EJ
AG b	x/b	5/2Fb-5/2Fx	$5/2Fx-5/2Fx^2/b$	x^2/b^2		
FH b	0	-5/2Fx	0	0	0	0
HF b	0	5/2Fb-5/2Fx	0	0		
HI b	1-x/b	-5/2Fb+3/2Fx	$-5/2Fb+4Fx-3/2Fx^2/b$	$1-2x/b+x^2/b^2$	$-Fb^2/EJ$	1/3Xb/EJ
IH b	-x/b	Fb+3/2Fx	$-Fx-3/2Fx^2/b$	x^2/b^2		
HG b	-1	0	0	1	0	Xb/EJ
GH b	1	0	0	1		
HG	elongazione asta $N_{1HG}\varepsilon_{HG}L_{HG}$				$-Fb^2/EJ$	
A	molla nodo $-V_{1A}(V_{0A}+XV_{1A})/k_A$				$-11/8Fb^2/EJ$	1/4Xb/EJ
	totali				$-71/24Fb^2/EJ$	23/12Xb/EJ
	iperstatica $X=W_{GA}$				71/46Fb	

Sviluppi di calcolo iperstatica

$L^{XX}_{GA} = \int_o^b (1 - 2\,x/b + x^2/b^2)\ 1/EJ\ dx = [\,x - x^2/b + 1/3\,x^3/b^2\,]_o^b\ 1/EJ$

$= (\,b - b + 1/3\,b\,)\ 1/EJ\ = 1/3\ b/EJ$

$L^{XX}_{AG} = \int_o^b (\,x^2/b^2\,)\ 1/EJ\ dx = [1/3\,x^3/b^2\,]_o^b\ 1/EJ$

$= (1/3\,b\,)\ 1/EJ\ = 1/3\ b/EJ$

$L^{XX}_{HI} = \int_o^b (1 - 2\,x/b + x^2/b^2)\ 1/EJ\ dx = [\,x - x^2/b + 1/3\,x^3/b^2\,]_o^b\ 1/EJ$

$= (\,b - b + 1/3\,b\,)\ 1/EJ\ = 1/3\ b/EJ$

$L^{XX}_{IH} = \int_o^b (\,x^2/b^2\,)\ 1/EJ\ dx = [1/3\,x^3/b^2\,]_o^b\ 1/EJ$

$= (1/3\,b\,)\ 1/EJ\ = 1/3\ b/EJ$

$L^{XX}_{HG} = \int_o^b (1)\ 1/EJ\ dx = [\,x\,]_o^b\ 1/EJ$

$= (\,b\,)\ 1/EJ\ =\ b/EJ$

$L^{XX}_{GH} = \int_o^b (1)\ 1/EJ\ dx = [\,x\,]_o^b\ 1/EJ$

$= (\,b\,)\ 1/EJ\ =\ b/EJ$

$L^{Xo}_{GA} = \int_o^b (5/2\,x/b - 5/2\,x^2/b^2)\ Fb\ 1/EJ\ dx = [5/4\,x^2/b - 5/6\,x^3/b^2\,]_o^b\ Fb\ 1/EJ$

$= (5/4\,b - 5/6\,b\,)\ Fb\ 1/EJ\ = 5/12\ Fb^2/EJ$

$L^{Xo}_{AG} = \int_o^b (5/2\,x/b - 5/2\,x^2/b^2)\ Fb\ 1/EJ\ dx = [5/4\,x^2/b - 5/6\,x^3/b^2\,]_o^b\ Fb\ 1/EJ$

$= (5/4\,b - 5/6\,b\,)\ Fb\ 1/EJ\ = 5/12\ Fb^2/EJ$

$L^{Xo}_{HI} = \int_o^b (-5/2 + 4\,x/b - 3/2\,x^2/b^2)\ Fb\ 1/EJ\ dx = [-5/2\,x + 2\,x^2/b - 1/2\,x^3/b^2\,]_o^b\ Fb\ 1/EJ$

$= (-5/2\,b + 2\,b - 1/2\,b\,)\ Fb\ 1/EJ\ = -\ Fb^2/EJ$

$L^{Xo}_{IH} = \int_o^b (-\,x/b - 3/2\,x^2/b^2)\ Fb\ 1/EJ\ dx = [-1/2\,x^2/b - 1/2\,x^3/b^2\,]_o^b\ Fb\ 1/EJ$

$= (-1/2\,b - 1/2\,b\,)\ Fb\ 1/EJ\ = -\ Fb^2/EJ$

PROCEDIMENTO E RISULTATI Nome: ESΣ05.xxxx.215

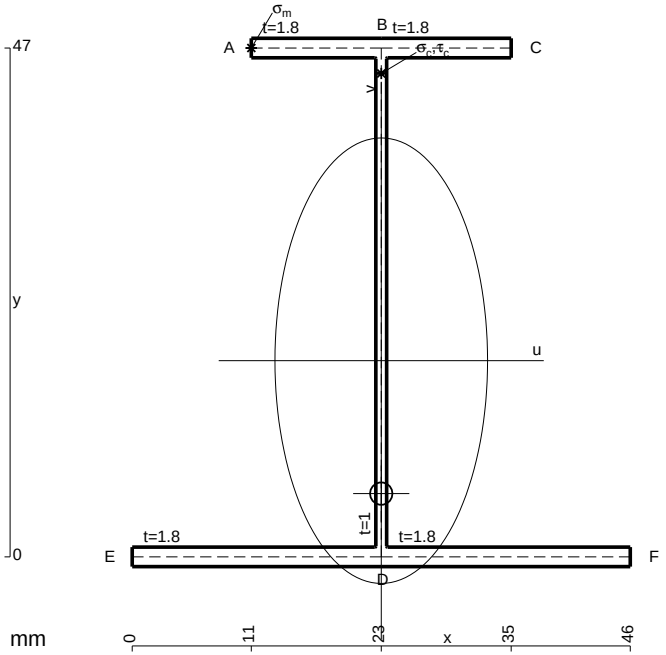

A = 173. mm^2
J_u = 73230. mm^4
J_v = 16674. mm^4
J_t = 151.7 mm^4
y_o = -12.28 mm
y_g = 18.12 mm
T_y = 990. N
M_x = -495000. Nmm
x_m = 11. mm
y_m = 47. mm
u_m = -12. mm
v_m = 28.88 mm
$\sigma_m = -Mv/J_u$ = 195.2 N/mm^2
x_c = 23. mm
y_c = 47. mm
v_c = 28.88 mm
$\sigma_c = -Mv/J_u$ = 195.2 N/mm^2
$\tau_c = TS^*/tJ_u$ = 16.87 N/mm^2
$\tau_g = TS^*/tJ_u$ = 16.87 N/mm^2
t_c = 330. mm
$\sigma_o = \sqrt{\sigma^2 + 3\tau^2}$ = 197.4 N/mm^2

@ Adolfo Zavelani Rossi, Politecnico di Milano, vers.27.03.13 01.12.25

ESΣ05.xxxx.215

@ Adolfo Zavelani Rossi, Politecnico di Milano, vers.27.03.13 01.12.25

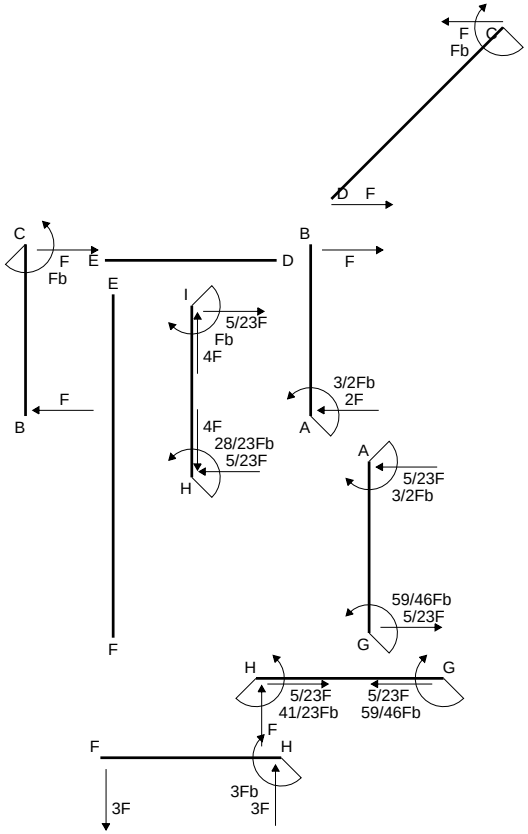
F
Fb
C
D
F
C
F
Fb
E
D
B
F
E
I
5/23F
Fb
4F
3/2Fb
2F
F
B
4F
28/23Fb
5/23F
A
H
A
5/23F
3/2Fb
59/46Fb
5/23F
G
F
H
G
5/23F
41/23Fb
5/23F
59/46Fb
F
F
H
3Fb
3F
3F

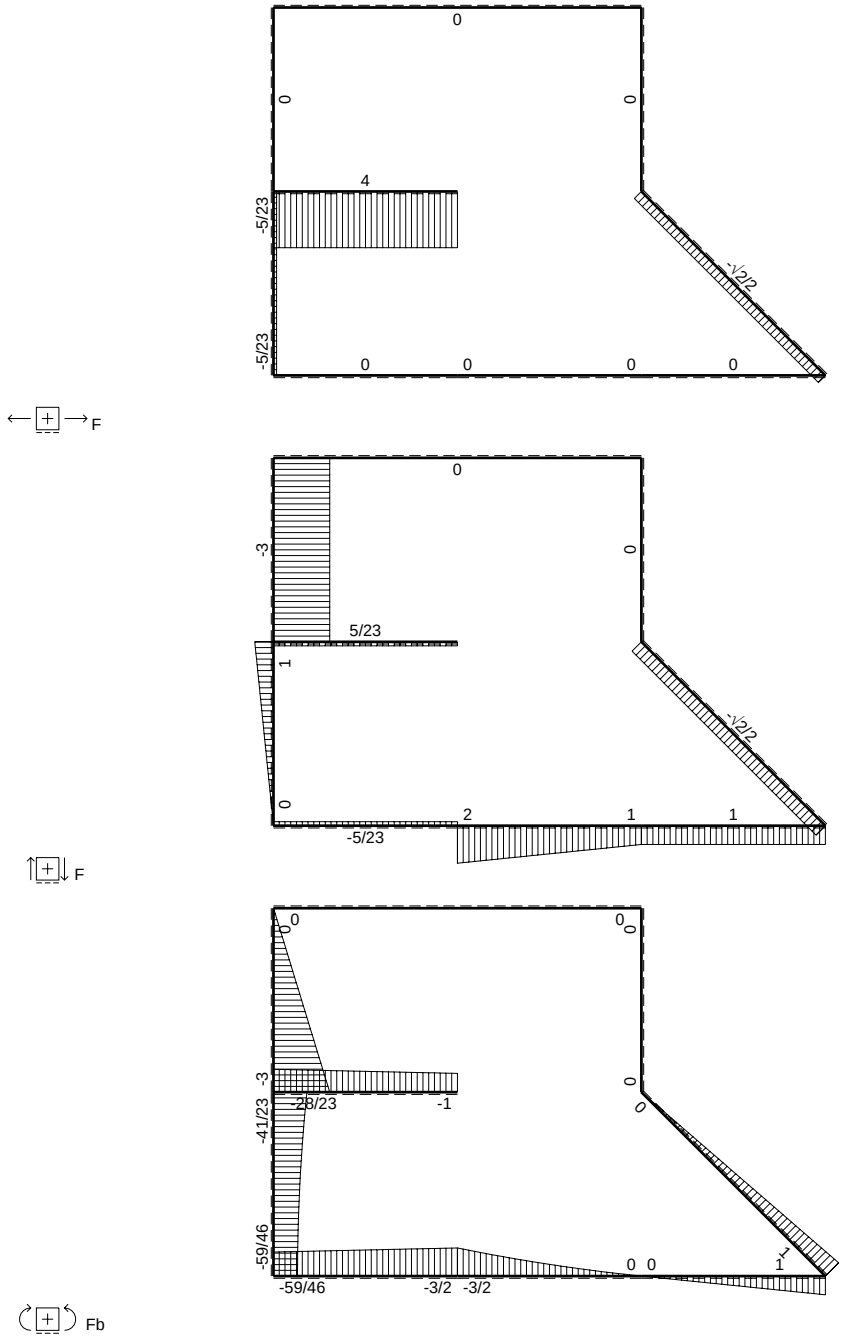
0
0
0
4
-5/23
-5/23
-√2/2
0
0
0
0
F
0
-3
0
5/23
1
-√2/2
0
2
1
1
-5/23
F
0
0
0
0
-3
-28/23
-1
0
-41/23
0
-59/46
0 0
1
-59/46
-3/2
-3/2
Fb

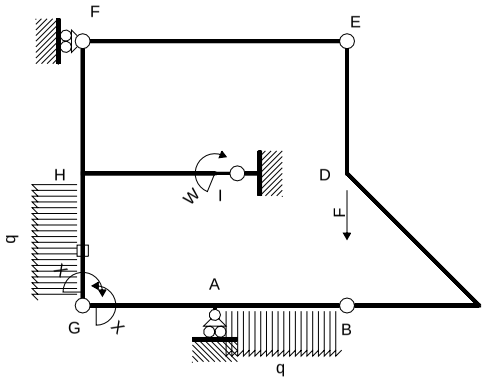

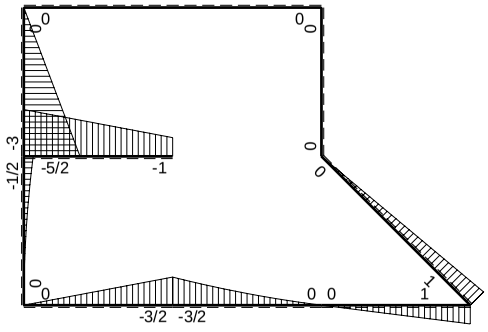

M_0 flessione da carichi assegnati

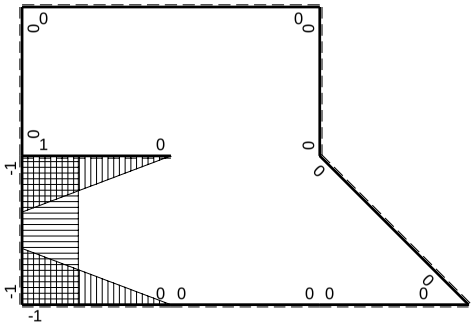

M_x flessione da iperstatica X=1

Quadro contributi PLV per iperstatica $X=W_{GA}$

→	$M_x(x)$	$M_0(x)$	M_xM_0	M_xM_x	$\int M_xM_0/EJdx$	$\int XM_xM_x/EJdx$
AB b	0	$-3/2Fb+2Fx-1/2qx^2$	0	0	0	0
BA b	0	$Fx+1/2qx^2$	0	0		
BC b	0	Fx	0	0	0	0
CB b	0	-Fb+Fx	0	0		
CD √2b	0	Fb-√2/2Fx	0	0	0	0
DE b	0	0	0	0	0	0
ED b	0	0	0	0		
EF 2b	0	0	0	0	0	0
FE 2b	0	0	0	0		
GA b	-1+x/b	-3/2Fx	$3/2Fx-3/2Fx^2/b$	$1-2x/b+x^2/b^2$	$1/4Fb^2/EJ$	1/3Xb/EJ
AG b	x/b	3/2Fb-3/2Fx	$3/2Fx-3/2Fx^2/b$	x^2/b^2		
FH b	0	-3Fx	0	0	0	0
HF b	0	3Fb-3Fx	0	0		
HI b	1-x/b	-5/2Fb+3/2Fx	$-5/2Fb+4Fx-3/2Fx^2/b$	$1-2x/b+x^2/b^2$	$-Fb^2/EJ$	1/3Xb/EJ
IH b	-x/b	Fb+3/2Fx	$-Fx-3/2Fx^2/b$	x^2/b^2		
HG b	-1	$-1/2Fb+Fx-1/2qx^2$	$1/2Fb-Fx+1/2Fx^2/b$	1	$1/6Fb^2/EJ$	Xb/EJ
GH b	1	$1/2qx^2$	$1/2Fx^2/b$	1		
HG	elongazione asta $N_{1HG}\varepsilon_{HG}L_{HG}$				$-Fb^2/EJ$	
A	molla nodo $-V_{1A}(V_{0A}+XV_{1A})/k_A$				$-7/8Fb^2/EJ$	1/4Xb/EJ
	totali				$-59/24Fb^2/EJ$	23/12Xb/EJ
	iperstatica $X=W_{GA}$				59/46Fb	

Sviluppi di calcolo iperstatica

$L^{XX}_{GA} = \int_o^b (1 - 2\,x/b + x^2/b^2)\ 1/EJ\ dx = [\,x - x^2/b + 1/3\,x^3/b^2\,]_o^b\ 1/EJ$

$= (\,b - b + 1/3\,b\,)\ 1/EJ = 1/3\ b/EJ$

$L^{XX}_{AG} = \int_o^b (\,x^2/b^2\,)\ 1/EJ\ dx = [1/3\,x^3/b^2\,]_o^b\ 1/EJ$

$= (1/3\,b\,)\ 1/EJ = 1/3\ b/EJ$

$L^{XX}_{HI} = \int_o^b (1 - 2\,x/b + x^2/b^2)\ 1/EJ\ dx = [\,x - x^2/b + 1/3\,x^3/b^2\,]_o^b\ 1/EJ$

$= (\,b - b + 1/3\,b\,)\ 1/EJ = 1/3\ b/EJ$

$L^{XX}_{IH} = \int_o^b (\,x^2/b^2\,)\ 1/EJ\ dx = [1/3\,x^3/b^2\,]_o^b\ 1/EJ$

$= (1/3\,b\,)\ 1/EJ = 1/3\ b/EJ$

$L^{XX}_{HG} = \int_o^b (1)\ 1/EJ\ dx = [\,x\,]_o^b\ 1/EJ$

$= (\,b\,)\ 1/EJ = b/EJ$

$L^{XX}_{GH} = \int_o^b (1)\ 1/EJ\ dx = [\,x\,]_o^b\ 1/EJ$

$= (\,b\,)\ 1/EJ = b/EJ$

$L^{Xo}_{GA} = \int_o^b (3/2\,x/b - 3/2\,x^2/b^2)\ Fb\ 1/EJ\ dx = [3/4\,x^2/b - 1/2\,x^3/b^2\,]_o^b\ Fb\ 1/EJ$

$= (3/4\,b - 1/2\,b\,)\ Fb\ 1/EJ = 1/4\ Fb^2/EJ$

$L^{Xo}_{AG} = \int_o^b (3/2\,x/b - 3/2\,x^2/b^2)\ Fb\ 1/EJ\ dx = [3/4\,x^2/b - 1/2\,x^3/b^2\,]_o^b\ Fb\ 1/EJ$

$= (3/4\,b - 1/2\,b\,)\ Fb\ 1/EJ = 1/4\ Fb^2/EJ$

$L^{Xo}_{HI} = \int_o^b (-5/2 + 4\,x/b - 3/2\,x^2/b^2)\ Fb\ 1/EJ\ dx = [-5/2\,x + 2\,x^2/b - 1/2\,x^3/b^2\,]_o^b\ Fb\ 1/EJ$

$= (-5/2\,b + 2\,b - 1/2\,b\,)\ Fb\ 1/EJ = -\ Fb^2/EJ$

$L^{Xo}_{IH} = \int_o^b (-\,x/b - 3/2\,x^2/b^2)\ Fb\ 1/EJ\ dx = [-1/2\,x^2/b - 1/2\,x^3/b^2\,]_o^b\ Fb\ 1/EJ$

$= (-1/2\,b - 1/2\,b\,)\ Fb\ 1/EJ = -\ Fb^2/EJ$

$L^{Xo}_{HG} = \int_o^b (1/2 - x/b + 1/2\,x^2/b^2)\ Fb\ 1/EJ\ dx - 1\ \ (-1)\ \ (-1)\ \ Fb^2/EJ$

$= [1/2\,x - 1/2\,x^2/b + 1/6\,x^3/b^2\,]_o^b\ Fb\ 1/EJ\ -\ 1\ \ (-1)\ \ (-1)\ \ Fb^2/EJ$

$= (1/2\,b - 1/2\,b + 1/6\,b\,)\ Fb\ 1/EJ\ -\ 1\ \ (-1)\ \ (-1)\ \ Fb^2/EJ = -5/6\ \ Fb^2/EJ$

$L^{Xo}_{GH} = \int_o^b (1/2\,x^2/b^2)\ Fb\ 1/EJ\ dx - 1\ \ (-1)\ \ (-1)\ \ Fb^2/EJ = [1/6\,x^3/b^2\,]_o^b\ Fb\ 1/EJ\ -\ 1\ \ (-1)\ \ (-1)\ \ Fb^2/EJ$

$= (1/6\,b\,)\ Fb\ 1/EJ\ -\ 1\ \ (-1)\ \ (-1)\ \ Fb^2/EJ = -5/6\ \ Fb^2/EJ$

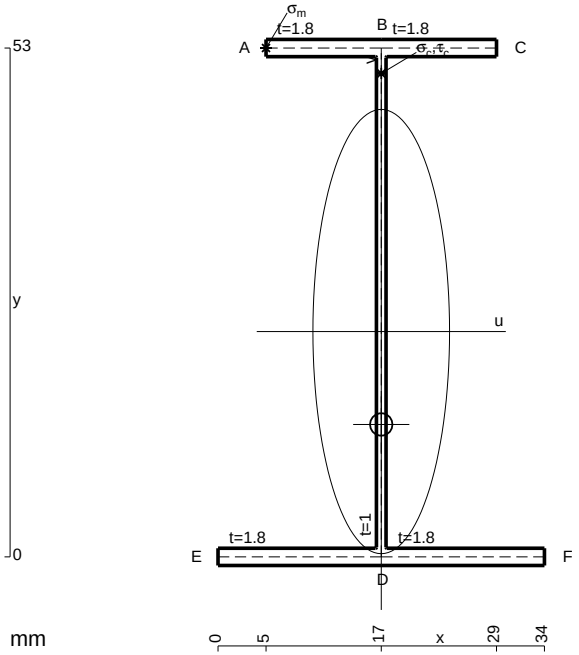

A = 157.4 mm^2
J_u = 84276. mm^4
J_v = 7969. mm^4
J_t = 130.4 mm^4
y_o = -9.679 mm
y_g = 23.47 mm
T_y = -810. N
M_x = -583200. Nmm
x_m = 5. mm
y_m = 53. mm
u_m = -12. mm
v_m = 29.53 mm
$\sigma_m = -Mv/J_u$ = 204.4 N/mm^2
x_c = 17. mm
y_c = 53. mm
v_c = 29.53 mm
$\sigma_c = -Mv/J_u$ = 204.4 N/mm^2
$\tau_c = TS^*/tJ_u$ = 12.26 N/mm^2
$\tau_g = TS^*/tJ_u$ = 12.26 N/mm^2
t_c = 270. mm
$\sigma_o = \sqrt{\sigma^2 + 3\tau^2}$ = 205.5 N/mm^2

ESΣ05.xxxx.216

@ Adolfo Zavelani Rossi, Politecnico di Milano, vers.27.03.13 01.12.25

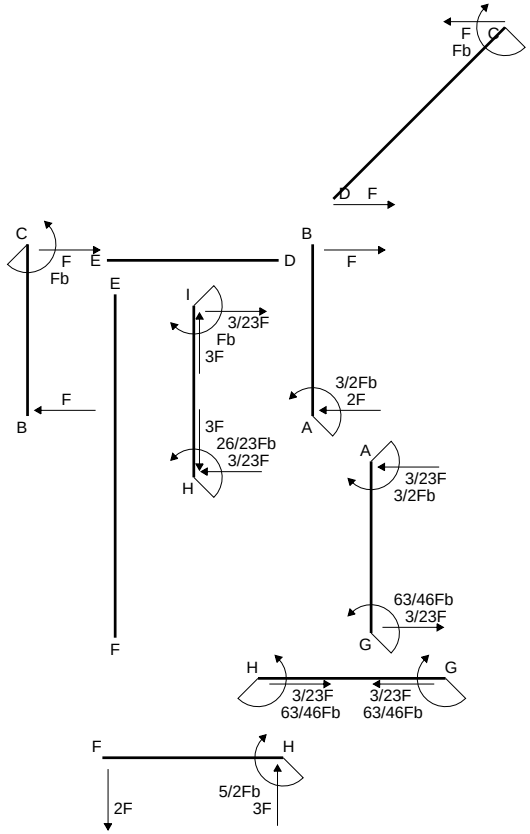
F
Fb
C
D
F
C
F
Fb
E
D
B
F
E
I
3/23F
Fb
3F
3/2Fb
2F
F
B
3F
26/23Fb
3/23F
A
H
A
3/23F
3/2Fb
63/46Fb
3/23F
G
F
H
G
3/23F
63/46Fb
3/23F
63/46Fb
F
H
5/2Fb
3F
2F

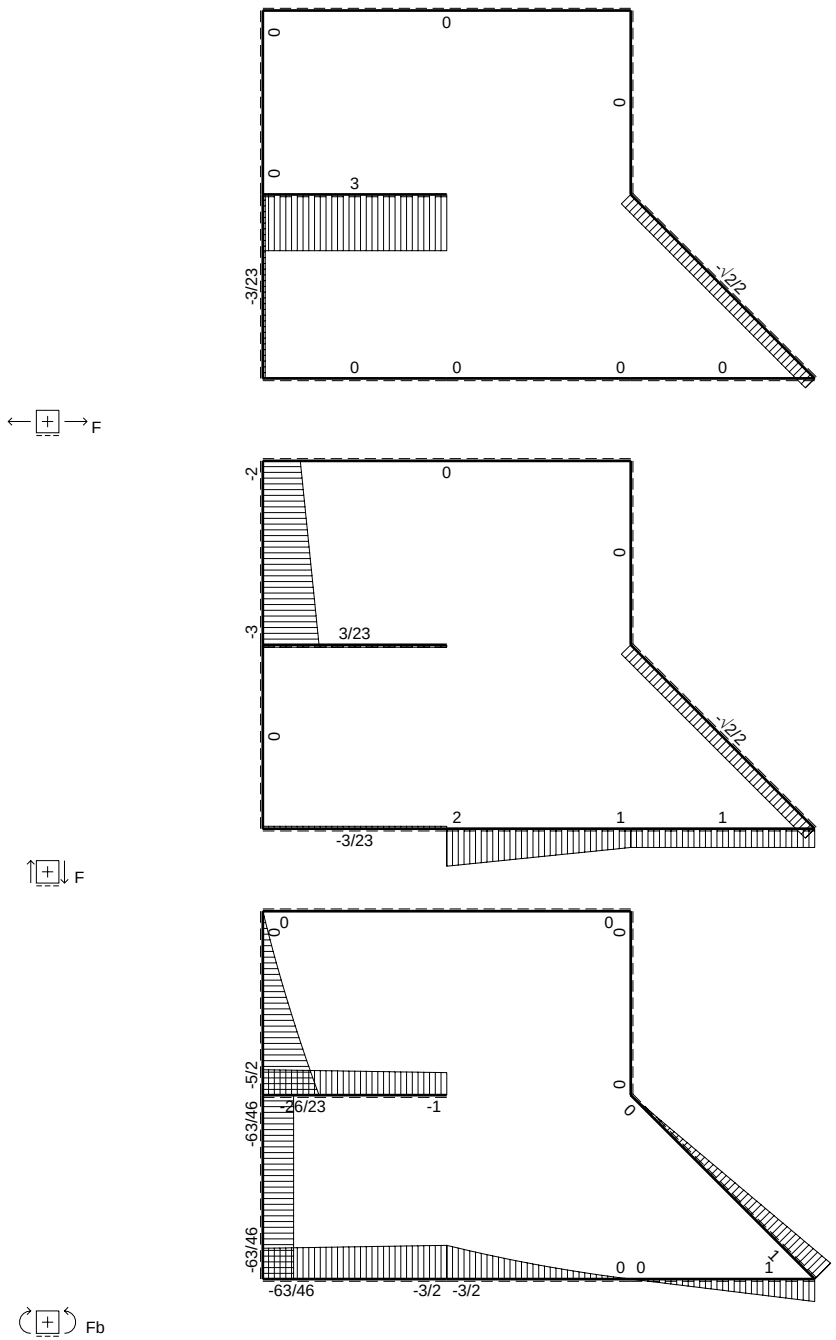
0
0
0
0
3
-3/23
-√2/2
0
0
0
0
F
-2
0
0
-3
3/23
0
-√2/2
2
1
1
-3/23
F
0
0
0
0
-5/2
-26/23
-1
0
0
-63/46
-63/46
0
0
1
-63/46
-3/2
-3/2
Fb

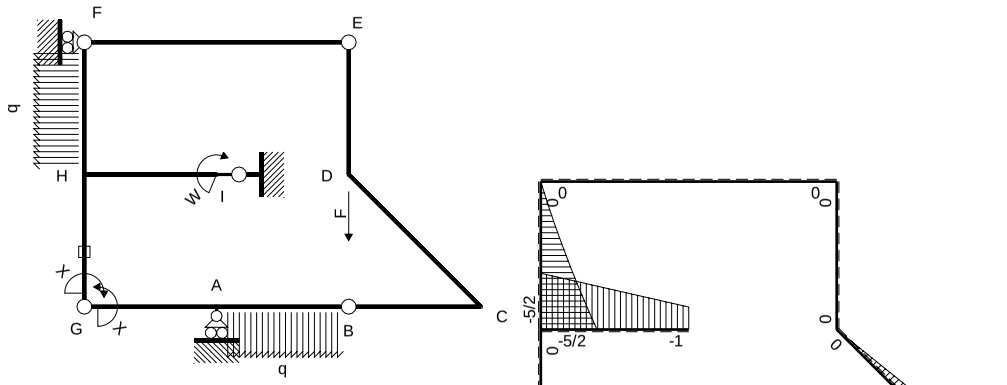

M_0 flessione da carichi assegnati

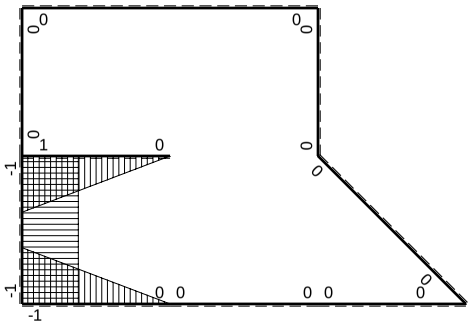

M_x flessione da iperstatica X=1

Quadro contributi PLV per iperstatica $X=W_{GA}$

→	$M_x(x)$	$M_0(x)$	M_xM_0	M_xM_x	$\int M_xM_0/EJdx$	$\int XM_xM_x/EJdx$
AB b	0	$-3/2Fb+2Fx-1/2qx^2$	0	0	0	0
BA b	0	$Fx+1/2qx^2$	0	0		
BC b	0	Fx	0	0	0	0
CB b	0	-Fb+Fx	0	0		
CD √2b	0	Fb-√2/2Fx	0	0	0	0
DE b	0	0	0	0	0	0
ED b	0	0	0	0		
EF 2b	0	0	0	0	0	0
FE 2b	0	0	0	0		
GA b	-1+x/b	-3/2Fx	$3/2Fx-3/2Fx^2/b$	$1-2x/b+x^2/b^2$	$1/4Fb^2/EJ$	1/3Xb/EJ
AG b	x/b	3/2Fb-3/2Fx	$3/2Fx-3/2Fx^2/b$	x^2/b^2		
FH b	0	$-2Fx-1/2qx^2$	0	0	0	0
HF b	0	$5/2Fb-3Fx+1/2qx^2$	0	0		
HI b	1-x/b	-5/2Fb+3/2Fx	$-5/2Fb+4Fx-3/2Fx^2/b$	$1-2x/b+x^2/b^2$	$-Fb^2/EJ$	1/3Xb/EJ
IH b	-x/b	Fb+3/2Fx	$-Fx-3/2Fx^2/b$	x^2/b^2		
HG b	-1	0	0	1	0	Xb/EJ
GH b	1	0	0	1		
HG	elongazione asta $N_{1HG}\varepsilon_{HG}L_{HG}$				$-Fb^2/EJ$	
A	molla nodo $-V_{1A}(V_{0A}+XV_{1A})/k_A$				$-7/8Fb^2/EJ$	1/4Xb/EJ
	totali				$-21/8Fb^2/EJ$	23/12Xb/EJ
	iperstatica $X=W_{GA}$				63/46Fb	

Sviluppi di calcolo iperstatica

$L^{XX}_{GA} = \int_o^b (1 - 2\,x/b + x^2/b^2)\ 1/EJ\ dx = [\,x - x^2/b + 1/3\,x^3/b^2\,]_o^b\ 1/EJ$

$= (\,b - b + 1/3\,b\,)\ 1/EJ\ = 1/3\ b/EJ$

$L^{XX}_{AG} = \int_o^b (\,x^2/b^2\,)\ 1/EJ\ dx = [1/3\,x^3/b^2\,]_o^b\ 1/EJ$

$= (1/3\,b\,)\ 1/EJ\ = 1/3\ b/EJ$

$L^{XX}_{HI} = \int_o^b (1 - 2\,x/b + x^2/b^2)\ 1/EJ\ dx = [\,x - x^2/b + 1/3\,x^3/b^2\,]_o^b\ 1/EJ$

$= (\,b - b + 1/3\,b\,)\ 1/EJ\ = 1/3\ b/EJ$

$L^{XX}_{IH} = \int_o^b (\,x^2/b^2\,)\ 1/EJ\ dx = [1/3\,x^3/b^2\,]_o^b\ 1/EJ$

$= (1/3\,b\,)\ 1/EJ\ = 1/3\ b/EJ$

$L^{XX}_{HG} = \int_o^b (1)\ 1/EJ\ dx = [\,x\,]_o^b\ 1/EJ$

$= (\,b\,)\ 1/EJ\ =\ b/EJ$

$L^{XX}_{GH} = \int_o^b (1)\ 1/EJ\ dx = [\,x\,]_o^b\ 1/EJ$

$= (\,b\,)\ 1/EJ\ =\ b/EJ$

$L^{Xo}_{GA} = \int_o^b (3/2\,x/b - 3/2\,x^2/b^2)\ Fb\ 1/EJ\ dx = [3/4\,x^2/b - 1/2\,x^3/b^2\,]_o^b\ Fb\ 1/EJ$

$= (3/4\,b - 1/2\,b\,)\ Fb\ 1/EJ\ = 1/4\ Fb^2/EJ$

$L^{Xo}_{AG} = \int_o^b (3/2\,x/b - 3/2\,x^2/b^2)\ Fb\ 1/EJ\ dx = [3/4\,x^2/b - 1/2\,x^3/b^2\,]_o^b\ Fb\ 1/EJ$

$= (3/4\,b - 1/2\,b\,)\ Fb\ 1/EJ\ = 1/4\ Fb^2/EJ$

$L^{Xo}_{HI} = \int_o^b (-5/2 + 4\,x/b - 3/2\,x^2/b^2)\ Fb\ 1/EJ\ dx = [-5/2\,x + 2\,x^2/b - 1/2\,x^3/b^2\,]_o^b\ Fb\ 1/EJ$

$= (-5/2\,b + 2\,b - 1/2\,b\,)\ Fb\ 1/EJ\ = -\ Fb^2/EJ$

$L^{Xo}_{IH} = \int_o^b (-\,x/b - 3/2\,x^2/b^2)\ Fb\ 1/EJ\ dx = [-1/2\,x^2/b - 1/2\,x^3/b^2\,]_o^b\ Fb\ 1/EJ$

$= (-1/2\,b - 1/2\,b\,)\ Fb\ 1/EJ\ = -\ Fb^2/EJ$

PROCEDIMENTO E RISULTATI Nome: ESΣ05.xxxx.217

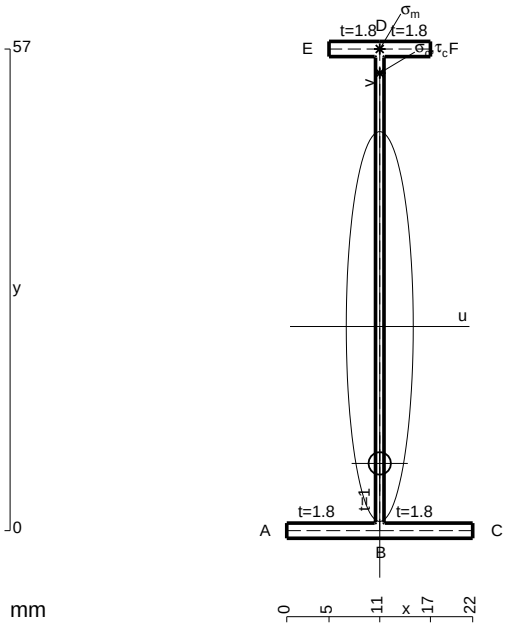

A = 118.2 mm^2
J_u = 62916. mm^4
J_v = 1856. mm^4
J_t = 85.1 mm^4
y_o = -16.2 mm
y_g = 24.16 mm
T_y = -600. N
M_x = -415000. Nmm
x_m = 11. mm
y_m = 57. mm
v_m = 32.84 mm
$\sigma_m = -Mv/J_u$ = 216.6 N/mm^2
y_c = 2. mm
u_c = -11. mm
v_c = -22.16 mm
$\sigma_c = -Mv/J_u$ = 216.6 N/mm^2
$\tau_c = TS^*/tJ_u$ = 6.765 N/mm^2
$\tau_g = TS^*/tJ_u$ = 6.765 N/mm^2
t_c = 200. mm
$\sigma_o = \sqrt{\sigma^2 + 3\tau^2}$ = 216.9 N/mm^2

@ Adolfo Zavelani Rossi, Politecnico di Milano, vers.27.03.13 01.12.25

ESΣ05.xxxx.217

@ Adolfo Zavelani Rossi, Politecnico di Milano, vers.27.03.13 01.12.25